DIST.	COUNTY	ROUTE	KILOMETER POST TOTAL PROJECT	SHEET NO.	TOTAL SHEETS
04	SF	80	13.2/13.9	640SIRI	1204

REGISTERED ENGINEER - CIVIL

05-20-11

PLANS APPROVAL DATE

The State of California or its officers or agents shall not be responsible for the accuracy or completeness of electronic copies of this plan sheet.

REGISTERED PROFESSIONAL ENGINEER Marwan N. Nader No. C 054426 Exp. 12/31/11 CIVIL STATE OF CALIFORNIA

T.Y. LIN / MOFFATT & NICHOL
825 BATTERY STREET
SAN FRANCISCO, CA 94111

Caltrans now has a web site! To get to the web site, go to: http://www.dot.ca.gov

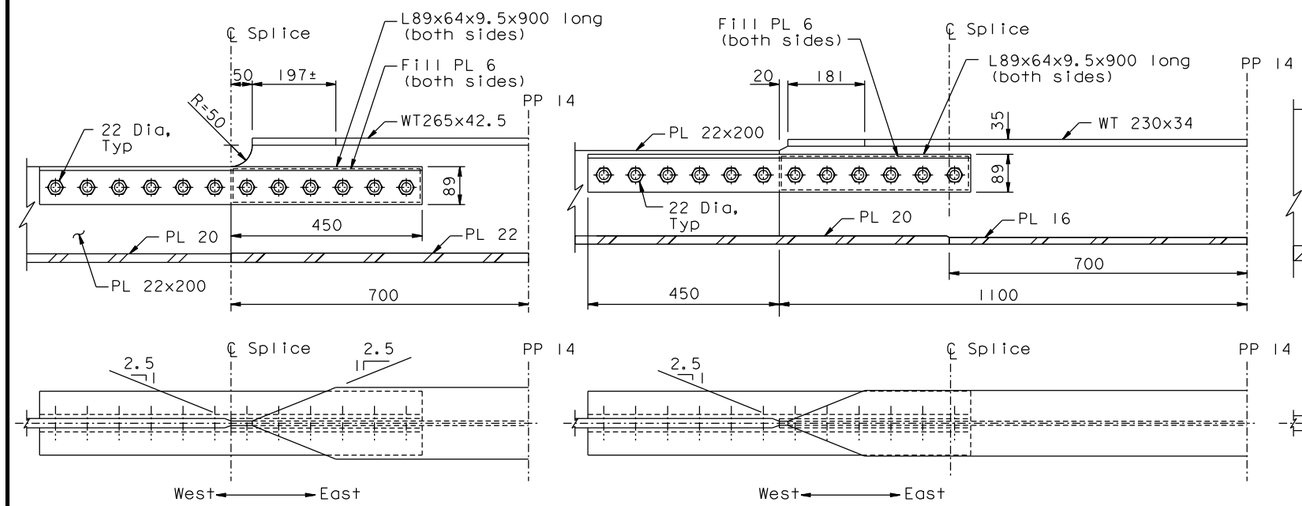

PP 14 SKIN PLATE 5

PP 14 SKIN PLATE 7

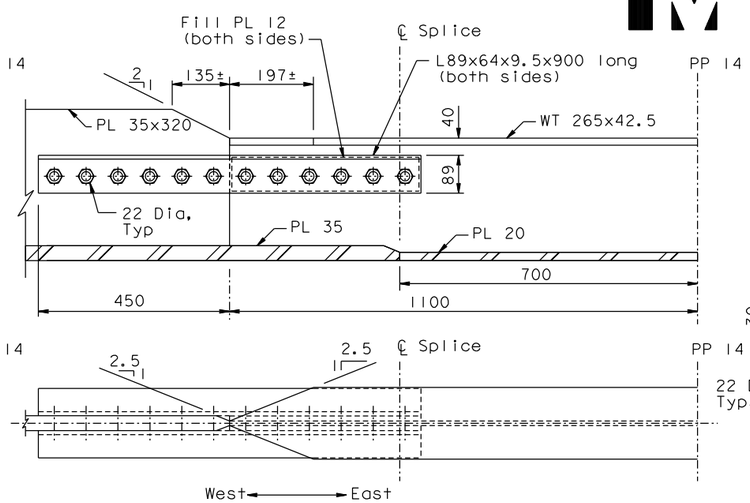

PP 14 SKIN PLATE 6

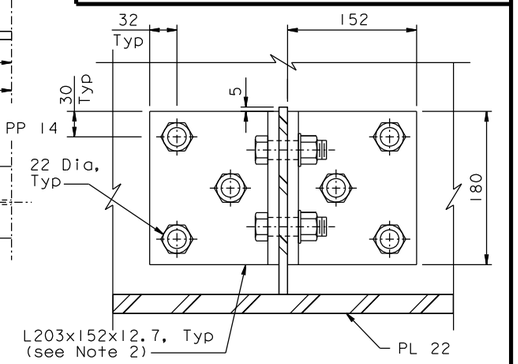

SECTION A-A

1:3.5

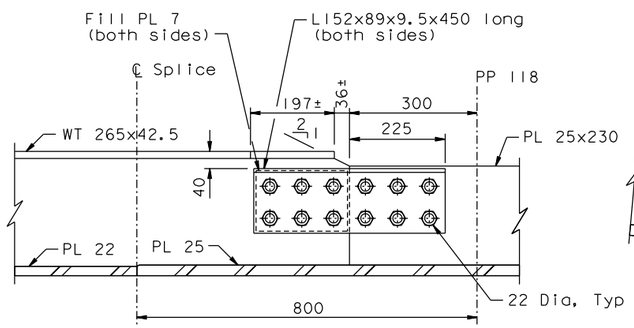

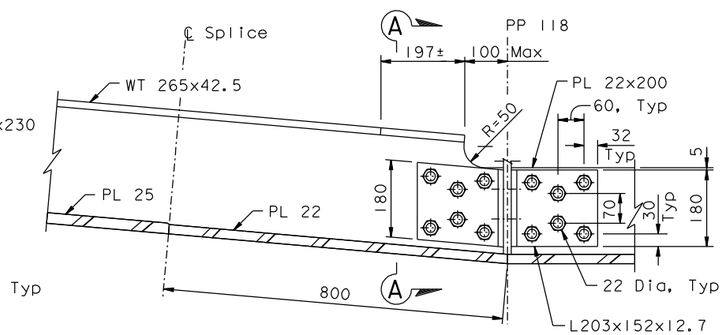

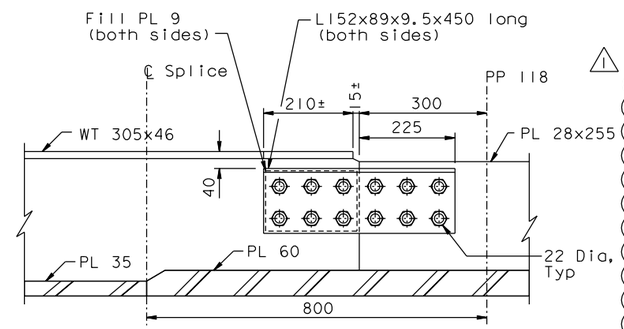

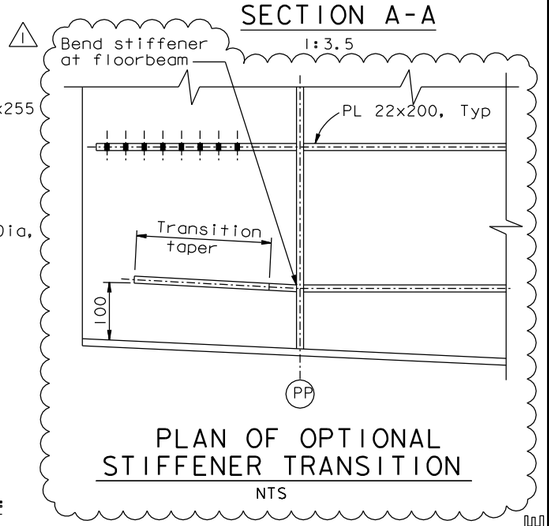

PLAN OF OPTIONAL STIFFENER TRANSITION

NTS

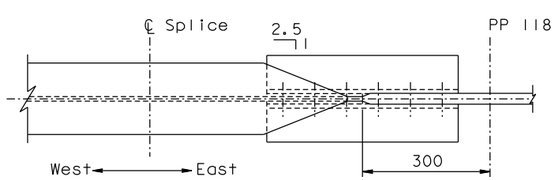

PP 118 SKIN PLATE 5

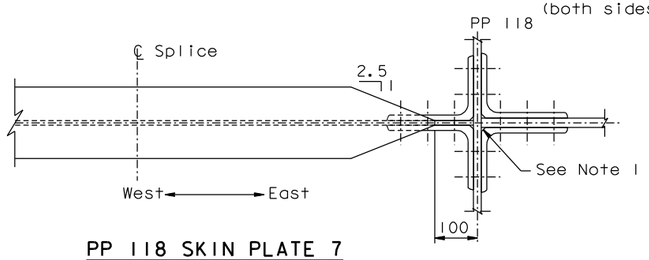

PP 118 SKIN PLATE 7

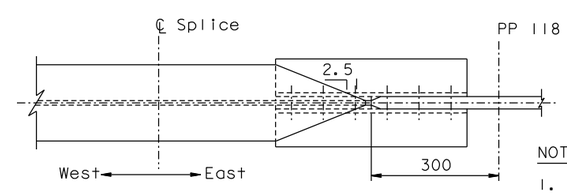

PP 118 SKIN PLATE 6

NOTES:

1. The L203x152x19, shall be chamfered 10 mm x 10 mm to provide access for the stiffener to web CJP.
2. For the two Type 7 stiffeners adjacent to Line E14, the 152 leg of the angle shall be trimmed to 115 where necessary. For the stiffener parallel to Line E14, the angles shall be bent.
3. Bolt spacing may be reduced to 2.75d where necessary.
4. All bolts shall be ASTM A325.

STIFFENER TRANSITION DETAILS @ PP14 & PP118

NTS

CONTRACT CHANGE ORDER NO. _____
SHEET ____ OF ____

REQUESTS FOR INFORMATION NOT ADDRESSED IN THIS CCO REMAIN IN FORCE

ALL DIMENSIONS ARE IN MILLIMETERS UNLESS OTHERWISE SHOWN

R. Valizadeh/V. Toan/Y.L./W.L./F.C.
DESIGN OVERSIGHT
SIGN OFF DATE 09/01/11

MARK	DATE	DESCRIPTIONS	BY	CH'D	CCO#
1	09/01/11	EAST END OBG	DT	MN	87
0	05/20/11	STIFFENER TRANSITIONS AT PP14 & PP118	DT	GB	204

REVISIONS

	BY	CHECKED
DESIGN	D. Turner	G. Baker
DETAILS	D. Turner	G. Baker
QUANTITIES	D. Turner	G. Baker

PREPARED FOR THE STATE OF CALIFORNIA DEPARTMENT OF TRANSPORTATION

R. Manzanarez
PROJECT ENGINEER

BRIDGE NO. 34-0006L/R
KILOMETER POST 13.2/13.9

SAN FRANCISCO OAKLAND BAY BRIDGE
EAST SPAN SEISMIC SAFETY PROJECT
SELF-ANCHORED SUSPENSION BRIDGE
(SUPERSTRUCTURE & TOWER)

TYPICAL GIRDER DETAILS NO. 16A

Rev. Date: 5-18-98

ORIGINAL SCALE IN MILLIMETERS FOR REDUCED PLANS 0 10 20 30 40 50 60 70 80 90 100

CU 04
EA 0120F1

DISREGARD PRINTS BEARING EARLIER REVISION DATES 05/20/11

REVISION DATES (PRELIMINARY STAGE ONLY)

SHEET 223SIRI OF

FILE => I:\bb\04-012001\sas\contract plans and cco\cco\cco#87\1-original 09-01-11\dgn\agdkd06s.dgn

100 % PS&E

DATE PLOTTED => 30 AUG 2011 TIME PLOTTED => 11:27:35

USERNAME => PTom