DIST.	COUNTY	ROUTE	KILOMETER POST TOTAL PROJECT	SHEET NO.	TOTAL SHEETS
04	SF	80	13.2/13.9	640R1	1204

Caltrans Metric

George Baker
REGISTERED ENGINEER - CIVIL
12-6-04
PLANS APPROVAL DATE

REGISTERED PROFESSIONAL ENGINEER George S. Baker No. C57112 Exp. 12/31/05 CIVIL STATE OF CALIFORNIA

The State of California or its officers or agents shall not be responsible for the accuracy or completeness of electronic copies of this plan sheet.

T.Y. LIN / MOFFATT & NICHOL
825 BATTERY STREET
SAN FRANCISCO, CA 94111

Caltrans now has a web site! To get to the web site, go to: http://www.dot.ca.gov

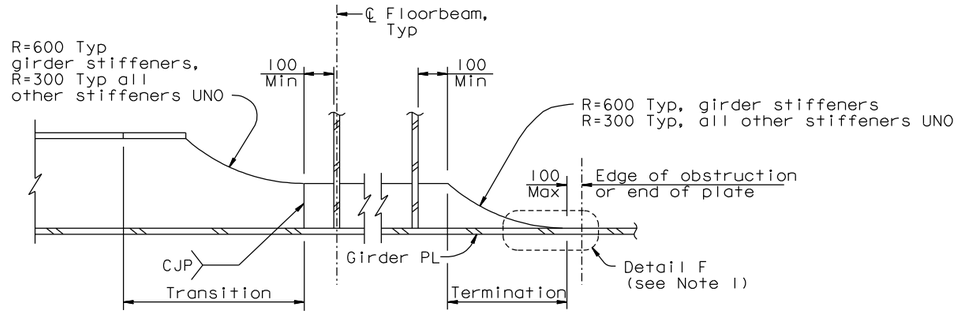

SECTION A-A

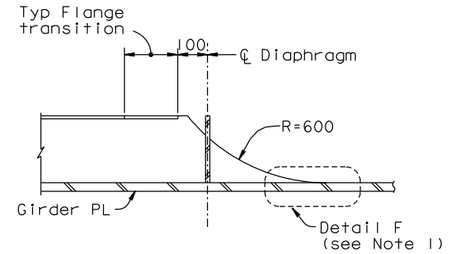

SECTION B-B

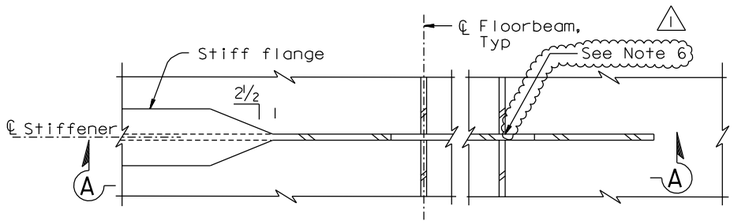

PLAN VIEW

TYPICAL STIFFENER TRANSITION AND TERMINATION
1:10

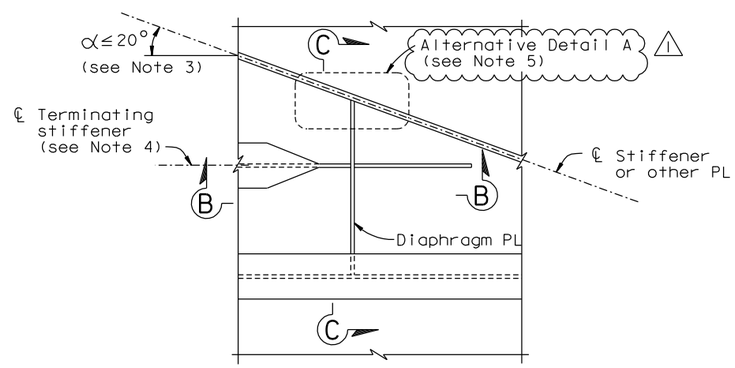

PLAN VIEW

STIFFENER TRANSITION AT GIRDER TRANSITION
1:10

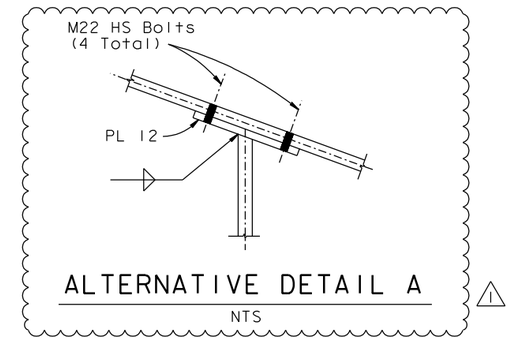

ALTERNATIVE DETAIL A
NTS

1

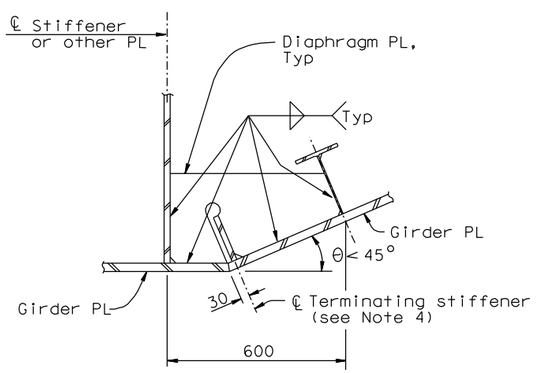

FOR θ<45 °

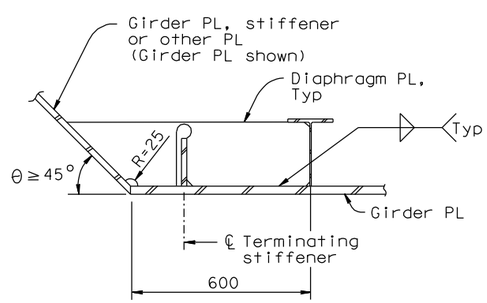

FOR 45 °≤ θ ≤90 °

SECTION C-C
1:10

NOTES:

1. For Detail F, see "Typical Floorbeam Details No.4" sheet.
2. These details apply to WT and PL type stiffeners.
3. Angle varies, see "Girder At East Transition" sheets.
4. For penetration of diaphragm PL, use stiffener details "Typical Girder Details No.5" sheet.
5. At the Contractor's option, alternative Detail A may be used in lieu of fillet welds between the diaphragm and the stiffener webs. This detail may be used at either or both ends of the diaphragm. (1)
6. For "Plan of Optional Stiffener Transition", see "Typical Girder Details No.16A" sheet.

100% PS&E

STIFFENER DETAILS

Daniel J. Turner
REGISTERED PROFESSIONAL ENGINEER Daniel J. Turner No. C 65033 Exp. 06/30/13 CIVIL STATE OF CALIFORNIA
FOR REVISIONS ONLY

CONTRACT CHANGE ORDER NO. _____
SHEET ___ OF ___

REQUESTS FOR INFORMATION NOT ADDRESSED IN THIS CCO REMAIN IN FORCE

ALL DIMENSIONS ARE IN MILLIMETERS UNLESS OTHERWISE SHOWN

R. Valizadeh/V. Toan/Y.L./W.L./F.C.
DESIGN OVERSIGHT
Roya Valizadeh / Vong Toan / Y. Liu
SIGN OFF DATE 09/01/11

MARK	DATE	DESCRIPTIONS	BY	CH'D	CCO#
1	09/01/11	EAST END OBG	DT	GB	87

REVISIONS

DESIGN	BY	G. Baker	CHECKED	P. Ritchie
DETAILS	BY	D. Veytsman	CHECKED	T. McMeans
QUANTITIES	BY	G. Baker	CHECKED	M. Roberts

PREPARED FOR THE STATE OF CALIFORNIA DEPARTMENT OF TRANSPORTATION

R. Manzanarez
PROJECT ENGINEER

BRIDGE NO. 34-0006L/R
KILOMETER POST 13.2/13.9

SAN FRANCISCO OAKLAND BAY BRIDGE
EAST SPAN SEISMIC SAFETY PROJECT
SELF-ANCHORED SUSPENSION BRIDGE
(SUPERSTRUCTURE & TOWER)

TYPICAL GIRDER DETAILS NO. 16

Rev. Date: 5-18-98

ORIGINAL SCALE IN MILLIMETERS FOR REDUCED PLANS 0 10 20 30 40 50 60 70 80 90 100

CU 04
EA 0120F1

DISREGARD PRINTS BEARING EARLIER REVISION DATES

REVISION DATES (PRELIMINARY STAGE ONLY) 08/27/99 05/31/01 04/08/02 07/01/02 12/19/02

SHEET 223R1 OF

FILE => I:\bb\04-012001\sas\contract plans and cco\cco\cco#87\1-original 09-01-11\dgn\agdkd06f.dgn

USERNAME => PTom DATE PLOTTED => 30 AUG 2011 TIME PLOTTED => 11:16:11