DIST.	COUNTY	ROUTE	KILOMETER POST TOTAL PROJECT	SHEET NO.	TOTAL SHEETS
04	SF	80	13.2/13.9	635S1	1204

Caltrans Metric

REGISTERED ENGINEER - CIVIL

04-18-12
PLANS APPROVAL DATE

REGISTERED PROFESSIONAL ENGINEER Marwan N. Nader No. C 054426 Exp. 12/31/13 CIVIL STATE OF CALIFORNIA

The State of California or its officers or agents shall not be responsible for the accuracy or completeness of electronic copies of this plan sheet.

T.Y. LIN / MOFFATT & NICHOL
825 BATTERY STREET
SAN FRANCISCO, CA 94111

Caltrans now has a web site! To get to the web site, go to: http://www.dot.ca.gov

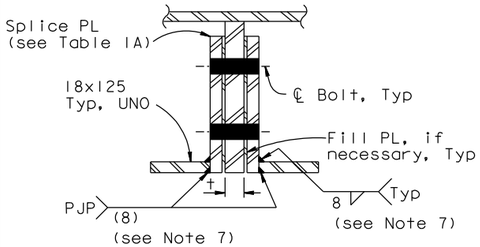

OPTIONAL SECTION C-C @ KINKS (See Note 1)

1:5

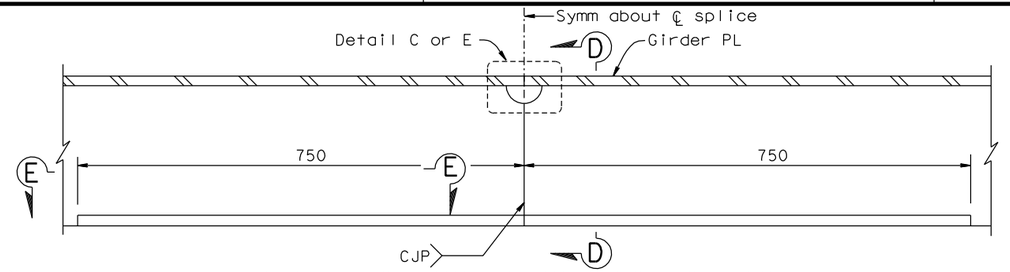

OPTIONAL PLATE STIFFENER SPLICE AT KINKS FOR RIBS TYPE 2 AND 10 (See Note 1)

1:5

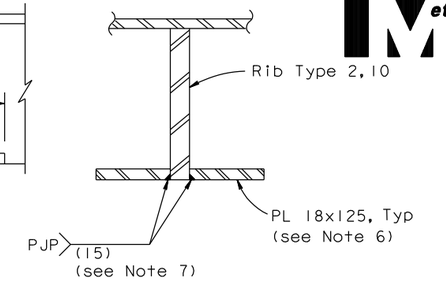

SECTION D-D

1:5

STIFFENER SPLICE @ KINKS					
PLATE STIFFENER THICKNESS t	SPLICE PLATE			HS BOLT	
	PLATE SIZE	FLANGE PLATE (See Note 5)	L	N	SIZE
16 x 140	14 x 100	18 x 100	715	9	M24
18 x 155	14 x 140	18 x 65	785	13	M24
20 x 180	18 x 165	18 x 125	685	16	M24
22 x 200	18 x 185	18 x 125	720	16	M27
25 x 230	18 x 215	18 x 125	785	18	M27
22 x 185	20 x 170	18 x 125	785	15	M27
25 x 200	20 x 185	18 x 125	785	18	M27
28 x 220	20 x 200	18 x 125	785	18	M27
28 x 240	20 x 225	18 x 125	785	18	M27
28 x 255	20 x 245	25 x 125	785	20	M27
28 x 300	20 x 275	18 x 125	785	22	M27

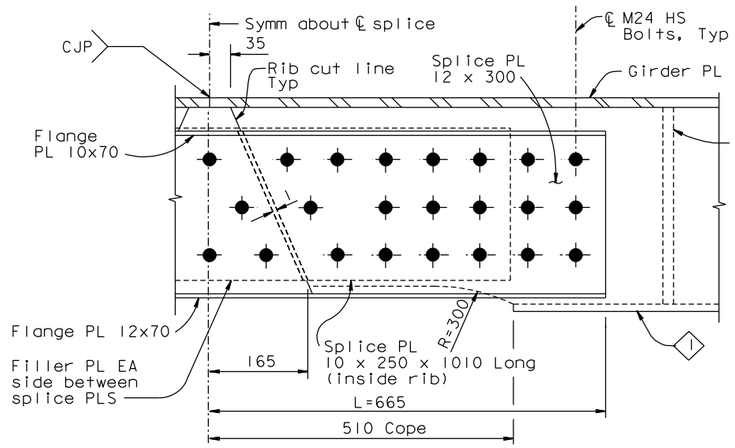

ALTERNATIVE SPLICE DETAIL NO. 1 AT RIB STIFFENER TYPE 1

1:5

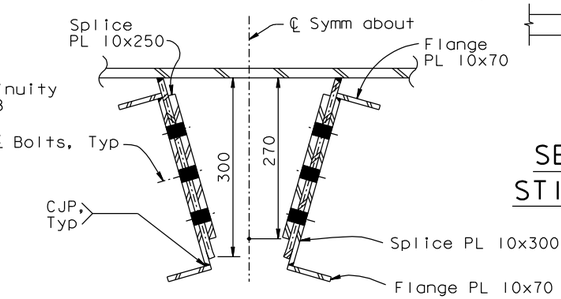

SECTION A'-A'

1:5

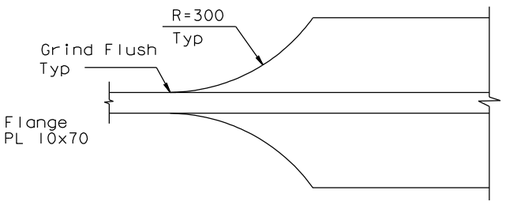

SECTION E-E TYPICAL STIFFENER TERMINATION

1:5

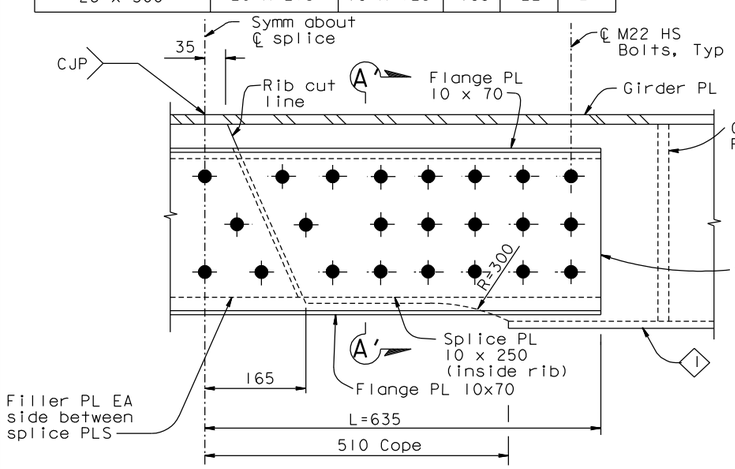

BOLTED TYPE CONNECTION GIRDER SPLICE DETAIL AT RIB STIFFENER TYPE 1 AT KINK

1:5

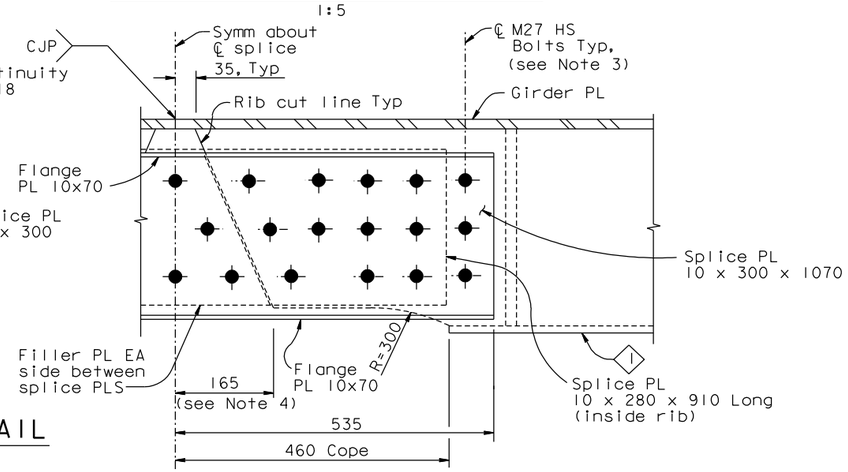

ALTERNATIVE SPLICE DETAIL NO. 2 AT RIB STIFFENER TYPE 1

1:5

NOTES:

1. For stiffeners indicated as curved on the Plans, the Contractor may elect to fabricate the ribs as straight segments, subject to review and approval of the Engineer. Rib kinks shall be placed within 50 mm of a floorbeam web or at segment splices. For ribs kinked at a segment splice, reinforcing flanges shall be provided as shown. This reinforcing shall be required for kinks greater than 0.0015 radians in open ribs or 0.005 radians in closed ribs, or as approved by the Engineer.
2. At the Contractor's option, "Alternative Splice Detail No.1" or "Alternative Splice Detail No.2" may be used between PP127 and PP127.5, subject to review and approval of the Engineer.
3. Minimum bolt edge distance: 48 mm.
   Minimum bolt spacing: 82 mm.
4. Dimensions may be reduced by up to 20 mm to accommodate tight space.
5. Flange PL 25x100 may be used in lieu of PL 18x125.
6. Reinforcing flanges shall be ASTM A709M HPS Grade 485W.
7. At the Contractor's option, the web to flange web may be a 12 mm effective PJP, subject to review and approval of the Engineer.

CONTRACT CHANGE ORDER NO. ____
SHEET ___ OF ___

REQUESTS FOR INFORMATION NOT ADDRESSED IN THIS CCO REMAIN IN FORCE

ALL DIMENSIONS ARE IN MILLIMETERS UNLESS OTHERWISE SHOWN

100% PS&E

DATE PLOTTED => 18 APR 2012 TIME PLOTTED => 11:03:31

R. Valizadeh/V. Toan/Y.L./W.L./F.C.
DESIGN OVERSIGHT
SIGN OFF DATE 04/18/12

MARK	DATE	DESCRIPTIONS	BY	CH'D	CCO#
0	04/18/12	EAST END OBG	GB	MN	87

REVISIONS

DESIGN	BY G. Baker	CHECKED M. Nader	
DETAILS	BY G. Baker	CHECKED D. Turner	
QUANTITIES	BY G. Baker	CHECKED D. Turner	

PREPARED FOR THE STATE OF CALIFORNIA DEPARTMENT OF TRANSPORTATION

R. Manzanarez
PROJECT ENGINEER

BRIDGE NO. 34-0006L/R
KILOMETER POST 13.2/13.9

SAN FRANCISCO OAKLAND BAY BRIDGE
EAST SPAN SEISMIC SAFETY PROJECT
SELF-ANCHORED SUSPENSION BRIDGE
(SUPERSTRUCTURE & TOWER)

TYPICAL GIRDER DETAILS NO. 11A

Rev. Date: 5-18-98

ORIGINAL SCALE IN MILLIMETERS FOR REDUCED PLANS 0 10 20 30 40 50 60 70 80 90 100

CU 04
EA 0120F1

DISREGARD PRINTS BEARING EARLIER REVISION DATES

REVISION DATES (PRELIMINARY STAGE ONLY) 04/18/12

SHEET 218S1 OF

FILE => I:\bb\04-012001\sas\contract plans and cco\cco\cco#87\temp\agdkd06h.dgn

USERNAME => DWinrow