DIST.	COUNTY	ROUTE	KILOMETER POST TOTAL PROJECT	SHEET NO.	TOTAL SHEETS
04	SF	80	13.2/13.9	634R1	1204

George Baker
REGISTERED ENGINEER - CIVIL
12-6-04
PLANS APPROVAL DATE

REGISTERED PROFESSIONAL ENGINEER George S. Baker No. C57112 Exp. 12/31/05 CIVIL STATE OF CALIFORNIA

The State of California or its officers or agents shall not be responsible for the accuracy or completeness of electronic copies of this plan sheet.

T.Y. LIN / MOFFATT & NICHOL
825 BATTERY STREET
SAN FRANCISCO, CA 94111

Caltrans now has a web site! To get to the web site, go to: http://www.dot.ca.gov

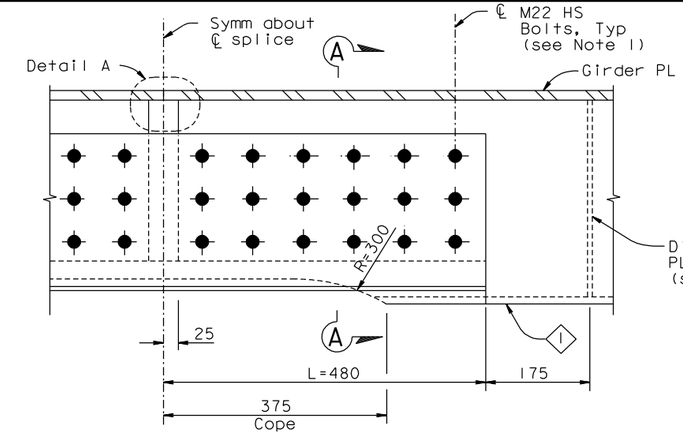

AT RIB STIFFENER TYPE 1 (See Note 5)
1:5

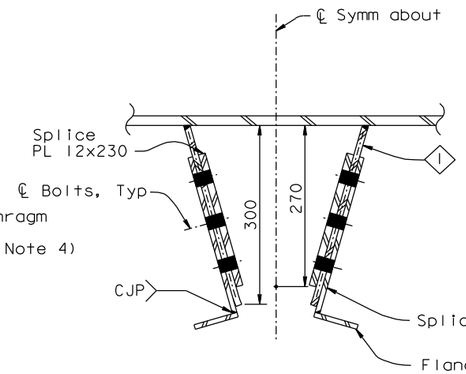

SECTION A-A
1:5
(Section A'-A' similar)

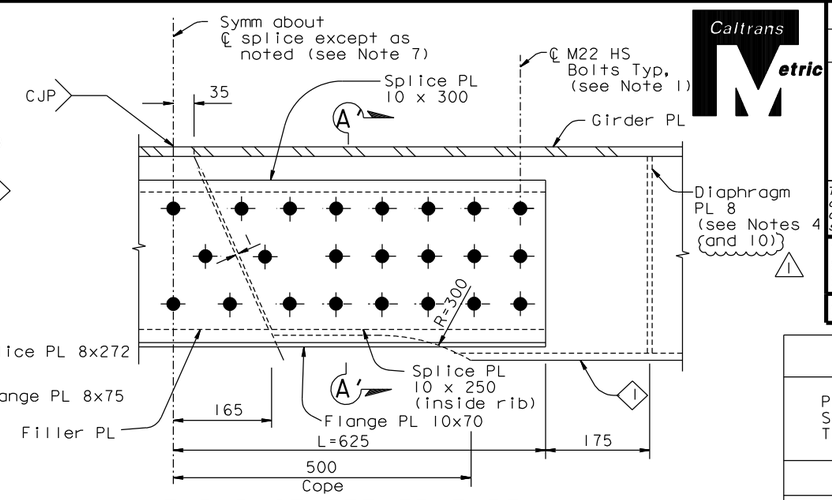

AT RIB STIFFENER TYPE 1 (See Note 6)
1:5

STIFFENER SPLICE TABLE 1				
PLATE STIFFENER THICKNESS †	SPLICE PLATE		HS BOLT	
	PLATE SIZE	L	N	SIZE
14	8 x 120	555	7	M22
16	14 x 100	620	7	M24
18 (depth 155)	14 x 140	650	12	M22
18 (depth 170)	12 x 155	475	12	M22
20	14 x 155	555	14	M22
22	18 x 150	565	16	M22
25	18 x 215	500	21	M22
28	18 x 245	565	21	M24
30	NA - See Table 2			
35	NA - See Table 2			

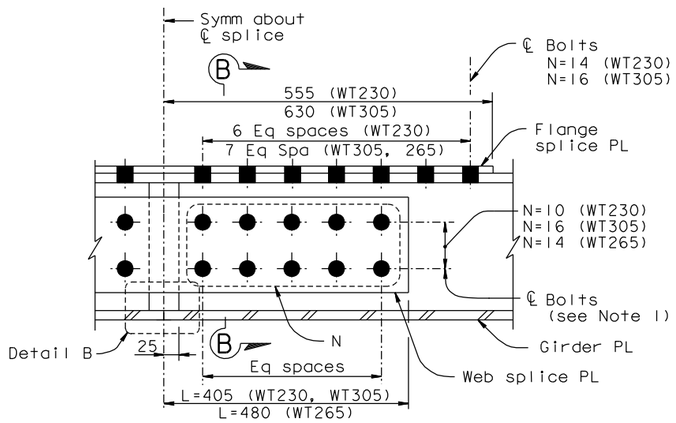

AT WT STIFFENER (See Notes 2 & 9)
1:5

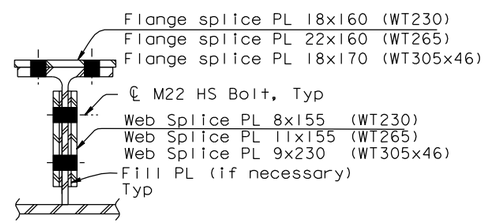

SECTION B-B
1:5

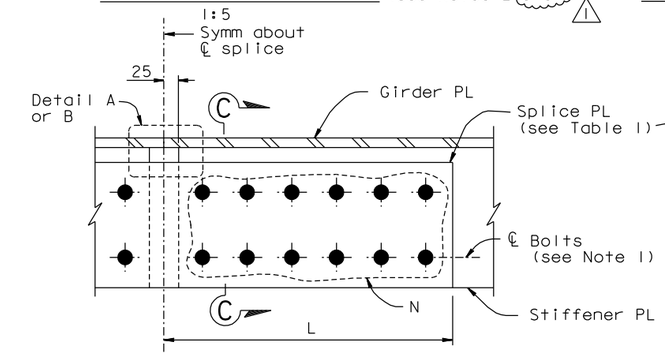

AT PLATE STIFFENER, † < 30 (See Note 2)
1:5

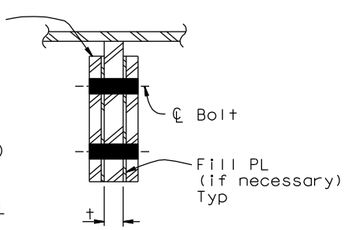

SECTION C-C (See Note 8)
1:5

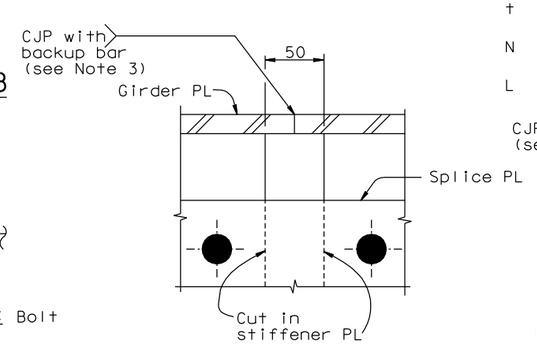

DETAIL A
1:2.5

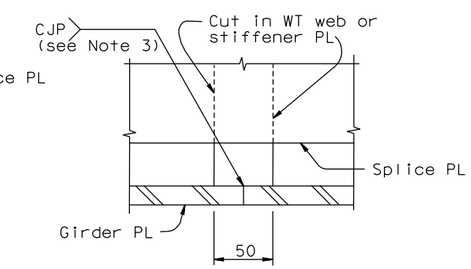

DETAIL B
1:2.5

BOLTED TYPE CONNECTION
GIRDER SPLICE DETAILS

LEGEND:

† Stiffener PL thickness

N Number of bolts required for half-splice

L Length of half-splice

NOTES:

1. For "Typical Girder Details" sheets, all bolts shall be detailed according to the bolt dimension table. See "Typical Girder Details No.1" sheet. All bolts are HS, unless noted otherwise.
2. For location of connection type, see Table 2 on "Typical Girder Details No.11" sheet.
3. Girder plate weld details shown in Details A and B are applicable for both field and shop splices on all box girder faces.
4. Sealing diaphragm. See note 4 on "Typical Girder Details No.4" sheet.
5. Splice details are applicable for shop and field splices for panel points 8 through 115.
6. Splice details are applicable for shop and field splices for panel points 115 through 128.
7. At the floorbeam side of the splice, the diaphragm plate shall not be used. Continuity plate shall be sealed according to diaphragm plate requirements.
8. For Section C-C at optional kinks, see "Typical Girder Details No.11A" sheet.
9. For bolted connections details at kinked field splice PP116-PP118, see "Typical Girder Details No.11B" sheet.
10. The diaphragm PL may be shifted by 50 mm to facilitate installation of the inside splice plate, subject to review and approval of the Engineer.

REGISTERED PROFESSIONAL ENGINEER Marwan N. Nader No. C 054426 Exp. 12/31/13 CIVIL STATE OF CALIFORNIA

FOR REVISIONS ONLY

ALL DIMENSIONS ARE IN MILLIMETERS UNLESS OTHERWISE SHOWN

CONTRACT CHANGE ORDER NO. ____
SHEET ___ OF ___

REQUESTS FOR INFORMATION NOT ADDRESSED IN THIS CCO REMAIN IN FORCE

R. Valizadeh/V. Toan/Y.L./W.L./F.C.
DESIGN OVERSIGHT
Roya Valizadeh / Vong Toan / Y. Liu
SIGN OFF DATE 04/18/12

MARK	DATE	DESCRIPTIONS	BY	CH'D	CCO#
1	04/18/12	EAST END OBG	MN	GB	87

REVISIONS

	BY	CHECKED	
DESIGN	G. Baker	P. Ritchie	
DETAILS	S. Camo	T. McMeans	
QUANTITIES	G. Baker	M. Roberts	

PREPARED FOR THE STATE OF CALIFORNIA DEPARTMENT OF TRANSPORTATION

R. Manzanarez
PROJECT ENGINEER

BRIDGE NO. 34-0006L/R
KILOMETER POST 13.2/13.9

SAN FRANCISCO OAKLAND BAY BRIDGE
EAST SPAN SEISMIC SAFETY PROJECT
SELF-ANCHORED SUSPENSION BRIDGE
(SUPERSTRUCTURE & TOWER)

TYPICAL GIRDER DETAILS NO. 10

Rev. Date: 5-18-98

ORIGINAL SCALE IN MILLIMETERS FOR REDUCED PLANS 0 10 20 30 40 50 60 70 80 90 100

CU 04
EA 0120F1

DISREGARD PRINTS BEARING EARLIER REVISION DATES → REVISION DATES (PRELIMINARY STAGE ONLY) 05/15/99 08/02/99 05/31/01 04/08/02 07/01/02 12/19/02

SHEET 217R1 OF

FILE => I:\bb\04-012001\sas\contract plans and cco\cco\cco#87\temp\aggdkd06.dgn

USERNAME => DWinrow DATE PLOTTED => 18 APR 2012 TIME PLOTTED => 11:01:24

100% PS&E