DIST.	COUNTY	ROUTE	KILOMETER POST TOTAL PROJECT	SHEET NO.	TOTAL SHEETS
04	SF	80	13.2/13.9	629R4	1204

George Baker
REGISTERED ENGINEER - CIVIL
12-6-04
PLANS APPROVAL DATE

REGISTERED PROFESSIONAL ENGINEER George S. Baker No. C57112 Exp. 12/31/07 CIVIL STATE OF CALIFORNIA

The State of California or its officers or agents shall not be responsible for the accuracy or completeness of electronic copies of this plan sheet.

T.Y. LIN / MOFFATT & NICHOL
825 BATTERY STREET
SAN FRANCISCO, CA 94111

Caltrans now has a web site! To get to the web site, go to: http://www.dot.ca.gov

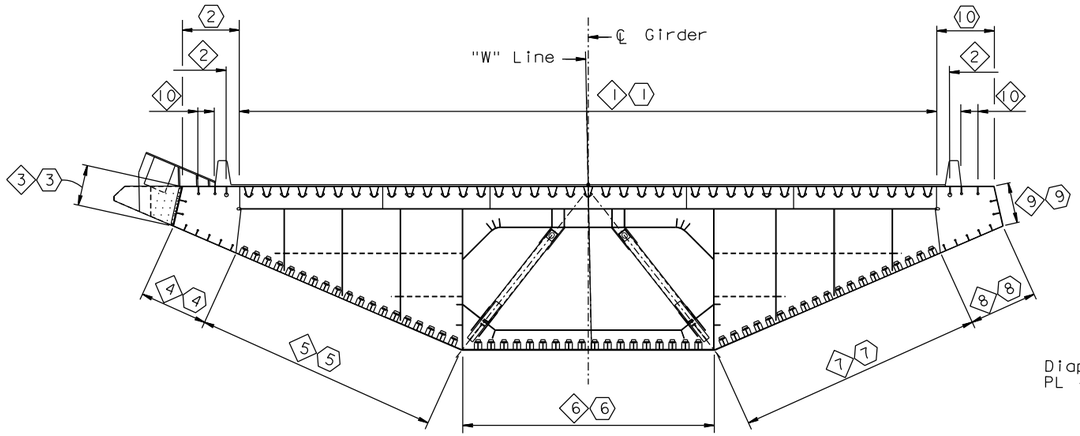

("W" LINE SECTION TYPE 1A SHOWN)

SECTION AT FLOORBEAM

1:100

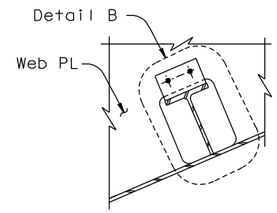

WT TYPE AT CROSSBEAM

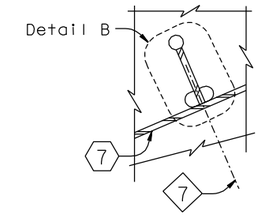

PLATE TYPE AT CROSSBEAM

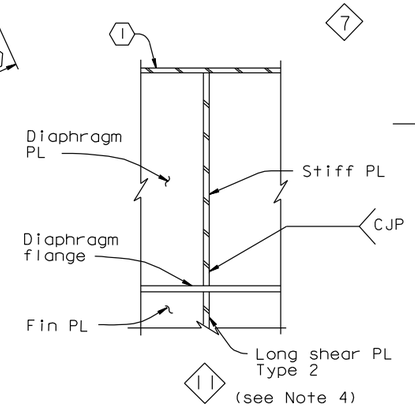

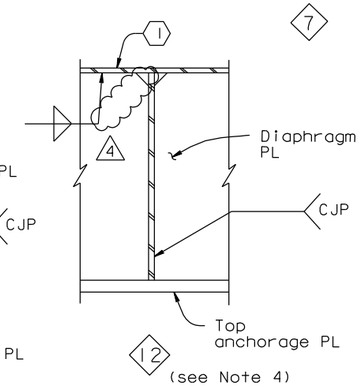

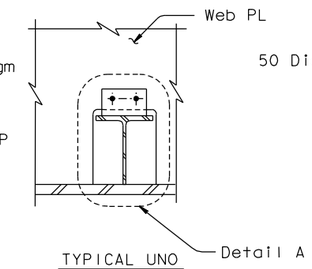

TYPICAL UNO

5 6 & 7 Except at crossbeam

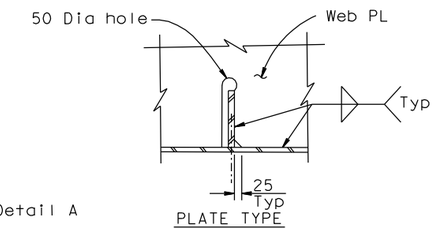

PLATE TYPE

5 6 & 7 Except at crossbeam (see Note 7)

4 14 (optional)

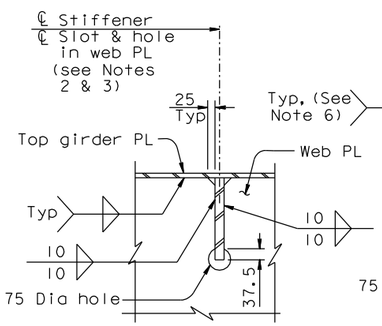

2

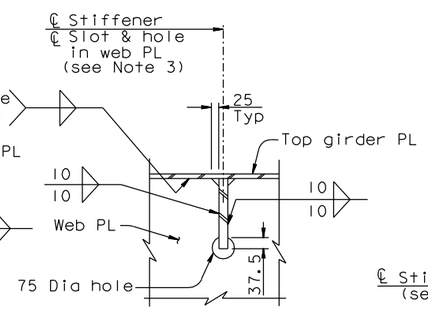

10, 13 thru 18

4 (see Note 8)

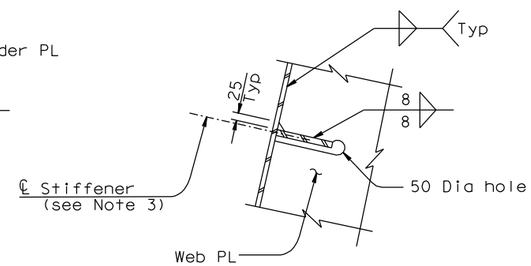

3 (see Note 5)

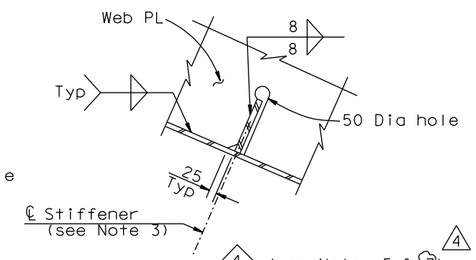

4 (see Notes 5 & 7) 4

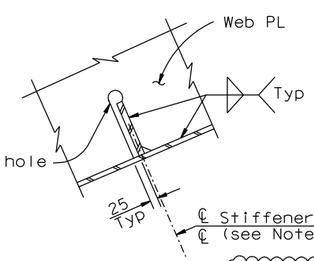

TYPICAL UNO (see Note 7) 4

8

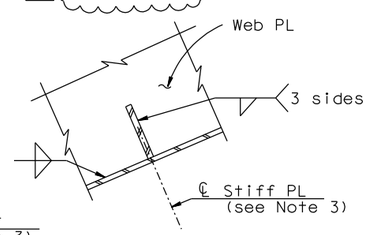

AT CROSSBEAM

8

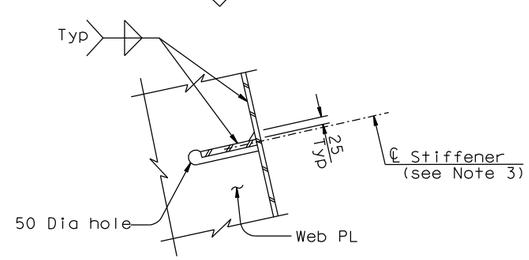

TYPICAL UNO

9

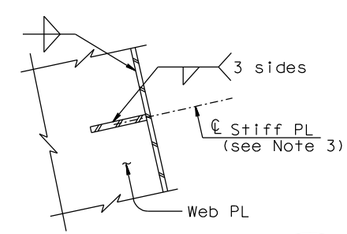

AT CROSSBEAM

9

STIFFENER DETAILS AT FLOORBEAM (See Note 3)

1:10

NOTES:

1. For Details A and B, see "Typical Girder Details No.6" sheet.
2. For details at PP117 to PP121, see "Girder at East Transition Details No.1" and "Girder At Pier E2 No.9" sheets.
3. All typical girder stiffeners are continuous through floorbeam web except for 8 and 9 at crossbeam, and 1 typically, and unless otherwise specified in the plans.
4. For locations of stiffener Types 1 thru 8, see "Girder at East Transition" sheets.
5. Typical details for 3 and 4 shown. For details at suspender location, see "Typical Girder Details No.6" sheet.
6. For welds at suspender brackets, see "Suspender Bracket Details No.1" sheet.
7. 4 East of PP117, in lieu of floorbeam cut-out, PL stiffeners may be welded to the floorbeam webs using a CJP with a reinforcing fillet wrapped around at top and bottom of stiffener. Use of drop-in pieces is permitted, subject to review and approval of the Engineer. At splices, drop-in piece on same side as the splice shall extend from the floorbeam web to the splice. The Type 5 stiffener drop-in piece parallel to the Lines E13/W13 may be welded to the floorbeam web using CJP with backing bar to remain, subject to review and approval of the Engineer.
8. For alternative details for Type 13 stiffeners, see "Typical Girder Details No.6" sheet.

Daniel J. Turner
REGISTERED PROFESSIONAL ENGINEER Daniel J. Turner No. C 65033 Exp. 06/30/09 CIVIL STATE OF CALIFORNIA

FOR REVISIONS 2 & 3 ONLY

REGISTERED PROFESSIONAL ENGINEER Marwan N. Nader No. C 054426 Exp. 12/31/13 CIVIL STATE OF CALIFORNIA

FOR REVISION 4 ONLY

CONTRACT CHANGE ORDER NO. _____
SHEET ____ OF ____

REQUESTS FOR INFORMATION NOT ADDRESSED IN THIS CCO REMAIN IN FORCE

MARK	DATE	DESCRIPTIONS	BY	CH'D	CCO#
4	04/18/12	EAST END OBG	MN	GB	87
3	07/31/09	LONGITUDINAL SHEAR PLATE	GB	DT	122
2	02/20/09	SUSPENDER BRACKETS	GB	DT	104
1	07/26/06	ADD STIFFENER TYPES 13 THRU 18	GB	NV	22

REVISIONS

ALL DIMENSIONS ARE IN MILLIMETERS UNLESS OTHERWISE SHOWN

R. Valizadeh/V. Toan/Y.L./W.L./F.C.
DESIGN OVERSIGHT
Roya Valizadeh / Vong Toan / Y. Liu
SIGN OFF DATE 04/18/12

	BY	CHECKED
DESIGN	G. Baker	P. Ritchie
DETAILS	S. Camo	T. McMeans
QUANTITIES	G. Baker	M. Roberts

PREPARED FOR THE STATE OF CALIFORNIA DEPARTMENT OF TRANSPORTATION

R. Manzanarez
PROJECT ENGINEER

BRIDGE NO. 34-0006L/R
KILOMETER POST 13.2/13.9

SAN FRANCISCO OAKLAND BAY BRIDGE
EAST SPAN SEISMIC SAFETY PROJECT
SELF-ANCHORED SUSPENSION BRIDGE
(SUPERSTRUCTURE & TOWER)

TYPICAL GIRDER DETAILS NO.5

Rev. Date: 5-18-98

ORIGINAL SCALE IN MILLIMETERS FOR REDUCED PLANS 0 10 20 30 40 50 60 70 80 90 100

CU 04
EA 0120F1

DISREGARD PRINTS BEARING EARLIER REVISION DATES

REVISION DATES (PRELIMINARY STAGE ONLY): 01/15/99 05/15/99 08/02/99 05/31/01 01/08/02 07/01/02 12/19/02 11/13/05

SHEET 212R4 OF

FILE => L:\BB\04-012001\SAS\Contract Plans and CCO\CCO\CCO#87\temp\agdkd03a.dgn

USERNAME => DWinrow DATE PLOTTED => 18 APR 2012 TIME PLOTTED => 10:55:43

100% PS&E