DIST.	COUNTY	ROUTE	KILOMETER POST TOTAL PROJECT	SHEET NO.	TOTAL SHEETS
04	SF	80	13.2/13.9	628R2	1204

Caltrans Metric

George Baker
REGISTERED ENGINEER - CIVIL

12-6-04
PLANS APPROVAL DATE

REGISTERED PROFESSIONAL ENGINEER George S. Baker No. C57112 Exp. 12/31/05 CIVIL STATE OF CALIFORNIA

The State of California or its officers or agents shall not be responsible for the accuracy or completeness of electronic copies of this plan sheet.

T.Y. LIN / MOFFATT & NICHOL
825 BATTERY STREET
SAN FRANCISCO, CA 94111

Caltrans now has a web site! To get to the web site, go to: http://www.dot.ca.gov

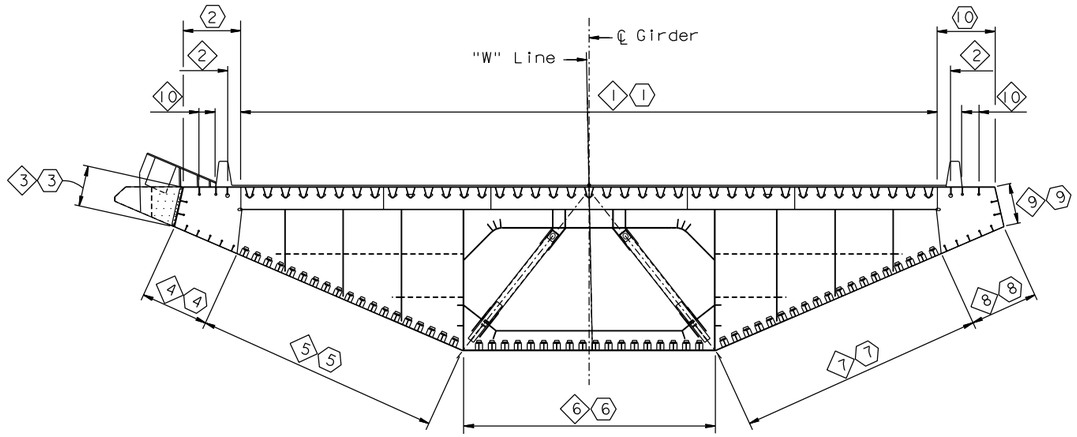

("W" LINE SECTION TYPE 1A SHOWN)

SECTION AT FLOORBEAM

1:100

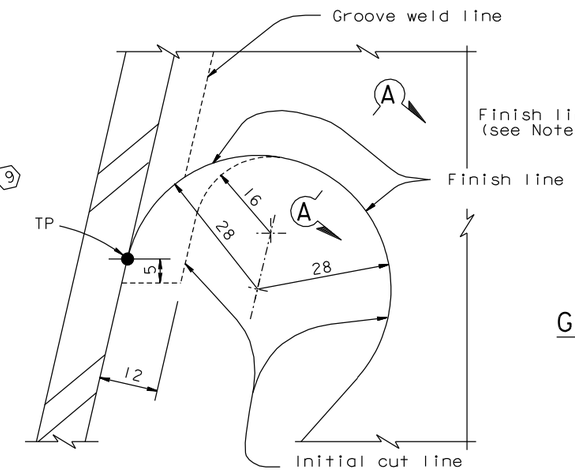

DETAIL A

NTS

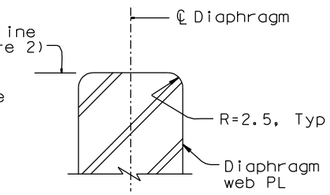

GRINDING DETAIL SECTION A-A

NTS

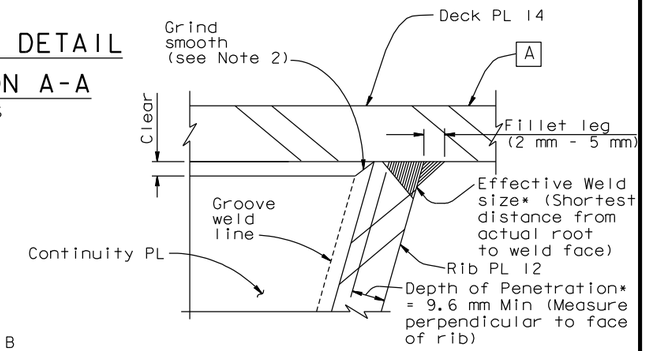

DETAIL B (Typical)

NTS

*NOTE: Depth of Penetration & Effective Weld size shall be measured on macroetch specimens without the 3 mm deduction per D1.5, Sections 2.3.1.3 and 2.3.4.

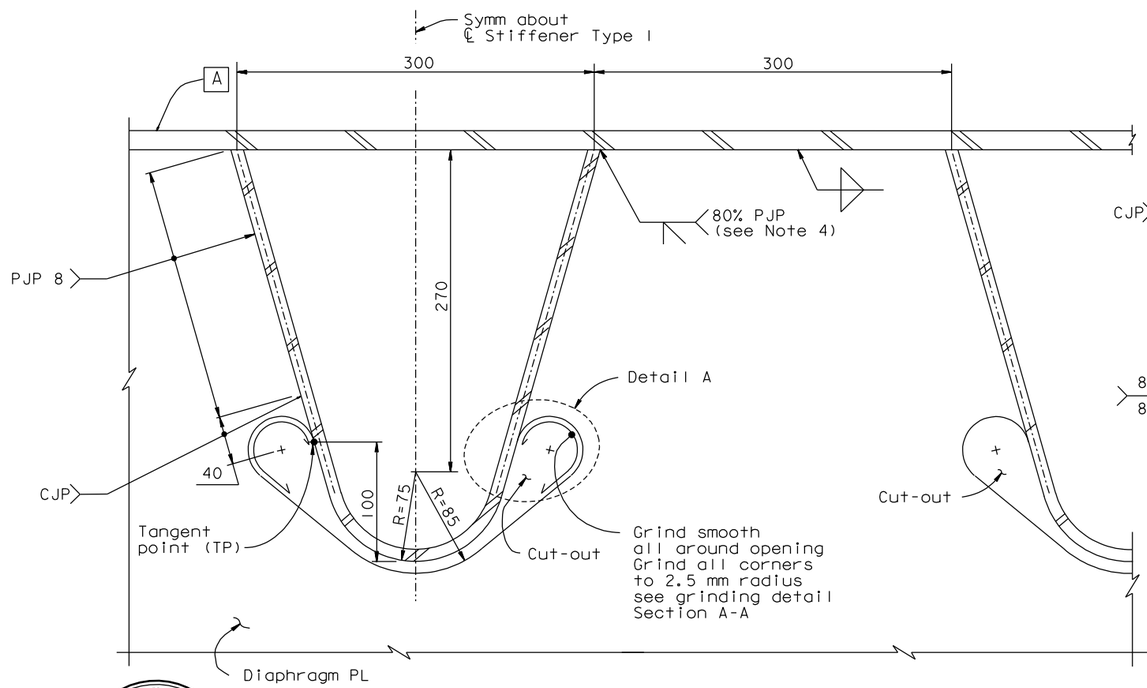

DETAIL TYPE 1

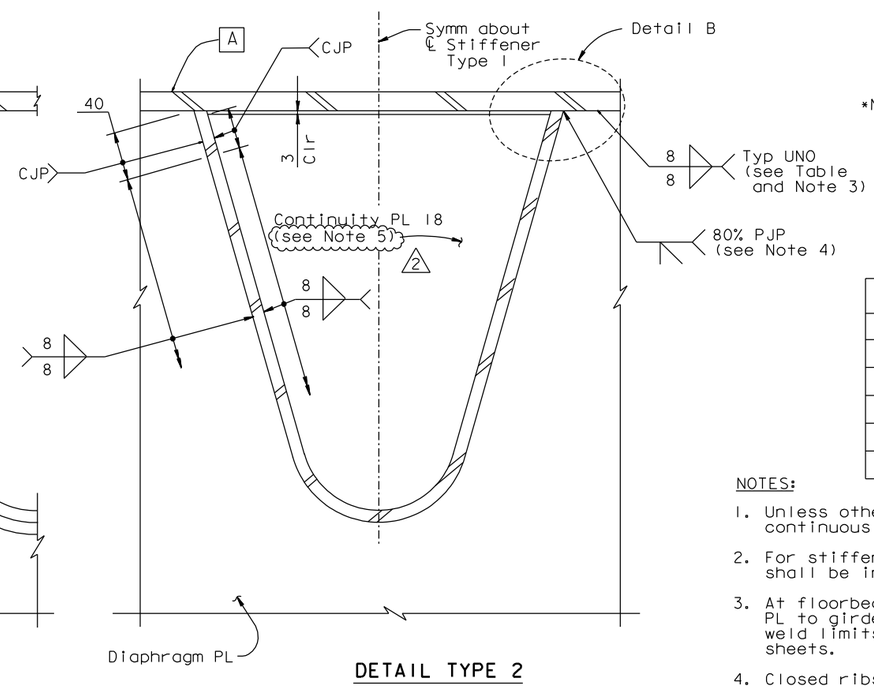

DETAIL TYPE 2

1 STIFFENER DETAIL AT FLOORBEAM (See Table)

1:2.5

DETAIL TYPE LOCATION TABLE		
PANEL POINT	DETAIL TYPE	WELD
8 Thru 14.5	2	As Shown
15 Thru 111	1	As Shown
111.5 Thru 120.5	2	As Shown
121 Thru 126.5	2	See Note 3
127 to Hinge A	2	As Shown

NOTES:

1. Unless otherwise indicated, stiffener Type 1 is continuous through floorbeam diaphragm PL.
2. For stiffener Type 1, finish surface of cut-out shall be in accordance with ANSI 500 roughness.
3. At floorbeam cable opening, weld of diaphragm PL to girder PL A shall be CJP. For CJP weld limits, see "Floorbeam At East Transition" sheets.
4. Closed ribs shall be sealed with diaphragm. See Diaphragm Detail on "Typical Girder Details No. 11" sheet.
5. 2 At the PL 35 diaphragms @ E2, use PL 35 continuity plate.

Daniel J. Turner
REGISTERED PROFESSIONAL ENGINEER Daniel J. Turner No. C 65033 Exp. 06/30/13 CIVIL STATE OF CALIFORNIA

FOR REVISIONS ONLY

CONTRACT CHANGE ORDER NO. _____
SHEET ____ OF ____

REQUESTS FOR INFORMATION NOT ADDRESSED IN THIS CCO REMAIN IN FORCE

ALL DIMENSIONS ARE IN MILLIMETERS UNLESS OTHERWISE SHOWN

R. Valizadeh/V. Toan/Y.L./W.L./F.C.
DESIGN OVERSIGHT
Roya Valizadeh / Vong Toan / Y. Liu
SIGN OFF DATE 09/01/11

MARK	DATE	DESCRIPTIONS	BY	CH'D	CCO#
2	09/01/11	EAST END OBG	DT	GB	87
1	10/03/08	U-RIB & TOWER CORNER SEALING	DT	NV	69

REVISIONS

	BY	CHECKED
DESIGN	G. Baker	P. Ritchie
DETAILS	S. Camo	T. McMeans
QUANTITIES	G. Baker	M. Roberts

PREPARED FOR THE STATE OF CALIFORNIA DEPARTMENT OF TRANSPORTATION

R. Manzanarez
PROJECT ENGINEER

BRIDGE NO. 34-0006L/R
KILOMETER POST 13.2/13.9

SAN FRANCISCO OAKLAND BAY BRIDGE
EAST SPAN SEISMIC SAFETY PROJECT
SELF-ANCHORED SUSPENSION BRIDGE
(SUPERSTRUCTURE & TOWER)

TYPICAL GIRDER DETAILS NO. 4

Rev. Date: 5-18-98

ORIGINAL SCALE IN MILLIMETERS FOR REDUCED PLANS 0 10 20 30 40 50 60 70 80 90 100

CU 04
EA 0120F1

DISREGARD PRINTS BEARING EARLIER REVISION DATES

REVISION DATES (PRELIMINARY STAGE ONLY): 01/15/99 05/15/99 08/02/99 05/31/01 04/08/02 07/01/02 12/19/02

SHEET 211R2 OF

FILE => I:\bb\04-012001\sas\contract plans and cco\cco\cco#87\1-original 09-01-11\dgn\agdkd03.dgn

USERNAME => PTom DATE PLOTTED => 30 AUG 2011 TIME PLOTTED => 11:00:11

100 % PS&E