DIST.	COUNTY	ROUTE	KILOMETER POST TOTAL PROJECT	SHEET NO.	TOTAL SHEETS
04	SF	80	13.2/13.9	625R1	1204

Caltrans Metric

George Baker
REGISTERED ENGINEER - CIVIL
12-6-04
PLANS APPROVAL DATE

REGISTERED PROFESSIONAL ENGINEER George S. Baker No. C57112 Exp. 12/31/05 CIVIL STATE OF CALIFORNIA

The State of California or its officers or agents shall not be responsible for the accuracy or completeness of electronic copies of this plan sheet.

T.Y. LIN / MOFFATT & NICHOL
825 BATTERY STREET
SAN FRANCISCO, CA 94111

Caltrans now has a web site! To get to the web site, go to: http://www.dot.ca.gov

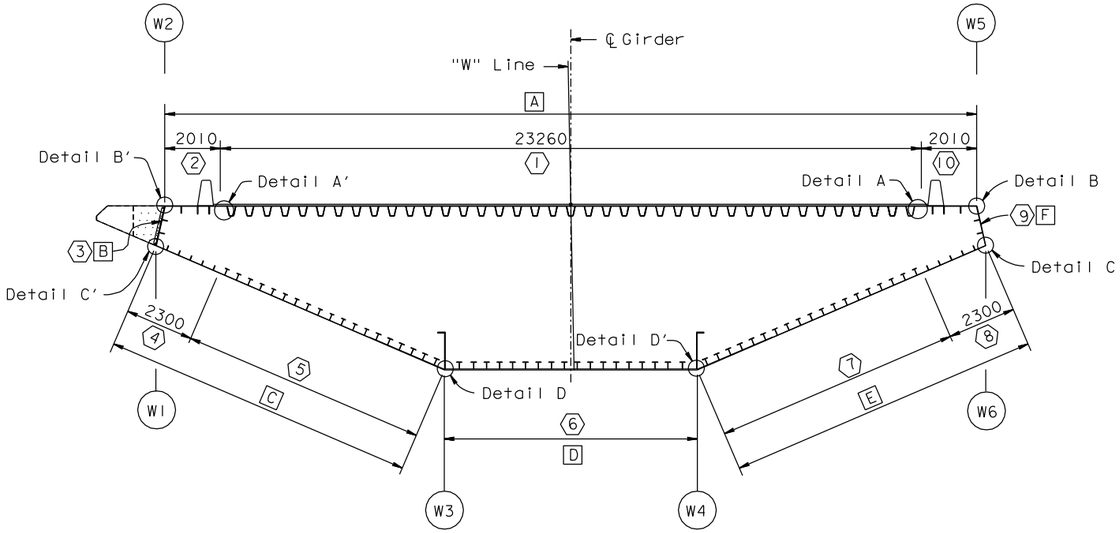

TYPICAL SECTION (See Note 3)

1:100
("W" LINE TYPE 1A SHOWN)

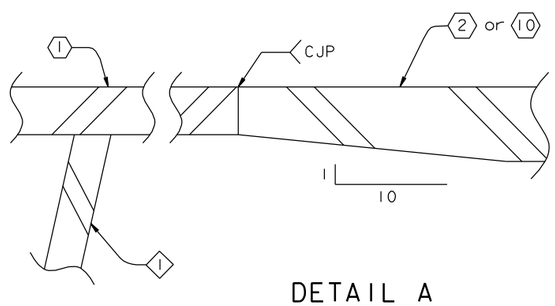

DETAIL A

1:1
(DETAIL A' SIMILAR)

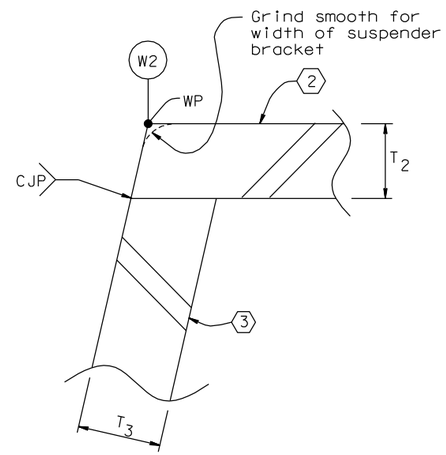

DETAIL B'

1:1
(DETAIL B SIMILAR)

LEGEND:

- 1 — Girder Stiffener Type 1
- 3 — Girder Plate Type 3
- A — Girder face designation A
- T_2 — Thickness of plate Type 2
- d — Diameter of fastener
- t — Thickness of thinner connected member

CONTRACT CHANGE ORDER NO. _____
SHEET ____ OF ____

REQUESTS FOR INFORMATION NOT ADDRESSED IN THIS CCO REMAIN IN FORCE

Daniel J. Turner
REGISTERED PROFESSIONAL ENGINEER Daniel J. Turner No. C 65033 Exp. 06/30/13 CIVIL STATE OF CALIFORNIA

FOR REVISIONS ONLY

BOLT DIMENSION TABLE

Spacing	Minimum	3d
	Maximum	Lesser of 178 or (100+4t)
	Preferred	3.43d
Minimum Edge Distance	Flame cut edges	1.75d
	Rolled or planed edges	1.43d
	Beams or Channels	1.3d
Maximum Edge Distance		Lesser of 125 or 8t

GIRDER PLATE THICKNESS TABLE

Plate Type	Girder Face	PANEL POINT												
		West Transition		Typical (See Note 4)			East Transition (See Note 3)							
		8-10	10-14	14-30	30-112	112-115	115-116	116-118	118-120	120-122	122-125	125-127	127-128	128-Hinge A
1	A	28	20	14	14	20	20	20	20	20	20	20	20	20
2	A	20	20	20	20	20	20	20	20	20	20	20	20	20
3	B	22	20	25	28	18	18	18	NA	NA	NA	NA	NA	NA
4	C	18	18	18	18	16	16	18	18	18	NA	NA	NA	NA
5	C	28	20	22	18	20	20	22	25	22	25	NA	NA	1 NA
5	N	NA	NA	NA	NA	NA	NA	NA	NA	NA	NA	NA	12	12
6	D	35	35	20	20	28	28	35	60	35	22	22	18	18
7	E	28	20	16	16	16	16	25	22	22	16	16	12	12
7	M	NA	NA	NA	NA	NA	NA	NA	NA	NA	NA	NA	12	12
8	E	18	18	16	16	16	16	18	18	18	16	16	12	NA
9	F	22	20	18	18	18	18	18	18	18	18	18	18	NA
10	A	20	20	20	20	20	20	20	20	20	20	20	20	20
13	D	NA	NA	NA	NA	NA	25	28	60	25	30	35	20	NA
14	D	NA	NA	NA	NA	NA	22	28	60	22	16	16	16	NA
15	H	22	NA	NA	18	NA	NA	NA	12	12	12	12	NA	NA
16	I	NA	NA	NA	NA	NA	NA	NA	NA	12	12	25	12	NA
17	G	NA	NA	NA	NA	NA	NA	NA	12	12	12	20	16	16
18	A	NA	NA	NA	NA	NA	NA	NA	12	12	12	NA	NA	NA
18	L	NA	NA	NA	NA	NA	NA	NA	NA	NA	NA	NA	16	16
19	Q	22	NA	NA	NA	NA	NA	NA	NA	NA	NA	NA	NA	NA

NOTES:

1. For Details B through D, see "Typical Girder Details No.2" sheet.
2. For details and dimensions not shown, see "Typical Girder Details" sheets.
3. For east transition girder plate type layout and limits, see "Girder At Pier E2" and "Girder At East Transition" sheets.
4. For tapers and limits of girder plates E, F and H between PP38 and PP46, see "Girder Transition Near Tower" sheets.
5. For "Typical Girder Details" sheets all bolts shall be detailed according to the bolt dimension table. All bolts are HS, UNO.
6. For "Typical Girder Details" sheets, UNO all fillet welds shall be 6 mm, for plate sizes not greater than 20 mm. For plates sizes greater than 20 mm fillet welds shall be 8 mm UNO.

ALL DIMENSIONS ARE IN MILLIMETERS UNLESS OTHERWISE SHOWN

R. Valizadeh/V. Toan/Y.L./W.L./F.C.
DESIGN OVERSIGHT
Ryan Valizadeh / Vong Toan / Y. Liu
SIGN OFF DATE 09/01/11

MARK	DATE	DESCRIPTIONS	BY	CH'D	CCO#
1	09/01/11	EAST END OBG	DT	GB	87

REVISIONS

	BY	CHECKED
DESIGN	G. Baker	P. Ritchie
DETAILS	S. Camo	T. McMeans
QUANTITIES	G. Baker	M. Roberts

PREPARED FOR THE STATE OF CALIFORNIA DEPARTMENT OF TRANSPORTATION

R. Manzanarez
PROJECT ENGINEER

BRIDGE NO. 34-0006L/R
KILOMETER POST 13.2/13.9

SAN FRANCISCO OAKLAND BAY BRIDGE
EAST SPAN SEISMIC SAFETY PROJECT
SELF-ANCHORED SUSPENSION BRIDGE
(SUPERSTRUCTURE & TOWER)

TYPICAL GIRDER DETAILS NO. 1

Rev. Date: 5-18-98

ORIGINAL SCALE IN MILLIMETERS FOR REDUCED PLANS 0 10 20 30 40 50 60 70 80 90 100

CU 04
EA 0120F1

DISREGARD PRINTS BEARING EARLIER REVISION DATES

REVISION DATES (PRELIMINARY STAGE ONLY): 01/15/99 05/15/99 08/07/99 05/31/01 04/08/02 07/01/02 12/19/02

SHEET 208R1 OF

FILE => I:\bb\04-012001\sas\contract plans and cco\cco\cco#87\1-original 09-01-11\dgn\agdkd01.dgn

USERNAME => PTom DATE PLOTTED => 30 AUG 2011 TIME PLOTTED => 10:44:24

100 % PS&E