DIST.	COUNTY	ROUTE	KILOMETER POST TOTAL PROJECT	SHEET NO.	TOTAL SHEETS
04	SF	80	13.2/13.9	426R1	1204

REGISTERED ENGINEER - CIVIL

12-6-04
PLANS APPROVAL DATE

The State of California or its officers or agents shall not be responsible for the accuracy or completeness of electronic copies of this plan sheet.

REGISTERED PROFESSIONAL ENGINEER
Marwan N. Nader
No. C 054426
Exp. 12/31/11
CIVIL
STATE OF CALIFORNIA

T.Y. LIN / MOFFATT & NICHOL
825 BATTERY STREET
SAN FRANCISCO, CA 94111

Caltrans now has a web site! To get to the web site, go to: http://www.dot.ca.gov

Caltrans Metric

STRUCTURAL COMPONENT	PANEL POINTS PP	STEEL GRADE	SPCM	TM/SRM	TTP
BOX GIRDER					
Girder Plates					
Face A	PP8 - PP110	A 709M Grade 345		X	
Face B, H	PP8 - PP110	A 709M Grade 345	*	X	
Face C	PP8 - PP110	A 709M Grade 345	*	X	
Face D	PP8 - PP110	A 709M Grade 345	*	X	
Face E	PP8 - PP110	A 709M Grade 345	*	X	
Face F	PP8 - PP110	A 709M Grade 345	*	X	
Face G	PP8 - PP110	A 709M Grade 345			
All Faces (except architectural plates)	PP 110-Hinge A	A 709M Grade 345	*	X	*
Architectural Plates	PP 110-Hinge A	A 709M Grade 345			
Girder Stiffeners					
All Faces	PP8-PP110	A 709M Grade 345**		X	
Architectural Plates	PP 110-Hinge A	A 709M Grade 345			
All Other Faces	PP 110-Hinge A	A 709M Grade 345**		X	
Rib Transitions and terminations		A 709M Grade 345		X	
Longitudinal Shear Plates					
Type 1		A 709M Grade 345		X	
Type 2 (W3 & E3 Lines)	PP120-PP127	A 709M Grade 345	X	X	* 1
Type 2 (Typical)				X	
Longitudinal Truss Gusset C & E	PP 9 to 118	A 709M Grade 345		X	
Stiffeners Plates for Access from Girder to Cross Beam	Typical at Cross Beams	A 709M Grade 345			
CROSS BEAM					
Typical and at Pier E2	PP8 - PP119	A 709M Grade 345	*	X	* 1
At East Anchorage			X	X	
FLOOR BEAM		A 709M Grade 345	*	X	*
HINGE A BULKHEADS	PP 127, 128.3	A 709M Grade 345	*	X	
SUSPENSION SYSTEM					
Suspender Brackets		A 709M Grade 345		X	
Cable Brackets		A 709M Grade 345		X	
Saddle Support Beam		A 709M Grade 345		X	
EAST CABLE ANCHORAGE		A 709M Grade 345	X	X	
Top Anchorage Plate		A 709M Grade 345	X	X	
PT Strand Stiffeners	PP 8	A 709M Grade 345		X	
End Stiffeners Plates	PP 8	A 709M Grade 345		X	
Bearing Stiffeners, Shear Key Stiffeners, Girder Key Plates, PL 50x700 1	PP119	A 709M Grade 345		X	X
Girder Diaphragm Plates	PP119	A 709M Grade 345		X	X
East Saddle Grillages	PP119	A 709M Grade 345	X	X	X
Girder Edge Beams	PP115 to PP128	A 709M Grade 345		X	
Girder Plate "K"	PP 117.5 to PP121	A 709M Grade 345	X	X	
Girder Plate "Vertical"	PP 120 to PP125	A 709M Grade 345	X	X	
End Block Plate	PP 128.3 to Hinge A	A 709M Grade 345		X	

** Stiffener plates 2 and 10 from PP8 to Hinge A are A709M HPS 485W

ABBREVIATIONS:

SPCM - Seismic Performance Critical Member
TM/SRM - Tension Member / Stress Reversal Member (See note 3)
TTP - Through Thickness Properties

CONTRACT CHANGE ORDER NO. 87
SHEET 3 OF 115

REQUESTS FOR INFORMATION NOT ADDRESSED IN THIS CCO REMAIN IN FORCE

STRUCTURAL COMPONENT	STEEL GRADE	SPCM	TM/SRM	TTP
Tower Shaft				
Tower Skin PL	A 709M Grade 345		See Note 4	X
Longitudinal Stiffener PL	A 709M Grade 345		See Note 4	X
Diagonal Stiffener PL	A 709M Grade 345		See Note 4	X
Tower Base Shear PL				
Tower Base Shear PL (Skin PL)	A 709M Grade 345			X
Tower Base Shear PL (Stiffener PL)	A 709M Grade 345			X
Tower Splice at 50.300 m, 83.000 m, 114.000 m				
Typical	A 709M Grade 345		See Note 4	X
Longitudinal Stiffener Splice PL	A 709M HPS 485W		See Note 4	X
Tower Splice at 146.280 m	A 709M HPS 485W		See Note 4	X
Tower Strut				
Shear Link	Shear Link Grade 345	X	X	X
Shear Link at Connection	Shear Link Grade 485	X	X	X
Shear Link Stiffener PL	A 709M Grade 345	X	X	X
Flange Splice PL	Shear Link Grade 485	X	X	X
Web Connection PL	Shear Link Grade 485	X	X	X
Doubler PL	A 709M HPS 485W		X	X
Tower Cross Bracing	A 709M Grade 345	X	X	X
Tower Strut Facade	A 709M Grade 345			
Tower Diaphragm Type 1A and 1B	A 709M Grade 345			
Tower Diaphragm Type 2A, 2B, 2C, 3A and 3B				
Diaphragm PL	A 709M HPS 485W		X	X
Web PL	A 709M HPS 485W			X
Connection PL	A 709M HPS 485W			X
Splice PL	A 709M HPS 485W			X
Channel	A 709M Grade 345			
Fit Lug PL	A 709M Grade 345			
Intermediate Stiffener PL	A 709M Grade 345			
Tower Diaphragm at 9 m and 13 m	A 709M Grade 345			
Tower Anchorage	A 709M Grade 345		See Note 4	X
Tower Skirt	A 709M Grade 345			
Tower Saddle Grillage				
Typical	A 709M HPS 485W		X	X
Top PL	A 709M Grade 345			X
Angle	A 709M Grade 345			
Bracket For Suspender at Tower	A 709M HPS 485W		X	X
Tower Saddle				
Built-up Portion (t ≤ 100)	A 709M Grade 345			X
Built-up Portion (t > 100)	A 572M (modified) Grade 345			X
Tower Head				
Tower Head Skin PL	A 709M Grade 345			
Tower Head Stiffener PL	A 709M Grade 345			
Tower Head Diaphragm	A 709M Grade 345			
Tower Top Diaphragm	A 709M Grade 345			

STRUCTURAL COMPONENT	STEEL GRADE	SPCM	TM/SRM	TTP
Extra Strong Steel Pipe				
At Cap Beam Transverse Tendons	A 53 Type S Grade B			
At Tie Down Cables	A 709M Grade 345			
Closure Joint	A 709M HPS 485W		X	X
t				
Hinge K Beam				
Pipe Beam Tubular (t=100)	Pipe Beam Grade 690	X	X	X
Pipe Beam Tubular (t=80)	Pipe Beam Grade 485	X	X	X
Anchorage PLs, Ring Stiffener PLs, Stiffener PLs	Pipe Beam Grade 485		X	X
West Deviation Saddle				
Built-up Portion (t ≤ 100)	A 709M HPS 485W			X
Built-up Portion (t > 100)	A 572M (modified) Grade 345			X
West Jacking Frame				
Jacking Frame	A 709M HPS 485W			X
Frame Blocking	A 709M HPS 485W			

LEGEND:

X - "Indicates that the entire structural component has the indicated property".

* - "Indicates that a limited portion of the structural component has the indicated property, as shown on the plans".

NOTES:

1. For definition of structural components, see the detail drawings.
2. All welds and splice plates to SPCM plates shall be SPCM quality.
3. A blank in "TM/SRM" Column indicates member does not sustain tension.
4. The "TM/SRM" designation shall apply only to welds which are within 30° of horizontal in their final erected position.
5. At the Contractor's option, it is acceptable to use SPCM/TTP grade steel for panels with lifting lugs in areas where SPCM/TTP is not required per design. 1

100 % PS&E

ALL DIMENSIONS ARE IN MILLIMETERS UNLESS OTHERWISE SHOWN

MARK	DATE	DESCRIPTIONS	BY	CH'D	CCO#
1	09/01/11	EAST END OBG	MN	DT	87

REVISIONS

R. Valizadeh/V. Toan/Y.L./W.L./F.C.
DESIGN OVERSIGHT
Roya Valizadeh / Vong Toan / Y. Liu
SIGN OFF DATE 09/01/11

	BY	CHECKED
DESIGN	M. Nader	S. Rodriguez
DETAILS	T. Ho	S. Rodriguez
QUANTITIES	D. Harrison	N. Vo

PREPARED FOR THE STATE OF CALIFORNIA DEPARTMENT OF TRANSPORTATION

R. Manzanarez
PROJECT ENGINEER

BRIDGE NO. 34-0006L/R
KILOMETER POST 13.2/13.9

SAN FRANCISCO OAKLAND BAY BRIDGE
EAST SPAN SEISMIC SAFETY PROJECT
SELF-ANCHORED SUSPENSION BRIDGE
(SUPERSTRUCTURE & TOWER)

GENERAL NOTES NO. 4

CU 04
EA 0120F1

DISREGARD PRINTS BEARING EARLIER REVISION DATES → 01/08/02 01/07/02 12/15/02 10/13/05 12/01/05

SHEET 009R1 OF

Rev. Date: 5-18-98

ORIGINAL SCALE IN MILLIMETERS FOR REDUCED PLANS 0 10 20 30 40 50 60 70 80 90 100

FILE => I:\bb\04-012001\sas\contract plans and cco\cco\cco#87\1-original 09-01-11\dgn\aagen04.dgn

USERNAME => PTom DATE PLOTTED => 30 AUG 2011 TIME PLOTTED => 09:32:32

DIST.	COUNTY	ROUTE	KILOMETER POST TOTAL PROJECT	SHEET NO.	TOTAL SHEETS
04	SF	80	13.2/13.9	622R3	1204

George Baker
REGISTERED ENGINEER - CIVIL
12-6-04
PLANS APPROVAL DATE

REGISTERED PROFESSIONAL ENGINEER George S. Baker No. C57112 Exp. 12/31/05 CIVIL STATE OF CALIFORNIA

The State of California or its officers or agents shall not be responsible for the accuracy or completeness of electronic copies of this plan sheet.

T.Y. LIN / MOFFATT & NICHOL
825 BATTERY STREET
SAN FRANCISCO, CA 94111

Caltrans now has a web site! To get to the web site, go to: http://www.dot.ca.gov

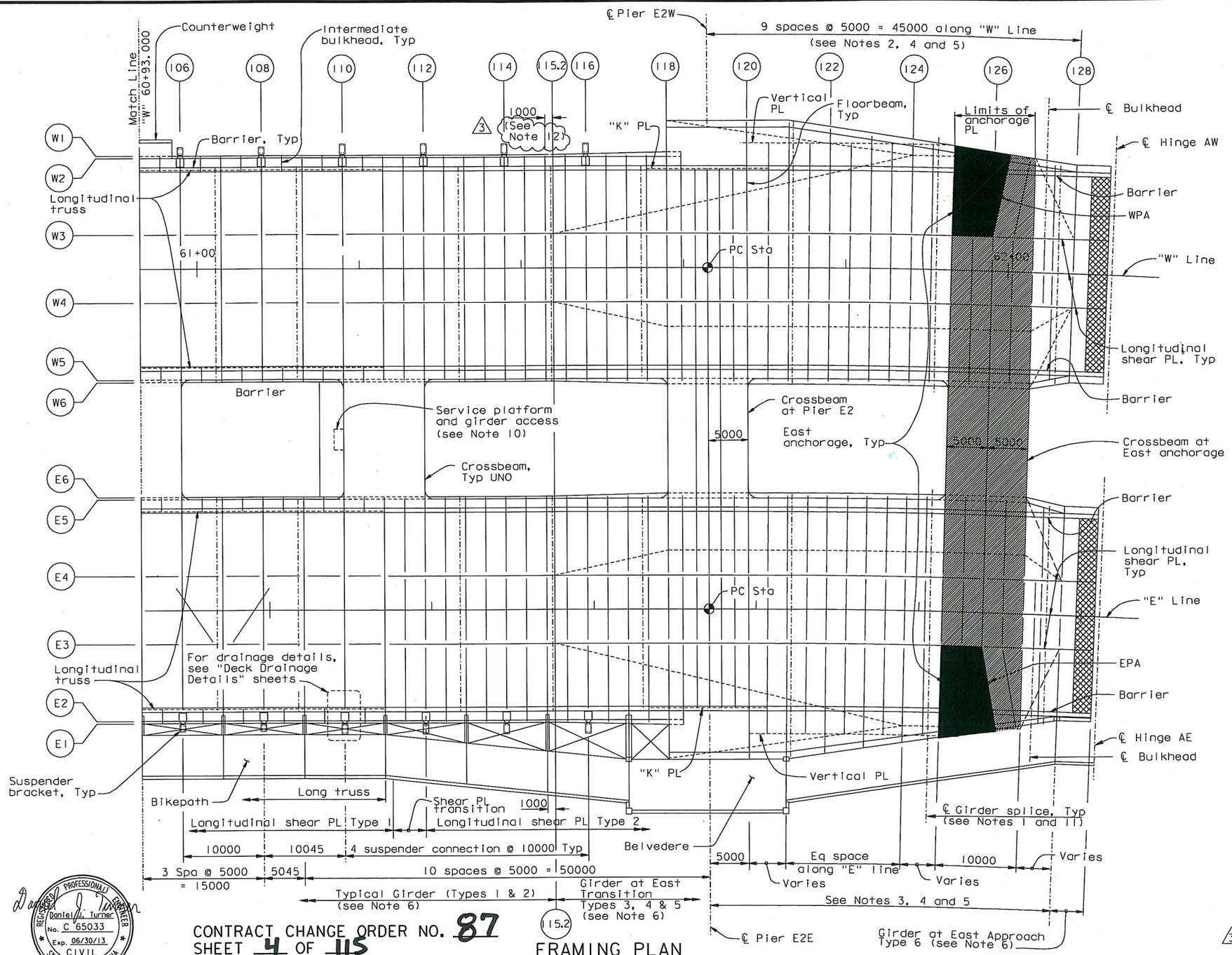

FRAMING PLAN
1:250

LEGEND:

- East anchorage
- Top anchorage
- Blockout for modular joint (see Note 7)

NOTES:

1. For girder splice details, see "Typical Girder Details" sheets.
2. "W" Line floorbeams from PP120.5 through PP124.5, and PP126, PP127.5 and PP128 are radial with respect to "W" Line curve.
3. "E" Line floorbeams from PP120.5 through PP124.5, and PP126, PP127.5 and 128 are aligned with "W" Line floorbeams and radial with respect to "E" Line curve.
4. "W" and "E" Line floorbeams from PP118 through PP120 are parallel.
5. "W" and "E" Line floorbeams from PP125 through PP127 are parallel. At the Contractor's option, "E" line floorbeam at PP127.5 may be parallel to "E" line floorbeam at PP127, subject to review and approval of the engineer. △3
6. For typical girder details, see "Typical Girder Details" sheets. For girder details and transition at East transition PP118 through PP128, see "Girder at East Transition" and "Girder At Pier E2" sheets.
7. For modular joint details, see "Hinge A Expansion Joint Details" sheets.
8. For Hinge A bulkheads, floorbeams and joint blockouts, see "Hinge A Details" sheets.
9. For "K" and vertical plates, see "Girder At East Transition Details" sheets.
10. For service platform details, see "Road Plans". For girder access details, see "Girder Access Details" sheets.
11. From PP115 through PP128, the distance between center line of girder splice and adjacent floorbeam is 800.
12. At the Contractor's option, the girder splice near PP115.2 may be relocated to PP115-700, subject to review and approval of the Engineer. △3

Daniel J. Turner
REGISTERED PROFESSIONAL ENGINEER Daniel J. Turner No. C 65033 Exp. 06/30/13 CIVIL STATE OF CALIFORNIA

FOR REVISIONS ONLY

CONTRACT CHANGE ORDER NO. 87
SHEET 4 OF 115

REQUESTS FOR INFORMATION NOT ADDRESSED IN THIS CCO REMAIN IN FORCE

MARK	DATE	DESCRIPTIONS	BY	CH'D	CCO#
3	09/01/11	EAST END OBG	DT	GB	87
2	01/16/09	BOX GIRDER AXIAL CAMBER	GB	DT	103
1	08/24/07	BARRIER MODIFICATIONS	GB	DT	44

REVISIONS

ALL DIMENSIONS ARE IN MILLIMETERS UNLESS OTHERWISE SHOWN

R. Valizadeh/V. Toan/Y.L./W.L./F.C.
DESIGN OVERSIGHT
Roger Valizadeh / Vong Toan / Y. Liu
SIGN OFF DATE 09/01/11

	BY	CHECKED
DESIGN	G. Baker	T. McMeans
DETAILS	M. Guiyas	T. McMeans
QUANTITIES	G. Baker	M. Roberts

PREPARED FOR THE STATE OF CALIFORNIA DEPARTMENT OF TRANSPORTATION

R. Manzanarez
PROJECT ENGINEER

BRIDGE NO. 34-0006L/R
KILOMETER POST 13.2/13.9

SAN FRANCISCO OAKLAND BAY BRIDGE
EAST SPAN SEISMIC SAFETY PROJECT
SELF-ANCHORED SUSPENSION BRIDGE
(SUPERSTRUCTURE & TOWER)

GIRDER FRAMING PLAN NO. 4

Rev. Date: 5-18-98

ORIGINAL SCALE IN MILLIMETERS FOR REDUCED PLANS 0 10 20 30 40 50 60 70 80 90 100

CU 04
EA 0120F1

DISREGARD PRINTS BEARING EARLIER REVISION DATES

REVISION DATES (PRELIMINARY STAGE ONLY) 01/09/99 05/10/99 09/07/99 01/20/01 05/17/01 01/08/02 01/17/02 12/19/02

SHEET 205R3 OF

FILE => I:\bb\04-0120F1\sas\contract plans and cco\cco\cco#87\1-original 09-01-11\dgn\aggir04.dgn

USERNAME => ALishansky DATE PLOTTED => 30 AUG 2011 TIME PLOTTED => 13:28:13

100 % PS&E

DIST.	COUNTY	ROUTE	KILOMETER POST TOTAL PROJECT	SHEET NO.	TOTAL SHEETS
04	SF	80	13.2/13.9	625R1	1204

George Baker
REGISTERED ENGINEER - CIVIL
12-6-04
PLANS APPROVAL DATE

REGISTERED PROFESSIONAL ENGINEER George S. Baker No. C57112 Exp. 12/31/05 CIVIL STATE OF CALIFORNIA

The State of California or its officers or agents shall not be responsible for the accuracy or completeness of electronic copies of this plan sheet.

T.Y. LIN / MOFFATT & NICHOL
825 BATTERY STREET
SAN FRANCISCO, CA 94111

Caltrans now has a web site! To get to the web site, go to: http://www.dot.ca.gov

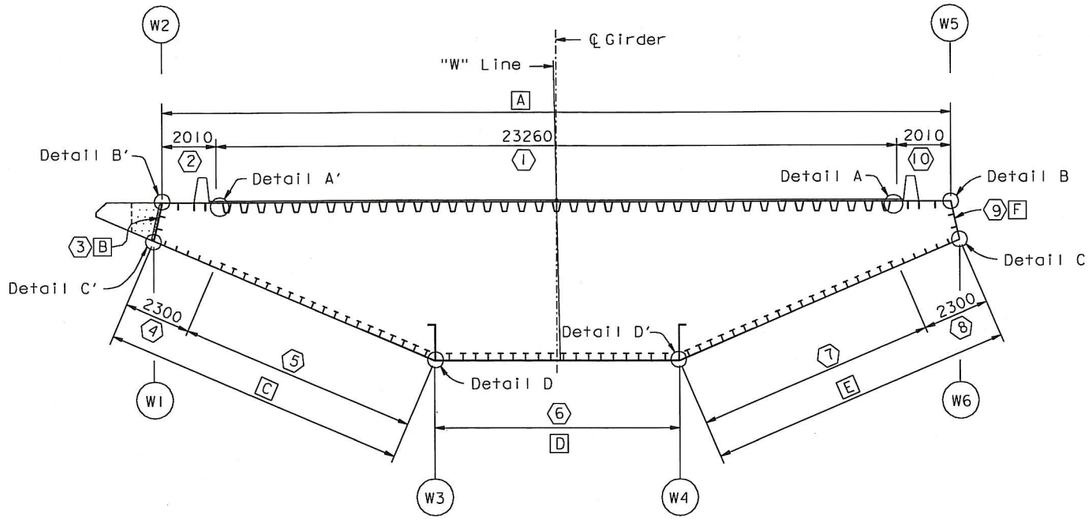

TYPICAL SECTION (See Note 3)

1:100
("W" LINE TYPE 1A SHOWN)

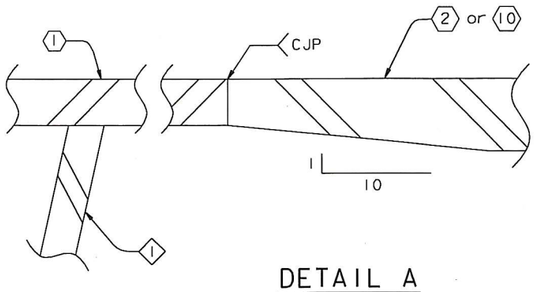

DETAIL A

1:1
(DETAIL A' SIMILAR)

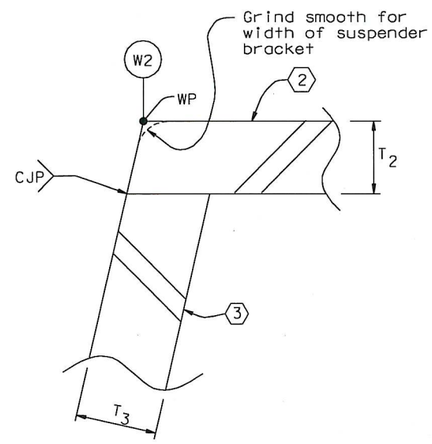

DETAIL B'

1:1
(DETAIL B SIMILAR)

LEGEND:

- 1 — Girder Stiffener Type 1
- 3 — Girder Plate Type 3
- A — Girder face designation A
- T_2 — Thickness of plate Type 2
- d — Diameter of fastener
- t — Thickness of thinner connected member

BOLT DIMENSION TABLE

Spacing	Minimum	3d
	Maximum	Lesser of 178 or (100+4t)
	Preferred	3.43d
Minimum Edge Distance	Flame cut edges	1.75d
	Rolled or planed edges	1.43d
	Beams or Channels	1.3d
Maximum Edge Distance		Lesser of 125 or 8t

GIRDER PLATE THICKNESS TABLE

Plate Type	Girder Face	PANEL POINT												
		West Transition		Typical (See Note 4)			East Transition (See Note 3)							
		8-10	10-14	14-30	30-112	112-115	115-116	116-118	118-120	120-122	122-125	125-127	127-128	128-Hinge A
1	A	28	20	14	14	20	20	20	20	20	20	20	20	20
2	A	20	20	20	20	20	20	20	20	20	20	20	20	20
3	B	22	20	25	28	18	18	18	NA	NA	NA	NA	NA	NA
4	C	18	18	18	18	16	16	18	18	18	NA	NA	NA	NA
5	C	28	20	22	18	20	20	22	25	22	25	NA	NA	1 NA
5	N	NA	NA	NA	NA	NA	NA	NA	NA	NA	NA	NA	12	12
6	D	35	35	20	20	28	28	35	60	35	22	22	18	18
7	E	28	20	16	16	16	16	25	22	22	16	16	12	12
7	M	NA	NA	NA	NA	NA	NA	NA	NA	NA	NA	NA	12	12
8	E	18	18	16	16	16	16	18	18	18	16	16	12	NA
9	F	22	20	18	18	18	18	18	18	18	18	18	18	NA
10	A	20	20	20	20	20	20	20	20	20	20	20	20	20
13	D	NA	NA	NA	NA	NA	25	28	60	25	30	35	20	NA
14	D	NA	NA	NA	NA	NA	22	28	60	22	16	16	16	NA
15	H	22	NA	NA	18	NA	NA	NA	12	12	12	12	NA	NA
16	I	NA	NA	NA	NA	NA	NA	NA	NA	12	12	25	12	NA
17	G	NA	NA	NA	NA	NA	NA	NA	12	12	12	20	16	16
18	A	NA	NA	NA	NA	NA	NA	NA	12	12	12	NA	NA	NA
18	L	NA	NA	NA	NA	NA	NA	NA	NA	NA	NA	NA	16	16
19	Q	22	NA	NA	NA	NA	NA	NA	NA	NA	NA	NA	NA	NA

NOTES:

1. For Details B through D, see "Typical Girder Details No.2" sheet.
2. For details and dimensions not shown, see "Typical Girder Details" sheets.
3. For east transition girder plate type layout and limits, see "Girder At Pier E2" and "Girder At East Transition" sheets.
4. For tapers and limits of girder plates E, F and H between PP38 and PP46, see "Girder Transition Near Tower" sheets.
5. For "Typical Girder Details" sheets all bolts shall be detailed according to the bolt dimension table. All bolts are HS, UNO.
6. For "Typical Girder Details" sheets, UNO all fillet welds shall be 6 mm, for plate sizes not greater than 20 mm. For plates sizes greater than 20 mm fillet welds shall be 8 mm UNO.

REGISTERED PROFESSIONAL ENGINEER Daniel J. Turner No. C 65033 Exp. 06/30/13 CIVIL STATE OF CALIFORNIA

FOR REVISIONS ONLY

CONTRACT CHANGE ORDER NO. 87
SHEET 5 OF 115

REQUESTS FOR INFORMATION NOT ADDRESSED IN THIS CCO REMAIN IN FORCE

ALL DIMENSIONS ARE IN MILLIMETERS UNLESS OTHERWISE SHOWN

R. Valizadeh/V. Toan/Y. L./W. L./F. C.
DESIGN OVERSIGHT
Roya Valizadeh / Vong Toan / Y. Liu
SIGN OFF DATE 09/01/11

MARK	DATE	DESCRIPTIONS	BY	CH'D	CCO#
1	09/01/11	EAST END OBG	DT	GB	87

REVISIONS

DESIGN	BY G. Baker	CHECKED	P. Ritchie
DETAILS	BY S. Camo	CHECKED	T. McMeans
QUANTITIES	BY G. Baker	CHECKED	M. Roberts

PREPARED FOR THE STATE OF CALIFORNIA DEPARTMENT OF TRANSPORTATION

R. Manzanarez
PROJECT ENGINEER

BRIDGE NO. 34-0006L/R
KILOMETER POST 13.2/13.9

SAN FRANCISCO OAKLAND BAY BRIDGE
EAST SPAN SEISMIC SAFETY PROJECT
SELF-ANCHORED SUSPENSION BRIDGE
(SUPERSTRUCTURE & TOWER)

TYPICAL GIRDER DETAILS NO. 1

Rev. Date: 5-18-98

ORIGINAL SCALE IN MILLIMETERS FOR REDUCED PLANS 0 10 20 30 40 50 60 70 80 90 100

CU 04
EA 0120F1

DISREGARD PRINTS BEARING EARLIER REVISION DATES

REVISION DATES (PRELIMINARY STAGE ONLY) 01/15/99 05/15/99 08/05/99 05/17/01 04/08/02 07/24/02 12/19/02

SHEET 208R1 OF

FILE => I:\bb\04-012001\sas\contract plans and cco\cco\cco#87\1-original 09-01-11\dgn\agdkd01.dgn

USERNAME => PTom DATE PLOTTED => 30 AUG 2011 TIME PLOTTED => 10:44:24

100 % PS&E

DIST.	COUNTY	ROUTE	KILOMETER POST TOTAL PROJECT	SHEET NO.	TOTAL SHEETS
04	SF	80	13.2/13.9	627R2	1204

Caltrans Metric

George Baker
REGISTERED ENGINEER - CIVIL
12-6-04
PLANS APPROVAL DATE

REGISTERED PROFESSIONAL ENGINEER George S. Baker No. C57112 Exp. 12/31/05 CIVIL STATE OF CALIFORNIA

The State of California or its officers or agents shall not be responsible for the accuracy or completeness of electronic copies of this plan sheet.

T.Y. LIN / MOFFATT & NICHOL
825 BATTERY STREET
SAN FRANCISCO, CA 94111

Caltrans now has a web site! To get to the web site, go to: http://www.dot.ca.gov

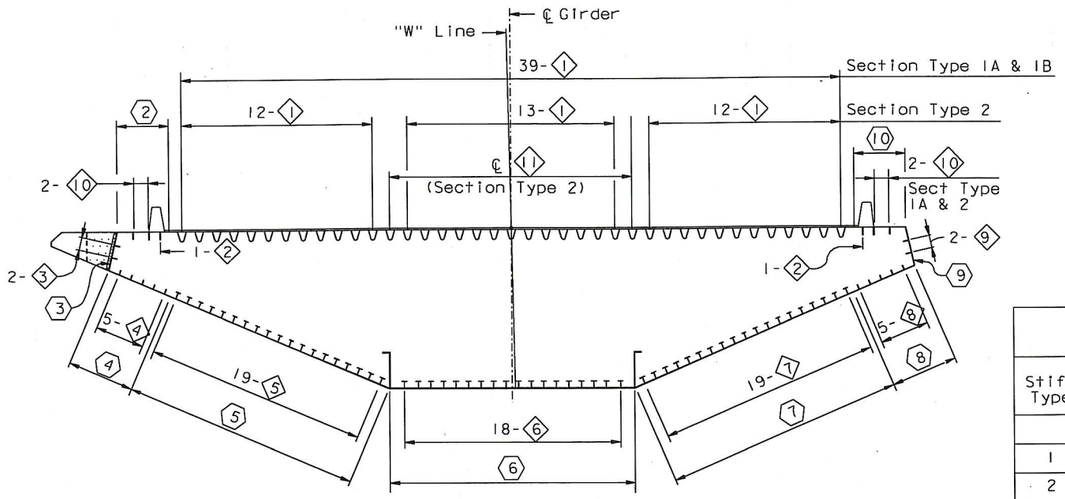

("W" LINE SECTION TYPE 1A SHOWN. SEE NOTE 1)

TYPICAL SECTION

1:100

LEGEND:

1 Girder plate Type 1

1 Girder stiffener Type 1

GIRDER STIFFENER SIZE TABLE

Stiff Type	PANEL POINT										
	West Transition	Main Span				East Transition					
	8-10	10-14	14-30	30-112	112-115	115-118	118-120	120-122	122-125	125-127	127-Hinge A
1	Varies	Rib 12	Rib 12	Rib 12	Rib 12	Rib 12	Rib 12	Rib 12	Rib 12	Rib 12	Rib 12
2	PL 35x275	PL 35x275	PL 35x275	PL 35x275	PL 35x275	PL 35x275	PL 35x275	PL 35x275	PL 35x275	PL 35x275	PL 35x275
3	PL 22x200	PL 20x180	PL 22x200	PL 28x260	PL 20x180	PL 22x200	PL 22x200	2 NA	NA	NA	NA
4	PL 22x200	PL 22x200	PL 22x200	PL 22x200	PL 20x180	PL 22x200	PL 25x230	PL 20x180	NA	NA	NA
5	PL 25x230	PL 22x200	WT 265x42.5	WT 265x42.5	WT 265x42.5	WT 265x42.5	PL 25x230	PL 22x200	PL 22x200	PL 22X200	PL 16x140
6	PL 35x320	PL 35x320	WT 265x42.5	WT 265x42.5	WT 305x46	WT 305x46	PL 28x255	PL 25x230	PL 25x230	PL 25x230	PL 25x230
7	PL 25x230	PL 22x200	WT 230x34	WT 230x34	WT 230x34	WT 265x42.5	PL 22x200	PL 22x200	PL 20x180	PL 20x180	PL 16x140
8	PL 22x200	PL 22x200	PL 20x180	PL 20x170	PL 20x180	PL 22x185	PL 20x180	PL 22x200	PL 20x180	PL 20x180	PL 16x140
9	PL 22x200	PL 20x180	PL 20x180	PL 18x170	PL 20x180	PL 22x200	PL 22x185	PL 22x185	PL 22x185	PL 22x185	PL 22x185
10	PL 30x235	PL 30x235	PL 30x235	PL 30x235	PL 30x235	PL 30x235	PL 30x235	PL 30x235	PL 30x235	PL 30x235	PL 30x235
13	NA	NA	NA	NA	NA	PL 25x230	PL 28x255	PL 25x230	PL 25x230	PL 25x230	PL 20x180
14	NA	NA	NA	NA	NA	PL 25x230	PL 28x255	PL 22x200	PL 20x180	PL 20x180	PL 20x180
15	NA	NA	NA	NA	NA	NA	PL 16x140	PL 16x140	PL 16x140	PL 16x140	NA
16	NA	NA	NA	NA	NA	NA	NA	PL 16x140	PL 16x140	PL 25x230	PL 16x140
17	NA	NA	NA	NA	NA	NA	PL 16x140	PL 16x140	PL 16x140	PL 22x200	PL 18x170
18	NA	NA	NA	NA	NA	NA	PL 18x155	PL 18x155	PL 18x155	NA	PL 18x170
11	PL 18	PL 18	NA	NA	PL 18	(see Note 3)					
12	NA	NA	NA	NA	NA	NA	NA	NA	NA	PL 22 UNO	NA

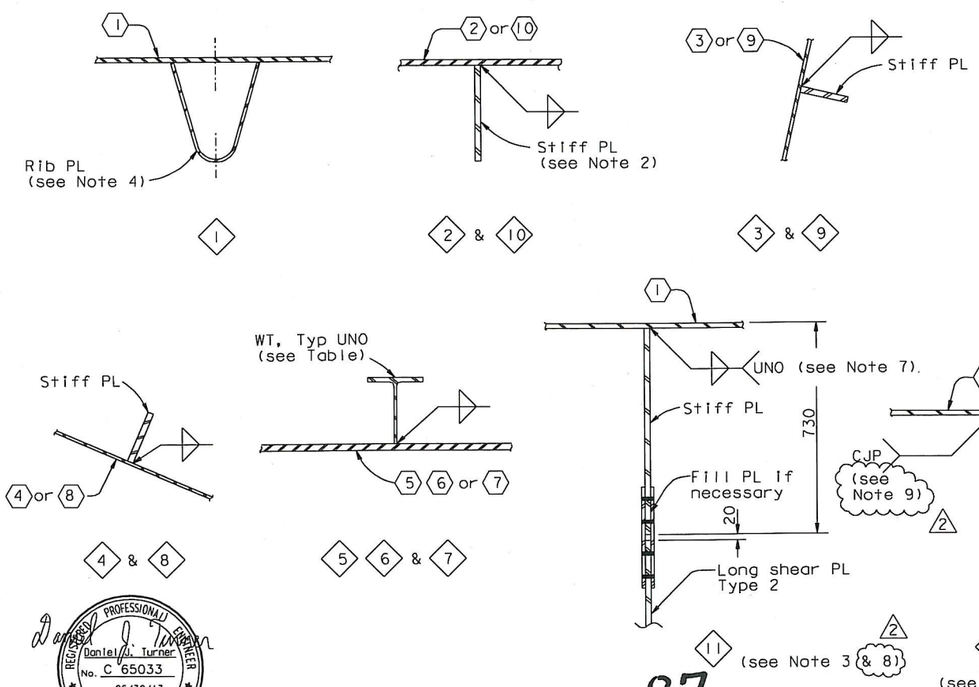

STIFFENER DETAILS

1:10

2 8. At the Contractor's option, PL 20 may be used in lieu of PL 18, subject to review and approval of the Engineer.

9. At the Contractor's option, a double-sided (20 mm) fillet or a double-sided PJP (6 mm effective with 10 mm reinforcing fillets) may be used in lieu of a CJP, subject to review and approval of the Engineer.

NOTES:

1. For stiffener layout in girder section Type 1B, see "Partial Typical Section No.3" sheet. For stiffener layout of east transition girder, see "Girder At East Transition" sheets.
2. Stiffener Types 2 and 10 shall be ASTM A709M HPS Grade 485W steel.
3. For details of stiffener Type 11 not shown, see "Girder At East Transition No.9", "Girder At East Transition No.15" and "Girder At East Transition No.16" sheets.
4. For details of stiffener Type 1, see "Typical Girder Details No.4" sheet.
5. For details of longitudinal shear plates, see "Typical Girder Details No. 7" sheet.
6. For details of stiffener Type 12 not shown, see "Girder At East Transition No.5", "Girder At East Transition No.6" and "Girder At East Transition No.17" sheets.
7. This weld shall be CJP from PP112 to PP128.3.

Daniel J. Turner
REGISTERED PROFESSIONAL ENGINEER Daniel J. Turner No. C 65033 Exp. 06/30/13 CIVIL STATE OF CALIFORNIA

FOR REVISIONS ONLY

CONTRACT CHANGE ORDER NO. 87
SHEET 6 OF 115

REQUESTS FOR INFORMATION NOT ADDRESSED IN THIS CCO REMAIN IN FORCE

ALL DIMENSIONS ARE IN MILLIMETERS UNLESS OTHERWISE SHOWN

R. Vaziazadeh/V. Toan/Y. L./W. L./F. C.
DESIGN OVERSIGHT
SIGN OFF DATE 09/01/11

MARK	DATE	DESCRIPTIONS	BY	CH'D	CCO#
2	09/01/11	EAST END OBG	DT	GB	87
1	07/31/09	LONGITUDINAL SHEAR PLATE	DT	GB	122

REVISIONS

Rev. Date: 5-18-98

DESIGN	BY G. Baker	CHECKED P. Ritchie	
DETAILS	BY S. Camo	CHECKED T. McMeans	
QUANTITIES	BY G. Baker	CHECKED M. Roberts	

ORIGINAL SCALE IN MILLIMETERS FOR REDUCED PLANS 0 10 20 30 40 50 60 70 80 90 100

PREPARED FOR THE STATE OF CALIFORNIA DEPARTMENT OF TRANSPORTATION

R. Manzanarez
PROJECT ENGINEER

CU 04
EA 0120F1

BRIDGE NO. 34-0006L/R
KILOMETER POST 13.2/13.9

SAN FRANCISCO OAKLAND BAY BRIDGE
EAST SPAN SEISMIC SAFETY PROJECT
SELF-ANCHORED SUSPENSION BRIDGE
(SUPERSTRUCTURE & TOWER)

TYPICAL GIRDER DETAILS NO. 3

DISREGARD PRINTS BEARING EARLIER REVISION DATES

REVISION DATES (PRELIMINARY STAGE ONLY) 05/15/99 08/02/99 05/18/01 04/08/02 07/10/02 12/19/02

SHEET 210R2 OF

FILE => I:\bb\04-012001\sas\contract plans and cco\cco\cco#87\1-original 09-01-11\dgn\agdkd02.dgn

USERNAME => PTom DATE PLOTTED => 30 AUG 2011 TIME PLOTTED => 10:45:45

100 % PS&E

DIST.	COUNTY	ROUTE	KILOMETER POST TOTAL PROJECT	SHEET NO.	TOTAL SHEETS
04	SF	80	13.2/13.9	628R2	1204

George Baker
REGISTERED ENGINEER - CIVIL
12-6-04
PLANS APPROVAL DATE
REGISTERED PROFESSIONAL ENGINEER George S. Baker No. C57112 Exp. 12/31/05 CIVIL STATE OF CALIFORNIA

The State of California or its officers or agents shall not be responsible for the accuracy or completeness of electronic copies of this plan sheet.

T.Y. LIN / MOFFATT & NICHOL
825 BATTERY STREET
SAN FRANCISCO, CA 94111

Caltrans now has a web site! To get to the web site, go to: http://www.dot.ca.gov

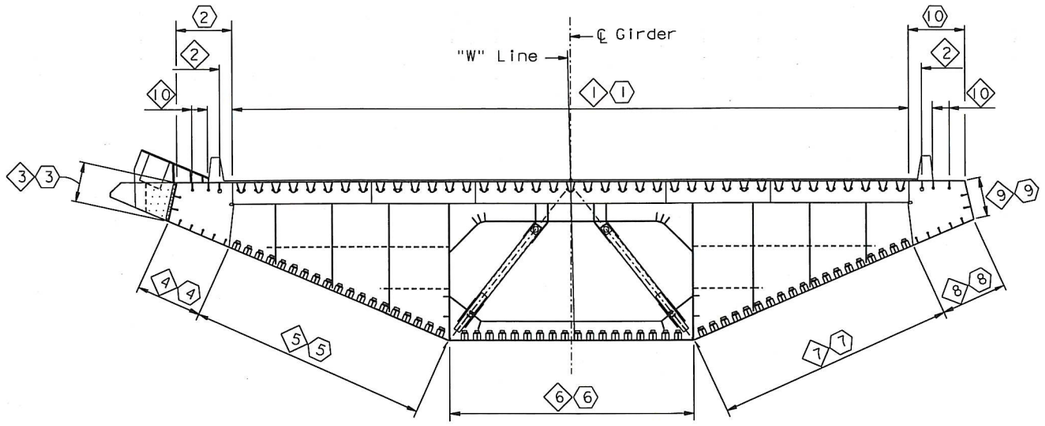

("W" LINE SECTION TYPE 1A SHOWN)

SECTION AT FLOORBEAM

1:100

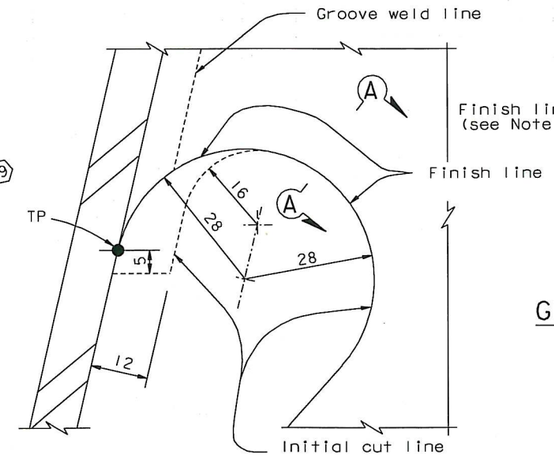

DETAIL A

NTS

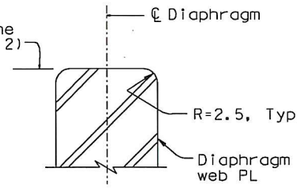

GRINDING DETAIL SECTION A-A

NTS

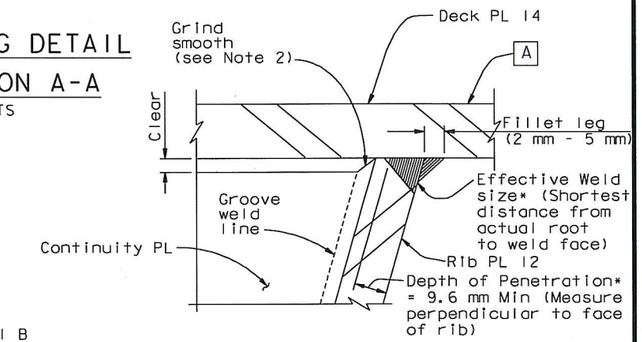

DETAIL B (Typical)

NTS

*NOTE: Depth of Penetration & Effective Weld size shall be measured on macroetch specimens without the 3 mm deduction per D1.5, Sections 2.3.1.3 and 2.3.4.

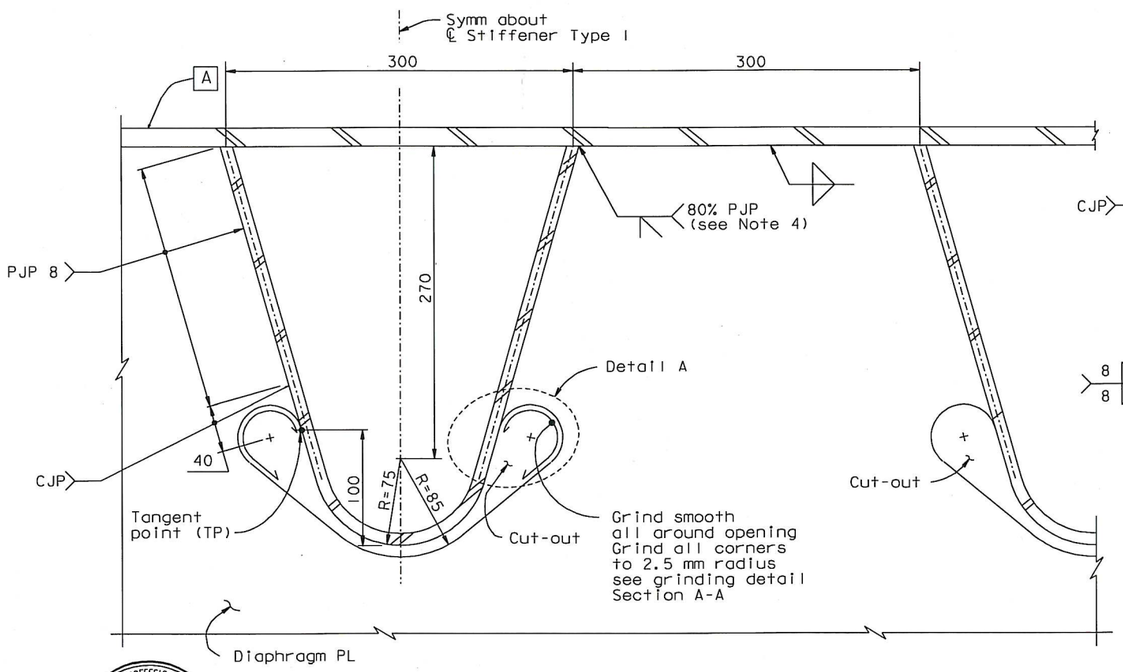

DETAIL TYPE 1

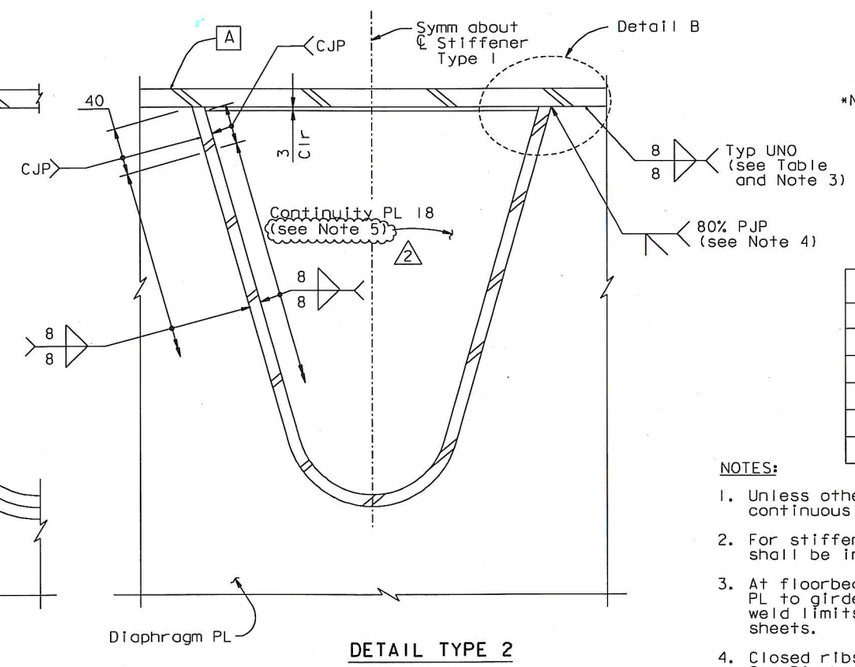

DETAIL TYPE 2

1 STIFFENER DETAIL AT FLOORBEAM (See Table)

1:2.5

DETAIL TYPE LOCATION TABLE		
PANEL POINT	DETAIL TYPE	WELD
8 Thru 14.5	2	As Shown
15 Thru 111	1	As Shown
111.5 Thru 120.5	2	As Shown
121 Thru 126.5	2	See Note 3
127 to Hinge A	2	As Shown

NOTES:

1. Unless otherwise indicated, stiffener Type 1 is continuous through floorbeam diaphragm PL.
2. For stiffener Type 1, finish surface of cut-out shall be in accordance with ANSI 500 roughness.
3. At floorbeam cable opening, weld of diaphragm PL to girder PL A shall be CJP. For CJP weld limits, see "Floorbeam At East Transition" sheets.
4. Closed ribs shall be sealed with diaphragm. See Diaphragm Detail on "Typical Girder Details No. 11" sheet.
5. At the PL 35 diaphragms @ E2, use PL 35 continuity plate. (2)

Daniel J. Turner
REGISTERED PROFESSIONAL ENGINEER Daniel J. Turner No. C 65033 Exp. 06/30/13 CIVIL STATE OF CALIFORNIA

FOR REVISIONS ONLY

CONTRACT CHANGE ORDER NO. 87
SHEET 7 OF 115

REQUESTS FOR INFORMATION NOT ADDRESSED IN THIS CCO REMAIN IN FORCE

ALL DIMENSIONS ARE IN MILLIMETERS UNLESS OTHERWISE SHOWN

R. Valizadeh/V. Toan/Y.L./W.L./F.C.
DESIGN OVERSIGHT
SIGN OFF DATE 09/01/11

MARK	DATE	DESCRIPTIONS	BY	CH'D	CCO#
2	09/01/11	EAST END OBG	DT	GB	87
1	10/03/08	U-RIB & TOWER CORNER SEALING	DT	NV	69

REVISIONS

	BY	CHECKED
DESIGN	G. Baker	P. Ritchie
DETAILS	S. Camo	T. McMeans
QUANTITIES	G. Baker	M. Roberts

PREPARED FOR THE STATE OF CALIFORNIA DEPARTMENT OF TRANSPORTATION

R. Manzanarez
PROJECT ENGINEER

BRIDGE NO. 34-0006L/R
KILOMETER POST 13.2/13.9

SAN FRANCISCO OAKLAND BAY BRIDGE
EAST SPAN SEISMIC SAFETY PROJECT
SELF-ANCHORED SUSPENSION BRIDGE
(SUPERSTRUCTURE & TOWER)

TYPICAL GIRDER DETAILS NO. 4

Rev. Date: 5-18-98

ORIGINAL SCALE IN MILLIMETERS FOR REDUCED PLANS 0 10 20 30 40 50 60 70 80 90 100

CU 04
EA 0120F1

DISREGARD PRINTS BEARING EARLIER REVISION DATES

REVISION DATES (PRELIMINARY STAGE ONLY) 01/15/99 05/15/99 09/07/99 05/31/01 04/08/02 07/01/02 12/19/02

SHEET 211R2 OF

FILE => I:\bb\04-0120I\sas\contract plans and cco\cco\cco#87\1-original 09-01-11\dgn\agdkd03.dgn

USERNAME => PTom DATE PLOTTED => 30 AUG 2011 TIME PLOTTED => 11:00:11

100 % PS&E

DIST.	COUNTY	ROUTE	KILOMETER POST TOTAL PROJECT	SHEET NO.	TOTAL SHEETS
04	SF	80	13.2/13.9	629R4	1204

George Baker
REGISTERED ENGINEER - CIVIL
12-6-04
PLANS APPROVAL DATE

REGISTERED PROFESSIONAL ENGINEER George S. Baker No. C57112 Exp. 12/31/07 CIVIL STATE OF CALIFORNIA

The State of California or its officers or agents shall not be responsible for the accuracy or completeness of electronic copies of this plan sheet.

T.Y. LIN / MOFFATT & NICHOL
825 BATTERY STREET
SAN FRANCISCO, CA 94111

Caltrans now has a web site! To get to the web site, go to: http://www.dot.ca.gov

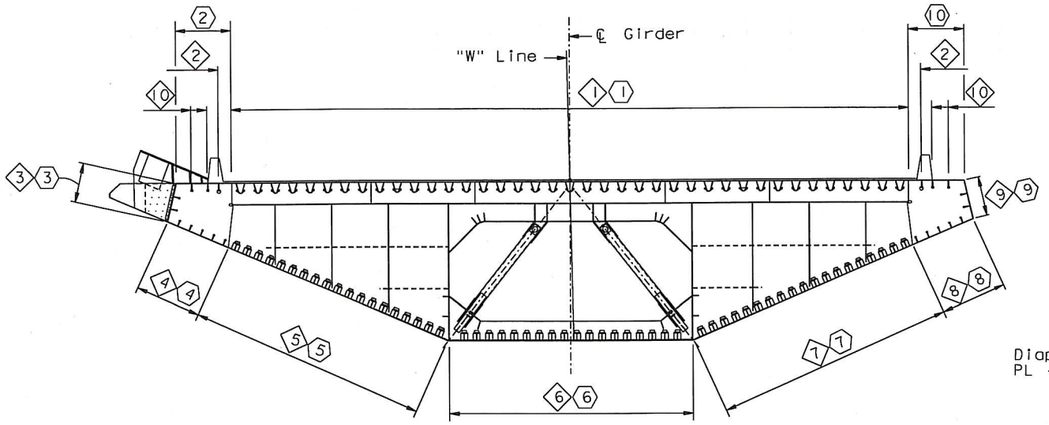

("W" LINE SECTION TYPE 1A SHOWN)

SECTION AT FLOORBEAM

1:100

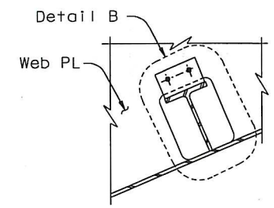

WT TYPE AT CROSSBEAM

7

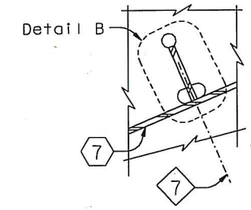

PLATE TYPE AT CROSSBEAM

7

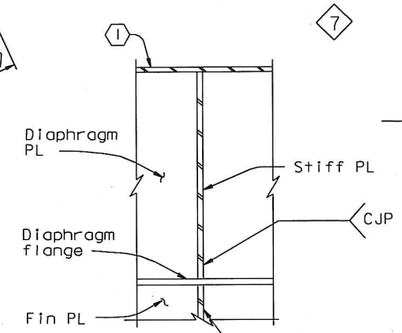

11 (see Note 4)

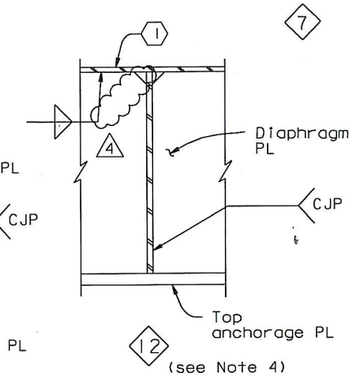

12 (see Note 4)

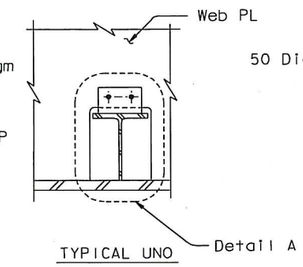

TYPICAL UNO

5 6 & 7 Except at crossbeam

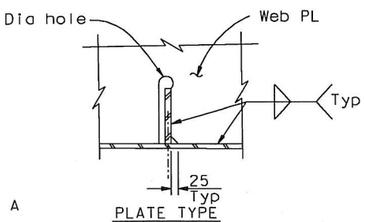

PLATE TYPE

5 6 & 7 Except at crossbeam

4 (see Note 7) 14 (optional)

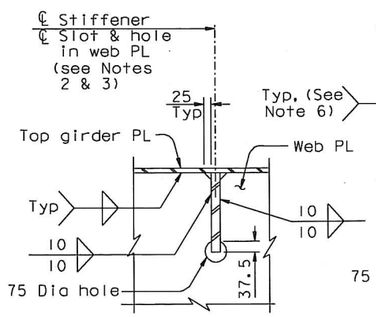

2

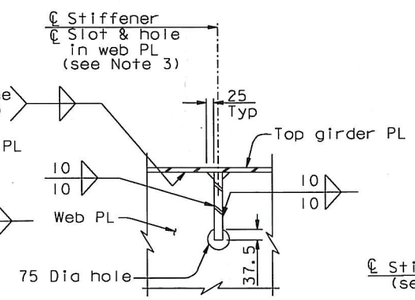

10, 13 thru 18

4 (see Note 8)

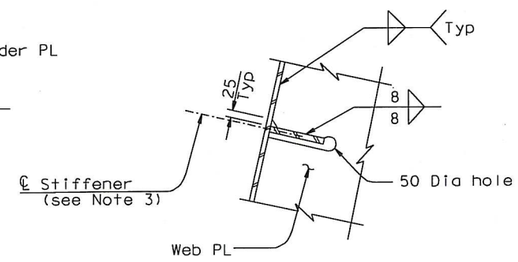

3 (see Note 5)

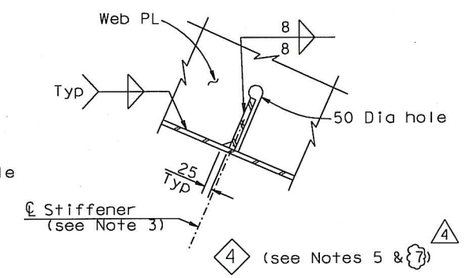

4 (see Notes 5 & 7)

4

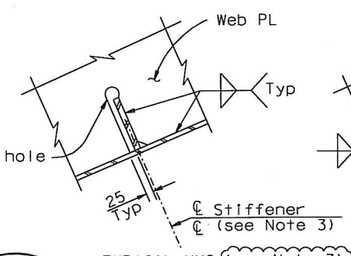

TYPICAL UNO (see Note 7)

4

8

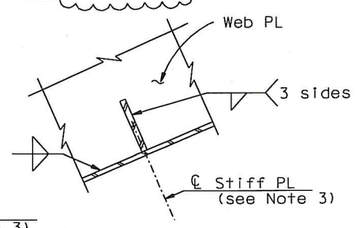

AT CROSSBEAM

8

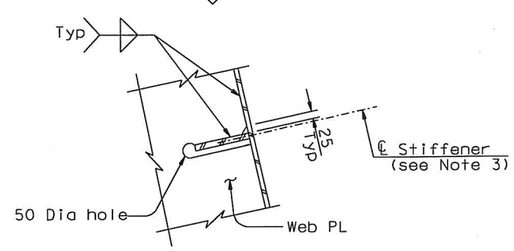

TYPICAL UNO

9

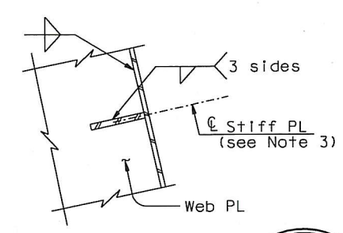

AT CROSSBEAM

9

STIFFENER DETAILS AT FLOORBEAM (See Note 3)

1:10

NOTES:

1. For Details A and B, see "Typical Girder Details No.6" sheet.
2. For details at PP117 to PP121, see "Girder at East Transition Details No.1" and "Girder At Pier E2 No.9" sheets.
3. All typical girder stiffeners are continuous through floorbeam web except for 8 and 9 at crossbeam, and 1 typically, and unless otherwise specified in the plans.
4. For locations of stiffener Types 1 thru 8, see "Girder at East Transition" sheets.
5. Typical details for 3 and 4 shown. For details at suspender location, see "Typical Girder Details No.6" sheet.
6. For welds at suspender brackets, see "Suspender Bracket Details No.1" sheet.
7. East of PP117, in lieu of floorbeam cut-out, PL stiffeners may be welded to the floorbeam webs using a CJP with a reinforcing fillet wrapped around at top and bottom of stiffener. Use of drop-in pieces is permitted, subject to review and approval of the Engineer. At splices, drop-in piece on same side as the splice shall extend from the floorbeam web to the splice. The Type 5 stiffener drop-in piece parallel to the Lines E13/W13 may be welded to the floorbeam web using CJP with backing bar to remain, subject to review and approval of the Engineer. 4
8. For alternative details for Type 13 stiffeners, see "Typical Girder Details No.6" sheet.

Daniel J. Turner
REGISTERED PROFESSIONAL ENGINEER Daniel J. Turner No. C 65033 Exp. 06/30/09 CIVIL STATE OF CALIFORNIA

FOR REVISIONS 2 & 3 ONLY

CONTRACT CHANGE ORDER NO. 87
SHEET 8 OF 115

REQUESTS FOR INFORMATION NOT ADDRESSED IN THIS CCO REMAIN IN FORCE

MARK	DATE	DESCRIPTIONS	BY	CH'D	CCO#
4	04/18/12	EAST END OBG	MN	GB	87
3	07/31/09	LONGITUDINAL SHEAR PLATE	GB	DT	122
2	02/20/09	SUSPENDER BRACKETS	GB	DT	104
1	07/26/06	ADD STIFFENER TYPES 13 THRU 18	GB	NV	22

REVISIONS

R. Vallzadeh/V. Toan/Y.L./W.L./F.C.
DESIGN OVERSIGHT
Roya Valizadeh / Vang Toan / Y. Liu
SIGN OFF DATE 04/18/12

Rev. Date: 5-18-98

DESIGN	BY G. Baker	CHECKED P. Ritchie	
DETAILS	BY S. Camo	CHECKED T. McMeans	
QUANTITIES	BY G. Baker	CHECKED M. Roberts	

PREPARED FOR THE STATE OF CALIFORNIA DEPARTMENT OF TRANSPORTATION

R. Manzanarez
PROJECT ENGINEER

ORIGINAL SCALE IN MILLIMETERS FOR REDUCED PLANS 0 10 20 30 40 50 60 70 80 90 100

CU 04
EA 0120F1

ALL DIMENSIONS ARE IN MILLIMETERS UNLESS OTHERWISE SHOWN

Marwan N. Nader
REGISTERED PROFESSIONAL ENGINEER Marwan N. Nader No. C 054426 Exp. 12/31/13 CIVIL STATE OF CALIFORNIA

FOR REVISION 4 ONLY

BRIDGE NO. 34-0006L/R
KILOMETER POST 13.2/13.9

SAN FRANCISCO OAKLAND BAY BRIDGE
EAST SPAN SEISMIC SAFETY PROJECT
SELF-ANCHORED SUSPENSION BRIDGE
(SUPERSTRUCTURE & TOWER)

TYPICAL GIRDER DETAILS NO. 5

DISREGARD PRINTS BEARING EARLIER REVISION DATES

REVISION DATES (PRELIMINARY STAGE ONLY) 01/15/99 05/13/99 08/02/99 05/31/01 01/08/02 07/01/02 12/13/02 11/13/05

SHEET 212R4 OF

100 % PS&E

USERNAME => DWinrow DATE PLOTTED => 18 APR 2012 TIME PLOTTED => 10:55:43

FILE => L:\BB\04-012001\SAS\Contract Plans and CCO\CCO\CCO#87\temp\aggdkd03a.dgn

DIST.	COUNTY	ROUTE	KILOMETER POST TOTAL PROJECT	SHEET NO.	TOTAL SHEETS
04	SF	80	13.2/13.9	630R2	1204

George Baker
REGISTERED ENGINEER - CIVIL
12-6-04
PLANS APPROVAL DATE

REGISTERED PROFESSIONAL ENGINEER George S. Baker No. C57112 Exp. 12/31/05 CIVIL STATE OF CALIFORNIA

The State of California or its officers or agents shall not be responsible for the accuracy or completeness of electronic copies of this plan sheet.

T.Y. LIN / MOFFATT & NICHOL
825 BATTERY STREET
SAN FRANCISCO, CA 94111

Caltrans now has a web site! To get to the web site, go to: http://www.dot.ca.gov

Caltrans Metric

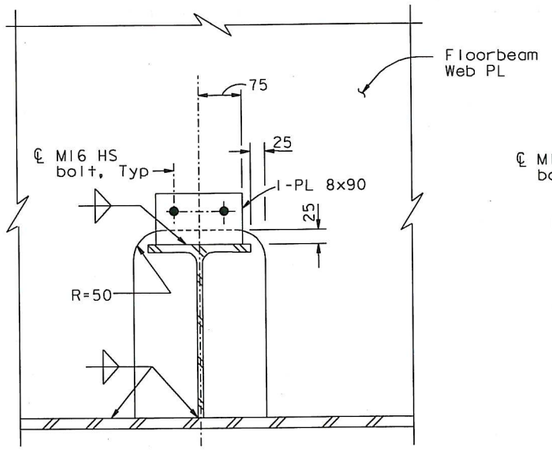

TYPE 1 OPENING

5 6 or 7 (see Note 1)

DETAIL A
1:5

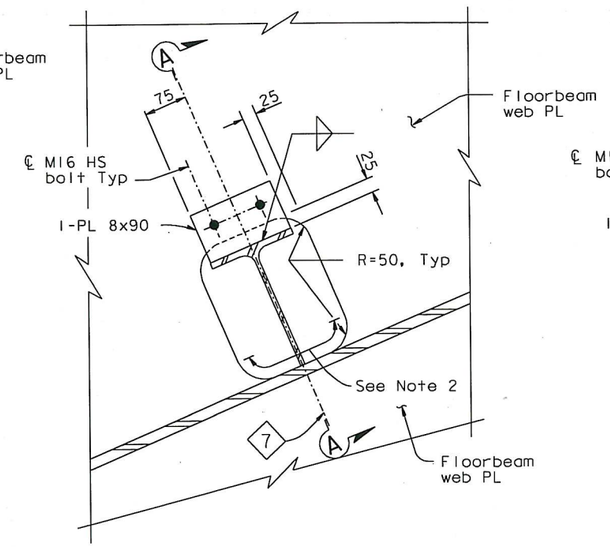

TYPE 2 OPENING, WT TYPE

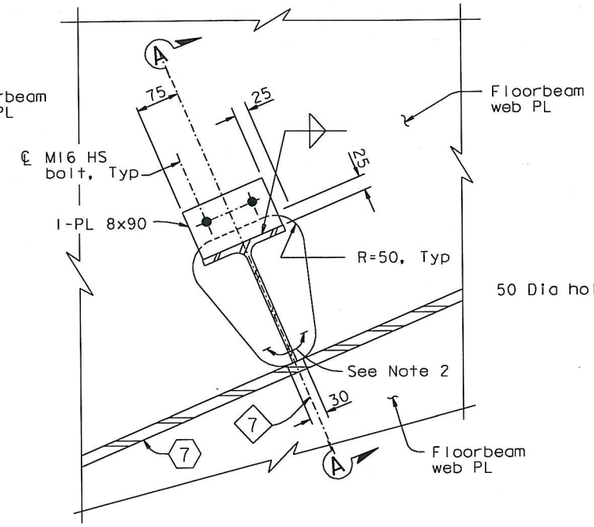

TYPE 3 OPENING, WT TYPE

7 AT CROSSBEAM (see Note 1)

DETAIL B
1:5

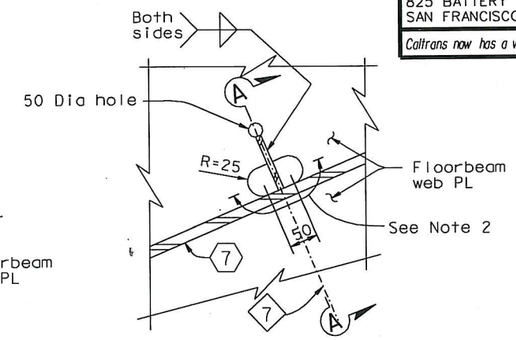

TYPE 2 & 3 OPENING, PLATE TYPE

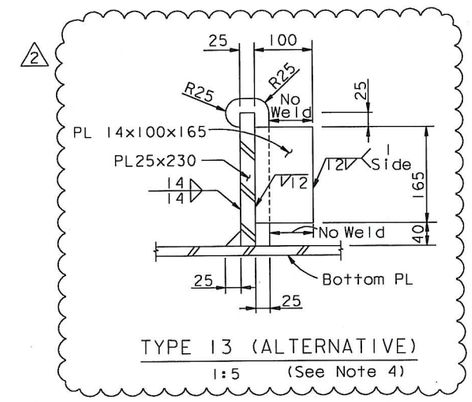

TYPE 13 (ALTERNATIVE)
1:5 (See Note 4)

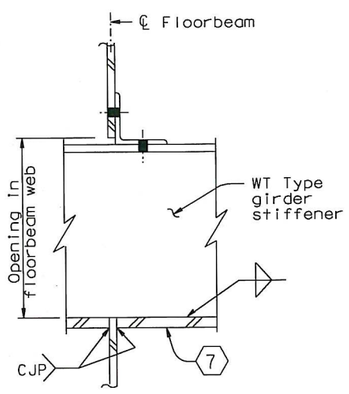

WT TYPE STIFFENER

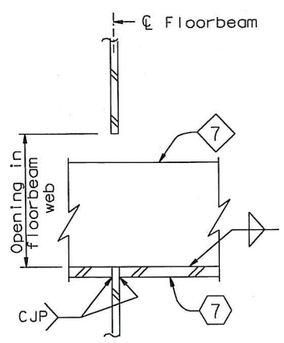

PLATE TYPE STIFFENER

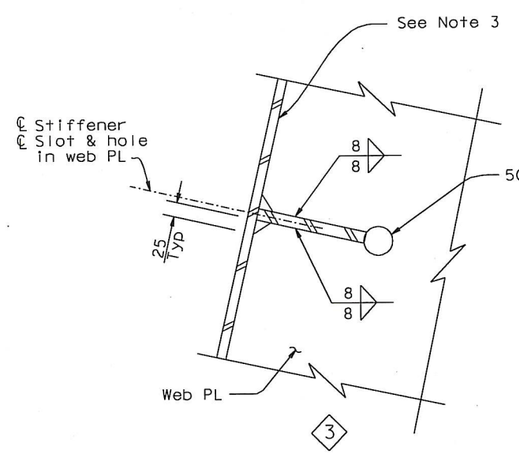

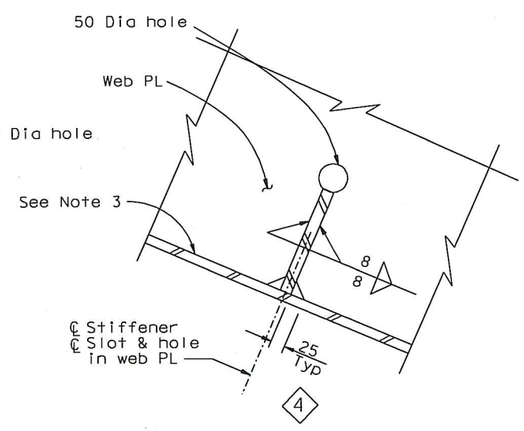

STIFFENER DETAILS AT SUSPENDER
1:5

NOTES:

1. For location of opening types, see "Typical Floorbeam Details No. 2" sheet.
2. For limits shown, finish surface of the cutout shall be have ANSI 500 roughness.
3. For welds at suspender brackets, see "Suspender Bracket Details No. 1" sheet.
4. Traveler rail connection bracket fill plates may be used as fit lugs. (2)

REGISTERED PROFESSIONAL ENGINEER Marwan N. Nader No. C 054426 Exp. 12/31/13 CIVIL STATE OF CALIFORNIA

FOR REVISIONS ONLY

SECTION A-A
1:5

CONTRACT CHANGE ORDER NO. 87
SHEET 9 OF 115

REQUESTS FOR INFORMATION NOT ADDRESSED IN THIS CCO REMAIN IN FORCE

ALL DIMENSIONS ARE IN MILLIMETERS UNLESS OTHERWISE SHOWN

R. Valizadeh/V. Toan/Y.L./W.L./F.C.
DESIGN OVERSIGHT
Roya Valizadeh / Vong D. Toan / Y. Liu
SIGN OFF DATE 04/18/12

MARK	DATE	DESCRIPTIONS	BY	CH'D	CCO#
2	04/18/12	EAST END OBG	MN	GB	87
1	02/20/09	SUSPENDER BRACKETS	GB	DT	104

REVISIONS

	BY	CHECKED
DESIGN	G. Baker	P. Ritchie
DETAILS	S. Como	T. McMeans
QUANTITIES	G. Baker	M. Roberts

PREPARED FOR THE STATE OF CALIFORNIA DEPARTMENT OF TRANSPORTATION

R. Manzanarez
PROJECT ENGINEER

BRIDGE NO. 34-0006L/R
KILOMETER POST 13.2/13.9

SAN FRANCISCO OAKLAND BAY BRIDGE
EAST SPAN SEISMIC SAFETY PROJECT
SELF-ANCHORED SUSPENSION BRIDGE
(SUPERSTRUCTURE & TOWER)

TYPICAL GIRDER DETAILS NO. 6

Rev. Date: 5-18-98

ORIGINAL SCALE IN MILLIMETERS FOR REDUCED PLANS 0 10 20 30 40 50 60 70 80 90 100

CU 04
EA 0120F1

DISREGARD PRINTS BEARING EARLIER REVISION DATES
REVISION DATES (PRELIMINARY STAGE ONLY) 01/15/99 05/15/99 08/02/99 05/24/01 04/26/02 07/09/02 12/19/02

SHEET 213R2 OF

FILE => I:\bb\04-012001\sas\contract plans and cco\cco\cco#87\temp\agdkd03b.dgn

100 % PS&E

USERNAME => DWinrow DATE PLOTTED => 18 APR 2012 TIME PLOTTED => 10:56:50

DIST.	COUNTY	ROUTE	KILOMETER POST TOTAL PROJECT	SHEET NO.	TOTAL SHEETS
04	SF	80	13.2/13.9	631R3	1204

Caltrans now has a web site! To get to the web site, go to: http://www.dot.ca.gov

Caltrans Metric

George Baker
REGISTERED ENGINEER - CIVIL

12-6-04
PLANS APPROVAL DATE

REGISTERED PROFESSIONAL ENGINEER George S. Baker No. C57112 Exp. 12/31/05 CIVIL STATE OF CALIFORNIA

The State of California or its officers or agents shall not be responsible for the accuracy or completeness of electronic copies of this plan sheet.

T.Y. LIN / MOFFATT & NICHOL
825 BATTERY STREET
SAN FRANCISCO, CA 94111

OPENING LOCATION TABLE

SHEAR PLATE TYPE	WORKING LINE	PANEL POINT (see Note 5)
2	E3, W3	8.5 (East), 9.5, 10.5, 11.5, 12.5, 13.5, 112.5, 113.5, 114.5
2	E4, W4	8.5 (East), 9.5, 10.5, 11.5, 12.5, 13.5, 112.5, 113.5, 114.5

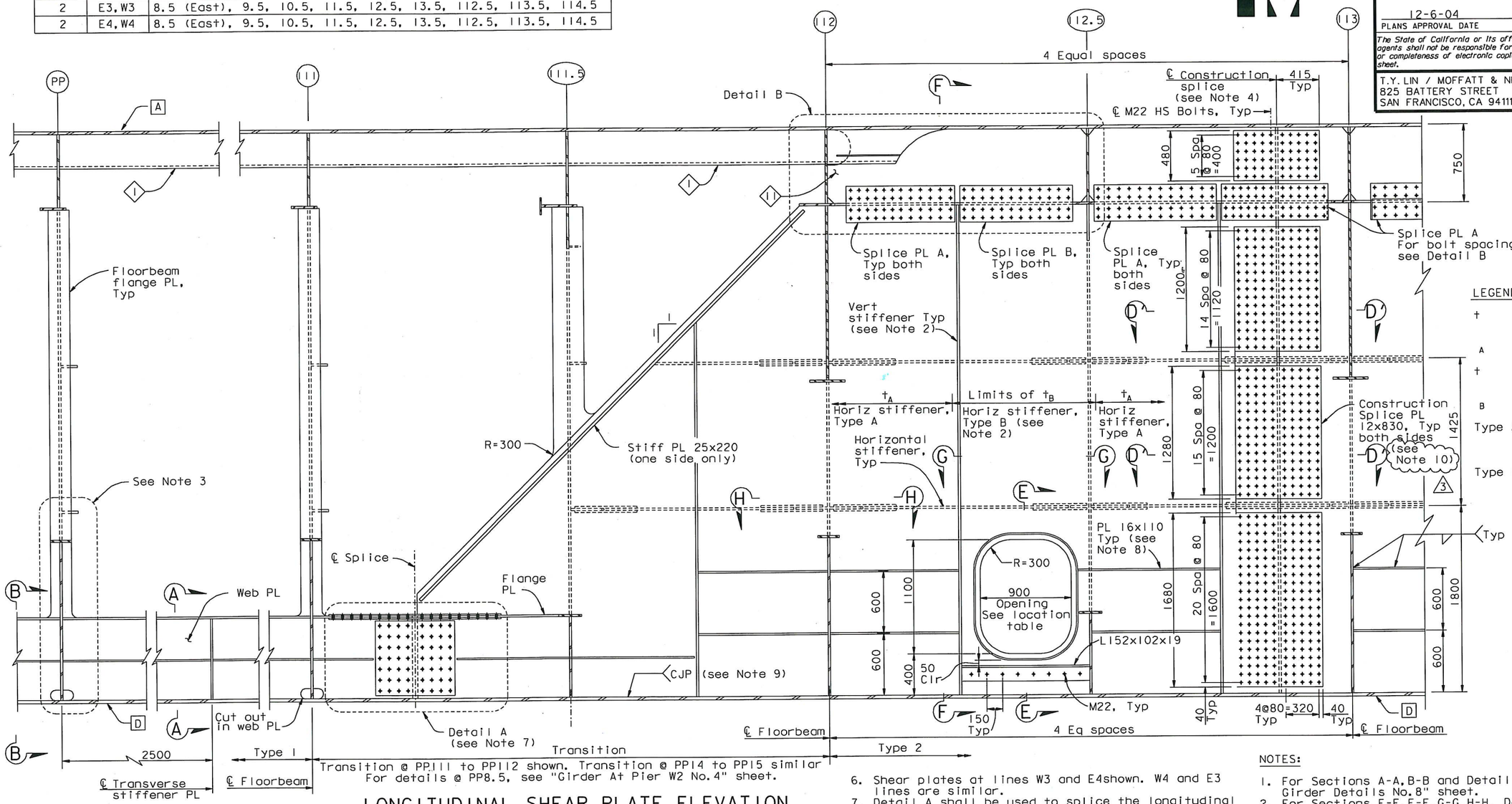

LONGITUDINAL SHEAR PLATE ELEVATION

1:20

LEGEND:

- t — Typical thickness of longitudinal shear PL Type 2 (see Notes 2 and 5)
- t A — Thickness of long shear PL Type 2 strip with opening (see Notes 2 and 5)
- Type A — Typical horizontal stiffener size (see Note 5)
- Type B — Horizontal stiffener in strip with opening (see Note 5)

NOTES:

1. For Sections A-A, B-B and Detail A, see "Typical Girder Details No.8" sheet.
2. For Sections E-E, F-F, G-G, H-H, Detail B and details not shown, see "Typical Girder Details No.9" sheet.
3. For floorbeam details, see "Typical Floorbeam Details" sheets.
4. For location of girder splice, see "Girder Framing Plan" sheets.
5. For plate sizes and openings in east transition, see "Girder At East Transition No.9" sheet.
6. Shear plates at lines W3 and E4 shown. W4 and E3 lines are similar.
7. Detail A shall be used to splice the longitudinal shear PL Type 1 at box girder splice locations.
8. Lower panel stiffeners shall be placed as shown in Longitudinal shear PL along E3, E4, W3 and W4 lines from PP111.75 to the E2 floorbeam, and from the E2 floorbeam to PP120. Stiffeners shall also be placed along E4 and W4 lines from PP120 to 127. For details at the E2 floorbeam, see "Girder at Pier E2 No.2" sheet.
9. The longitudinal shear PL to girder face "D" weld shall be a CJP from the CL plice near PP111 to PP128.7.
10. (3) The thickness of the construction splice PL shall match the thickness of splice PL A.

ALL DIMENSIONS ARE IN MILLIMETERS UNLESS OTHERWISE SHOWN

Daniel J. Turner
REGISTERED PROFESSIONAL ENGINEER Daniel J. Turner No. C 65033 Exp. 06/30/13 CIVIL STATE OF CALIFORNIA

FOR REVISIONS ONLY

CONTRACT CHANGE ORDER NO. 87
SHEET 10 OF 115

REQUESTS FOR INFORMATION NOT ADDRESSED IN THIS CCO REMAIN IN FORCE

MARK	DATE	DESCRIPTIONS	BY	CH'D	CCO#
3	09/01/11	EAST END OBG	DT	GB	87
2	07/31/09	LONGITUDINAL SHEAR PLATE	DT	GB	122
1	07/30/07	HINGE A REACTION-SHEAR PLATES	DT	GB	50

REVISIONS

R. Valizadeh/V. Toan/Y.L./W.L./F.C.
DESIGN OVERSIGHT
Roya Valizadeh / Vong Toan / Y. Liu
SIGN OFF DATE 09/01/11

Rev. Date: 5-18-98

DESIGN	BY G. Baker	CHECKED P. Ritchie	
DETAILS	BY S. Camo	CHECKED T. McMeans	
QUANTITIES	BY G. Baker	CHECKED M. Roberts	

PREPARED FOR THE STATE OF CALIFORNIA DEPARTMENT OF TRANSPORTATION

R. Manzanarez
PROJECT ENGINEER

BRIDGE NO. 34-0006L/R
KILOMETER POST 13.2/13.9

CU 04
EA 0120F1

SAN FRANCISCO OAKLAND BAY BRIDGE
EAST SPAN SEISMIC SAFETY PROJECT
SELF-ANCHORED SUSPENSION BRIDGE
(SUPERSTRUCTURE & TOWER)

TYPICAL GIRDER DETAILS NO. 7

DISREGARD PRINTS BEARING EARLIER REVISION DATES

REVISION DATES (PRELIMINARY STAGE ONLY): 01/31/99 05/31/99 09/30/99 05/31/01 09/30/02 01/31/02 12/19/02

SHEET 214R3 OF

ORIGINAL SCALE IN MILLIMETERS FOR REDUCED PLANS 0 10 20 30 40 50 60 70 80 90 100

FILE => I:\bb\04-01200I\sas\contract plans and cco\cco\cco#87\I-original 09-01-11\dgn\agdkd04.dgn

100 % PS&E

DATE PLOTTED => 30 AUG 2011 TIME PLOTTED => 11:05:41

USERNAME => PTom

DIST.	COUNTY	ROUTE	KILOMETER POST TOTAL PROJECT	SHEET NO.	TOTAL SHEETS
04	SF	80	13.2/13.9	632R1	1204

George Baker
REGISTERED ENGINEER - CIVIL
12-6-04
PLANS APPROVAL DATE

REGISTERED PROFESSIONAL ENGINEER George S. Baker No. C57112 Exp. 12/31/05 CIVIL STATE OF CALIFORNIA

The State of California or its officers or agents shall not be responsible for the accuracy or completeness of electronic copies of this plan sheet.

T.Y. LIN / MOFFATT & NICHOL
825 BATTERY STREET
SAN FRANCISCO, CA 94111

Caltrans now has a web site! To get to the web site, go to: http://www.dot.ca.gov

Caltrans Metric

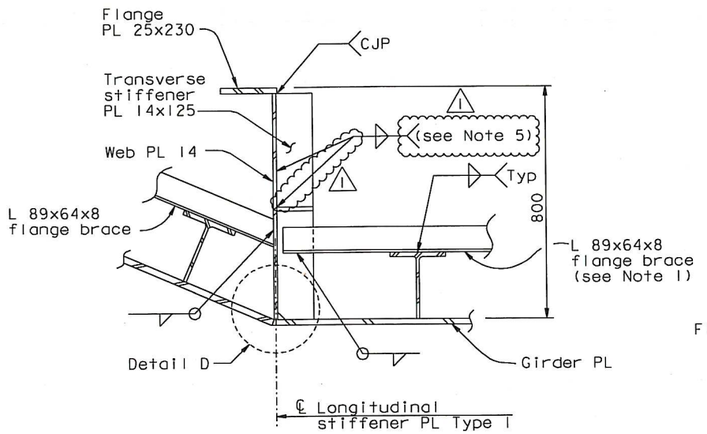

SECTION A-A
1:10

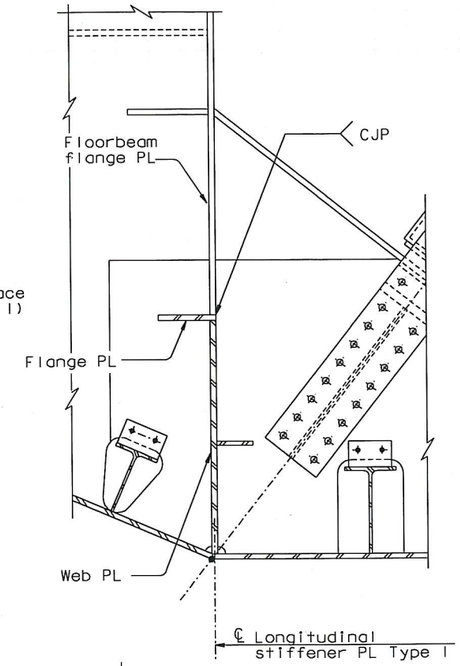

SECTION B-B
1:10

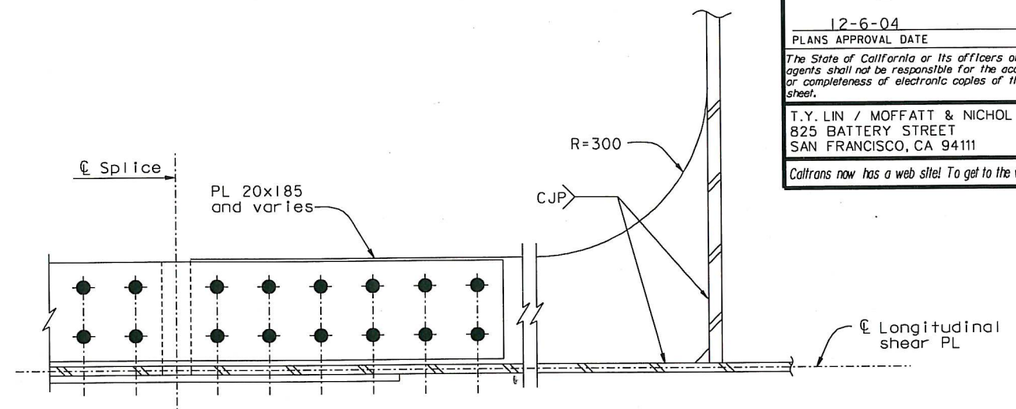

SECTION D-D
1:5

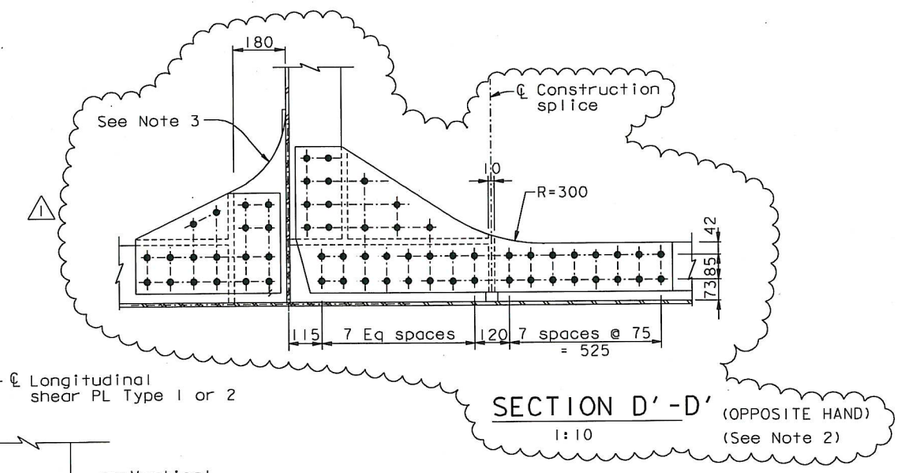

SECTION D'-D' (OPPOSITE HAND)
1:10
(See Note 2)

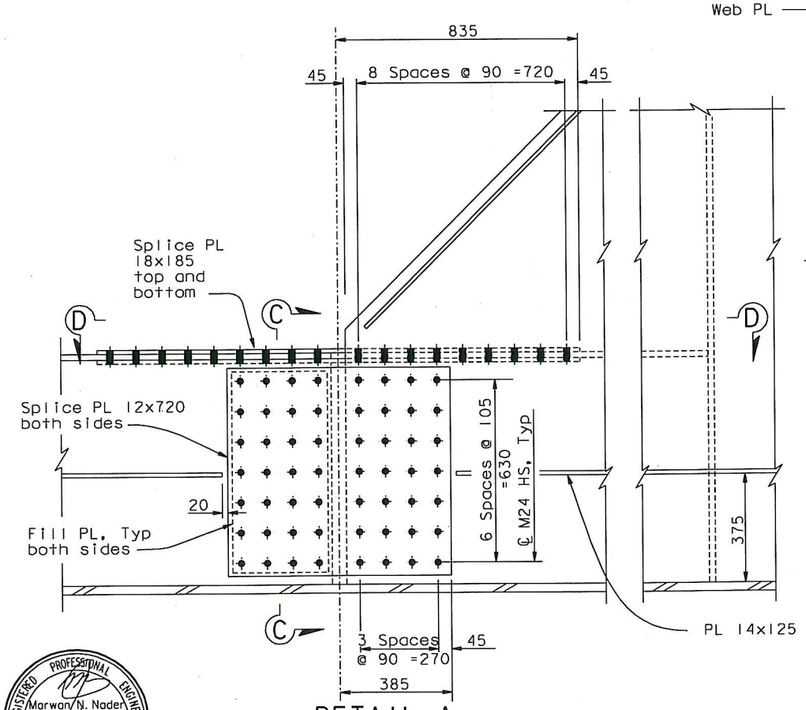

DETAIL A
1:10

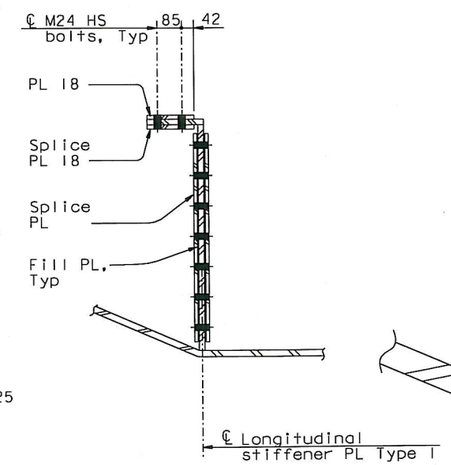

SECTION C-C
1:10

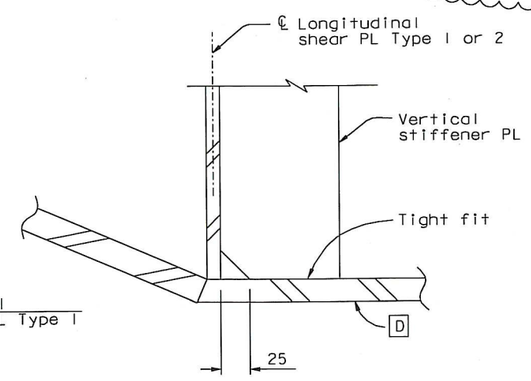

DETAIL D
1:2.5

NOTES:

1. Flange braces shall be placed between intermediate bulkheads from PP15.5 to PP110.5. See "Girder Framing Details No.2" sheet for typical locations.
2. For stiffener splice details not shown, see "Typical Girder Details No.10" sheet.
3. Plate thickness shall match the Horizontal stiffener on the Longitudinal Shear PL Type 2.
4. At the bolted splice, add fill plates as required.
5. At the east transition, it is acceptable to use a CJP with backing to weld the horizontal PL14x125 stiffener to the Longitudinal Shear PL Type 1.

ALL DIMENSIONS ARE IN MILLIMETERS UNLESS OTHERWISE SHOWN

Marwan N. Nader
REGISTERED PROFESSIONAL ENGINEER No. C 054426 Exp. 12/31/13 CIVIL STATE OF CALIFORNIA

FOR REVISIONS ONLY

CONTRACT CHANGE ORDER NO. 87
SHEET 11 OF 115

REQUESTS FOR INFORMATION NOT ADDRESSED IN THIS CCO REMAIN IN FORCE

MARK	DATE	DESCRIPTIONS	BY	CH'D	CCO#
1	04/18/12	EAST END OBG	MN	GB	87

REVISIONS

R. Vallizadeh/V. Toan/Y.L./W.L./F.C.
DESIGN OVERSIGHT
SIGN OFF DATE 04/18/12

DESIGN	BY G. Baker	CHECKED	P. Ritchie
DETAILS	BY S. Camo	CHECKED	T. McMeans
QUANTITIES	BY G. Baker	CHECKED	M. Roberts

PREPARED FOR THE STATE OF CALIFORNIA DEPARTMENT OF TRANSPORTATION

R. Manzanarez
PROJECT ENGINEER

BRIDGE NO. 34-0006L/R
KILOMETER POST 13.2/13.9

SAN FRANCISCO OAKLAND BAY BRIDGE
EAST SPAN SEISMIC SAFETY PROJECT
SELF-ANCHORED SUSPENSION BRIDGE
(SUPERSTRUCTURE & TOWER)

TYPICAL GIRDER DETAILS NO. 8

Rev. Date: 5-18-98

ORIGINAL SCALE IN MILLIMETERS FOR REDUCED PLANS 0 10 20 30 40 50 60 70 80 90 100

CU 04
EA 0120F1

DISREGARD PRINTS BEARING EARLIER REVISION DATES

REVISION DATES (PRELIMINARY STAGE ONLY) 05/13/99 08/02/99 05/23/01 04/05/02 07/01/02 12/19/02

SHEET 215R1 OF

FILE => I:\bb\04-012001\sas\contract plans and cco\cco\cco#87\temp\agdkd05.dgn

USERNAME => DWinrow DATE PLOTTED => 18 APR 2012 TIME PLOTTED => 10:57:53

100 % PS&E

DIST.	COUNTY	ROUTE	KILOMETER POST TOTAL PROJECT	SHEET NO.	TOTAL SHEETS
04	SF	80	13.2/13.9	633R3	1204

George Baker
REGISTERED ENGINEER - CIVIL
12-6-04
PLANS APPROVAL DATE

REGISTERED PROFESSIONAL ENGINEER George S. Baker No. C57112 Exp. 12/31/05 CIVIL STATE OF CALIFORNIA

The State of California or its officers or agents shall not be responsible for the accuracy or completeness of electronic copies of this plan sheet.

T.Y. LIN / MOFFATT & NICHOL
825 BATTERY STREET
SAN FRANCISCO, CA 94111

Caltrans now has a web site! To get to the web site, go to: http://www.dot.ca.gov

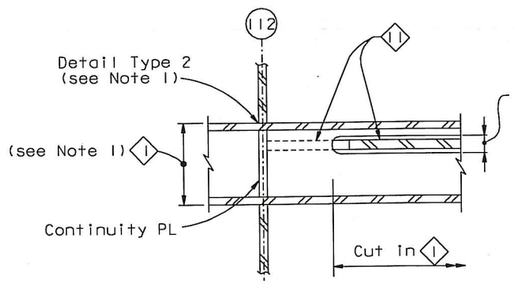

SECTION K-K
1:5

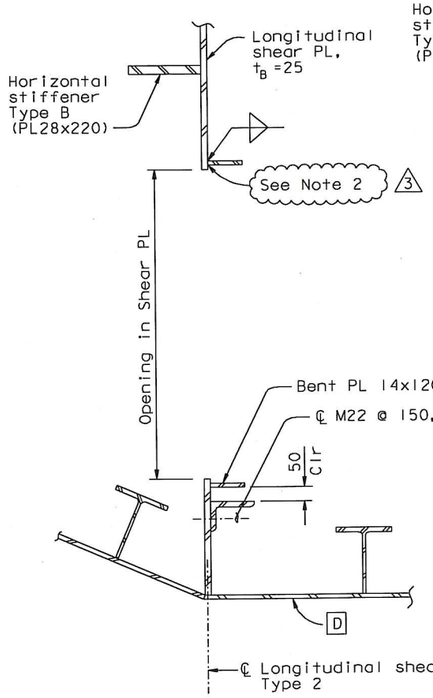

SECTION E-E
1:10

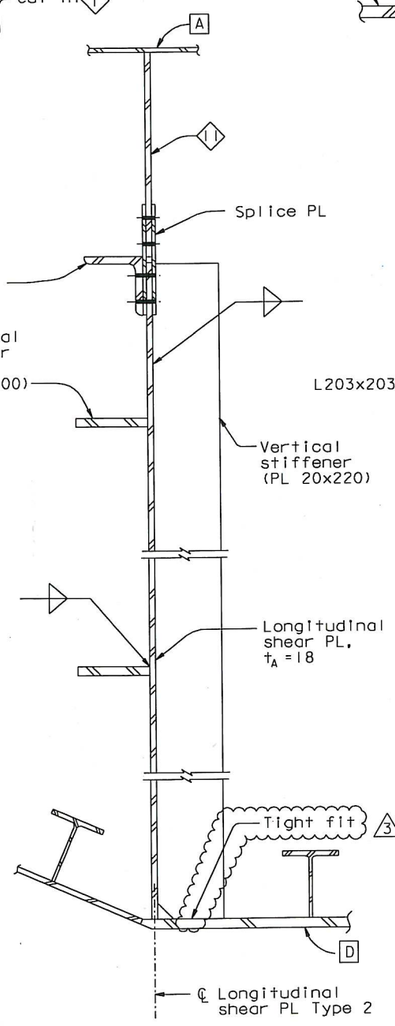

SECTION F-F
1:10

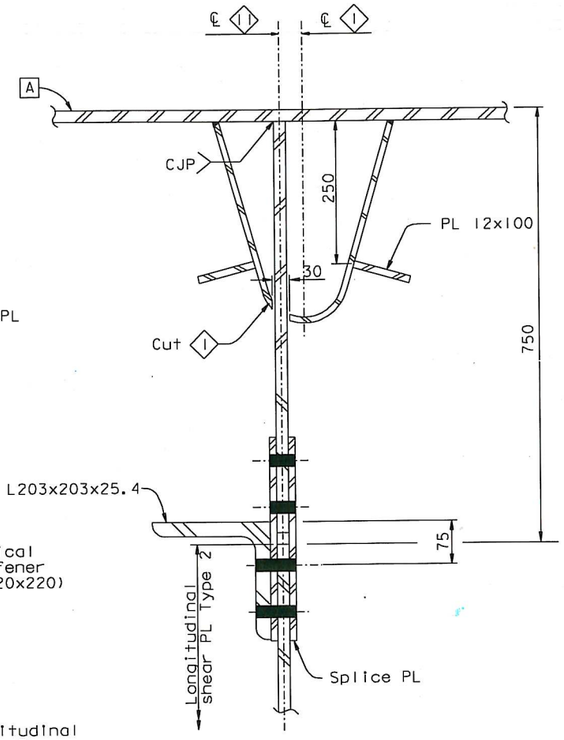

SECTION J-J
1:5

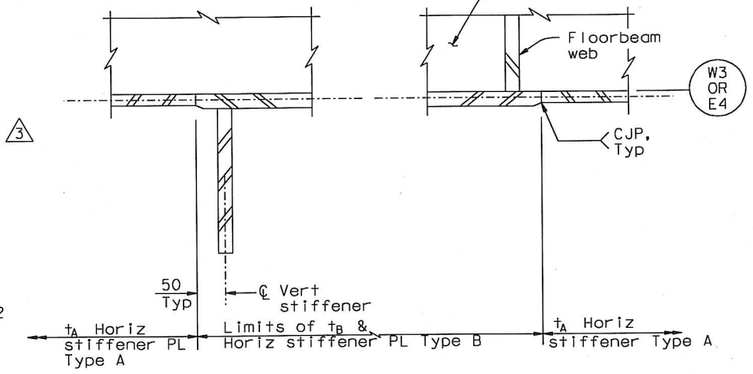

SECTION G-G
1:5

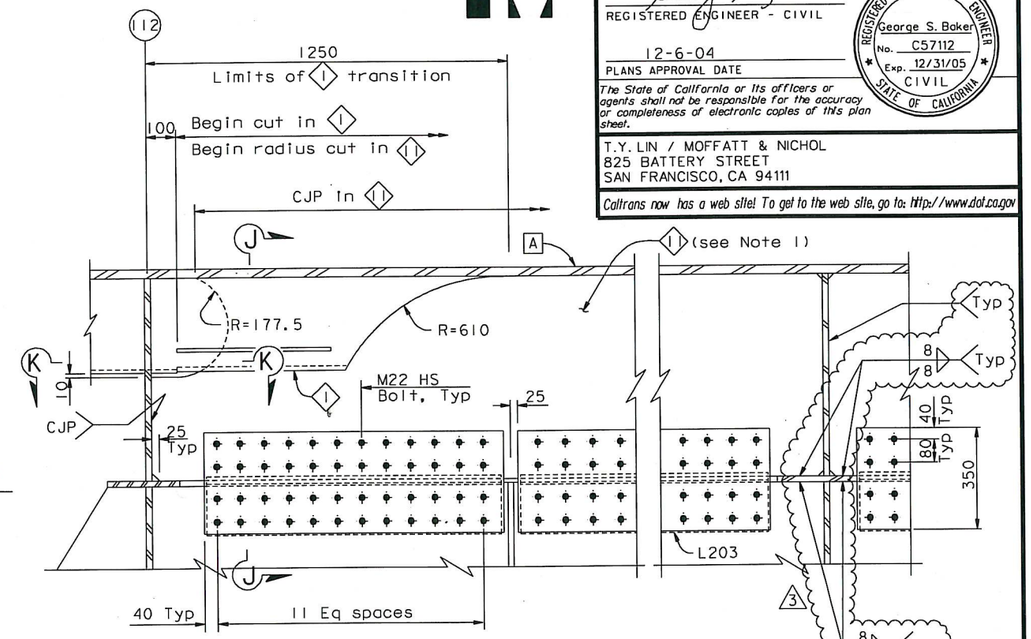

TRANSITION @ PP112 SHOWN
PP14 SIMILAR

DETAIL B
1:10

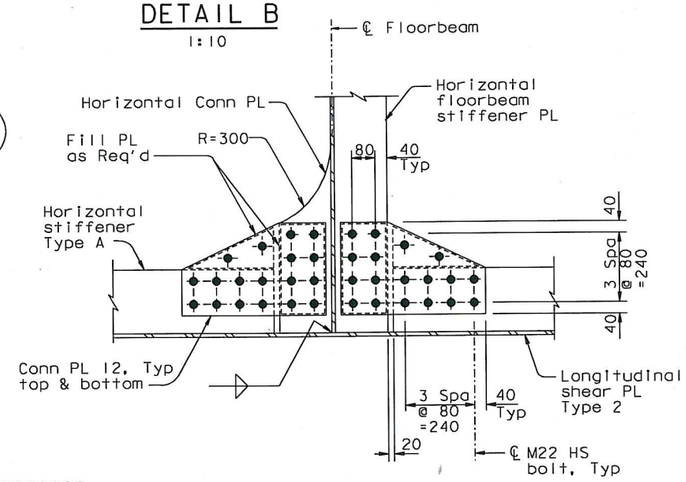

HORIZONTAL CONNECTION PLATE DETAIL

SECTION H-H
1:10

NOTES:

1. For details of 1 and 11, see "Typical Girder Details No. 3" and "Typical Girder Details No. 4" sheets.
2. Where access opening flange is within 100 mm of web stiffeners, a single PJP (10) may be used in lieu of the double fillet weld, subject to review and approval of the Engineer. Flange is not required within 50 mm of web stiffeners.

ALL DIMENSIONS ARE IN MILLIMETERS UNLESS OTHERWISE SHOWN

REGISTERED PROFESSIONAL ENGINEER Marwan N. Nader No. C 054426 Exp. 12/31/13 CIVIL STATE OF CALIFORNIA

FOR REVISIONS ONLY

CONTRACT CHANGE ORDER NO. 87
SHEET 12 OF 115

REQUESTS FOR INFORMATION NOT ADDRESSED IN THIS CCO REMAIN IN FORCE

MARK	DATE	DESCRIPTIONS	BY	CH'D	CCO#
3	04/18/12	EAST END OBG	MN	GB	87
2	07/31/09	LONGITUDINAL SHEAR PLATE	DT	GB	122
1	07/30/07	HINGE A REACTION-SHEAR PLATES	DT	GB	50

REVISIONS

R. Vallizadeh/V. Toan/Y.L./W.L./F.C.
DESIGN OVERSIGHT
SIGN OFF DATE 04/18/12

Rev. Date: 5-18-98

DESIGN	BY G. Baker	CHECKED P. Ritchie	
DETAILS	BY S. Camo	CHECKED T. McMeans	
QUANTITIES	BY G. Baker	CHECKED M. Roberts	

PREPARED FOR THE STATE OF CALIFORNIA DEPARTMENT OF TRANSPORTATION

R. Manzanarez
PROJECT ENGINEER

BRIDGE NO. 34-0006L/R
KILOMETER POST 13.2/13.9

SAN FRANCISCO OAKLAND BAY BRIDGE
EAST SPAN SEISMIC SAFETY PROJECT
SELF-ANCHORED SUSPENSION BRIDGE
(SUPERSTRUCTURE & TOWER)

TYPICAL GIRDER DETAILS NO. 9

ORIGINAL SCALE IN MILLIMETERS FOR REDUCED PLANS 0 10 20 30 40 50 60 70 80 90 100

CU 04
EA 0120F1

DISREGARD PRINTS BEARING EARLIER REVISION DATES
REVISION DATES (PRELIMINARY STAGE ONLY) 05/27/01 04/08/02 07/09/02 12/19/02

SHEET 216R3 OF

FILE => I:\bb\04-0120F1\sas\contract plans and cco\cco\cco#87\temp\gdkd05a.dgn

USERNAME => DWinrow DATE PLOTTED => 18 APR 2012 TIME PLOTTED => 10:58:55

100 % PS&E

DIST.	COUNTY	ROUTE	KILOMETER POST TOTAL PROJECT	SHEET NO.	TOTAL SHEETS
04	SF	80	13.2/13.9	633S1	1204

REGISTERED ENGINEER - CIVIL

04-18-12

PLANS APPROVAL DATE

REGISTERED PROFESSIONAL ENGINEER Marwan N. Nader No. C 054426 Exp. 12/31/13 CIVIL STATE OF CALIFORNIA

The State of California or its officers or agents shall not be responsible for the accuracy or completeness of electronic copies of this plan sheet.

T.Y. LIN / MOFFATT & NICHOL
825 BATTERY STREET
SAN FRANCISCO, CA 94111

Caltrans now has a web site! To get to the web site, go to: http://www.dot.ca.gov

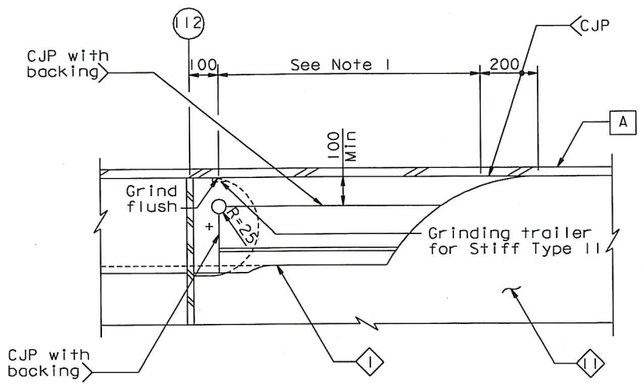

OPTION 1

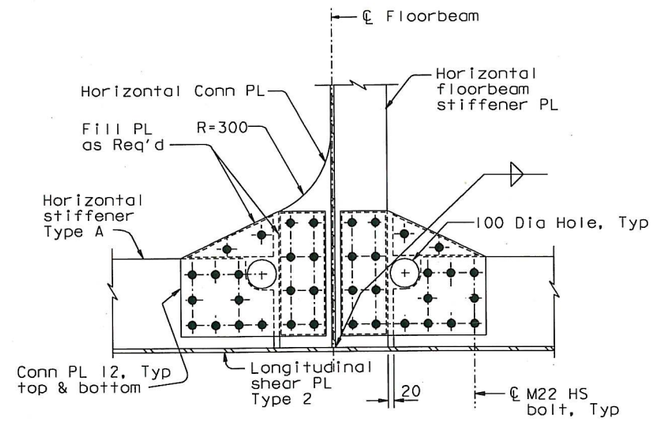

ALTERNATIVE 1

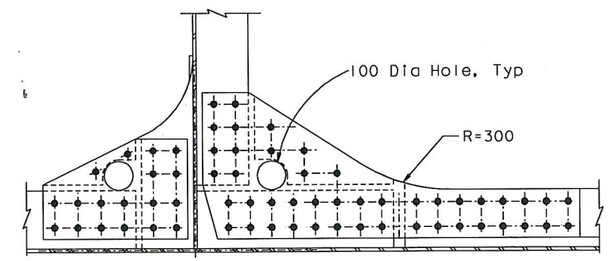

ALTERNATE SECTION D'-D'
1:10

(OPPOSITE HAND)
(See Note 2)

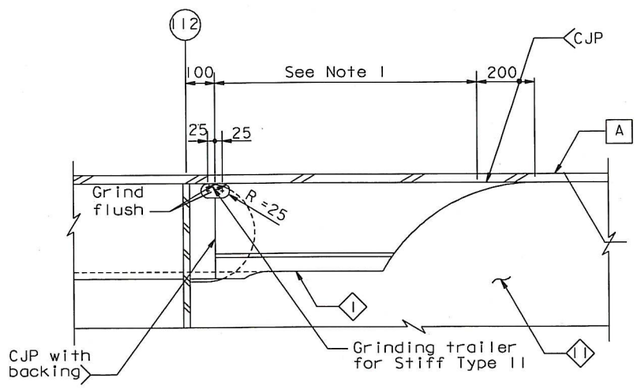

OPTION 2

TRANSITION @ PP112 SHOWN
PP14 SIMILAR

ALTERNATE RIB TRANSITION DETAIL
1:10

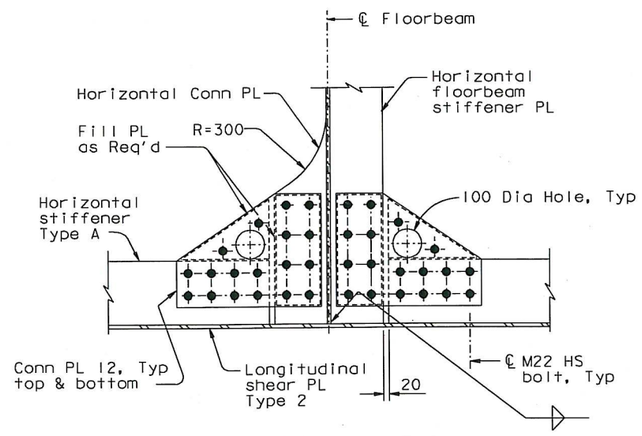

ALTERNATIVE 2

HORIZONTAL CONNECTION PLATE DETAIL

ALTERNATE SECTION H-H
1:10

NOTES:

1. Manual welding in this zone is acceptable, subject to review and approval of the Engineer
2. To accommodate the Contractor's lifting rods, the Contractor may use alternative Sections D'-D' and H-H to accommodate temporary lifting rods. Holes for lifting rods may remain provided all edge sealing requirements are satisfied by the bolts layout.

CONTRACT CHANGE ORDER NO. 87
SHEET 13 OF 115

REQUESTS FOR INFORMATION NOT ADDRESSED IN THIS CCO REMAIN IN FORCE

ALL DIMENSIONS ARE IN MILLIMETERS UNLESS OTHERWISE SHOWN

R. Valizadeh/V. Toan/Y.L./W.L./F.C.
DESIGN OVERSIGHT
SIGN OFF DATE 04/18/12

MARK	DATE	DESCRIPTIONS	BY	CH'D	CCO#
0	04/18/12	EAST END OBG	GB	MN	87

REVISIONS

DESIGN	BY G. Baker	CHECKED M. Nader	
DETAILS	BY G. Baker	CHECKED D. Turner	
QUANTITIES	BY G. Baker	CHECKED D. Turner	

PREPARED FOR THE STATE OF CALIFORNIA DEPARTMENT OF TRANSPORTATION

R. Manzanarez
PROJECT ENGINEER

BRIDGE NO. 34-0006L/R
KILOMETER POST 13.2/13.9

SAN FRANCISCO OAKLAND BAY BRIDGE
EAST SPAN SEISMIC SAFETY PROJECT
SELF-ANCHORED SUSPENSION BRIDGE
(SUPERSTRUCTURE & TOWER)

TYPICAL GIRDER DETAILS NO. 9A

Rev. Date: 5-18-98

ORIGINAL SCALE IN MILLIMETERS FOR REDUCED PLANS 0 10 20 30 40 50 60 70 80 90 100

CU 04
EA 0120F1

DISREGARD PRINTS BEARING EARLIER REVISION DATES 04/18/12

REVISION DATES (PRELIMINARY STAGE ONLY)

SHEET 216S1 OF

FILE => I:\bb\04-012001\sas\contract plans and cco\cco\cco#87\temp\agdkd04b.dgn

USERNAME => DWinrow DATE PLOTTED => 18 APR 2012 TIME PLOTTED => 10:59:52

100 % PS&E

DIST.	COUNTY	ROUTE	KILOMETER POST TOTAL PROJECT	SHEET NO.	TOTAL SHEETS
04	SF	80	13.2/13.9	634R1	1204

Caltrans Metric

George Baker
REGISTERED ENGINEER - CIVIL
12-6-04
PLANS APPROVAL DATE

REGISTERED PROFESSIONAL ENGINEER George S. Baker No. C57112 Exp. 12/31/05 CIVIL STATE OF CALIFORNIA

The State of California or its officers or agents shall not be responsible for the accuracy or completeness of electronic copies of this plan sheet.

T.Y. LIN / MOFFATT & NICHOL
825 BATTERY STREET
SAN FRANCISCO, CA 94111

Caltrans now has a web site! To get to the web site, go to: http://www.dot.ca.gov

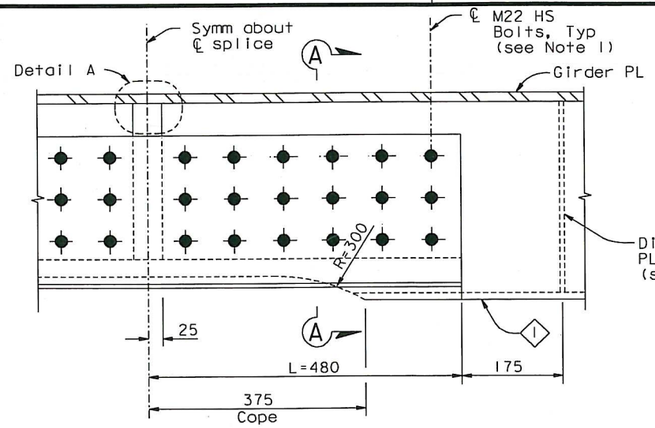

AT RIB STIFFENER TYPE 1 (See Note 5)
1:5

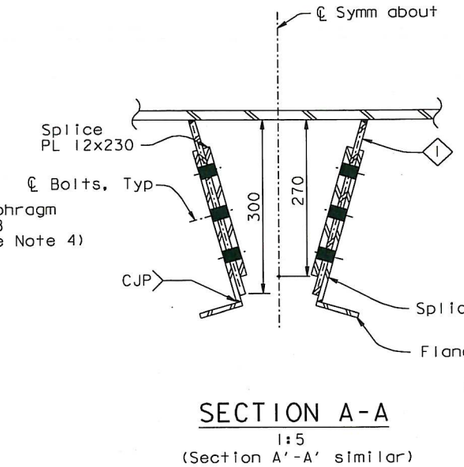

SECTION A-A
1:5
(Section A'-A' similar)

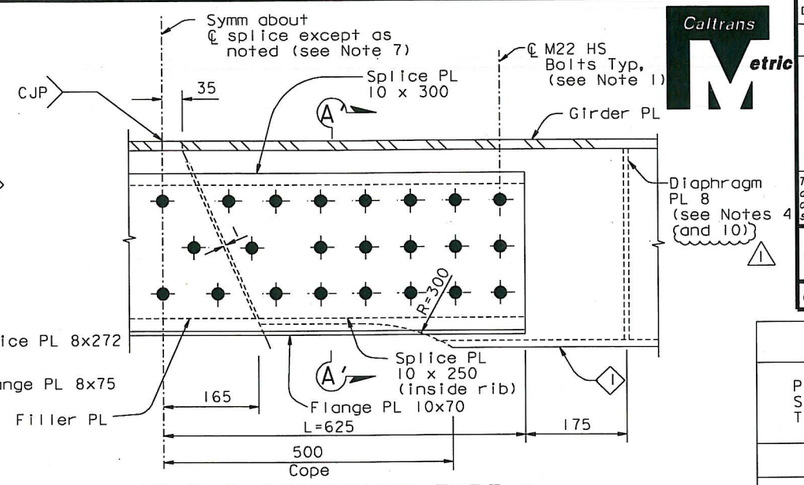

AT RIB STIFFENER TYPE 1 (See Note 6)
1:5

STIFFENER SPLICE TABLE 1				
PLATE STIFFENER THICKNESS †	SPLICE PLATE		HS BOLT	
	PLATE SIZE	L	N	SIZE
14	8 x 120	555	7	M22
16	14 x 100	620	7	M24
18 (depth 155)	14 x 140	650	12	M22
18 (depth 170)	12 x 155	475	12	M22
20	14 x 155	555	14	M22
22	18 x 150	565	16	M22
25	18 x 215	500	21	M22
28	18 x 245	565	21	M24
30	NA - See Table 2			
35	NA - See Table 2			

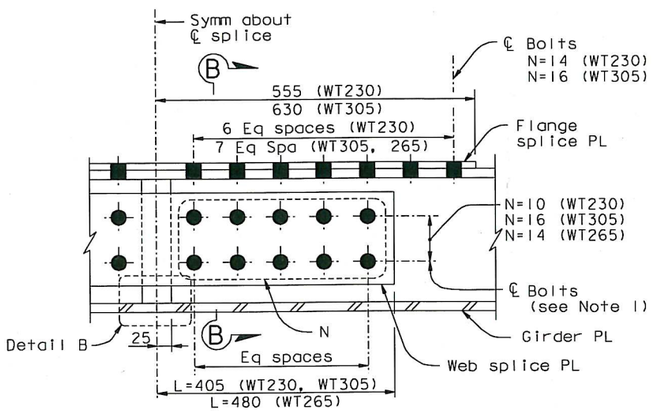

AT WT STIFFENER (See Notes 2 & 9)
1:5

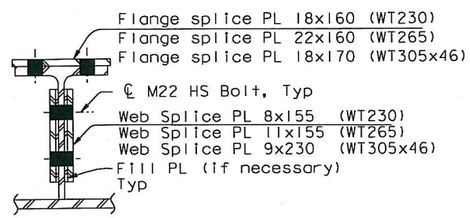

SECTION B-B
1:5

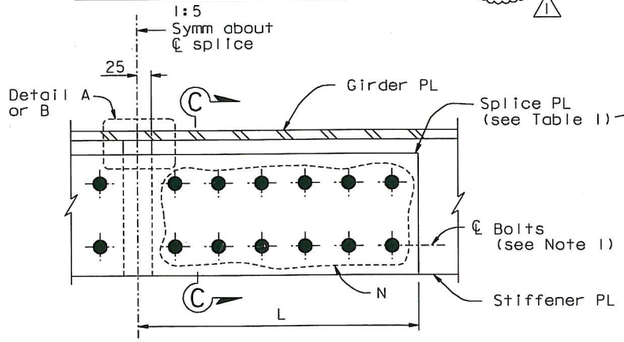

AT PLATE STIFFENER, † < 30 (See Note 2)
1:5

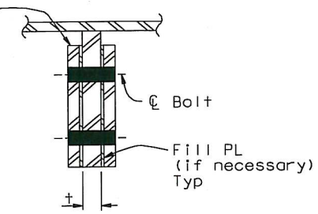

SECTION C-C (See Note 8)
1:5

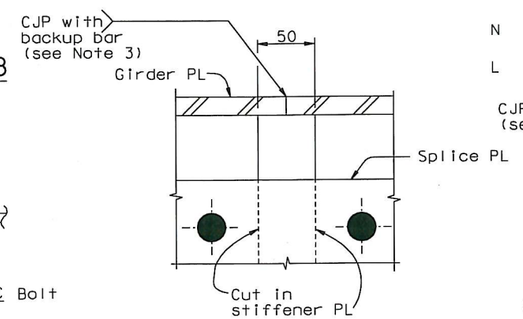

DETAIL A
1:2.5

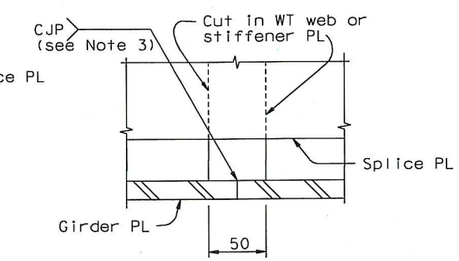

DETAIL B
1:2.5

BOLTED TYPE CONNECTION
GIRDER SPLICE DETAILS

LEGEND:

† Stiffener PL thickness

N Number of bolts required for half-splice

L Length of half-splice

NOTES:

1. For "Typical Girder Details" sheets, all bolts shall be detailed according to the bolt dimension table. See "Typical Girder Details No.1" sheet. All bolts are HS, unless noted otherwise.
2. For location of connection type, see Table 2 on "Typical Girder Details No.11" sheet.
3. Girder plate weld details shown in Details A and B are applicable for both field and shop splices on all box girder faces.
4. Sealing diaphragm. See note 4 on "Typical Girder Details No.4" sheet.
5. Splice details are applicable for shop and field splices for panel points 8 through 115.
6. Splice details are applicable for shop and field splices for panel points 115 through 128.
7. At the floorbeam side of the splice, the diaphragm plate shall not be used. Continuity plate shall be sealed according to diaphragm plate requirements.
8. For Section C-C at optional kinks, see "Typical Girder Details No.11A" sheet.
9. For bolted connections details at kinked field splice PP116-PP118, see "Typical Girder Details No.11B" sheet.
10. The diaphragm PL may be shifted by 50 mm to facilitate installation of the inside splice plate, subject to review and approval of the Engineer.

REGISTERED PROFESSIONAL ENGINEER Marwan N. Nader No. C 054426 Exp. 12/31/13 CIVIL STATE OF CALIFORNIA

FOR REVISIONS ONLY

ALL DIMENSIONS ARE IN MILLIMETERS UNLESS OTHERWISE SHOWN

CONTRACT CHANGE ORDER NO. 87
SHEET 14 OF 115

REQUESTS FOR INFORMATION NOT ADDRESSED IN THIS CCO REMAIN IN FORCE

R. Valizadeh/V. Toan/Y.L./W.L./F.C.
DESIGN OVERSIGHT
Roya Valizadeh / Vong Toan / Y. Liu
SIGN OFF DATE 04/18/12

MARK	DATE	DESCRIPTIONS	BY	CH'D	CCO#
1	04/18/12	EAST END OBG	MN	GB	87

REVISIONS

	BY	CHECKED
DESIGN	G. Baker	P. Ritchie
DETAILS	S. Camo	T. McMeans
QUANTITIES	G. Baker	M. Roberts

PREPARED FOR THE STATE OF CALIFORNIA DEPARTMENT OF TRANSPORTATION

R. Manzanarez
PROJECT ENGINEER

BRIDGE NO. 34-0006L/R
KILOMETER POST 13.2/13.9

SAN FRANCISCO OAKLAND BAY BRIDGE
EAST SPAN SEISMIC SAFETY PROJECT
SELF-ANCHORED SUSPENSION BRIDGE
(SUPERSTRUCTURE & TOWER)

TYPICAL GIRDER DETAILS NO. 10

Rev. Date: 5-18-98

ORIGINAL SCALE IN MILLIMETERS FOR REDUCED PLANS 0 10 20 30 40 50 60 70 80 90 100

CU 04
EA 0120F1

DISREGARD PRINTS BEARING EARLIER REVISION DATES

REVISION DATES (PRELIMINARY STAGE ONLY) 05/15/99 08/02/99 05/31/01 04/08/02 07/01/02 12/19/02

SHEET 217R1 OF

FILE => I:\bb\04-012001\sas\contract plans and cco\cco\cco#87\temp\agdkd06.dgn

USERNAME => DWinrow DATE PLOTTED => 18 APR 2012 TIME PLOTTED => 11:01:24

100% PS&E

DIST.	COUNTY	ROUTE	KILOMETER POST TOTAL PROJECT	SHEET NO.	TOTAL SHEETS
04	SF	80	13.2/13.9	635R1	1204

George Baker
REGISTERED ENGINEER - CIVIL

12-6-04
PLANS APPROVAL DATE

REGISTERED PROFESSIONAL ENGINEER George S. Baker No. C57112 Exp. 12/31/05 CIVIL STATE OF CALIFORNIA

The State of California or its officers or agents shall not be responsible for the accuracy or completeness of electronic copies of this plan sheet.

T.Y. LIN / MOFFATT & NICHOL
825 BATTERY STREET
SAN FRANCISCO, CA 94111

Caltrans now has a web site! To get to the web site, go to: http://www.dot.ca.gov

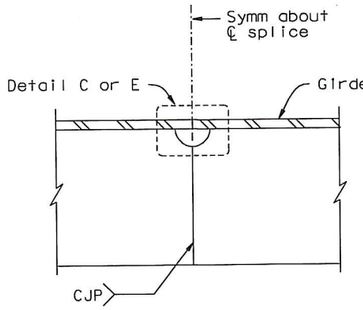

PLATE STIFFENER (See Note 5) △1
1:5

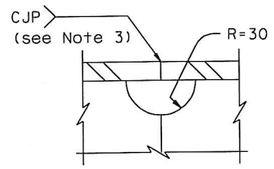

DETAIL C
1:2.5

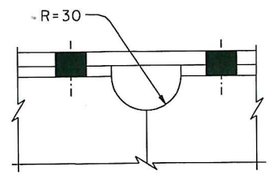

DETAIL D
1:2.5

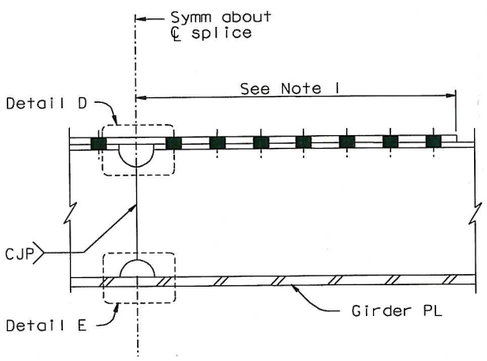

WT STIFFENER
1:5

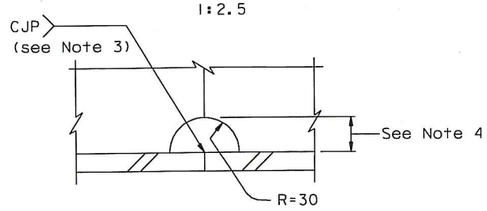

DETAIL E
1:2.5

TABLE 2
LOCATION OF GIRDER CONNECTION TYPE
(See Notes 1 and 2)

STIFFENER TYPE	FIELD SPLICE	SHOP SPLICE
Rib	Bolted	Bolted
WT	Bolted	Welded
Plate, <30	Bolted	Welded
Plate, ≥30	Welded	Welded

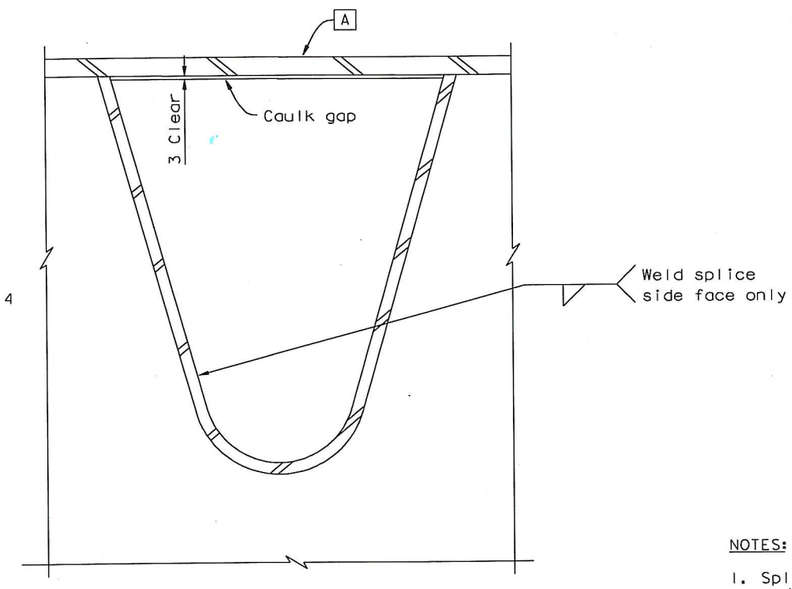

DIAPHRAGM DETAIL
1:2.5

NOTES:

1. Splice of WT flange is bolted for both bolted and welded type connection. For details, see "Typical Girder Details No. 10" sheet.
2. For bolted type connection, see "Typical Girder Details No. 10" sheet.
3. Girder plate weld details shown in Details C and E are applicable for both field and shop splices.
4. For stiffeners less than 200, height of opening shall not exceed 15% of stiffener height.
5. △1 For welded plate stiffener splice at optional kinks, see "Typical Girder Details No. 11A" sheet.

WELDED TYPE CONNECTION
GIRDER SPLICE DETAILS

REGISTERED PROFESSIONAL ENGINEER Marwan N. Nader No. C 054426 Exp. 12/31/13 CIVIL STATE OF CALIFORNIA

FOR REVISIONS ONLY

CONTRACT CHANGE ORDER NO. 87
SHEET 15 OF 115

REQUESTS FOR INFORMATION NOT ADDRESSED IN THIS CCO REMAIN IN FORCE

ALL DIMENSIONS ARE IN MILLIMETERS UNLESS OTHERWISE SHOWN

MARK	DATE	DESCRIPTIONS	BY	CH'D	CCO#
△1	04/18/12	EAST END OBG	MN	GB	87

REVISIONS

R. Valizadeh/V. Toan/Y.L./W/L/F.C.
DESIGN OVERSIGHT
Ryan Valizadeh / Vang Toan / Y. Liu
SIGN OFF DATE 04/18/12

Rev. Date: 5-18-98

DESIGN BY G. Baker CHECKED P. Ritchie
DETAILS BY S. Camo CHECKED T. McMeans
QUANTITIES BY G. Baker CHECKED M. Roberts

PREPARED FOR THE STATE OF CALIFORNIA DEPARTMENT OF TRANSPORTATION

R. Manzanarez
PROJECT ENGINEER

BRIDGE NO. 34-0006L/R
KILOMETER POST 13.2/13.9

SAN FRANCISCO OAKLAND BAY BRIDGE
EAST SPAN SEISMIC SAFETY PROJECT
SELF-ANCHORED SUSPENSION BRIDGE
(SUPERSTRUCTURE & TOWER)

TYPICAL GIRDER DETAILS NO. 11

ORIGINAL SCALE IN MILLIMETERS FOR REDUCED PLANS 0 10 20 30 40 50 60 70 80 90 100

CU 04
EA 0120F1

DISREGARD PRINTS BEARING EARLIER REVISION DATES → REVISION DATES (PRELIMINARY STAGE ONLY) 05/15/99 08/05/99 05/31/01 04/26/02 01/31/02 12/19/02

SHEET 218R1 OF

FILE => I:\bb\04-012001\sas\contract plans and cco\cco\cco#87\temp\ggdkd06a.dgn

USERNAME => DWinrow DATE PLOTTED => 18 APR 2012 TIME PLOTTED => 11:02:32

100 % PS&E

DIST.	COUNTY	ROUTE	KILOMETER POST TOTAL PROJECT	SHEET NO.	TOTAL SHEETS
04	SF	80	13.2/13.9	635S1	1204

REGISTERED ENGINEER - CIVIL

04-18-12
PLANS APPROVAL DATE

REGISTERED PROFESSIONAL ENGINEER Marwan N. Nader No. C 054426 Exp. 12/31/13 CIVIL STATE OF CALIFORNIA

The State of California or its officers or agents shall not be responsible for the accuracy or completeness of electronic copies of this plan sheet.

T.Y. LIN / MOFFATT & NICHOL
825 BATTERY STREET
SAN FRANCISCO, CA 94111

Caltrans now has a web site! To get to the web site, go to: http://www.dot.ca.gov

Caltrans Metric

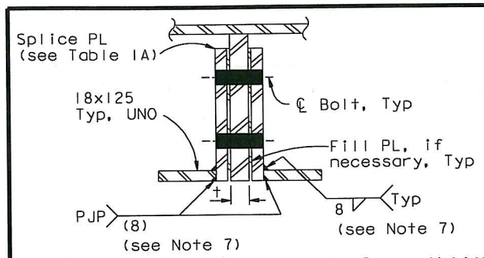

OPTIONAL SECTION C-C @ KINKS (See Note 1)

1:5

STIFFENER SPLICE @ KINKS					
PLATE STIFFENER THICKNESS t	SPLICE PLATE			HS BOLT	
	PLATE SIZE	FLANGE PLATE (See Note 5)	L	N	SIZE
16 x 140	14 x 100	18 x 100	715	9	M24
18 x 155	14 x 140	18 x 65	785	13	M24
20 x 180	18 x 165	18 x 125	685	16	M24
22 x 200	18 x 185	18 x 125	720	16	M27
25 x 230	18 x 215	18 x 125	785	18	M27
22 x 185	20 x 170	18 x 125	785	15	M27
25 x 200	20 x 185	18 x 125	785	18	M27
28 x 220	20 x 200	18 x 125	785	18	M27
28 x 240	20 x 225	18 x 125	785	18	M27
28 x 255	20 x 245	25 x 125	785	20	M27
28 x 300	20 x 275	18 x 125	785	22	M27

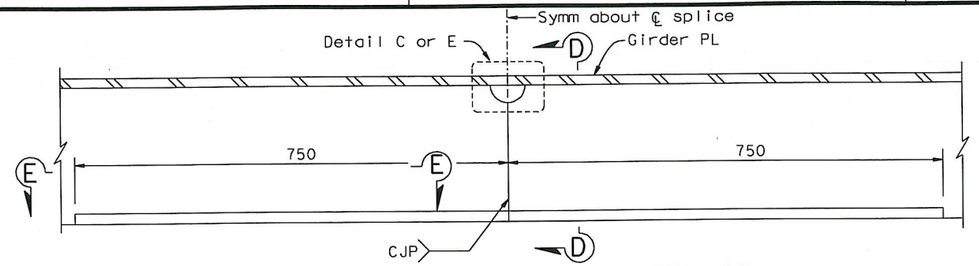

OPTIONAL PLATE STIFFENER SPLICE AT KINKS FOR RIBS TYPE 2 AND 10 (See Note 1)

1:5

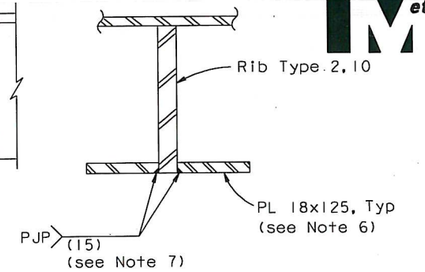

SECTION D-D

1:5

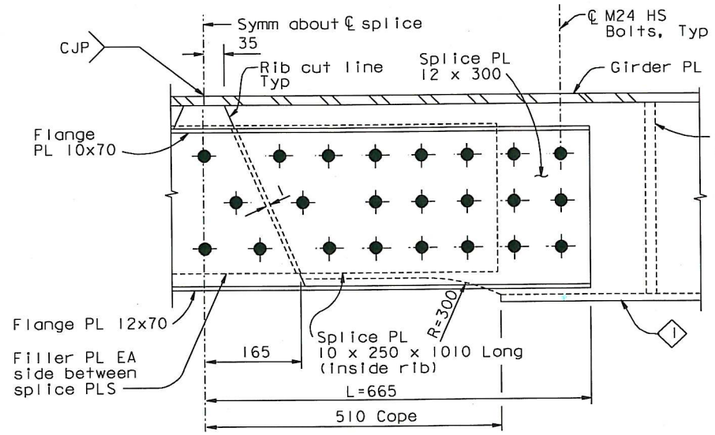

ALTERNATIVE SPLICE DETAIL NO. 1 AT RIB STIFFENER TYPE 1

1:5

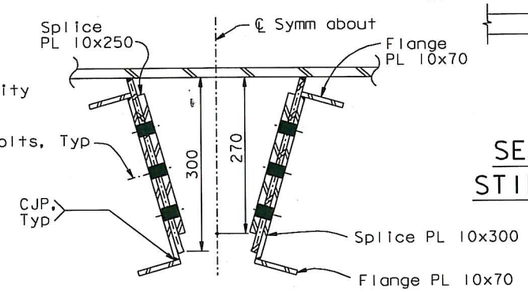

SECTION A'-A'

1:5

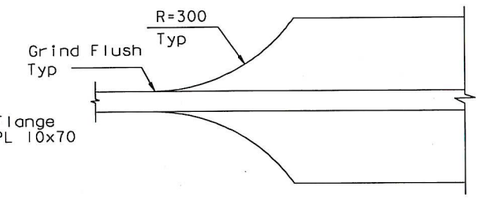

SECTION E-E TYPICAL STIFFENER TERMINATION

1:5

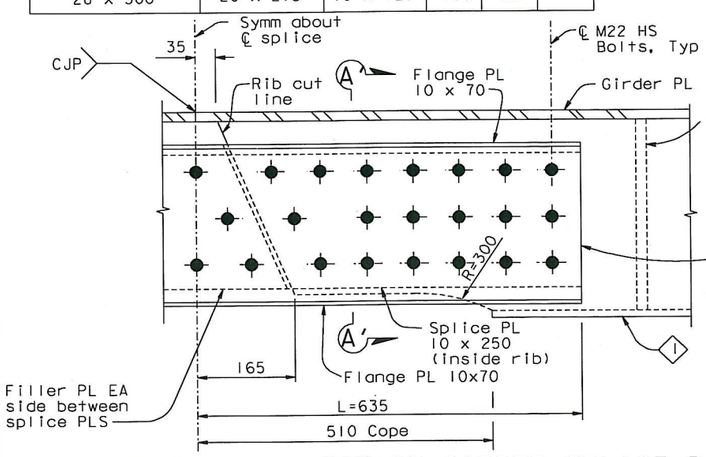

BOLTED TYPE CONNECTION GIRDER SPLICE DETAIL AT RIB STIFFENER TYPE 1 AT KINK

1:5

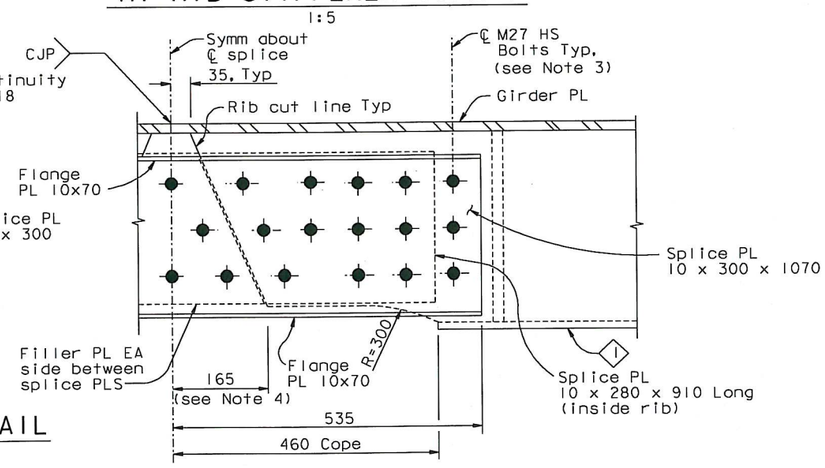

ALTERNATIVE SPLICE DETAIL NO. 2 AT RIB STIFFENER TYPE 1

1:5

NOTES:

1. For stiffeners indicated as curved on the Plans, the Contractor may elect to fabricate the ribs as straight segments, subject to review and approval of the Engineer. Rib kinks shall be placed within 50 mm of a floorbeam web or at segment splices. For ribs kinked at a segment splice, reinforcing flanges shall be provided as shown. This reinforcing shall be required for kinks greater than 0.0015 radians in open ribs or 0.005 radians in closed ribs, or as approved by the Engineer.
2. At the Contractor's option, "Alternative Splice Detail No.1" or "Alternative Splice Detail No.2" may be used between PP127 and PP127.5, subject to review and approval of the Engineer.
3. Minimum bolt edge distance: 48 mm. Minimum bolt spacing: 82 mm.
4. Dimensions may be reduced by up to 20 mm to accommodate tight space.
5. Flange PL 25x100 may be used in lieu of PL 18x125.
6. Reinforcing flanges shall be ASTM A709M HPS Grade 485W.
7. At the Contractor's option, the web to flange web may be a 12 mm effective PJP, subject to review and approval of the Engineer.

CONTRACT CHANGE ORDER NO. 87
SHEET 16 OF 115

REQUESTS FOR INFORMATION NOT ADDRESSED IN THIS CCO REMAIN IN FORCE

ALL DIMENSIONS ARE IN MILLIMETERS UNLESS OTHERWISE SHOWN

100 % PS&E

DATE PLOTTED => 18 APR 2012 TIME PLOTTED => 11:03:31

USERNAME => DWinrow

R. Valizadeh/V. Toan/Y.L./W.L./F.C.
DESIGN OVERSIGHT
Roya Valizadeh / Vong Toan / Y. Liu
SIGN OFF DATE 04/18/12

MARK	DATE	DESCRIPTIONS	BY	CH'D	CCO#
0	04/18/12	EAST END OBG	GB	MN	87

REVISIONS

DESIGN	BY G. Baker	CHECKED M. Nader	
DETAILS	BY G. Baker	CHECKED D. Turner	
QUANTITIES	BY G. Baker	CHECKED D. Turner	

PREPARED FOR THE STATE OF CALIFORNIA DEPARTMENT OF TRANSPORTATION

R. Manzanarez
PROJECT ENGINEER

BRIDGE NO. 34-0006L/R
KILOMETER POST 13.2/13.9

SAN FRANCISCO OAKLAND BAY BRIDGE
EAST SPAN SEISMIC SAFETY PROJECT
SELF-ANCHORED SUSPENSION BRIDGE
(SUPERSTRUCTURE & TOWER)

TYPICAL GIRDER DETAILS NO. 11A

Rev. Date: 5-18-98

ORIGINAL SCALE IN MILLIMETERS FOR REDUCED PLANS 0 10 20 30 40 50 60 70 80 90 100

CU 04
EA 0120F1

DISREGARD PRINTS BEARING EARLIER REVISION DATES 04/18/12

REVISION DATES (PRELIMINARY STAGE ONLY)

SHEET 218S1 OF

FILE => I:\bb\04-012001\sas\contract plans and cco\cco\cco#87\temp\agdkd06h.dgn

DIST.	COUNTY	ROUTE	KILOMETER POST TOTAL PROJECT	SHEET NO.	TOTAL SHEETS
04	SF	80	13.2/13.9	635S2	1204

REGISTERED ENGINEER - CIVIL

04-18-12
PLANS APPROVAL DATE

REGISTERED PROFESSIONAL ENGINEER Marwan N. Nader No. C 054426 Exp. 12/31/13 CIVIL STATE OF CALIFORNIA

The State of California or its officers or agents shall not be responsible for the accuracy or completeness of electronic copies of this plan sheet.

T.Y. LIN / MOFFATT & NICHOL
825 BATTERY STREET
SAN FRANCISCO, CA 94111

Caltrans now has a web site! To get to the web site, go to: http://www.dot.ca.gov

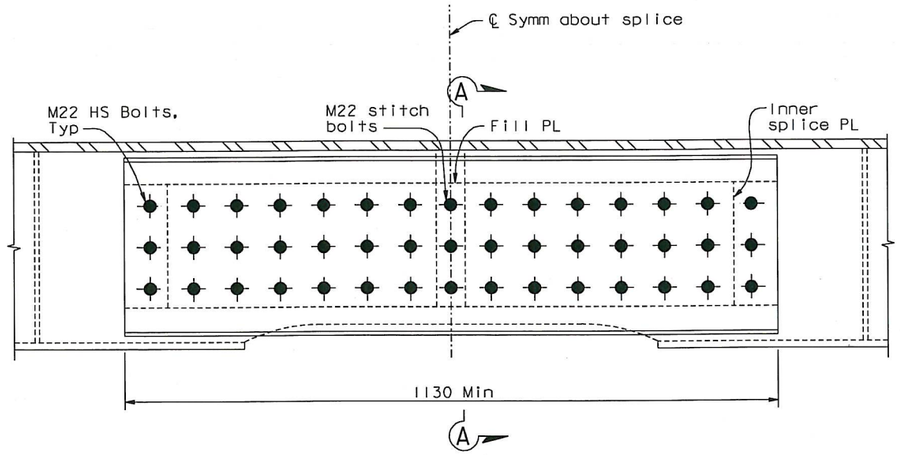

ALTERNATIVE SPLICE FOR REPAIR OF MISALIGNMENT
1:5

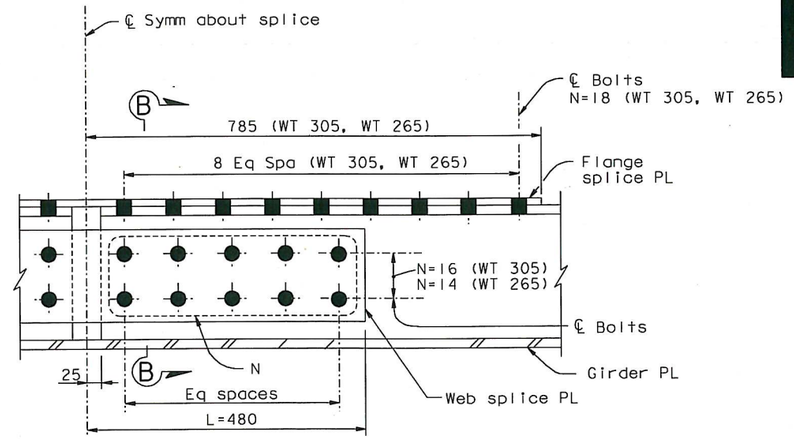

AT WT STIFFENER

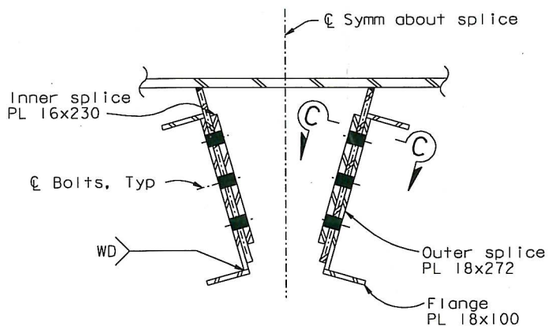

SECTION A-A (See Note 1)
1:5

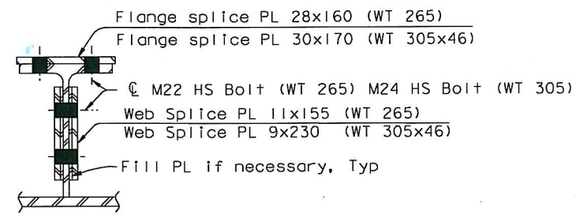

SECTION B-B

BOLTED TYPE CONNECTION AT WT STIFFENER
AT KINKED FIELD SPLICE PP116 - PP118
1:5

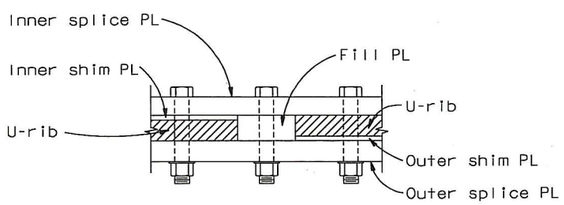

SECTION C-C
1:10

NOTES:

1. All faying surfaces of ribs and splice plates shall be brought to flush fit-up without forcing prior to bolt tensioning, using up to 10 mm total shims at each rib plate.
2. For u-ribs with one or both sloping faces misaligned at any point by more than 4 mm, but not more than 10 mm, this reinforced splice shall be applied to both faces of the rib.
3. Where misalignment between the top and bottom of a rib face differs by more than 2 mm then tapered shims shall be used.
4. At each rib wall up to two plies of shimming may be used.

CONTRACT CHANGE ORDER NO. 87
SHEET 17 OF 115

REQUESTS FOR INFORMATION NOT ADDRESSED IN THIS CCO REMAIN IN FORCE

ALL DIMENSIONS ARE IN MILLIMETERS UNLESS OTHERWISE SHOWN

R. Valizadeh/V. Toan/Y.L./W.L./F.C.
DESIGN OVERSIGHT
SIGN OFF DATE 04/18/12

MARK	DATE	DESCRIPTIONS	BY	CH'D	CCO#
0	04/18/12	EAST END OBG	GB	MN	87

REVISIONS

DESIGN	BY G. Baker	CHECKED	M. Nader
DETAILS	BY G. Baker	CHECKED	D. Turner
QUANTITIES	BY G. Baker	CHECKED	D. Turner

PREPARED FOR THE STATE OF CALIFORNIA DEPARTMENT OF TRANSPORTATION

R. Manzanarez
PROJECT ENGINEER

BRIDGE NO. 34-0006L/R
KILOMETER POST 13.2/13.9

SAN FRANCISCO OAKLAND BAY BRIDGE
EAST SPAN SEISMIC SAFETY PROJECT
SELF-ANCHORED SUSPENSION BRIDGE
(SUPERSTRUCTURE & TOWER)

TYPICAL GIRDER DETAILS NO. 11B

Rev. Date: 5-18-98

ORIGINAL SCALE IN MILLIMETERS FOR REDUCED PLANS 0 10 20 30 40 50 60 70 80 90 100

CU 04
EA 0120F1

DISREGARD PRINTS BEARING EARLIER REVISION DATES 04/18/12

REVISION DATES (PRELIMINARY STAGE ONLY)

SHEET 218S2 OF

FILE => I:\bb\04-012001\sas\contract plans and cco\cco\cco#87\temp\ggdkd06k.dgn

100 % PS&E

DATE PLOTTED => 18 APR 2012 TIME PLOTTED => 11:04:33

USERNAME => DWinrow

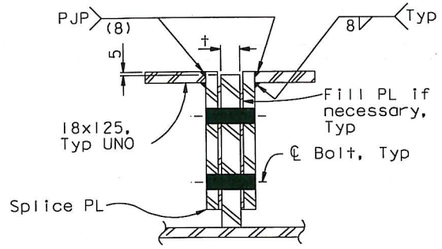

OPTIONAL SECTION C-C @ KINKS (NEAR TRAVELER RAIL SUPPORT)

1:5

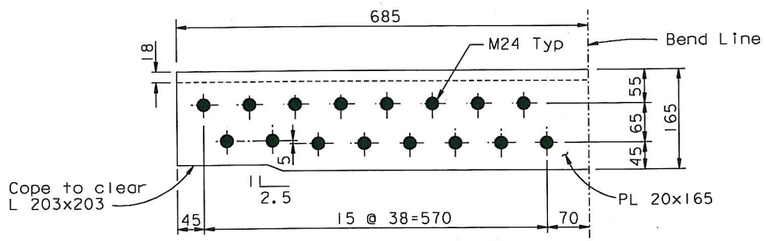

AT TYPE 14 PLATE STIFFENERS @ PP120-PP125 NEAR TRAVELER RAIL SUPPORT

NTS

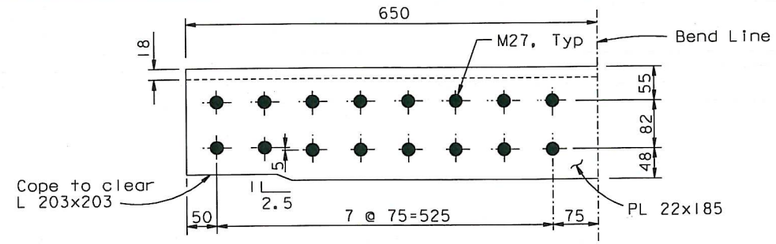

AT TYPE 14 PLATE STIFFENERS @ PP120-PP122 NEAR TRAVELER RAIL SUPPORT

NTS

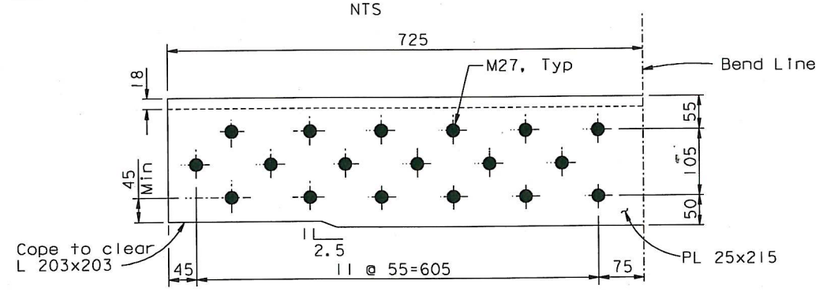

AT TYPE 6 AND TYPE 13 PLATE STIFFENERS NEAR TRAVELER RAIL SUPPORT

NTS

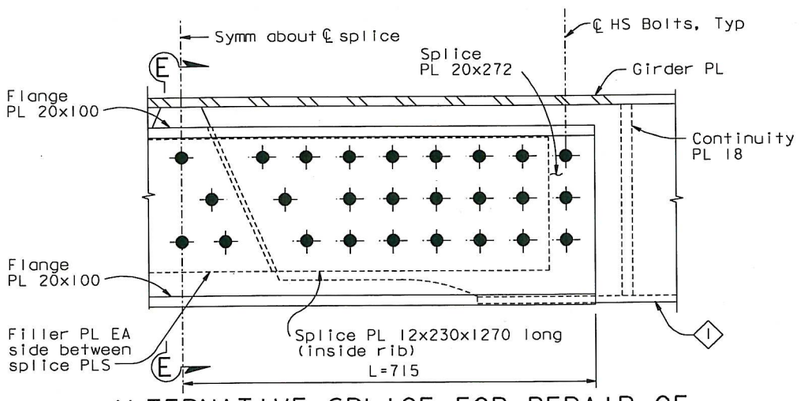

ALTERNATIVE SPLICE FOR REPAIR OF MISALIGNED U-RIB AT DETAILED KINK >0.005 RAD

NTS

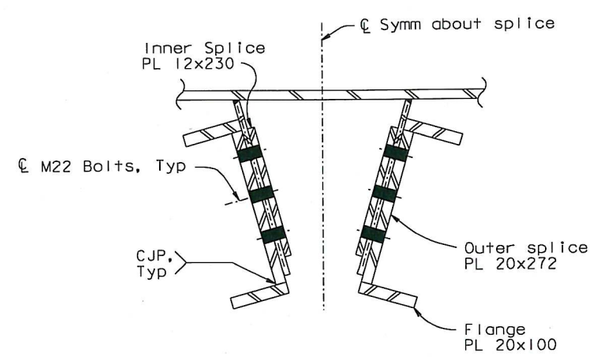

SECTION E-E (See Note 1)

NTS

U-RIB CONFIGURATION	MISALIGNMENT (mm)	SOURCE
Straight	up to 4	Contract Sheet 634, Section A-A
Misaligned	>4 to 10	RFI 1766R0 Response Attachment
Kinked	up to 4	SK-777R4-1
Misaligned & Kinked	>4 to 10	-

NOTES:

1. All faying surfaces of ribs and splice plates shall be brought to flush fit-up without forcing prior to bolt tensioning, using up to 10 mm total shims at each rib plate.
2. For u-ribs with one or both sloping faces misaligned at any point by more than 4 mm, but not more than 10 mm, this reinforced splice shall be applied to both faces of the rib.
3. Where misalignment between the top and bottom of a rib face differs by more than 2 mm, then tapered shims shall be used.
4. At each rib wall up to two plies of shimming may be used.

CONTRACT CHANGE ORDER NO. 87
SHEET 18 OF 115

REQUESTS FOR INFORMATION NOT ADDRESSED IN THIS CCO REMAIN IN FORCE

ALL DIMENSIONS ARE IN MILLIMETERS UNLESS OTHERWISE SHOWN

DIST.	COUNTY	ROUTE	KILOMETER POST TOTAL PROJECT	SHEET NO.	TOTAL SHEETS
04	SF	80	13.2/13.9	635S3	1204

REGISTERED ENGINEER - CIVIL
04-18-12
PLANS APPROVAL DATE

REGISTERED PROFESSIONAL ENGINEER Marwan N. Nader No. C 054426 Exp. 12/31/13 CIVIL STATE OF CALIFORNIA

The State of California or its officers or agents shall not be responsible for the accuracy or completeness of electronic copies of this plan sheet.

T.Y. LIN / MOFFATT & NICHOL
825 BATTERY STREET
SAN FRANCISCO, CA 94111

Caltrans now has a web site! To get to the web site, go to: http://www.dot.ca.gov

Caltrans Metric

R. Valizadeh/V. Toan/Y.L./W.L./F.C.
DESIGN OVERSIGHT
SIGN OFF DATE 04/18/12

MARK	DATE	DESCRIPTIONS	BY	CH'D	CCO#
0	04/18/12	EAST END OBG	GB	MN	87

REVISIONS

DESIGN	BY G. Baker	CHECKED M. Nader	
DETAILS	BY G. Baker	CHECKED D. Turner	
QUANTITIES	BY G. Baker	CHECKED D. Turner	

PREPARED FOR THE STATE OF CALIFORNIA DEPARTMENT OF TRANSPORTATION

R. Manzanarez
PROJECT ENGINEER

BRIDGE NO. 34-0006L/R
KILOMETER POST 13.2/13.9

SAN FRANCISCO OAKLAND BAY BRIDGE
EAST SPAN SEISMIC SAFETY PROJECT
SELF-ANCHORED SUSPENSION BRIDGE
(SUPERSTRUCTURE & TOWER)

TYPICAL GIRDER DETAILS NO. 11C

Rev. Date: 5-18-98

ORIGINAL SCALE IN MILLIMETERS FOR REDUCED PLANS 0 10 20 30 40 50 60 70 80 90 100

CU 04
EA 0120F1

DISREGARD PRINTS BEARING EARLIER REVISION DATES 04/18/12

REVISION DATES (PRELIMINARY STAGE ONLY)

SHEET 218S3 OF

FILE => I:\bb\04-012001\sas\contract plans and cco\cco\cco#87\temp\agdkd06m.dgn

100 % PS&E

DATE PLOTTED => 18 APR 2012 TIME PLOTTED => 11:05:59

USERNAME => DWinrow

DIST.	COUNTY	ROUTE	KILOMETER POST TOTAL PROJECT	SHEET NO.	TOTAL SHEETS
04	SF	80	13.2/13.9	638R3	1204

George Baker
REGISTERED ENGINEER - CIVIL
12-6-04
PLANS APPROVAL DATE

REGISTERED PROFESSIONAL ENGINEER George S. Baker No. C 57112 Exp. 12/31/05 CIVIL STATE OF CALIFORNIA

The State of California or its officers or agents shall not be responsible for the accuracy or completeness of electronic copies of this plan sheet.

T.Y. LIN / MOFFATT & NICHOL
825 BATTERY STREET
SAN FRANCISCO, CA 94111

Caltrans now has a web site! To get to the web site, go to: http://www.dot.ca.gov

Caltrans Metric

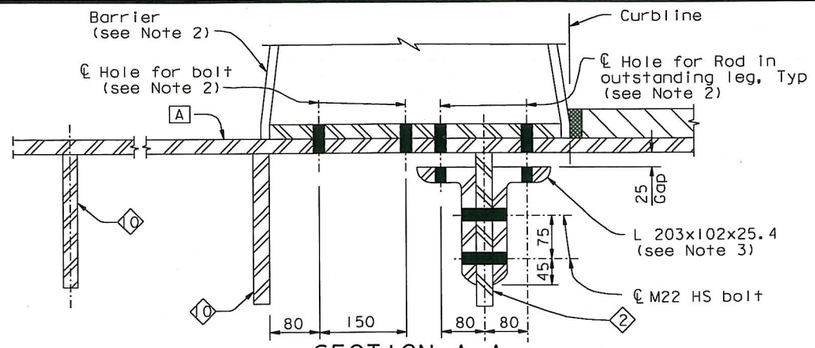

SECTION A-A
1:5

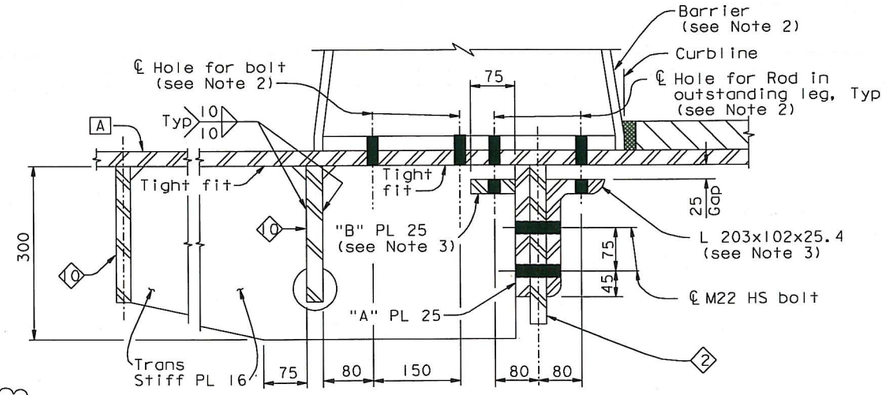

SECTION B-B
1:5

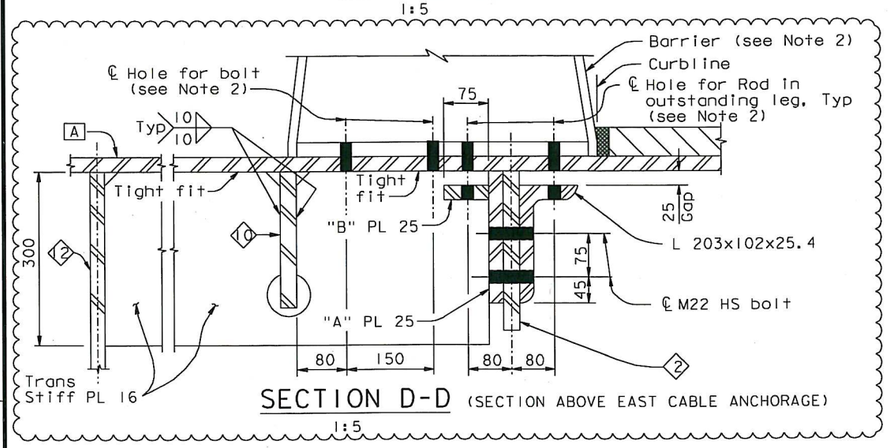

SECTION D-D (SECTION ABOVE EAST CABLE ANCHORAGE)
1:5

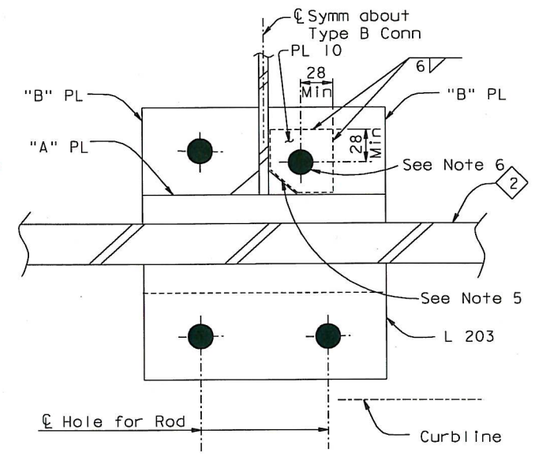

ALTERNATE
SECTION C-C (See Note 4)
1:2.5

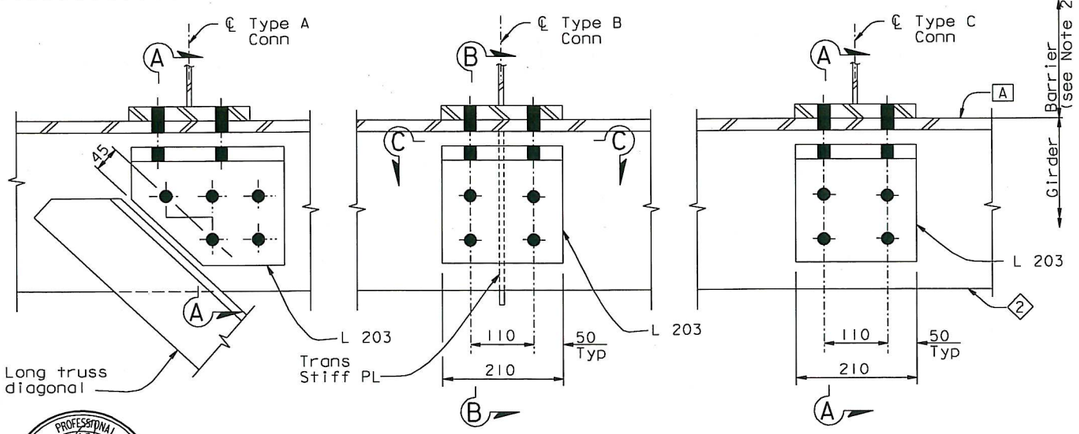

BARRIER CONNECTION DETAILS (See Note 1)
1:5

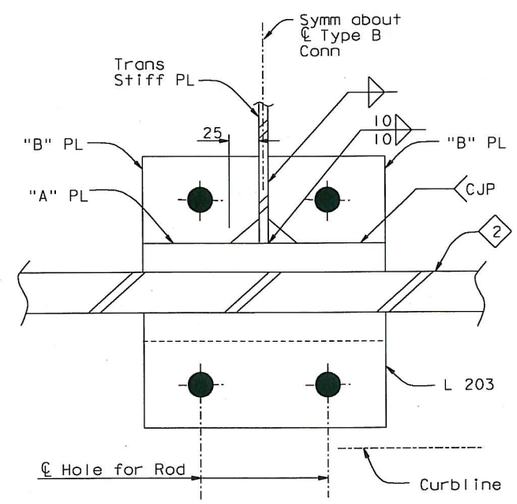

SECTION C-C
1:2.5

NOTES:

1. For location of typical barrier connection types A, B and C, see "Typical Girder Details No. 12" sheet.
2. For typical barrier details, see "Barrier Details" sheets.
3. For bolt hole deviation due to fit-up tolerance, the minimum acceptable edge distance shall be 28 mm for angles and 32 mm for fabricated plate or cut edges.
4. As a result of mis-drilled holes during fabication, Alternate Section C-C may be used on a Fit-for-purpose basis where edge distance is less than 22 mm. For details not shown, see Section C-C.
5. Snipe PL 10 to clear weld. Grind weld to 10 mm fillet if necessary.
6. Match drill PL 10 bolt hole from deck.

REGISTERED PROFESSIONAL ENGINEER Marwan N. Nader No. C 054426 Exp. 12/31/11 CIVIL STATE OF CALIFORNIA

FOR REVISIONS ONLY

CONTRACT CHANGE ORDER NO. 87
SHEET 19 OF 115

REQUESTS FOR INFORMATION NOT ADDRESSED IN THIS CCO REMAIN IN FORCE

MARK	DATE	DESCRIPTIONS	BY	CH'D	CCO#
3	09/01/11	EAST END OBG	MN	DT	87
2	09/14/10	BARRIER MODIFICATIONS	GB	MN	44
1	04/05/10	BARRIER MODIFICATIONS	GB	MN	44

REVISIONS

ALL DIMENSIONS ARE IN MILLIMETERS UNLESS OTHERWISE SHOWN

R. Vallizadeh/V. Toan/Y. L./W. L./F. C.
DESIGN OVERSIGHT
SIGN OFF DATE 09/01/11

	BY	CHECKED
DESIGN	G. Baker	P. Ritchie
DETAILS	C. Mauch	T. McMeans
QUANTITIES	G. Baker	M. Roberts

PREPARED FOR THE STATE OF CALIFORNIA DEPARTMENT OF TRANSPORTATION

R. Manzanarez
PROJECT ENGINEER

BRIDGE NO. 34-0006L/R
KILOMETER POST 13.2/13.9

SAN FRANCISCO OAKLAND BAY BRIDGE
EAST SPAN SEISMIC SAFETY PROJECT
SELF-ANCHORED SUSPENSION BRIDGE
(SUPERSTRUCTURE & TOWER)

TYPICAL GIRDER DETAILS NO. 14

Rev. Date: 5-18-98

ORIGINAL SCALE IN MILLIMETERS FOR REDUCED PLANS 0 10 20 30 40 50 60 70 80 90 100

CU 04
EA 0120F1

DISREGARD PRINTS BEARING EARLIER REVISION DATES 05/31/01 04/26/02 07/01/02 12/19/02

REVISION DATES (PRELIMINARY STAGE ONLY)

SHEET 221R3 OF

FILE => I:\bb\04-0120F1\sas\contract plans and cco\cco#87\1-original 09-01-11\dgn\agdkd09.dgn

100 % PS&E

DATE PLOTTED => 30 AUG 2011 TIME PLOTTED => 11:29:22

USERNAME => PTom

DIST.	COUNTY	ROUTE	KILOMETER POST TOTAL PROJECT	SHEET NO.	TOTAL SHEETS
04	SF	80	13.2/13.9	640R1	1204

Caltrans Metric

George Baker
REGISTERED ENGINEER - CIVIL
12-6-04
PLANS APPROVAL DATE

REGISTERED PROFESSIONAL ENGINEER George S. Baker No. C57112 Exp. 12/31/05 CIVIL STATE OF CALIFORNIA

The State of California or its officers or agents shall not be responsible for the accuracy or completeness of electronic copies of this plan sheet.

T.Y. LIN / MOFFATT & NICHOL
825 BATTERY STREET
SAN FRANCISCO, CA 94111

Caltrans now has a web site! To get to the web site, go to: http://www.dot.ca.gov

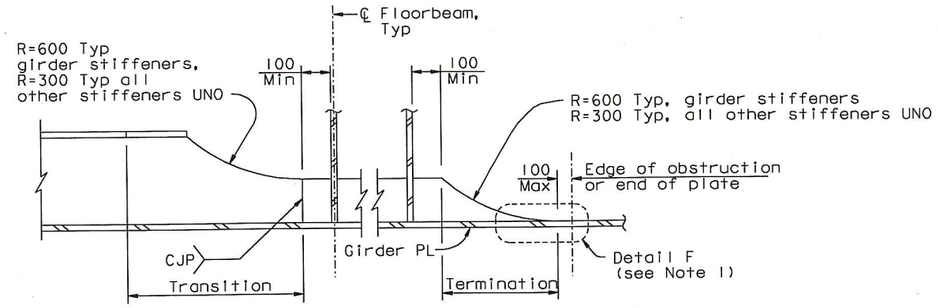

SECTION A-A

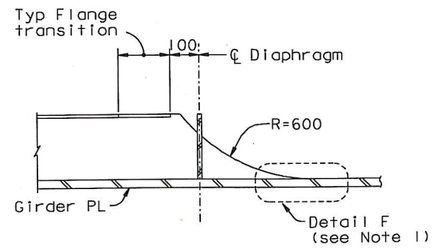

SECTION B-B

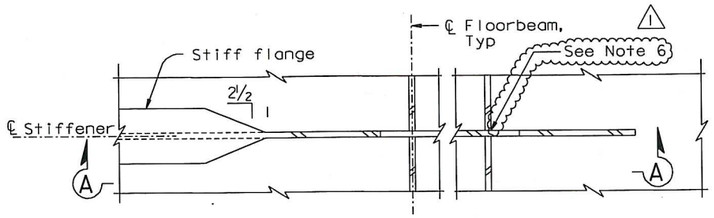

PLAN VIEW

TYPICAL STIFFENER TRANSITION AND TERMINATION
1:10

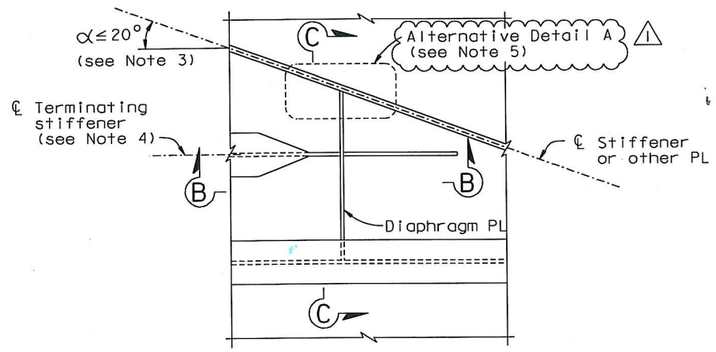

PLAN VIEW

STIFFENER TRANSITION AT GIRDER TRANSITION
1:10

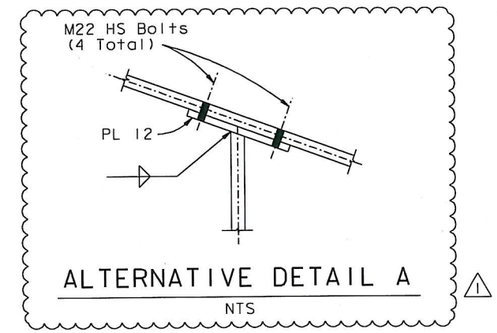

ALTERNATIVE DETAIL A
NTS

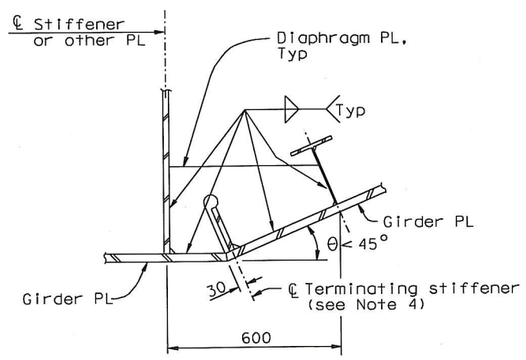

FOR θ<45 °

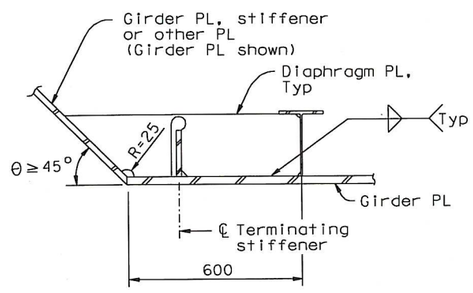

FOR 45 °≤ θ ≤90 °

SECTION C-C
1:10

STIFFENER DETAILS

NOTES:

1. For Detail F, see "Typical Floorbeam Details No. 4" sheet.
2. These details apply to WT and PL type stiffeners.
3. Angle varies, see "Girder At East Transition" sheets.
4. For penetration of diaphragm PL, use stiffener details "Typical Girder Details No. 5" sheet.
5. At the Contractor's option, alternative Detail A may be used in lieu of fillet welds between the diaphragm and the stiffener webs. This detail may be used at either or both ends of the diaphragm. (1)
6. For "Plan of Optional Stiffener Transition", see "Typical Girder Details No. 16A" sheet.

Daniel A. Turner
REGISTERED PROFESSIONAL ENGINEER No. C 65033 Exp. 06/30/13 CIVIL STATE OF CALIFORNIA
FOR REVISIONS ONLY

CONTRACT CHANGE ORDER NO. 87
SHEET 20 OF 115

REQUESTS FOR INFORMATION NOT ADDRESSED IN THIS CCO REMAIN IN FORCE

ALL DIMENSIONS ARE IN MILLIMETERS UNLESS OTHERWISE SHOWN

MARK	DATE	DESCRIPTIONS	BY	CH'D	CCO#
1	09/01/11	EAST END OBG	DT	GB	87

REVISIONS

R. Vallizadeh/V. Toan/Y.L./W.L./F.C.
DESIGN OVERSIGHT
SIGN OFF DATE 09/01/11

DESIGN	BY G. Baker	CHECKED	P. Ritchie
DETAILS	BY D. Veytsman	CHECKED	T. McMeans
QUANTITIES	BY G. Baker	CHECKED	M. Roberts

PREPARED FOR THE STATE OF CALIFORNIA DEPARTMENT OF TRANSPORTATION

R. Manzanarez
PROJECT ENGINEER

BRIDGE NO. 34-0006L/R
KILOMETER POST 13.2/13.9

SAN FRANCISCO OAKLAND BAY BRIDGE
EAST SPAN SEISMIC SAFETY PROJECT
SELF-ANCHORED SUSPENSION BRIDGE
(SUPERSTRUCTURE & TOWER)

TYPICAL GIRDER DETAILS NO. 16

Rev. Date: 5-18-98

ORIGINAL SCALE IN MILLIMETERS FOR REDUCED PLANS 0 10 20 30 40 50 60 70 80 90 100

CU 04
EA 0120F1

DISREGARD PRINTS BEARING EARLIER REVISION DATES

REVISION DATES (PRELIMINARY STAGE ONLY) 08/08/99 05/31/01 04/08/02 07/01/02 12/19/02

SHEET 223R1 OF

FILE => I:\bb\04-012001\sas\contract plans and cco\cco\cco#87\1-original 09-01-11\dgn\agdkd06f.dgn

USERNAME => PTom DATE PLOTTED => 30 AUG 2011 TIME PLOTTED => 11:16:11

100 % PS&E

DIST.	COUNTY	ROUTE	KILOMETER POST TOTAL PROJECT	SHEET NO.	TOTAL SHEETS
04	SF	80	13.2/13.9	640SIR1	1204

REGISTERED ENGINEER - CIVIL

05-20-11

PLANS APPROVAL DATE

REGISTERED PROFESSIONAL ENGINEER Marwan N. Nader No. C 054426 Exp. 12/31/11 CIVIL STATE OF CALIFORNIA

The State of California or its officers or agents shall not be responsible for the accuracy or completeness of electronic copies of this plan sheet.

T.Y. LIN / MOFFATT & NICHOL
825 BATTERY STREET
SAN FRANCISCO, CA 94111

Caltrans now has a web site! To get to the web site, go to: http://www.dot.ca.gov

Caltrans Metric

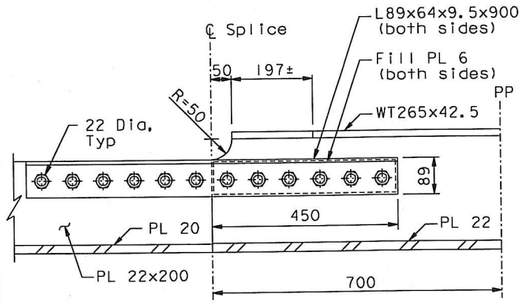

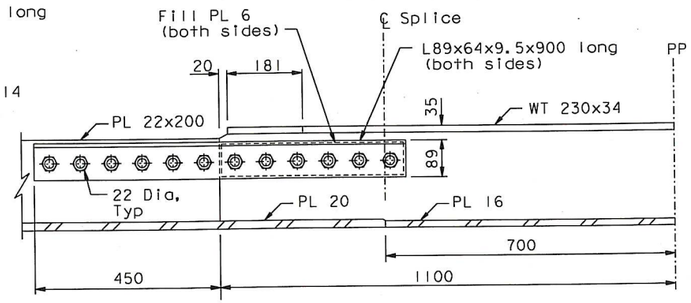

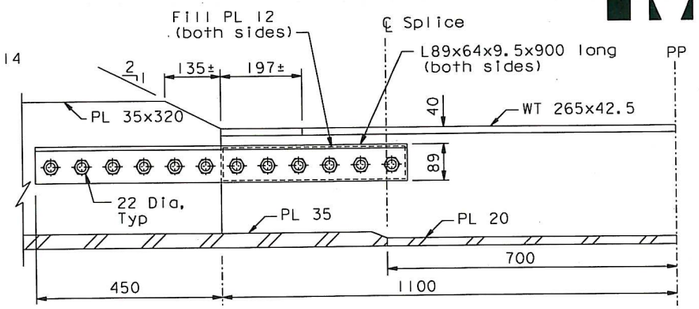

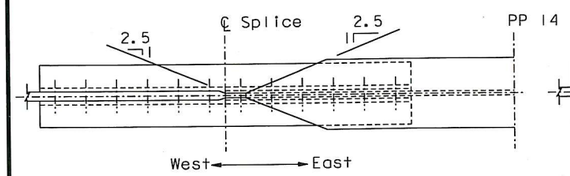

PP 14 SKIN PLATE 5

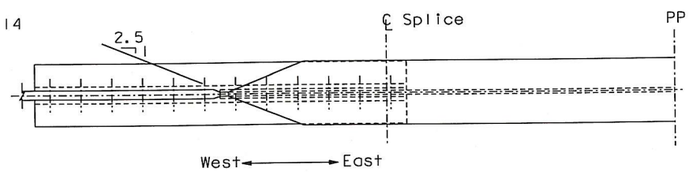

PP 14 SKIN PLATE 7

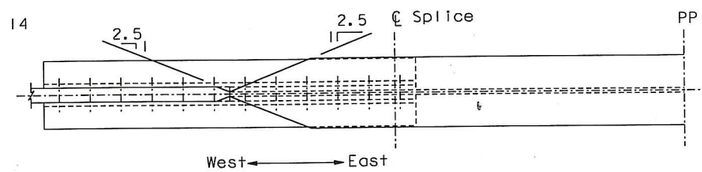

PP 14 SKIN PLATE 6

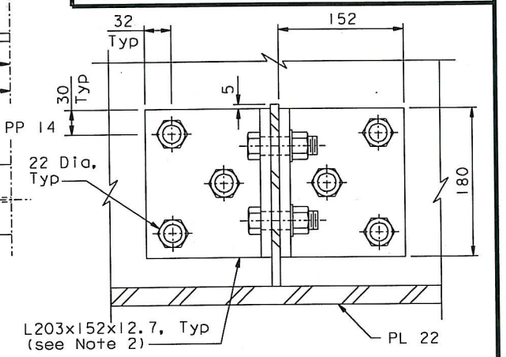

SECTION A-A
1:3.5

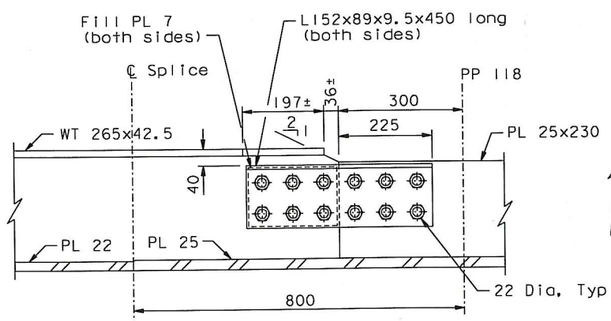

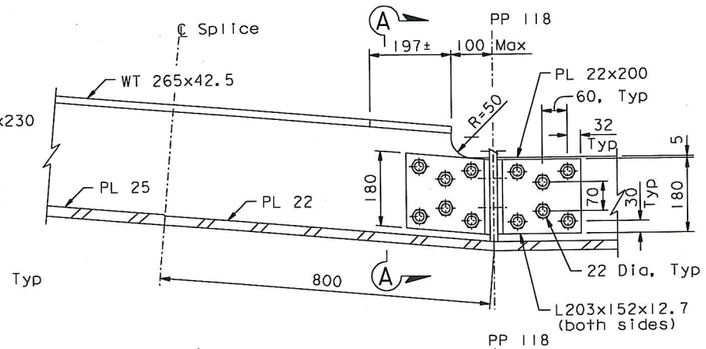

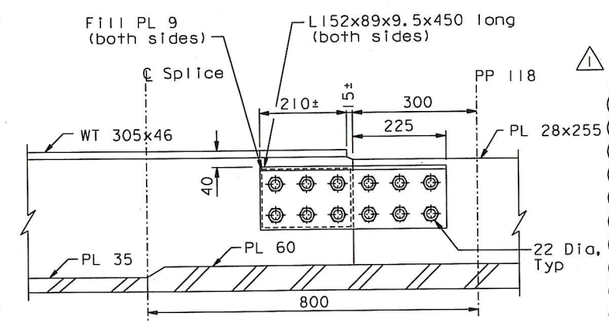

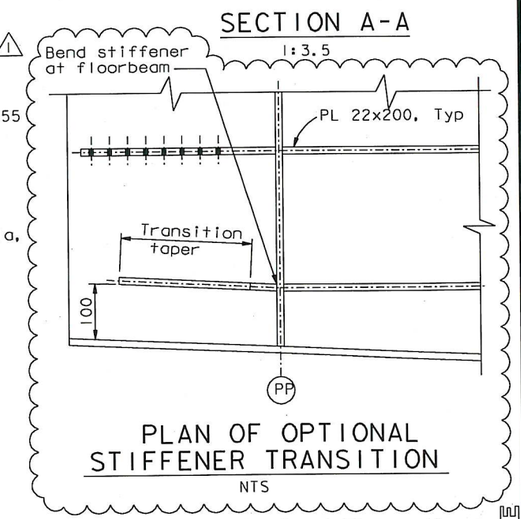

PLAN OF OPTIONAL STIFFENER TRANSITION
NTS

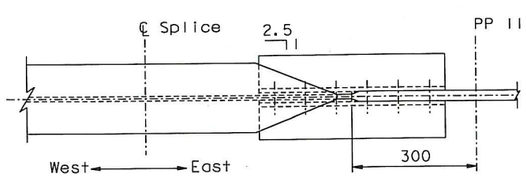

PP 118 SKIN PLATE 5

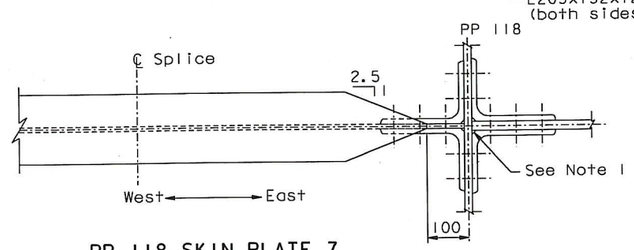

PP 118 SKIN PLATE 7

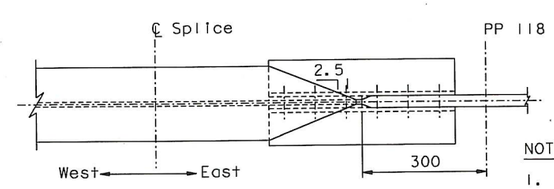

PP 118 SKIN PLATE 6

STIFFENER TRANSITION DETAILS @ PP14 & PP118

NTS

NOTES:

1. The L203x152x19, shall be chamfered 10 mm x 10 mm to provide access for the stiffener to web CJP.
2. For the two Type 7 stiffeners adjacent to Line E14, the 152 leg of the angle shall be trimmed to 115 where necessary. For the stiffener parallel to Line E14, the angles shall be bent.
3. Bolt spacing may be reduced to 2.75d where necessary.
4. All bolts shall be ASTM A325.

CONTRACT CHANGE ORDER NO. 87
SHEET 21 OF 115

REQUESTS FOR INFORMATION NOT ADDRESSED IN THIS CCO REMAIN IN FORCE

ALL DIMENSIONS ARE IN MILLIMETERS UNLESS OTHERWISE SHOWN

R. Valizadeh/V. Toan/Y. L./W. L./F. C.
DESIGN OVERSIGHT
Roya Valizadeh / Vong Toan / Y. Liu
SIGN OFF DATE 09/01/11

MARK	DATE	DESCRIPTIONS	BY	CH'D	CCO#
1	09/01/11	EAST END OBG	DT	MN	87
0	05/20/11	STIFFENER TRANSITIONS AT PP14 & PP118	DT	GB	204

REVISIONS

DESIGN	BY D. Turner	CHECKED G. Baker	
DETAILS	BY D. Turner	CHECKED G. Baker	
QUANTITIES	BY D. Turner	CHECKED G. Baker	

PREPARED FOR THE STATE OF CALIFORNIA DEPARTMENT OF TRANSPORTATION

R. Manzanarez
PROJECT ENGINEER

BRIDGE NO. 34-0006L/R
KILOMETER POST 13.2/13.9

SAN FRANCISCO OAKLAND BAY BRIDGE
EAST SPAN SEISMIC SAFETY PROJECT
SELF-ANCHORED SUSPENSION BRIDGE
(SUPERSTRUCTURE & TOWER)

TYPICAL GIRDER DETAILS NO. 16A

Rev. Date: 5-18-98

ORIGINAL SCALE IN MILLIMETERS FOR REDUCED PLANS 0 10 20 30 40 50 60 70 80 90 100

CU 04
EA 0120F1

DISREGARD PRINTS BEARING EARLIER REVISION DATES 05/20/11

REVISION DATES (PRELIMINARY STAGE ONLY)

SHEET 223SIR1 OF

FILE => I:\bb\04-012001\sas\contract plans and cco\cco\cco#87\1-original 09-01-11\dgn\agdkd06s.dgn

100 % PS&E

DATE PLOTTED => 30 AUG 2011 TIME PLOTTED => 11:27:35

USERNAME => PTom

DIST.	COUNTY	ROUTE	KILOMETER POST TOTAL PROJECT	SHEET NO.	TOTAL SHEETS
04	SF	80	13.2/13.9	653R1	1204

George Baker
REGISTERED ENGINEER - CIVIL
1-27-03
PLANS APPROVAL DATE

REGISTERED PROFESSIONAL ENGINEER George S. Baker No. C57112 Exp. 12/31/05 CIVIL STATE OF CALIFORNIA

The State of California or its officers or agents shall not be responsible for the accuracy or completeness of electronic copies of this plan sheet.

T.Y. LIN / MOFFATT & NICHOL
825 BATTERY STREET
SAN FRANCISCO, CA 94111

Caltrans now has a web site! To get to the web site, go to: http://www.dot.ca.gov

Caltrans Metric

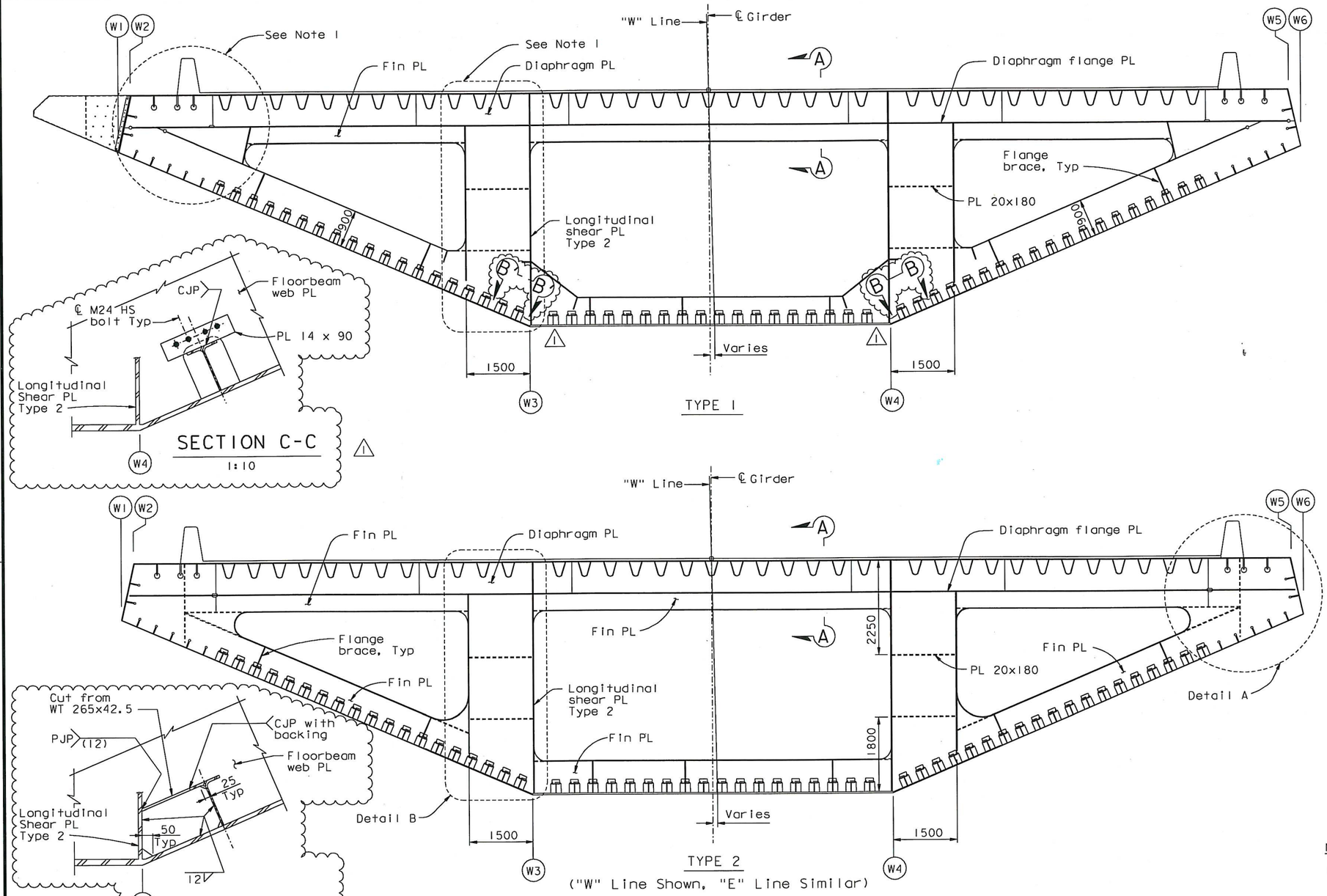

TYPICAL INTERMEDIATE SECTIONS (See Table)
1:50

INTERMEDIATE FLOORBEAM LOCATION TABLE	
TYPE 1	TYPE 2
	PP 111.5
PP 10.5	PP 112.5
PP 11.5	PP 113.5
PP 12.5	PP 114.5
PP 13.5	PP 115.5
PP 115.2	

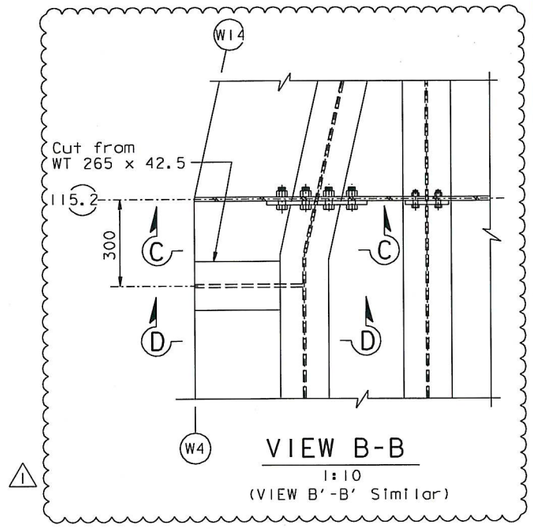

NOTES:

1. Typical intermediate floorbeam Type 1 is similar to floorbeam at PP116. For details, see "Floorbeam At East Transition No. 1" sheet.
2. For details not shown, see "Typical Floorbeam Details" sheets.
3. For Details A and B, see "Typical Floorbeam Details No. 9" sheet.
4. View B-B & B'-B' at PP115.2 only.

Daniel J. Turner
REGISTERED PROFESSIONAL ENGINEER Daniel J. Turner No. C 65033 Exp. 06/30/13 CIVIL STATE OF CALIFORNIA

FOR REVISIONS ONLY

CONTRACT CHANGE ORDER NO. 87
SHEET 22 OF 115

REQUESTS FOR INFORMATION NOT ADDRESSED IN THIS CCO REMAIN IN FORCE

ALL DIMENSIONS ARE IN MILLIMETERS UNLESS OTHERWISE SHOWN

100 % PS&E

SAN FRANCISCO OAKLAND BAY BRIDGE
EAST SPAN SEISMIC SAFETY PROJECT
SELF-ANCHORED SUSPENSION BRIDGE
(SUPERSTRUCTURE & TOWER)

TYPICAL FLOORBEAM DETAILS NO. 8

R. Vallzadeh/V. Toan/Y.L./W.L./F.C.
DESIGN OVERSIGHT
SIGN OFF DATE 09/01/11

MARK	DATE	DESCRIPTIONS	BY	CH'D	CCO#
1	09/01/11	EAST END OBG	DT	GB	87

REVISIONS

Rev. Date: 5-18-98

DESIGN	BY G. Baker	CHECKED	P. Ritchie
DETAILS	BY S. Camo	CHECKED	T. McMeans
QUANTITIES	BY C. Mauch	CHECKED	M. Roberts

PREPARED FOR THE STATE OF CALIFORNIA DEPARTMENT OF TRANSPORTATION

R. Manzanarez
PROJECT ENGINEER

BRIDGE NO. 34-0006L/R
KILOMETER POST 13.2/13.9

CU 04
EA 0120F1

ORIGINAL SCALE IN MILLIMETERS FOR REDUCED PLANS 0 10 20 30 40 50 60 70 80 90 100

DISREGARD PRINTS BEARING EARLIER REVISION DATES 01/25/99 05/25/99 08/06/99 05/24/01 09/06/02 01/04/02 12/19/02

SHEET 236R1 OF

FILE => I:\bb\04-01200I\sas\contract plans and cco\cco\cco#87\I-original 09-01-11\dgn\agftb07.dgn

USERNAME => ALI shonsk, DATE PLOTTED => 30 AUG 2011 TIME PLOTTED => 11:17:07

DIST.	COUNTY	ROUTE	KILOMETER POST TOTAL PROJECT	SHEET NO.	TOTAL SHEETS
04	SF	80	13.2/13.9	664R1	1204

George Baker
REGISTERED ENGINEER - CIVIL
12-6-04
PLANS APPROVAL DATE

REGISTERED PROFESSIONAL ENGINEER George S. Baker No. C57112 Exp. 12/31/05 CIVIL STATE OF CALIFORNIA

The State of California or its officers or agents shall not be responsible for the accuracy or completeness of electronic copies of this plan sheet.

T.Y. LIN / MOFFATT & NICHOL
825 BATTERY STREET
SAN FRANCISCO, CA 94111

Caltrans now has a web site! To get to the web site, go to: http://www.dot.ca.gov

Caltrans Metric

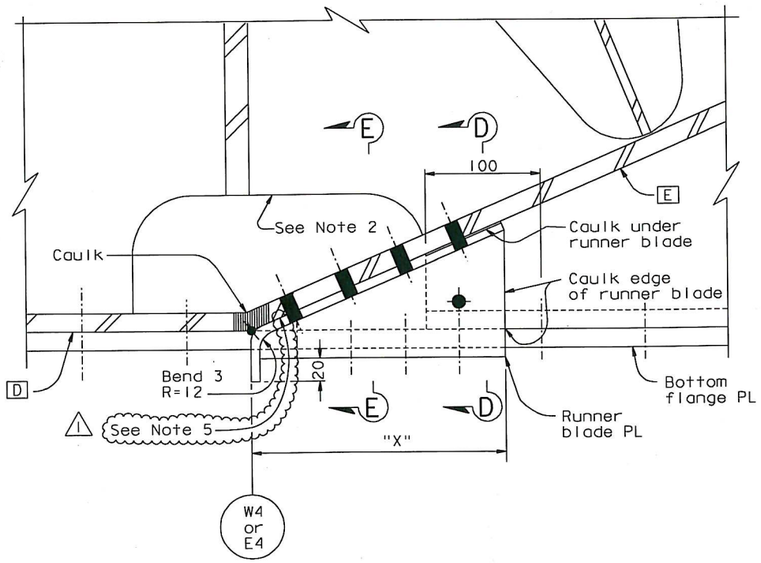

RUNNER BLADE DETAIL

SECTION B-B

1:2.5

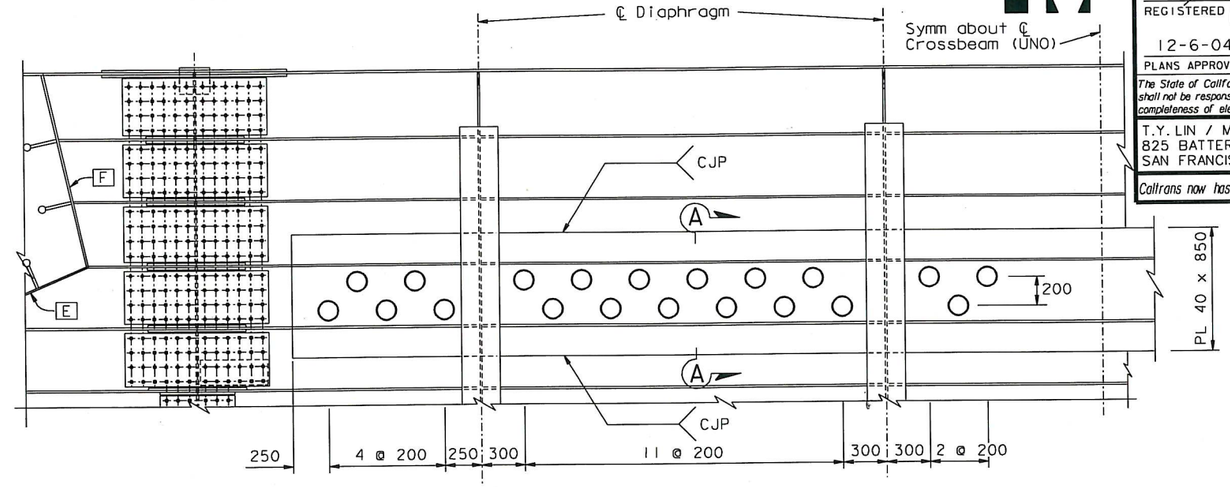

UTILITY OPENINGS AT PANEL POINTS 14, 32, 50, 80, 110 ONLY

DETAIL J

1:20

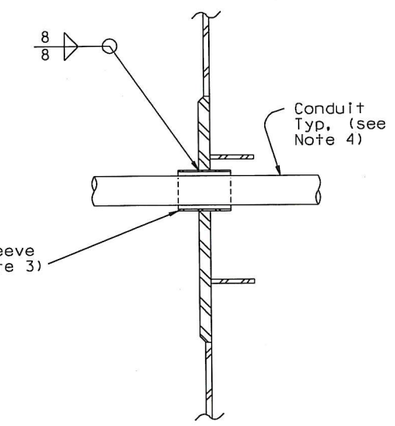

SECTION A-A

1:10

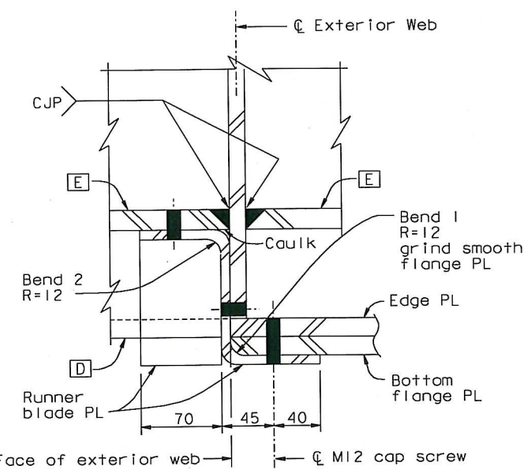

SECTION D-D

1:2.5

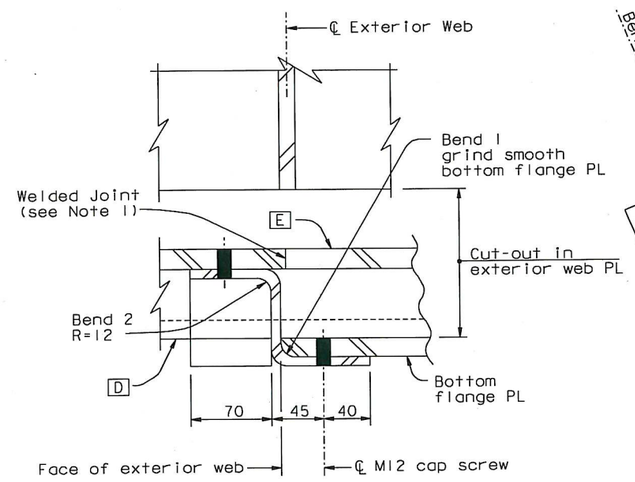

SECTION E-E

1:2.5

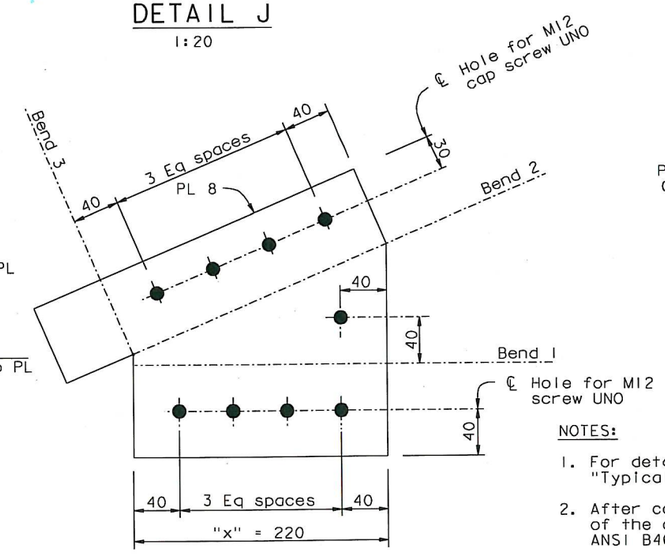

NOTE: Plate shown prior to bending

RUNNER BLADE PLATE LAYOUT

1:2.5

NOTES:

1. For detail of girder plate E welded joint, see "Typical Crossbeam Details No. 9" sheet.
2. After completion of welding, the finish surface of the cutout shall be 6 microns in accordance ANSI B46.1.
3. For pipe sleeve details not shown, see "Utility Details No. 1" sheet. Pipe sleeves not used for utility conduits in this contract shall be sealed with a steel threaded cap on the outside.
4. For conduit locations and sizes, see "Road Plans".
5. At PP118, PP120 and as required the exterior face of shim PL CJP welds shall be ground flush to ensure a tight fit of the runner blade.

Daniel J. Turner
REGISTERED PROFESSIONAL ENGINEER Daniel J. Turner No. C 65033 Exp. 06/30/13 CIVIL STATE OF CALIFORNIA

FOR REVISIONS ONLY

CONTRACT CHANGE ORDER NO. 87
SHEET 23 OF 115

REQUESTS FOR INFORMATION NOT ADDRESSED IN THIS CCO REMAIN IN FORCE

ALL DIMENSIONS ARE IN MILLIMETERS UNLESS OTHERWISE SHOWN

MARK	DATE	DESCRIPTIONS	BY	CH'D	CCO#
1	09/01/11	EAST END OBG	DT	GB	87

REVISIONS

R. Valizadeh/V. Toan/Y.L./W.L./F.C.
DESIGN OVERSIGHT
Roya Valizadeh / Vong Toan / Y. Liu
SIGN OFF DATE 09/01/11

DESIGN BY G. Baker CHECKED P. Ritchie
DETAILS BY D. Veytsman CHECKED T. McMeans
QUANTITIES BY G. Baker CHECKED M. Roberts

PREPARED FOR THE STATE OF CALIFORNIA DEPARTMENT OF TRANSPORTATION

R. Manzanarez
PROJECT ENGINEER

BRIDGE NO. 34-0006L/R
KILOMETER POST 13.2/13.9

SAN FRANCISCO OAKLAND BAY BRIDGE
EAST SPAN SEISMIC SAFETY PROJECT
SELF-ANCHORED SUSPENSION BRIDGE
(SUPERSTRUCTURE & TOWER)

TYPICAL CROSSBEAM DETAILS NO. 10

Rev. Date: 5-18-98

ORIGINAL SCALE IN MILLIMETERS FOR REDUCED PLANS 0 10 20 30 40 50 60 70 80 90 100

CU 04
EA 0120F1

DISREGARD PRINTS BEARING EARLIER REVISION DATES

REVISION DATES (PRELIMINARY STAGE ONLY) 05/15/99 08/02/99 05/31/01 01/08/02 01/07/02 12/19/02

SHEET 247R1 OF

FILE => I:\bb\04-012001\sas\contract plans and cco\cco\cco#87\1-original 09-01-11\dgn\agcrs10.dgn

USERNAME => grivera DATE PLOTTED => 30 AUG 2011 TIME PLOTTED => 16:27:20

100% PS&E

DIST.	COUNTY	ROUTE	KILOMETER POST TOTAL PROJECT	SHEET NO.	TOTAL SHEETS
04	SF	80	13.2/13.9	674R1	1204

George Baker
REGISTERED ENGINEER - CIVIL

12-6-04
PLANS APPROVAL DATE

REGISTERED PROFESSIONAL ENGINEER George S. Baker No. C 57112 Exp. 12/31/05 CIVIL STATE OF CALIFORNIA

The State of California or its officers or agents shall not be responsible for the accuracy or completeness of electronic copies of this plan sheet.

T.Y. LIN / MOFFATT & NICHOL
825 BATTERY STREET
SAN FRANCISCO, CA 94111

Caltrans now has a web site! To get to the web site, go to: http://www.dot.ca.gov

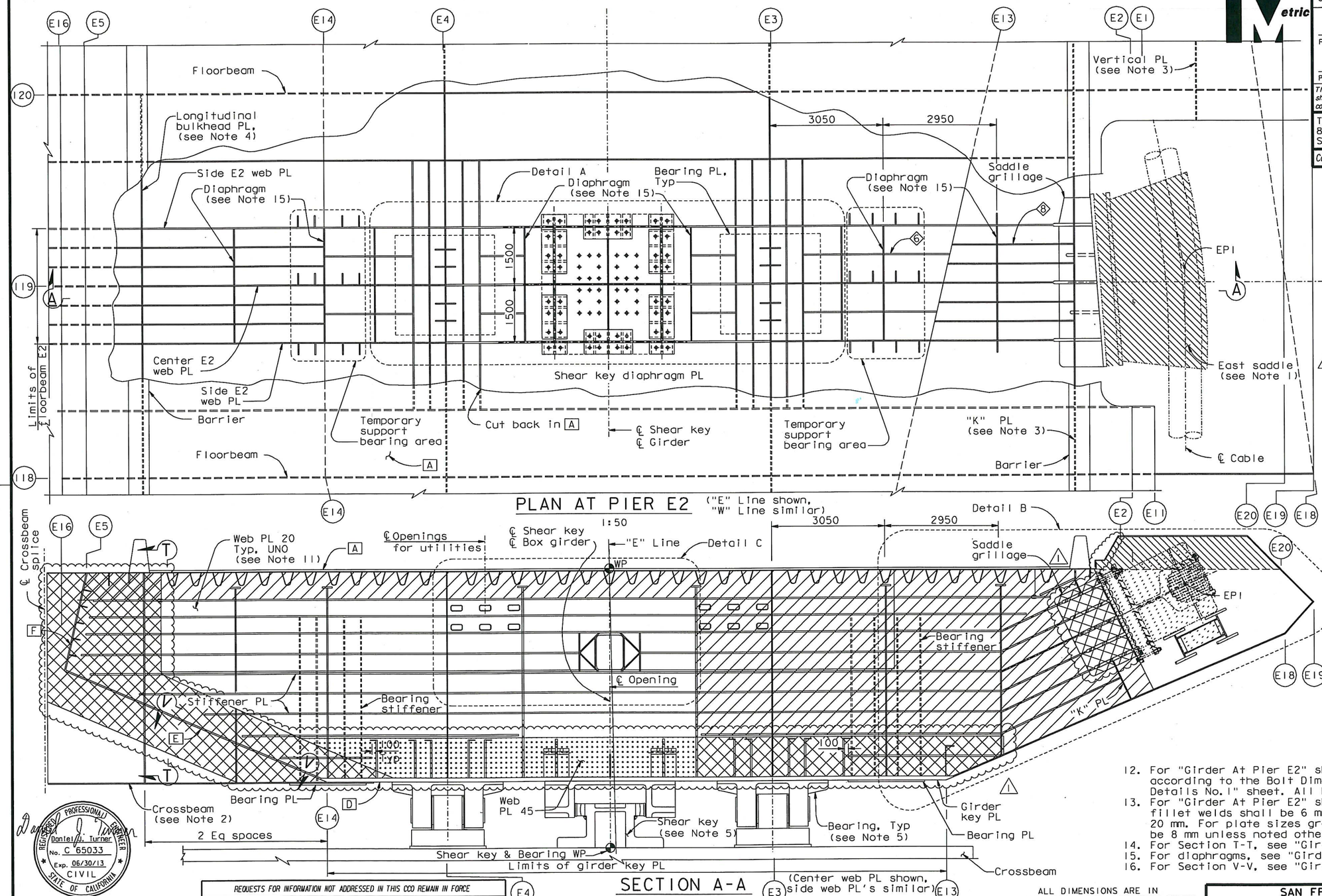

LEGEND:

- East saddle (see Note 1)
- Saddle housing (see Note 7)
- "Indicates SPCM web PL"
- "Indicates TTP web PL"
- "Indicates SPCM & TTP web PL"

NOTES:

1. For saddle details, see "East Saddle Details" sheets.
2. For crossbeam, see "Crossbeam At Pier E2" sheets.
3. For "K" PL and vertical PL details, see "Girder At East Transition Details" sheets.
4. For longitudinal bulkhead PL details, see "Girder At Pier E2 No.9" sheet.
5. For shear key & bearing details, see "Pier E2 Shear Key Details" and "Pier E2 Bearing Details" sheets.
6. For clarity, typical girder stiffeners are not shown in plan.
7. For saddle housing details, see "Saddle Housing Details" sheets.
8. For Detail A, see "Girder At Pier E2 No.2" sheet.
9. For Detail B, see "Girder At Pier E2 No.5" sheet.
10. For Detail C, see "Girder At Pier E2 No.4" sheet.
11. For E2 floorbeam web layout, see "Girder At Pier E2 No.4" sheet.
12. For "Girder At Pier E2" sheets, all bolts shall be detailed according to the Bolt Dimension Table. See "Typical Girder Details No.1" sheet. All bolts are HS unless noted otherwise.
13. For "Girder At Pier E2" sheets, unless noted otherwise, all fillet welds shall be 6 mm for plate sizes not greater than 20 mm. For plate sizes greater than 20 mm, fillet welds shall be 8 mm unless noted otherwise.
14. For Section T-T, see "Girder At Pier E2 No.9" sheet.
15. For diaphragms, see "Girder At Pier E2 No.6" sheet.
16. For Section V-V, see "Girder at Pier E2 No.9" sheet.

Daniel J. Turner
REGISTERED PROFESSIONAL ENGINEER Daniel J. Turner No. C 65033 Exp. 06/30/13 CIVIL STATE OF CALIFORNIA

FOR REVISIONS ONLY

REQUESTS FOR INFORMATION NOT ADDRESSED IN THIS CCO REMAIN IN FORCE

ALL DIMENSIONS ARE IN MILLIMETERS UNLESS OTHERWISE SHOWN

MARK	DATE	DESCRIPTIONS	BY	CH'D	CCO#
1	03/09/12	EAST END OBG	DT	GB	87

REVISIONS

R. Vallzadeh/V. Toan/Y.L./W.L./F.C.
DESIGN OVERSIGHT
Roya Valizadeh / Vonyl Toan / Y. Liu
SIGN OFF DATE 03/09/12

Rev. Date: 5-18-98

CONTRACT CHANGE ORDER NO. 87
SHEET 24 OF 115

DESIGN	BY G. Baker	CHECKED	P. Ritchie
DETAILS	BY C. Mauch	CHECKED	T. McMeans
QUANTITIES	BY D. Turner	CHECKED	M. Roberts

PREPARED FOR THE STATE OF CALIFORNIA DEPARTMENT OF TRANSPORTATION

R. Manzanarez
PROJECT ENGINEER

BRIDGE NO. 34-0006L/R
KILOMETER POST 13.2/13.9

SAN FRANCISCO OAKLAND BAY BRIDGE
EAST SPAN SEISMIC SAFETY PROJECT
SELF-ANCHORED SUSPENSION BRIDGE
(SUPERSTRUCTURE & TOWER)

GIRDER AT PIER E2 NO. 1

ORIGINAL SCALE IN MILLIMETERS FOR REDUCED PLANS 0 10 20 30 40 50 60 70 80 90 100

CU 04
EA 0120F1

DISREGARD PRINTS BEARING EARLIER REVISION DATES

REVISION DATES (PRELIMINARY STAGE ONLY) 05/15/99 09/02/99 05/31/01 04/08/02 07/01/02 12/19/02 10/13/05 11/13/05 12/01/05

SHEET 257R1 OF

FILE => I:\bb\04-0120F1\sas\contract plans and cco\cco\cco#87\2-update 03-09-12\dgn\aggdd06.dgn

100 % PS&E

USERNAME => DWinrow DATE PLOTTED => 09 MAR 2012 TIME PLOTTED => 10:01:51

DIST.	COUNTY	ROUTE	KILOMETER POST TOTAL PROJECT	SHEET NO.	TOTAL SHEETS
04	SF	80	13.2/13.9	675R3	1204

George Baker
REGISTERED ENGINEER - CIVIL

12-6-04
PLANS APPROVAL DATE

REGISTERED PROFESSIONAL ENGINEER George S. Baker No. C 57112 Exp. 12/31/05 CIVIL STATE OF CALIFORNIA

The State of California or its officers or agents shall not be responsible for the accuracy or completeness of electronic copies of this plan sheet.

T.Y. LIN / MOFFATT & NICHOL
825 BATTERY STREET
SAN FRANCISCO, CA 94111

Caltrans now has a web site! To get to the web site, go to: http://www.dot.ca.gov

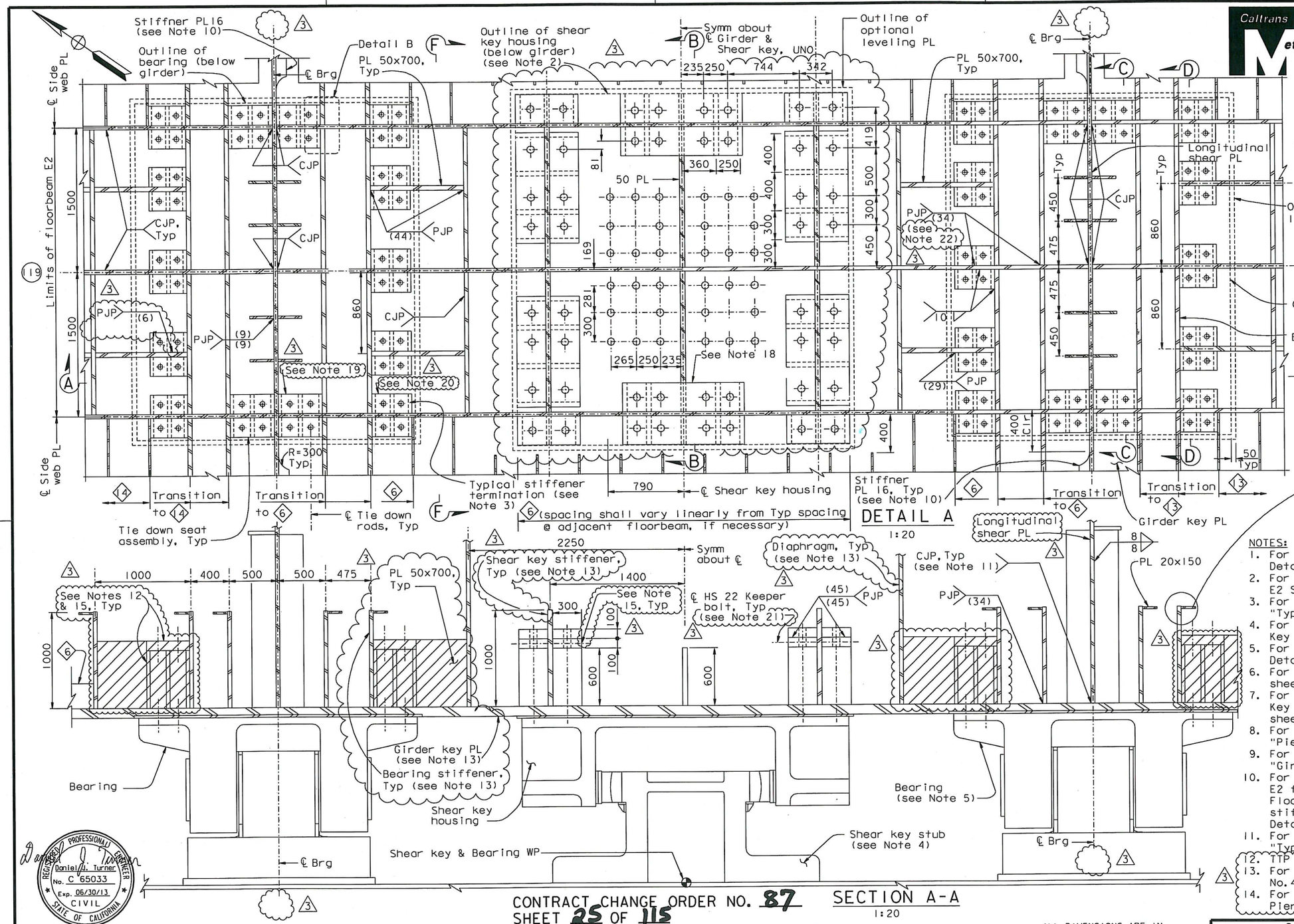

LEGEND

- ⊕ - 75 Dia anchor bolt (A354 Gr. BD) (see Note 15)
- ⊕ - 50 Dia anchor bolt (A354 Gr. BD) (see Note 15)
- t - Thickness of terminating PL in T-joint
- "Indicates TTP Web PL"

NOTES:

1. For girder PL thickness, see "Typical Girder Details No.1" sheet.
2. For details of shear key housing, see "Pier E2 Shear Key" sheets.
3. For typical girder stiffener termination, see "Typical Girder Details No.16" sheet.
4. For details of shear key, see "Pier E2 Shear Key Details" sheets.
5. For details of bearing, see "Pier E2 Bearing Details" sheets.
6. For Section F-F, see "Girder At Pier E2 No.6" sheet.
7. For bolt and rod locations, see "Pier E2 Shear Key Details" and "Pier E2 Bearing Details" sheets.
8. For Pier E2 bearing and shear key location, see "Pier E2 Bearing And Shear Key Layout" sheet.
9. For Sections B-B, C-C, D-D and Detail B, see "Girder At Pier E2 No.3" sheet.
10. For termination of stiffener PL 16 at E2 floorbeam, see Detail G on "Typical Floorbeam Details No.4" sheet. For other stiffener details, see "Typical Girder Details No.7" sheet.
11. For extent of CJP weld, see Note 12 on "Typical Girder Details No.7" sheet.
12. TTP not required for seat assembly, Typ.
13. For other TTP plates, see " General Notes No.4" sheet.
14. For Notes 15 and above, see "Girder at Pier E2 No. 2A" sheet.

CONTRACT CHANGE ORDER NO. 87
SHEET 25 OF 115

REQUESTS FOR INFORMATION NOT ADDRESSED IN THIS CCO REMAIN IN FORCE

ALL DIMENSIONS ARE IN MILLIMETERS UNLESS OTHERWISE SHOWN

Daniel J. Turner
REGISTERED PROFESSIONAL ENGINEER No. C 65033 Exp. 06/30/13 CIVIL STATE OF CALIFORNIA

FOR REVISIONS ONLY

MARK	DATE	DESCRIPTIONS	BY	CH'D	CCO#
3	03/09/12	EAST END OBG	DT	GB	87
2	07/31/09	LONGITUDINAL SHEAR PLATE	DT	GB	122
1	07/30/07	HINGE A REACTION-SHEAR PLATES	DT	GB	50

REVISIONS

R. Valizadeh/V. Toan/Y.L./W.L./F.C.
DESIGN OVERSIGHT
SIGN OFF DATE 03/09/12

Rev. Date: 5-18-98

DESIGN	BY G. Baker	CHECKED	P. Ritchie
DETAILS	BY C. Mauch	CHECKED	T. McMeans
QUANTITIES	BY D. Turner	CHECKED	M. Roberts

ORIGINAL SCALE IN MILLIMETERS FOR REDUCED PLANS 0 10 20 30 40 50 60 70 80 90 100

PREPARED FOR THE STATE OF CALIFORNIA DEPARTMENT OF TRANSPORTATION

R. Manzanarez
PROJECT ENGINEER

CU 04
EA 0120F1

BRIDGE NO. 34-0006L/R
KILOMETER POST 13.2/13.9

SAN FRANCISCO OAKLAND BAY BRIDGE
EAST SPAN SEISMIC SAFETY PROJECT
SELF-ANCHORED SUSPENSION BRIDGE
(SUPPERSTRUCTURE & TOWER)

GIRDER AT PIER E2 NO.2

DISREGARD PRINTS BEARING EARLIER REVISION DATES

REVISION DATES (PRELIMINARY STAGE ONLY) 05/15/99 08/27/99 05/21/01 04/08/02 07/08/02 12/19/02 10/13/05 11/15/05 12/01/05

SHEET 258R3 OF

FILE => I:\bb\04-012001\sas\contract plans and cco\cco\cco#87\2-update 03-09-12\dgn\aggdd07.dgn

USERNAME => DWinrow DATE PLOTTED => 09 MAR 2012 TIME PLOTTED => 10:02:42

100 % PS&E

DIST.	COUNTY	ROUTE	KILOMETER POST TOTAL PROJECT	SHEET NO.	TOTAL SHEETS
04	SF	80	13.2/13.9	675S1	1204

Caltrans Metric

Daniel J. Turner
REGISTERED ENGINEER - CIVIL

03-09-12
PLANS APPROVAL DATE

REGISTERED PROFESSIONAL ENGINEER
Daniel J. Turner
No. C 65033
Exp. 06/30/13
CIVIL
STATE OF CALIFORNIA

The State of California or its officers or agents shall not be responsible for the accuracy or completeness of electronic copies of this plan sheet.

T.Y. LIN / MOFFATT & NICHOL
825 BATTERY STREET
SAN FRANCISCO, CA 94111

Caltrans now has a web site! To get to the web site, go to: http://www.dot.ca.gov

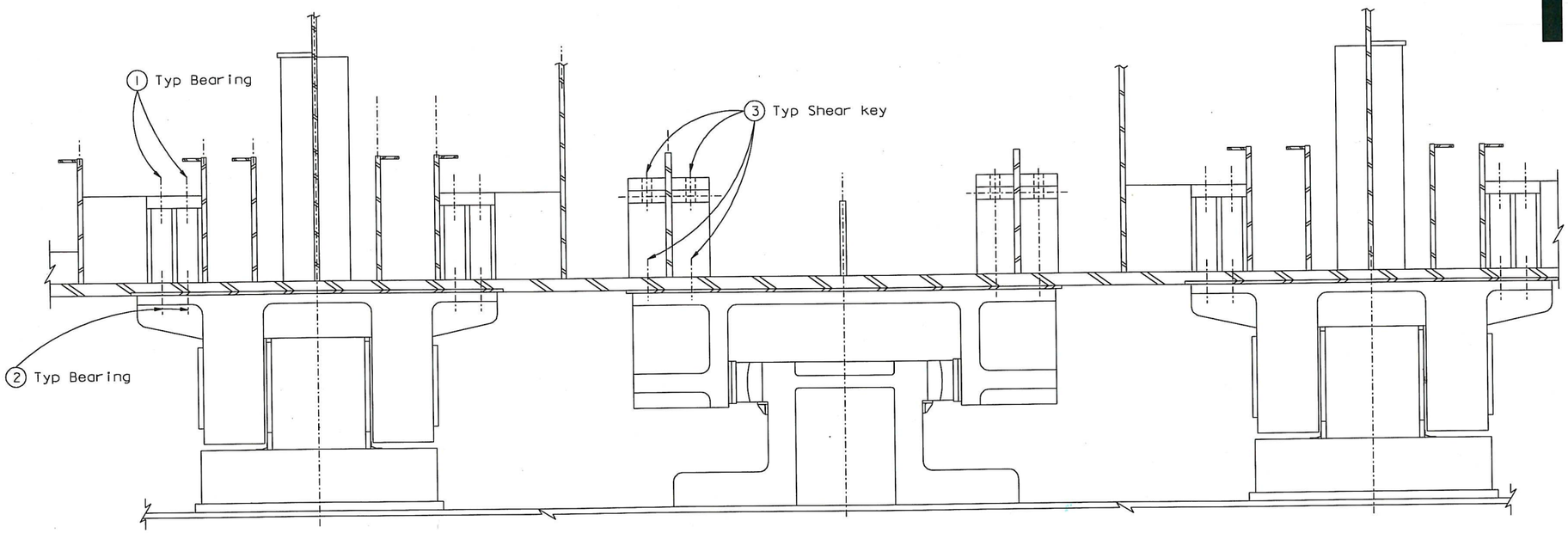

SECTION A-A (See Note 15)
1:20

NOTES:

15. At the Contractor's option, oversize holes may be used for the anchor bolt and keeper bolt in the top anchor plates of the seat assemblies, and in the key PL.

16. At the Contractor's option, an equivalent PJP may be used in lieu of a double sided fillet weld.

17. At the Contractor's option, the flange may be placed on the opposite side of the bearing stiffener.

18. At the Contractor's option, the top bearing PL may be detailed to overhang the side stiffener plates by 5 mm, subject to review and approval of the Engineer.

19. At the Contractor's option, the top bearing PL may be detailed to provide 5 mm gap at the floorbeams and abutting longitudinal members.

20. At the Contractor's option, the top bearing PL may be detailed to provide 5 mm gap at the abutting longitudinal members.

21. At the Contractor's option, keeper bolts may be placed in the upper top bearing plate. Oversized holes may be used in the bearing plates and vertical plates at keeper bolt locations, subject to review and approval of the Engineer.

22. At the Contractor's option, double-sided 24 mm fillet may be used on selected stiffener to floorbeam welds, subject to review and approval of the Engineer.

100 % PS&E

USERNAME => DWTnrow DATE PLOTTED => 09 MAR 2012 TIME PLOTTED => 10:03:37

CONTRACT CHANGE ORDER NO. 87
SHEET 26 OF 115

REQUESTS FOR INFORMATION NOT ADDRESSED IN THIS CCO REMAIN IN FORCE

ALL DIMENSIONS ARE IN MILLIMETERS UNLESS OTHERWISE SHOWN

R. Vallizadeh/V. Toan/Y.L./W.L./F.C.
DESIGN OVERSIGHT
Roya Vallizadeh / Vong Toan / Y. Liu
SIGN OFF DATE 03/09/12

MARK	DATE	DESCRIPTIONS	BY	CH'D	CCO#
0	03/09/12	EAST END OBG	DT	GB	87

REVISIONS

DESIGN	BY D. Turner	CHECKED G. Baker	
DETAILS	BY D. Turner	CHECKED G. Baker	
QUANTITIES	BY D. Turner	CHECKED G. Baker	

PREPARED FOR THE STATE OF CALIFORNIA DEPARTMENT OF TRANSPORTATION

R. Manzanarez
PROJECT ENGINEER

BRIDGE NO. 34-0006L/R
KILOMETER POST 13.2/13.9

SAN FRANCISCO OAKLAND BAY BRIDGE
EAST SPAN SEISMIC SAFETY PROJECT
SELF-ANCHORED SUSPENSION BRIDGE
(SUPPERSTRUCTURE & TOWER)

GIRDER AT PIER E2 NO. 2A

Rev. Date: 5-18-98

ORIGINAL SCALE IN MILLIMETERS FOR REDUCED PLANS 0 10 20 30 40 50 60 70 80 90 100

CU 04
EA 0120F1

DISREGARD PRINTS BEARING EARLIER REVISION DATES

REVISION DATES (PRELIMINARY STAGE ONLY) 03/09/12

SHEET 258S1 OF

FILE => I:\bb\04-012001\sas\contract plans and cco\cco\cco#87\2-update 03-09-12\dgn\aggdd07a.dgn

DIST.	COUNTY	ROUTE	KILOMETER POST TOTAL PROJECT	SHEET NO.	TOTAL SHEETS
04	SF	80	13.2/13.9	676R1	1204

George Baker
REGISTERED ENGINEER - CIVIL
12-6-04
PLANS APPROVAL DATE

REGISTERED PROFESSIONAL ENGINEER George S. Baker No. C 57112 Exp. 12/31/05 CIVIL STATE OF CALIFORNIA

The State of California or its officers or agents shall not be responsible for the accuracy or completeness of electronic copies of this plan sheet.

T.Y. LIN / MOFFATT & NICHOL
825 BATTERY STREET
SAN FRANCISCO, CA 94111

Caltrans now has a web site! To get to the web site, go to: http://www.dot.ca.gov

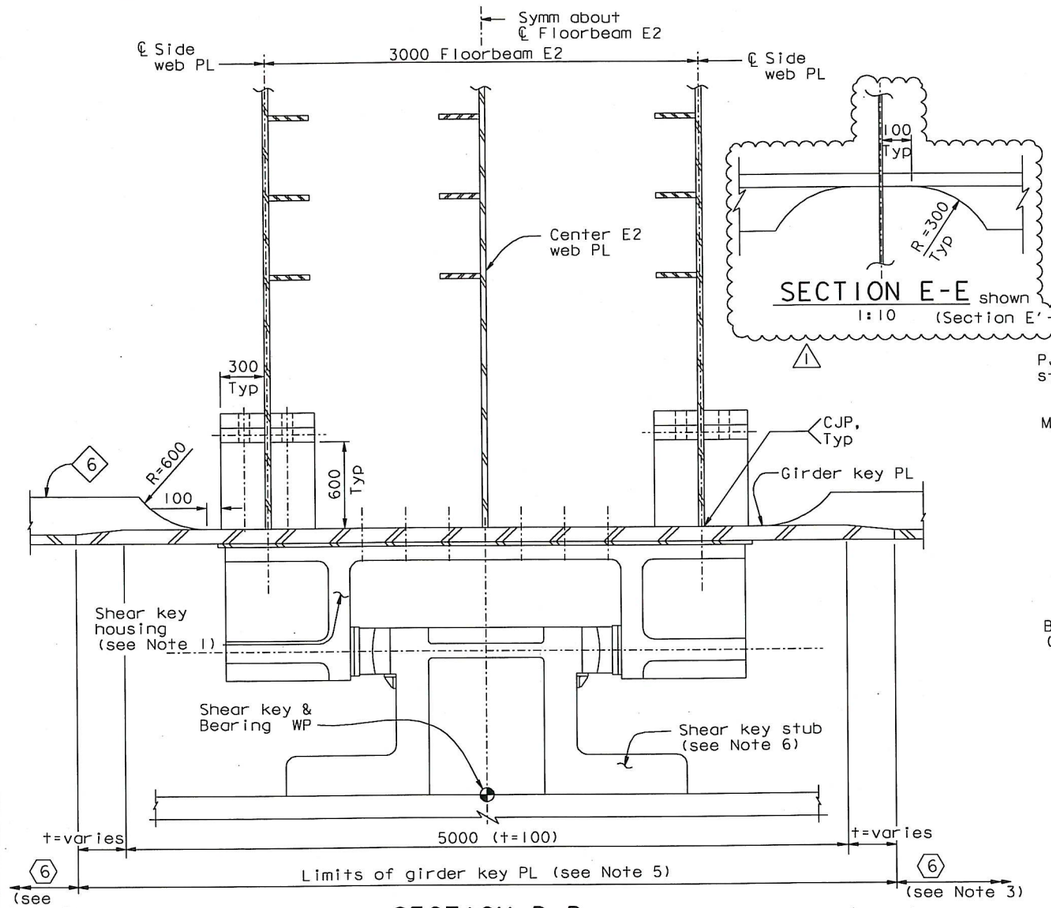

SECTION B-B
1:20

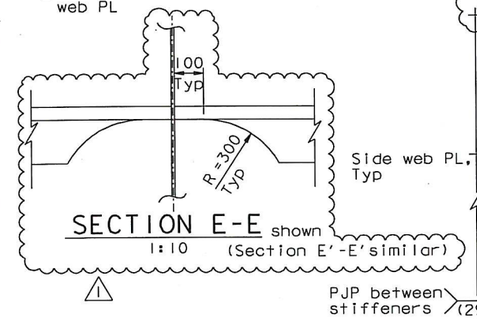

SECTION E-E shown
1:10 (Section E'-E' similar)

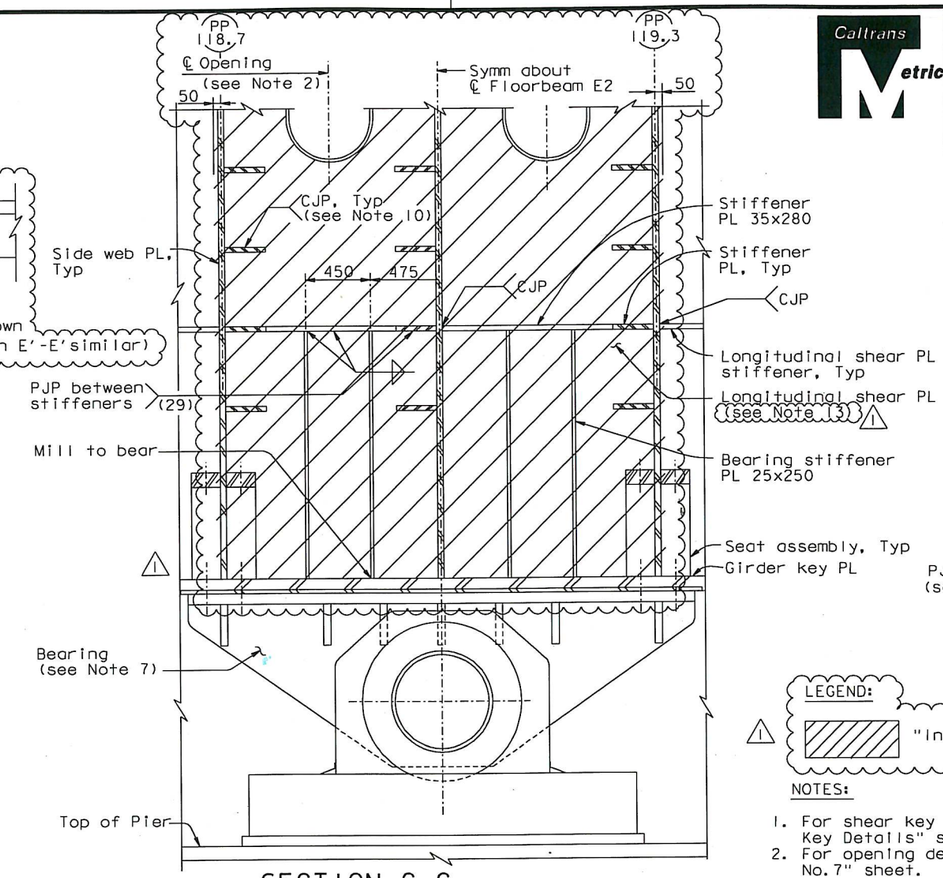

SECTION C-C
1:20

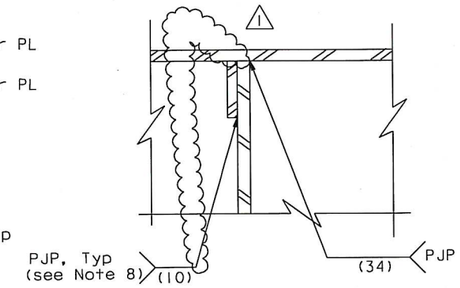

DETAIL B - ALTERNATIVE STIFFENER WELD
1:10

LEGEND:
1 "Indicates TTP Web PL"

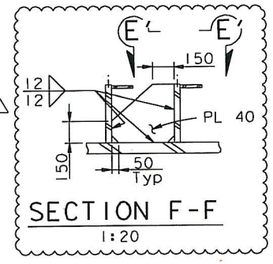

SECTION F-F
1:20

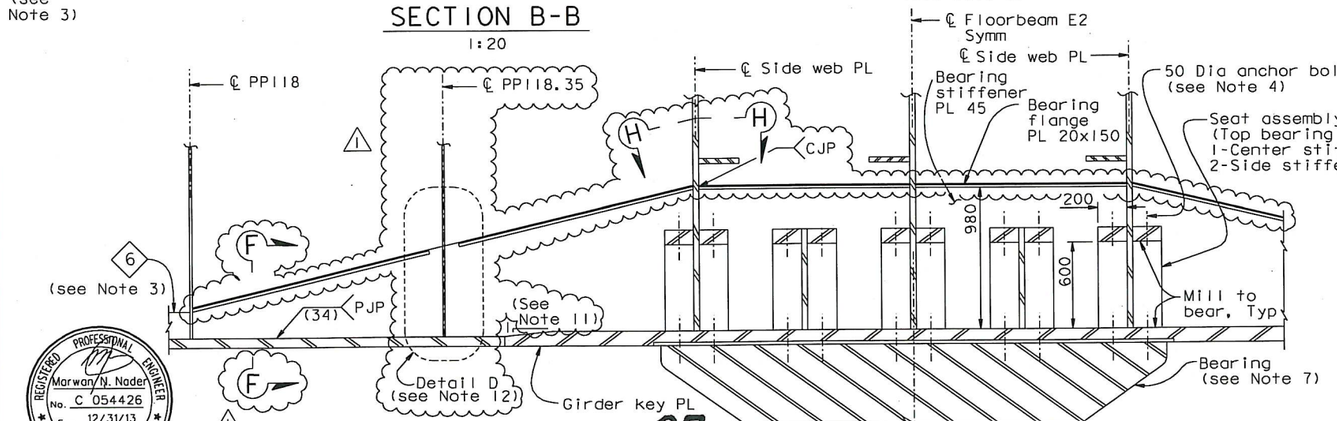

SECTION D-D
1:20

NOTES:

1. For shear key housing details, see "Pier E2 Shear Key Details" sheet.
2. For opening details, see "Typical Girder Details No.7" sheet.
3. For typical girder details not shown, see "Typical Girder Details" sheets.
4. For anchor bolt, see "Pier E2 Bearing Details" sheets.
5. For transverse limits of girder key PL, see "Girder At Pier E2 No.1" sheet.
6. For shear key details, see "Pier E2 Shear Key Details" sheets.
7. For Pier E2 bearing details, see "Pier E2 Bearing Details" sheets.
8. For bearing stiffeners in faying contact with diaphragms or webs, stiffener corners and welds may be ground to allow fit-up.
9. Leveling PL may be used to compensate for the permissible out-of-flatness of the girder key plate. Leveling plates shall be tapered as required to ensure proper alignment of the bearings and shear keys in both longitudinal and transverse directions.
10. Stiffeners welded to the longitudinal shear PL shall be coped. See stiffener type 9 in similar Section D-D on "Typical Crossbeam Details No.6" sheet.
11. At the Contractor's option and subject to review and approval of the Engineer, a 1:2.5 taper may be used in lieu of the 1:10 taper. The overall width of the girder key PL shall remain 5800 mm.
12. For Detail D and Section H-H, see "Girder At Pier E2 No.3A" sheet.
13. The longitudinal shear PL shall have Through Thickness Properties (TTP).

REGISTERED PROFESSIONAL ENGINEER Marwan N. Nader No. C 054426 Exp. 12/31/13 CIVIL STATE OF CALIFORNIA

FOR REVISIONS ONLY

CONTRACT CHANGE ORDER NO. 87
SHEET 27 OF 115

REQUESTS FOR INFORMATION NOT ADDRESSED IN THIS CCO REMAIN IN FORCE

ALL DIMENSIONS ARE IN MILLIMETERS UNLESS OTHERWISE SHOWN

R. Valizadeh/V. Toan/Y.L./W.L./F.C.
DESIGN OVERSIGHT
SIGN OFF DATE 04/18/12

MARK	DATE	DESCRIPTIONS	BY	CH'D	CCO#
1	04/18/12	EAST END OBG	GB	MN	87

REVISIONS

DESIGN	BY G. Baker	CHECKED P. Ritchie	
DETAILS	BY C. Mauch	CHECKED T. McMeans	
QUANTITIES	BY D. Turner	CHECKED M. Roberts	

PREPARED FOR THE STATE OF CALIFORNIA DEPARTMENT OF TRANSPORTATION

R. Manzanarez
PROJECT ENGINEER

BRIDGE NO. 34-0006L/R
KILOMETER POST 13.2/13.9

SAN FRANCISCO OAKLAND BAY BRIDGE
EAST SPAN SEISMIC SAFETY PROJECT
SELF-ANCHORED SUSPENSION BRIDGE
(SUPERSTRUCTURE & TOWER)

GIRDER AT PIER E2 NO.3

Rev. Date: 5-18-98

ORIGINAL SCALE IN MILLIMETERS FOR REDUCED PLANS 0 10 20 30 40 50 60 70 80 90 100

CU 04
EA 0120F1

DISREGARD PRINTS BEARING EARLIER REVISION DATES

REVISION DATES (PRELIMINARY STAGE ONLY) 5/15/99 08/02/99 05/31/01 01/08/02 07/01/02 12/19/02 10/13/05 11/13/05 12/01/05

SHEET 259R1 OF

FILE => I:\bb\04-01200I\sas\contract plans and cco\cco\cco#87\temp\aggdd08.dgn

USERNAME => DWinrow DATE PLOTTED => 18 APR 2012 TIME PLOTTED => 11:07:13

100% PS&E

DIST.	COUNTY	ROUTE	KILOMETER POST TOTAL PROJECT	SHEET NO.	TOTAL SHEETS
04	SF	80	13.2/13.9	676S1	1204

REGISTERED ENGINEER - CIVIL

04-18-12
PLANS APPROVAL DATE

REGISTERED PROFESSIONAL ENGINEER Marwan N. Nader No. C 054426 Exp. 12/31/13 CIVIL STATE OF CALIFORNIA

The State of California or its officers or agents shall not be responsible for the accuracy or completeness of electronic copies of this plan sheet.

T.Y. LIN / MOFFATT & NICHOL
825 BATTERY STREET
SAN FRANCISCO, CA 94111

Caltrans now has a web site! To get to the web site, go to: http://www.dot.ca.gov

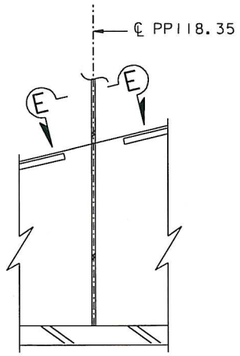

ALTERNATIVE 1

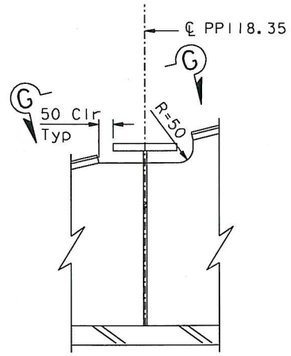

ALTERNATIVE 2

DETAIL D
1:10

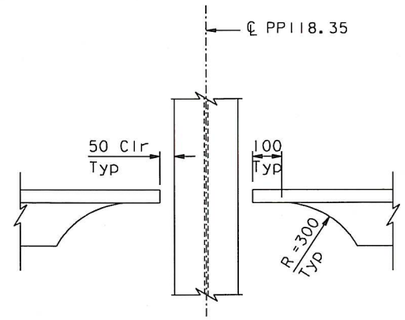

SECTION G-G
1:10

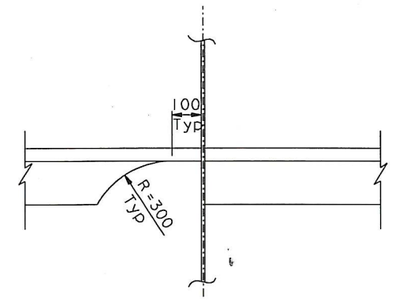

SECTION H-H
1:10

NOTES:

1. For Section E-E, see "Girder At Pier E2 No. 3" sheet.

100 % PS&E

CONTRACT CHANGE ORDER NO. 87
SHEET 28 OF 115

REQUESTS FOR INFORMATION NOT ADDRESSED IN THIS CCO REMAIN IN FORCE

ALL DIMENSIONS ARE IN MILLIMETERS UNLESS OTHERWISE SHOWN

R. Vallzadeh/V. Toan/Y.L./W.L./F.C.
DESIGN OVERSIGHT
SIGN OFF DATE 04/18/12

MARK	DATE	DESCRIPTIONS	BY	CH'D	CCO#
0	04/18/12	EAST END OBG	GB	MN	87

REVISIONS

DESIGN	BY G. Baker	CHECKED M. Nader	
DETAILS	BY G. Baker	CHECKED D. Turner	
QUANTITIES	BY G. Baker	CHECKED D. Turner	

PREPARED FOR THE STATE OF CALIFORNIA DEPARTMENT OF TRANSPORTATION

R. Manzanarez
PROJECT ENGINEER

BRIDGE NO. 34-0006L/R
KILOMETER POST 13.2/13.9

SAN FRANCISCO OAKLAND BAY BRIDGE
EAST SPAN SEISMIC SAFETY PROJECT
SELF-ANCHORED SUSPENSION BRIDGE
(SUPERSTRUCTURE & TOWER)

GIRDER AT PIER E2 NO. 3A

Rev. Date: 5-18-98

ORIGINAL SCALE IN MILLIMETERS FOR REDUCED PLANS 0 10 20 30 40 50 60 70 80 90 100

CU 04
EA 0120F1

DISREGARD PRINTS BEARING EARLIER REVISION DATES

REVISION DATES (PRELIMINARY STAGE ONLY) 04/18/12

SHEET 259S1 OF

FILE => I:\bb\04-012001\sas\contract plans and cco\cco\cco#87\temp\aggdd08a.dgn

USERNAME => DWinrow DATE PLOTTED => 18 APR 2012 TIME PLOTTED => 11:08:16

DIST.	COUNTY	ROUTE	KILOMETER POST TOTAL PROJECT	SHEET NO.	TOTAL SHEETS
04	SF	80	13.2/13.9	677R1	1204

Caltrans Metric

George Baker
REGISTERED ENGINEER - CIVIL
12-6-04
PLANS APPROVAL DATE

REGISTERED PROFESSIONAL ENGINEER George S. Baker No. C 57112 Exp. 12/31/05 CIVIL STATE OF CALIFORNIA

The State of California or its officers or agents shall not be responsible for the accuracy or completeness of electronic copies of this plan sheet.

T.Y. LIN / MOFFATT & NICHOL
825 BATTERY STREET
SAN FRANCISCO, CA 94111

Caltrans now has a web site! To get to the web site, go to: http://www.dot.ca.gov

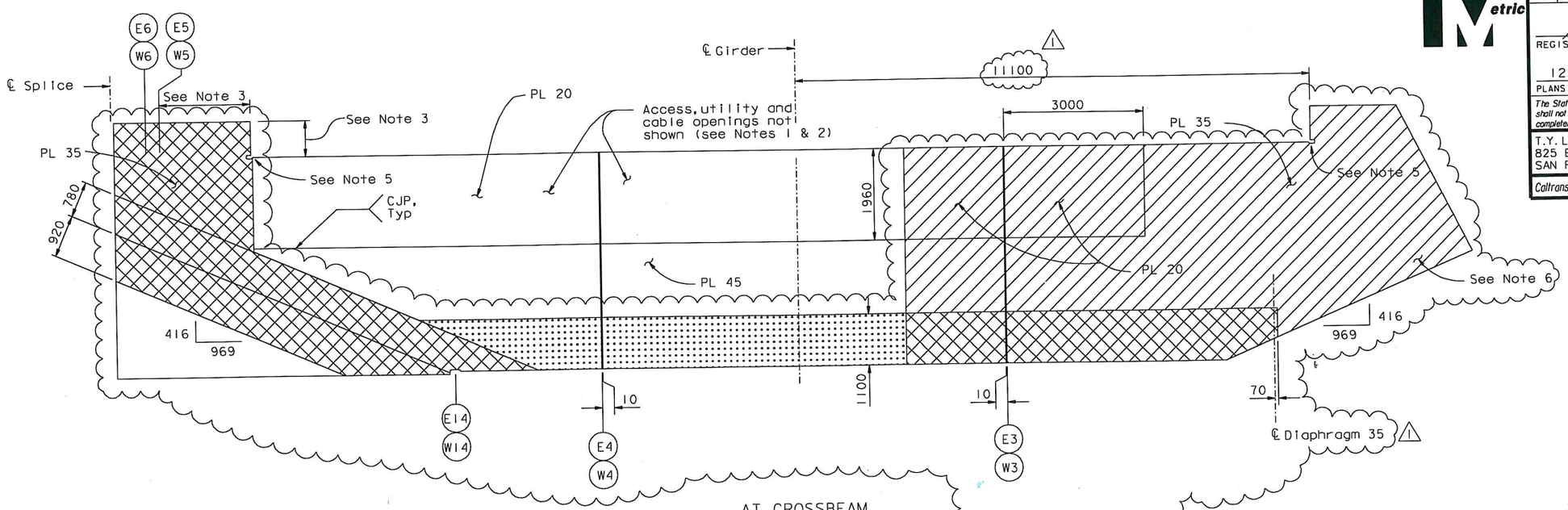

AT CROSSBEAM
FLOORBEAM WEB LAYOUT
(PP 118.7, 119.0, 119.3)
1:50

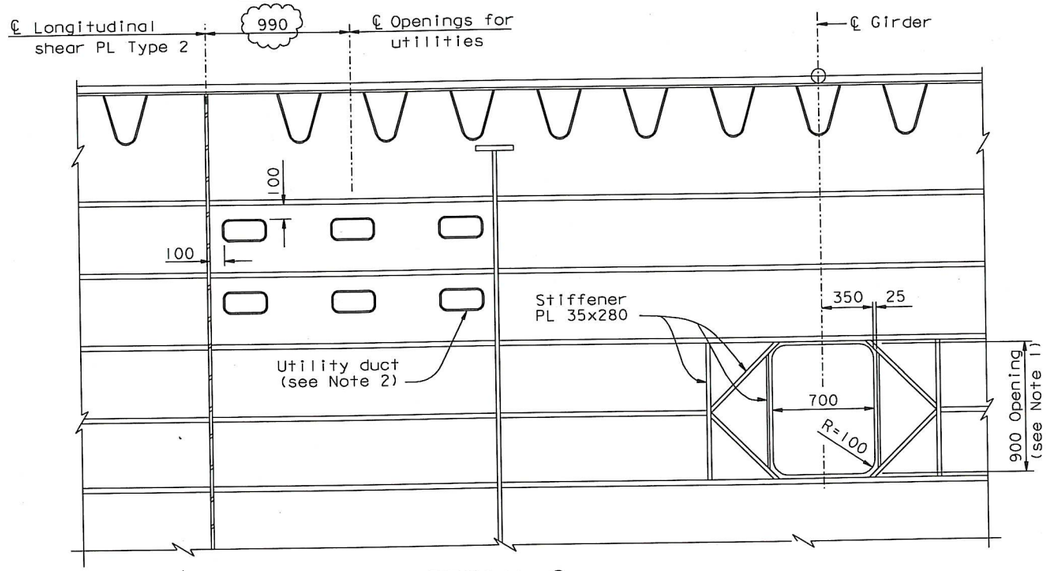

DETAIL C
1:20

LEGEND:
- "Indicates SPCM web PL"
- "Indicates TTP web PL"
- "Indicates SPCM & TTP web PL"

NOTES:
1. For opening details not shown, see "Typical Girder Details No. 7" sheets.
2. For utility details not shown, see "Utility Details" sheets.
3. For dimensions not shown, see "Partial Typical Sections", "Typical Girder Details" and "Girder At Pier E2 No. 1" sheets.
4. For stiffener cutouts, see "Typical Girder Details No. 3", "Typical Girder Details No. 5" and "Typical Girder Details No. 6" sheets.
5. For cutout detail, see "Typical Floorbeam Details No. 3" sheet.
6. For floorbeam web cutout at East Saddle Grillage, see "Girder At Pier E2 No. 5" sheet.

Daniel J. Turner
REGISTERED PROFESSIONAL ENGINEER Daniel J. Turner No. C 65033 Exp. 06/30/13 CIVIL STATE OF CALIFORNIA
FOR REVISIONS ONLY

CONTRACT CHANGE ORDER NO. 87
SHEET 29 OF 115

REQUESTS FOR INFORMATION NOT ADDRESSED IN THIS CCO REMAIN IN FORCE

ALL DIMENSIONS ARE IN MILLIMETERS UNLESS OTHERWISE SHOWN

MARK	DATE	DESCRIPTIONS	BY	CH'D	CCO#
1	09/01/11	EAST END OBG	GB	DT	87

REVISIONS

R. Vallzadeh/V. Toan/Y.L./W.L./F.C.
DESIGN OVERSIGHT
Roya Valizadeh / Vong Toan / Y. Lui
SIGN OFF DATE 09/01/11

Rev. Date: 5-18-98

DESIGN	BY C. Baker	CHECKED P. Ritchie	
DETAILS	BY C. Mauch	CHECKED T. McMeans	
QUANTITIES	BY D. Turner	CHECKED M. Roberts	

PREPARED FOR THE STATE OF CALIFORNIA DEPARTMENT OF TRANSPORTATION

R. Manzanarez
PROJECT ENGINEER

CU 04
EA 0120F1

BRIDGE NO. 34-0006L/R
KILOMETER POST 13.2/13.9

ORIGINAL SCALE IN MILLIMETERS FOR REDUCED PLANS 0 10 20 30 40 50 60 70 80 90 100

DISREGARD PRINTS BEARING EARLIER REVISION DATES

REVISION DATES (PRELIMINARY STAGE ONLY): 5/15/99 08/02/99 05/31/01 04/08/02 07/01/02 12/19/02 12/07/05

SHEET 260R1 OF

SAN FRANCISCO OAKLAND BAY BRIDGE
EAST SPAN SEISMIC SAFETY PROJECT
SELF-ANCHORED SUSPENSION BRIDGE
(SUPERSTRUCTURE & TOWER)
GIRDER AT PIER E2 NO. 4

FILE => I:\bb\04-0120FI\sas\contract plans and cco\cco\cco#87\1-original 09-01-11\dgn\aggdd09.dgn

100% PS&E
USERNAME => ALishansky DATE PLOTTED => 30 AUG 2011 TIME PLOTTED => 11:37:51

DIST.	COUNTY	ROUTE	KILOMETER POST TOTAL PROJECT	SHEET NO.	TOTAL SHEETS
04	SF	80	13.2/13.9	678R1	1204

George Baker
REGISTERED ENGINEER - CIVIL
12-6-04
PLANS APPROVAL DATE

REGISTERED PROFESSIONAL ENGINEER George S. Baker No. C 57112 Exp. 12/31/05 CIVIL STATE OF CALIFORNIA

The State of California or its officers or agents shall not be responsible for the accuracy or completeness of electronic copies of this plan sheet.

T.Y. LIN / MOFFATT & NICHOL
825 BATTERY STREET
SAN FRANCISCO, CA 94111

Caltrans now has a web site! To get to the web site, go to: http://www.dot.ca.gov

Caltrans Metric

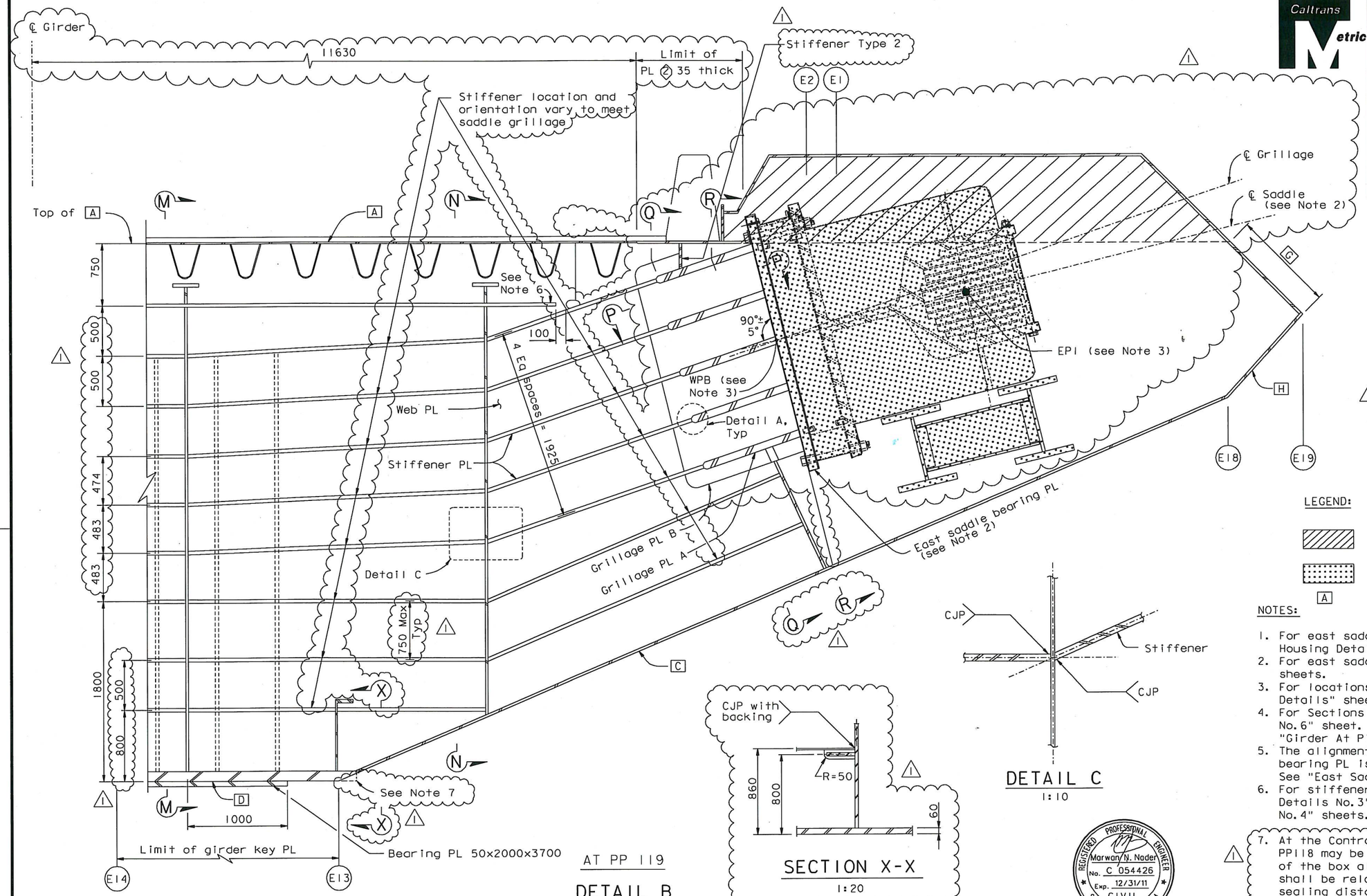

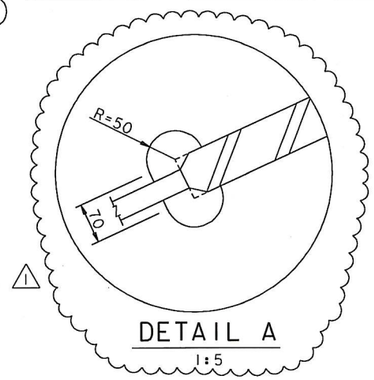

DETAIL A
1:5

DETAIL C
1:10

SECTION X-X
1:20

AT PP 119

DETAIL B
1:20

LEGEND:

- Limits of east saddle housing (see Note 1)
- East saddle (see Note 2)
- A Girder PL A

NOTES:

1. For east saddle housing details, see "East Saddle Housing Details" sheets.
2. For east saddle details, see "East Saddle Details" sheets.
3. For locations of EP1 and WPB, see "East Saddle Details" sheets.
4. For Sections M-M and N-N, see "Girder At Pier E2 No. 6" sheet. For Sections P-P, Q-Q and R-R, see "Girder At Pier E2 No. 7" sheet.
5. The alignment of the saddle grillage and saddle bearing PL is related to the saddle layout. See "East Saddle Details" sheets.
6. For stiffener terminations, see "Typical Floorbeam Details No. 3" and "Typical Floorbeam Details No. 4" sheets.
7. At the Contractor's option, the bearing PL 50 at PP118 may be trimmed flush with the bottom edge of the box along line W13. The bearing PL bolts shall be relocated so as to maintain minimum sealing distance along the bearing PL edge.
8. Final saddle grillage orientation shall be determined from final cable geometry.

REGISTERED PROFESSIONAL ENGINEER Marwan N. Nader No. C 054426 Exp. 12/31/11 CIVIL STATE OF CALIFORNIA

FOR REVISIONS ONLY

CONTRACT CHANGE ORDER NO. 87
SHEET 30 OF 115

REQUESTS FOR INFORMATION NOT ADDRESSED IN THIS CCO REMAIN IN FORCE

ALL DIMENSIONS ARE IN MILLIMETERS UNLESS OTHERWISE SHOWN

R. Valizadeh/V. Toan/Y.L./W.L./F.C.
DESIGN OVERSIGHT
Roya Valizadeh / Vong Toan / Y. Lee
SIGN OFF DATE 09/01/11

MARK	DATE	DESCRIPTIONS	BY	CH'D	CCO#
1	09/01/11	EAST END OBG	GB	MN	87

REVISIONS

DESIGN	BY G. Baker	CHECKED	P. Ritchie
DETAILS	BY C. Mauch	CHECKED	T. McMeans
QUANTITIES	BY D. Turner	CHECKED	M. Roberts

PREPARED FOR THE STATE OF CALIFORNIA DEPARTMENT OF TRANSPORTATION

R. Manzanarez
PROJECT ENGINEER

BRIDGE NO. 34-0006L/R
KILOMETER POST 13.2/13.9

SAN FRANCISCO OAKLAND BAY BRIDGE
EAST SPAN SEISMIC SAFETY PROJECT
SELF-ANCHORED SUSPENSION BRIDGE
(SUPERSTRUCTURE & TOWER)

GIRDER AT PIER E2 NO. 5

Rev. Date: 5-18-98

ORIGINAL SCALE IN MILLIMETERS FOR REDUCED PLANS 0 10 20 30 40 50 60 70 80 90 100

CU 04
EA 0120F1

DISREGARD PRINTS BEARING EARLIER REVISION DATES

REVISION DATES (PRELIMINARY STAGE ONLY) 05/18/99 08/02/99 05/24/01 04/08/02 07/01/02 12/19/02 12/07/05

SHEET 261R1 OF

FILE => I:\bb\04-0120F1\sas\contract plans and cco\cco\cco#87\1-original 09-01-11\dgn\aggdd10.dgn

USERNAME => ALishansky DATE PLOTTED => 30 AUG 2011 TIME PLOTTED => 11:39:23

100 % PS&E

DIST.	COUNTY	ROUTE	KILOMETER POST TOTAL PROJECT	SHEET NO.	TOTAL SHEETS
04	SF	80	13.2/13.9	679R1	1204

George Baker
REGISTERED ENGINEER - CIVIL
12-6-04
PLANS APPROVAL DATE

REGISTERED PROFESSIONAL ENGINEER George S. Baker No. C 57112 Exp. 12/31/05 CIVIL STATE OF CALIFORNIA

The State of California or its officers or agents shall not be responsible for the accuracy or completeness of electronic copies of this plan sheet.

T.Y. LIN / MOFFATT & NICHOL
825 BATTERY STREET
SAN FRANCISCO, CA 94111

Caltrans now has a web site! To get to the web site, go to: http://www.dot.ca.gov

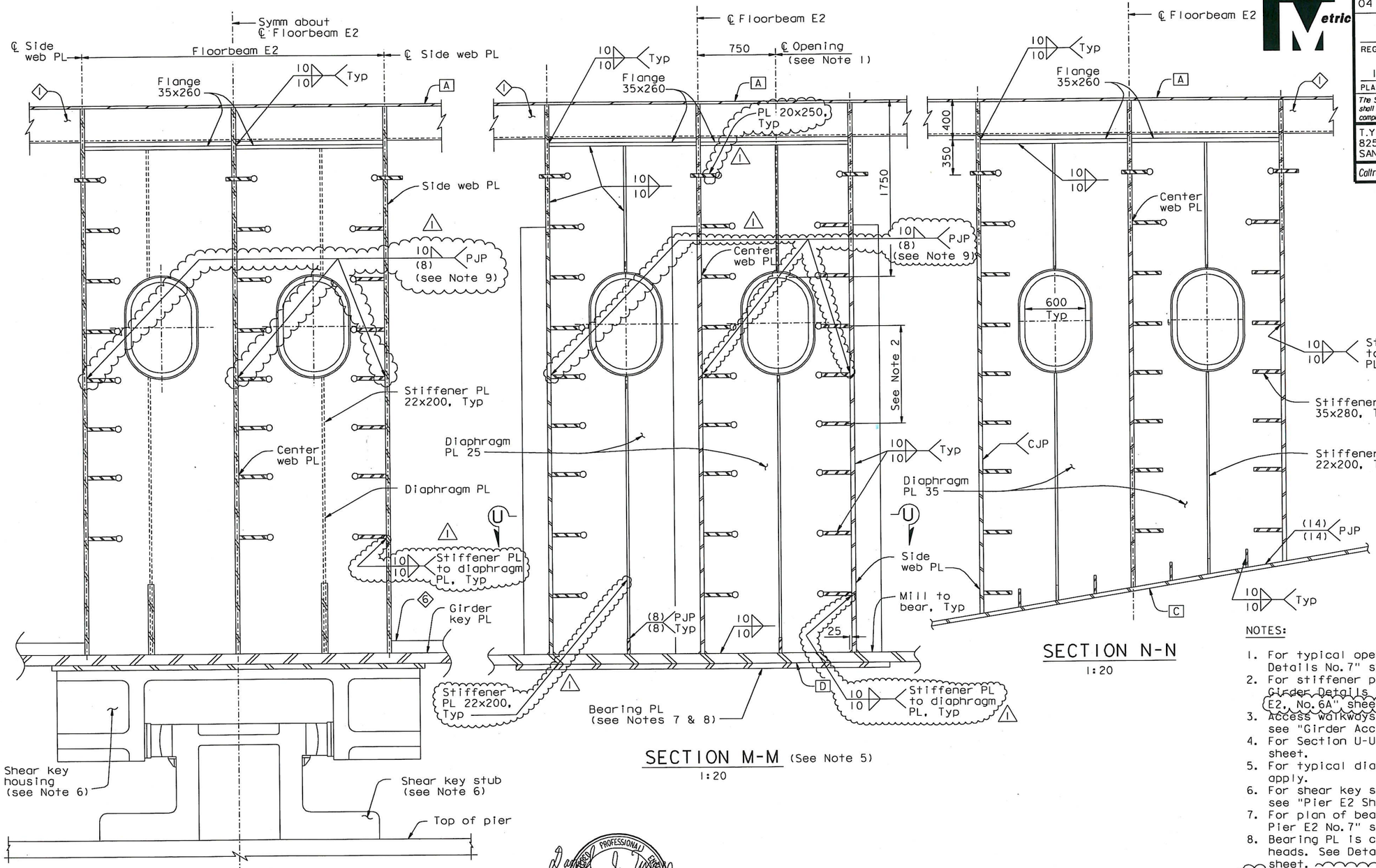

SECTION F-F
1:20

SECTION M-M (See Note 5)
1:20

SECTION N-N
1:20

NOTES:

1. For typical opening detail, see "Typical Girder Details No. 7" sheet.
2. For stiffener penetration details, see "Typical Girder Details No. 5" sheet and "Girder At Pier E2, No. 6A" sheet.
3. Access walkways not shown. For access details, see "Girder Access Details" sheets.
4. For Section U-U, see "Girder At Pier E2 No. 8" sheet.
5. For typical diaphragm details, Section M-M shall apply.
6. For shear key stub and shear key housing details, see "Pier E2 Shear Key Details" sheets.
7. For plan of bearing PL, see "Crossbeam at Pier E2 No. 7" sheet.
8. Bearing PL is counterbored to accomodate bolt heads. See Detail J on "Crossbeam At Pier E2 No. 3" sheet.
9. At web PL taper, provide (8) PJP weld in lieu of fillet weld.

CONTRACT CHANGE ORDER NO. 87
SHEET 31 OF 115

REQUESTS FOR INFORMATION NOT ADDRESSED IN THIS CCO REMAIN IN FORCE

REGISTERED PROFESSIONAL ENGINEER Daniel J. Turner No. C 65033 Exp. 06/30/13 CIVIL STATE OF CALIFORNIA

FOR REVISIONS ONLY

ALL DIMENSIONS ARE IN MILLIMETERS UNLESS OTHERWISE SHOWN

MARK	DATE	DESCRIPTIONS	BY	CH'D	CCO#
1	09/01/11	EAST END OBG	GB	DT	87

REVISIONS

R. Vallizadeh/V. Toan/Y.L./W.L./F.C.
DESIGN OVERSIGHT
SIGN OFF DATE 09/01/11

Rev. Date: 5-18-98

DESIGN	BY G. Baker	CHECKED	P. Ritchie
DETAILS	BY C. Mauch	CHECKED	T. McMeans
QUANTITIES	BY D. Turner	CHECKED	M. Roberts

ORIGINAL SCALE IN MILLIMETERS FOR REDUCED PLANS 0 10 20 30 40 50 60 70 80 90 100

PREPARED FOR THE STATE OF CALIFORNIA DEPARTMENT OF TRANSPORTATION

R. Manzanarez
PROJECT ENGINEER

CU 04
EA 0120F1

BRIDGE NO. 34-0006L/R
KILOMETER POST 13.2/13.9

SAN FRANCISCO OAKLAND BAY BRIDGE
EAST SPAN SEISMIC SAFETY PROJECT
SELF-ANCHORED SUSPENSION BRIDGE
(SUPERSTRUCTURE & TOWER)

GIRDER AT PIER E2 NO. 6

DISREGARD PRINTS BEARING EARLIER REVISION DATES → 05/15/99 09/08/99 05/31/01 09/06/02 07/01/02 12/13/02 10/13/05 11/13/05 12/01/05

SHEET 262R1 OF

100 % PS&E

USERNAME => ALI shonsk, DATE PLOTTED => 30 AUG 2011 TIME PLOTTED => 11:42:35

FILE => I:\bb\04-01200I\sas\contract plans and cco\cco\cco#87\I-original 09-01-11\dgn\aggdd12.dgn

DIST.	COUNTY	ROUTE	KILOMETER POST TOTAL PROJECT	SHEET NO.	TOTAL SHEETS
04	SF	80	13.2/13.9	679S1	1204

REGISTERED ENGINEER - CIVIL

04-18-12
PLANS APPROVAL DATE

REGISTERED PROFESSIONAL ENGINEER Marwan N. Nader No. C 054426 Exp. 12/31/13 CIVIL STATE OF CALIFORNIA

The State of California or its officers or agents shall not be responsible for the accuracy or completeness of electronic copies of this plan sheet.

T.Y. LIN / MOFFATT & NICHOL
825 BATTERY STREET
SAN FRANCISCO, CA 94111

Caltrans now has a web site! To get to the web site, go to: http://www.dot.ca.gov

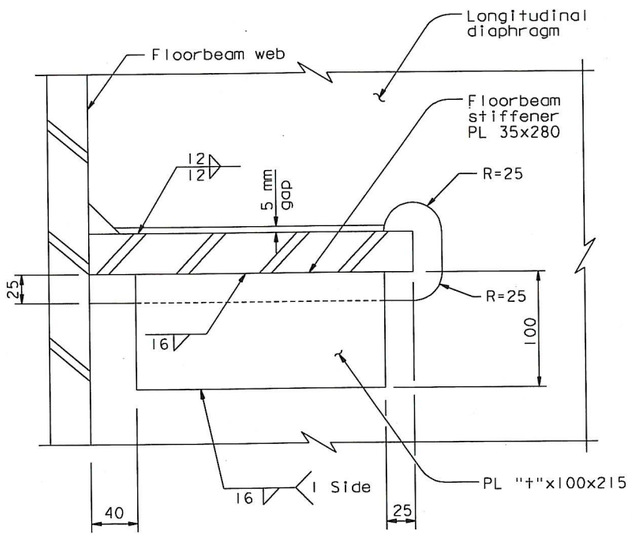

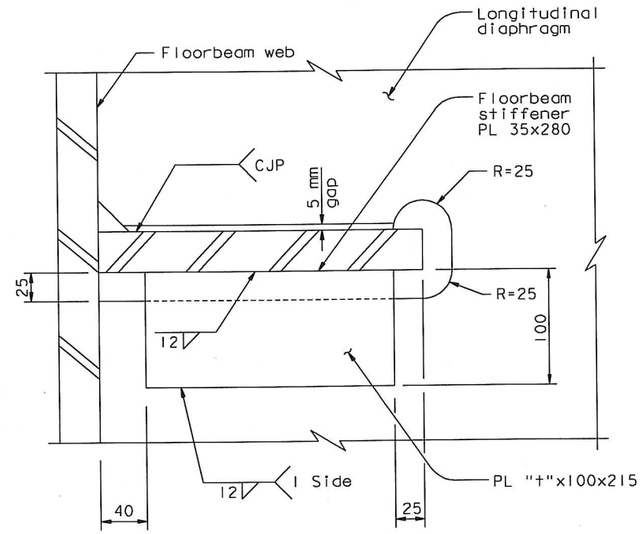

SINGLE FIT LUG OPTIONS (See Note 1)

PIER E2 LONGITUDINAL DIAPHRAGM CUT-OUTS

1:2.5

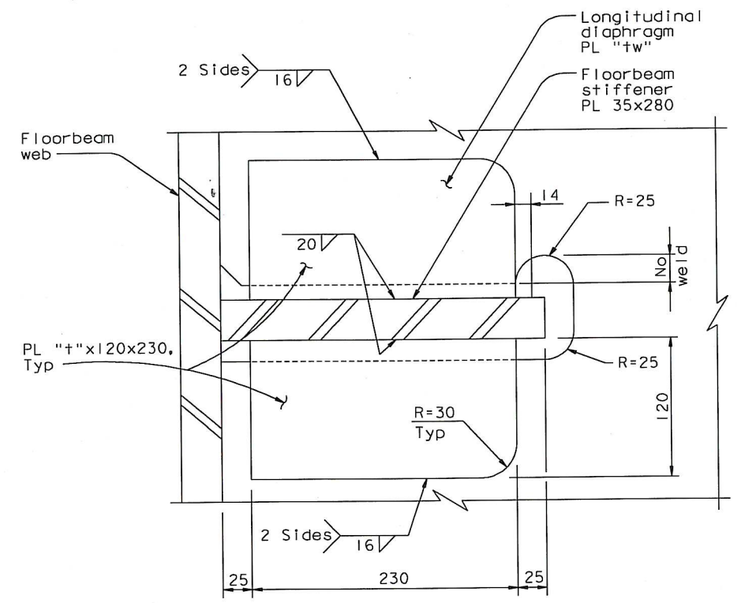

DOUBLE FIT LUG OPTION

1:2.5

NOTES:

1. Lug thickness "t" shall match the longitudinal diaphragm thickness.
2. For tw=20, t=22. For tw=25, t=25.

CONTRACT CHANGE ORDER NO. 87
SHEET 32 OF 115

REQUESTS FOR INFORMATION NOT ADDRESSED IN THIS CCO REMAIN IN FORCE

ALL DIMENSIONS ARE IN MILLIMETERS UNLESS OTHERWISE SHOWN

R. Valizadeh/V. Toan/Y.L./W.L./F.C.
DESIGN OVERSIGHT
SIGN OFF DATE 04/18/12

MARK	DATE	DESCRIPTIONS	BY	CH'D	CCO#
0	04/18/12	EAST END OBG	GB	MN	87

REVISIONS

	BY	CHECKED
DESIGN	G. Baker	M. Nader
DETAILS	G. Baker	D. Turner
QUANTITIES	G. Baker	D. Turner

PREPARED FOR THE STATE OF CALIFORNIA DEPARTMENT OF TRANSPORTATION

R. Manzanarez
PROJECT ENGINEER

BRIDGE NO. 34-0006L/R
KILOMETER POST 13.2/13.9

SAN FRANCISCO OAKLAND BAY BRIDGE
EAST SPAN SEISMIC SAFETY PROJECT
SELF-ANCHORED SUSPENSION BRIDGE
(SUPERSTRUCTURE & TOWER)

GIRDER AT PIER E2 NO. 6A

Rev. Date: 5-18-98

ORIGINAL SCALE IN MILLIMETERS FOR REDUCED PLANS 0 10 20 30 40 50 60 70 80 90 100

CU 04
EA 0120F1

DISREGARD PRINTS BEARING EARLIER REVISION DATES 04/18/12

REVISION DATES (PRELIMINARY STAGE ONLY)

SHEET 262S1 OF

FILE => I:\bb\04-01200I\sas\contract plans and cco\cco\cco*87\temp\aggdd12a.dgn

100 % PS&E

USERNAME => DWinrow DATE PLOTTED => 18 APR 2012 TIME PLOTTED => 11:09:17

DIST.	COUNTY	ROUTE	KILOMETER POST TOTAL PROJECT	SHEET NO.	TOTAL SHEETS
04	SF	80	13.2/13.9	680R1	1204

George Baker
REGISTERED ENGINEER - CIVIL
12-6-04
PLANS APPROVAL DATE

REGISTERED PROFESSIONAL ENGINEER George S. Baker No. C 57112 Exp. 12/31/05 CIVIL STATE OF CALIFORNIA

The State of California or its officers or agents shall not be responsible for the accuracy or completeness of electronic copies of this plan sheet.

T.Y. LIN / MOFFATT & NICHOL
825 BATTERY STREET
SAN FRANCISCO, CA 94111

Caltrans now has a web site! To get to the web site, go to: http://www.dot.ca.gov

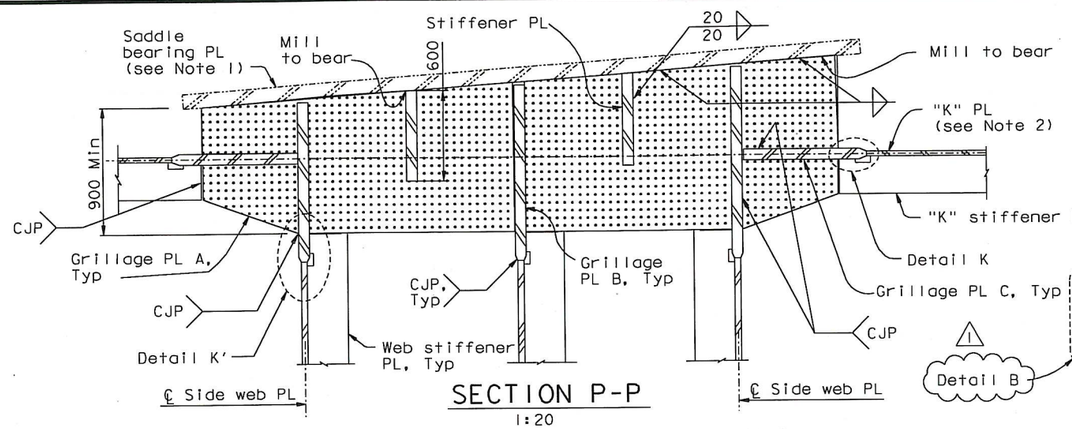

SECTION P-P
1:20

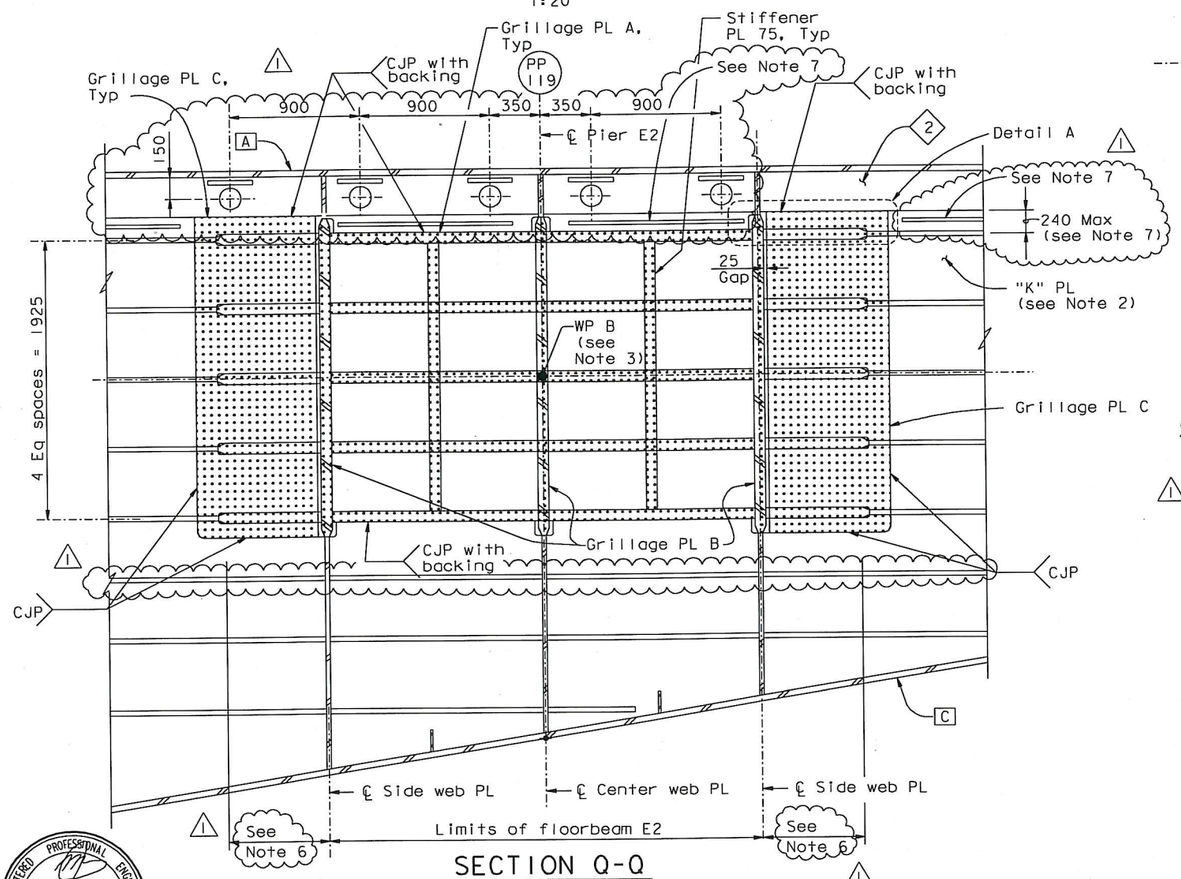

SECTION Q-Q
1:20

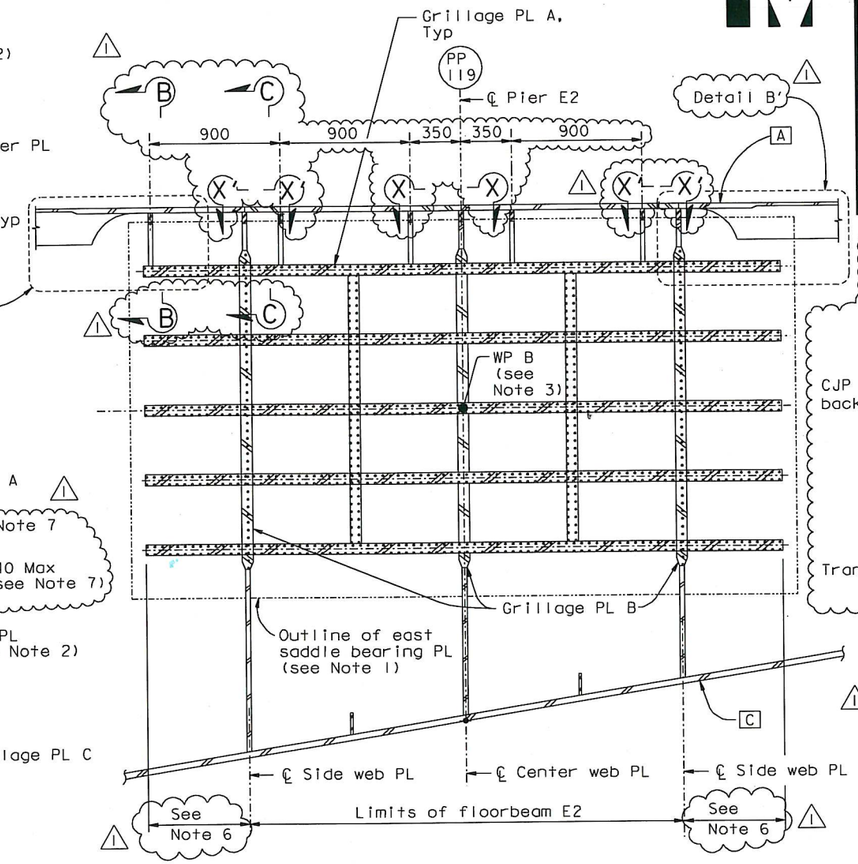

SECTION R-R
1:20

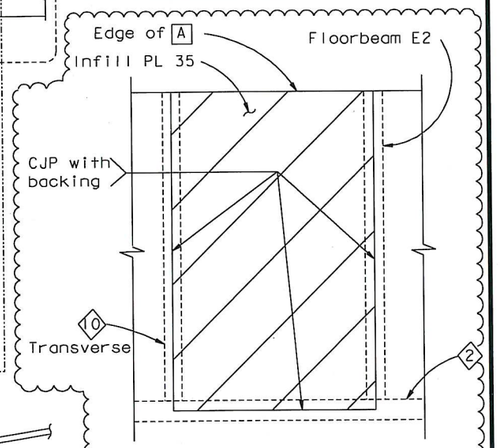

SECTION X-X SHOWN
SECTION X'-X' SIMILAR
1:5

LEGEND:

Saddle grillage

NOTES:

1. For east saddle bearing PL details, see "East Saddle Details" sheets.
2. For "K" PL details, see "Girder At East Transition Details No. 1" sheet.
3. For location of WPB, see "East Saddle Details" sheets.
4. All saddle grillage connections shall be welded using complete joint penetration welds unless noted otherwise.
5. For Details A and K, see "Girder At Pier E2 No. 8" sheet.
6. The dimensions of grillage plates A and C shall be determined from the east saddle layout geometry. See "East Saddle Details No. 1" through "East Saddle Details No. 3" sheets.
7. Stiffener shall be added as required to insure stiffening within 240 mm of the top of "K" PL.
8. For Detail B, see "Girder At Pier E2 No. 8A" sheet.
9. For Sections B-B and C-C, see "Girder At Pier E2 No. 8" sheet.

REGISTERED PROFESSIONAL ENGINEER Marwan N. Nader No. C 054426 Exp. 12/31/13 CIVIL STATE OF CALIFORNIA

FOR REVISIONS ONLY

CONTRACT CHANGE ORDER NO. 87
SHEET 33 OF 115

REQUESTS FOR INFORMATION NOT ADDRESSED IN THIS CCO REMAIN IN FORCE

ALL DIMENSIONS ARE IN MILLIMETERS UNLESS OTHERWISE SHOWN

MARK	DATE	DESCRIPTIONS	BY	CH'D	CCO#
1	04/18/12	EAST END OBG	GB	MN	87

REVISIONS

R. Valizadeh/V. Toan/Y.L./W.L./F.C.
DESIGN OVERSIGHT
SIGN OFF DATE 04/18/12

Rev. Date: 5-18-98

DESIGN	BY G. Baker	CHECKED	P. Ritchie
DETAILS	BY C. Mauch	CHECKED	T. McMeans
QUANTITIES	BY D. Turner	CHECKED	M. Roberts

PREPARED FOR THE STATE OF CALIFORNIA DEPARTMENT OF TRANSPORTATION

R. Manzanarez
PROJECT ENGINEER

BRIDGE NO. 34-0006L/R
KILOMETER POST 13.2/13.9

SAN FRANCISCO OAKLAND BAY BRIDGE
EAST SPAN SEISMIC SAFETY PROJECT
SELF-ANCHORED SUSPENSION BRIDGE
(SUPERSTRUCTURE & TOWER)

GIRDER AT PIER E2 NO. 7

ORIGINAL SCALE IN MILLIMETERS FOR REDUCED PLANS 0 10 20 30 40 50 60 70 80 90 100

CU 04
EA 0120F1

DISREGARD PRINTS BEARING EARLIER REVISION DATES

REVISION DATES (PRELIMINARY STAGE ONLY) 05/15/99 08/02/99 05/24/01 01/08/02 01/07/02 12/13/02 11/13/03

SHEET 263R1 OF

FILE => I:\bb\04-012001\sas\contract plans and cco\cco\cco#87\temp\aggddl1.dgn

USERNAME => DWinrow DATE PLOTTED => 18 APR 2012 TIME PLOTTED => 11:10:20

100% PS&E

DIST.	COUNTY	ROUTE	KILOMETER POST TOTAL PROJECT	SHEET NO.	TOTAL SHEETS
04	SF	80	13.2/13.9	681R1	1204

George Baker
REGISTERED ENGINEER - CIVIL
12/6/04
PLANS APPROVAL DATE

REGISTERED PROFESSIONAL ENGINEER George S. Baker No. C 57112 Exp. 12/31/05 CIVIL STATE OF CALIFORNIA

The State of California or its officers or agents shall not be responsible for the accuracy or completeness of electronic copies of this plan sheet.

T.Y. LIN / MOFFATT & NICHOL
825 BATTERY STREET
SAN FRANCISCO, CA 94111

Caltrans now has a web site! To get to the web site, go to: http://www.dot.ca.gov

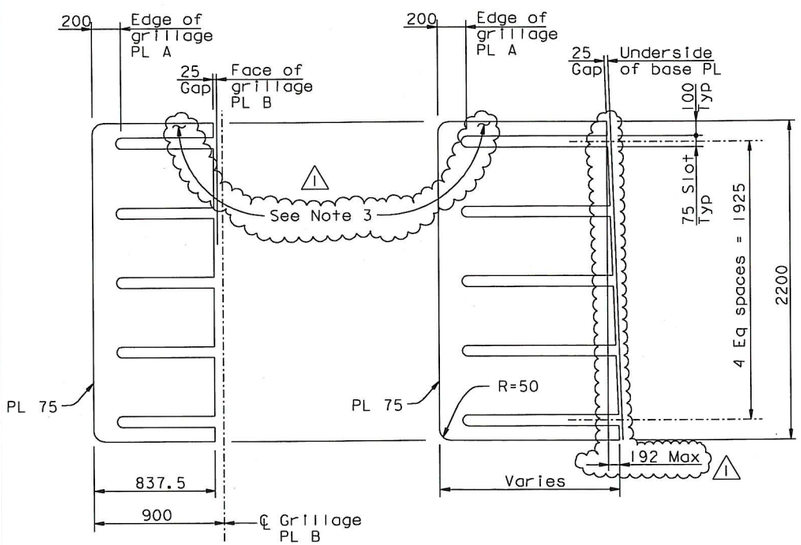

PLATE C

PLATE B

GRILLAGE PLATE DETAILS
1:20

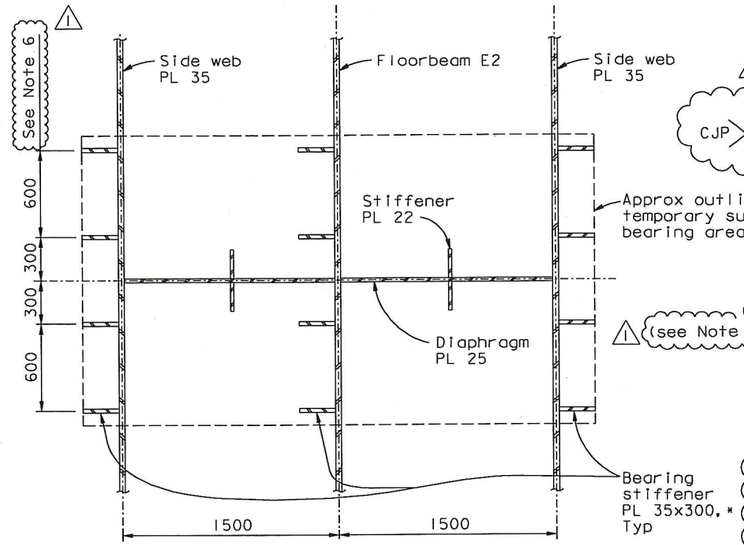

SECTION U-U (* For Bearing Replacement)
1:20

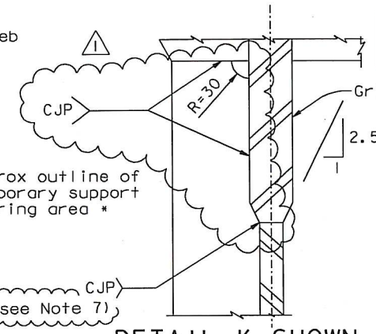

DETAIL K SHOWN, DETAIL K' SIMILAR
1:5

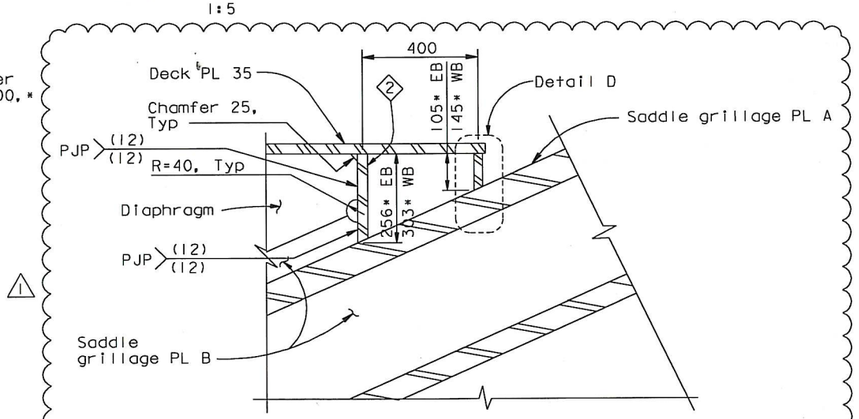

SECTION C-C (EB shown, WB Section C'-C' similar)
1:10

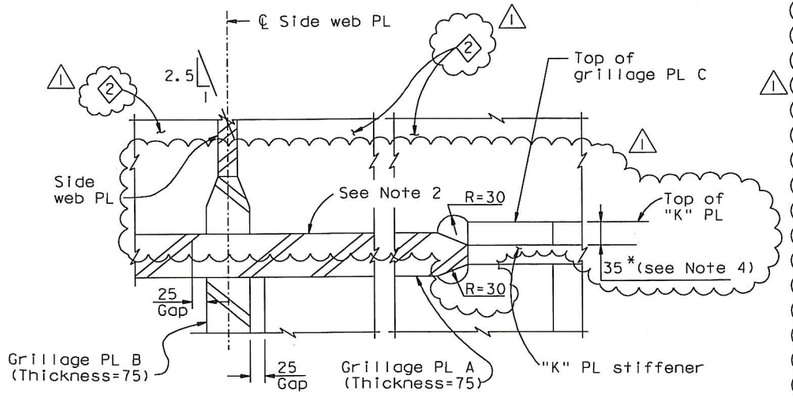

DETAIL A
1:5

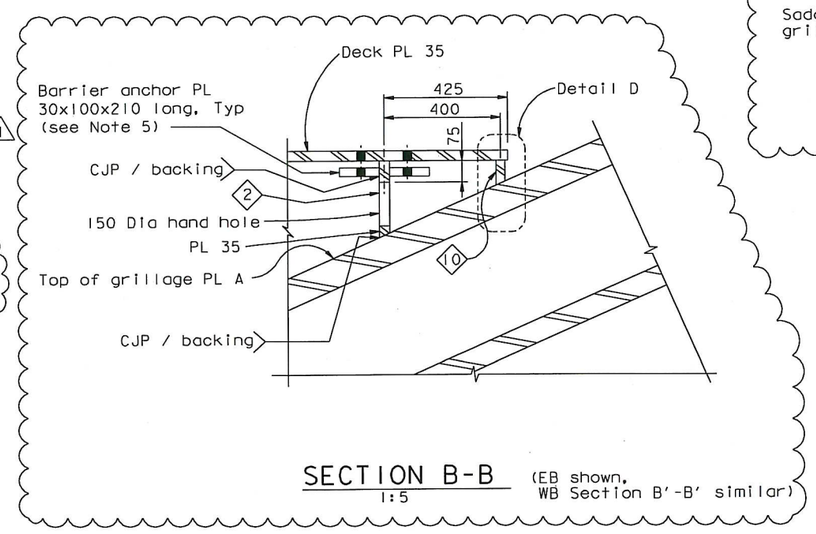

SECTION B-B (EB shown, WB Section B'-B' similar)
1:5

NOTES:

1. For typical stiffener termination, see "Typical Floorbeam Details No.6" sheet.
2. Extend or trim stiffener Type 2 to meet grillage PL A based on final cable geometry.
3. Trim grillage Plate B and C as shown on "Section C-C" and "Detail A" respectively.
4. Dimensions marked with an asterisk shall be revised based on the final cable geometry.
5. Barrier anchor shall be 310 long if detailing per "Alternative Barrier Connection Detail" on "Typical Girder Details No.14" sheet.
6. At the Contractor's option, stiffener may be offset +/- 5 mm, subject to review and approval of the Engineer.
7. At the Contractor's option, to accommodate updates in the fabrication procedure, a rathole (R=30) in the stiffener is acceptable to allow grillage PL B to Floorbeam web weld.

REGISTERED PROFESSIONAL ENGINEER Marwan N. Nader No. C 054426 Exp. 12/31/11 CIVIL STATE OF CALIFORNIA

FOR REVISIONS ONLY

CONTRACT CHANGE ORDER NO. 87
SHEET 34 OF 115

REQUESTS FOR INFORMATION NOT ADDRESSED IN THIS CCO REMAIN IN FORCE

ALL DIMENSIONS ARE IN MILLIMETERS UNLESS OTHERWISE SHOWN

R. Vallizadeh/V. Toan/Y.L./W.L./F.C.
DESIGN OVERSIGHT
SIGN OFF DATE 09/01/11

MARK	DATE	DESCRIPTIONS	BY	CH'D	CCO#
1	09/01/11	EAST END OBG	GB	MN	87

REVISIONS

DESIGN	BY G. Baker	CHECKED	P. Ritchie
DETAILS	BY C. Mauch	CHECKED	T. McMeans
QUANTITIES	BY D. Turner	CHECKED	M. Roberts

PREPARED FOR THE STATE OF CALIFORNIA DEPARTMENT OF TRANSPORTATION

R. Manzanarez
PROJECT ENGINEER

BRIDGE NO. 34-0006L/R
KILOMETER POST 13.2/13.9

SAN FRANCISCO OAKLAND BAY BRIDGE
EAST SPAN SEISMIC SAFETY PROJECT
SELF-ANCHORED SUSPENSION BRIDGE
(SUPERSTRUCTURE & TOWER)

GIRDER AT PIER E2 NO.8

Rev. Date: 5-18-98

ORIGINAL SCALE IN MILLIMETERS FOR REDUCED PLANS 0 10 20 30 40 50 60 70 80 90 100

CU 04
EA 0120F1

DISREGARD PRINTS BEARING EARLIER REVISION DATES

REVISION DATES (PRELIMINARY STAGE ONLY) 05/25/99 06/22/99 05/31/01 01/08/02 01/31/02 12/19/02 11/13/05

SHEET 264R1 OF

FILE => I:\bb\04-0120F1\sas\contract plans and cco\cco\cco#87\1-original 09-01-11\dgn\aggdd13.dgn

USERNAME => ALishonsk DATE PLOTTED => 30 AUG 2011 TIME PLOTTED =>

100 % PS&E

DIST.	COUNTY	ROUTE	KILOMETER POST TOTAL PROJECT	SHEET NO.	TOTAL SHEETS
04	SF	80	13.2/13.9	681S1	1204

REGISTERED ENGINEER - CIVIL

09-01-11

PLANS APPROVAL DATE

REGISTERED PROFESSIONAL ENGINEER Marwan N. Nader No. C 054426 Exp. 12/31/11 CIVIL STATE OF CALIFORNIA

The State of California or its officers or agents shall not be responsible for the accuracy or completeness of electronic copies of this plan sheet.

T.Y. LIN / MOFFATT & NICHOL
825 BATTERY STREET
SAN FRANCISCO, CA 94111

Caltrans now has a web site! To get to the web site, go to: http://www.dot.ca.gov

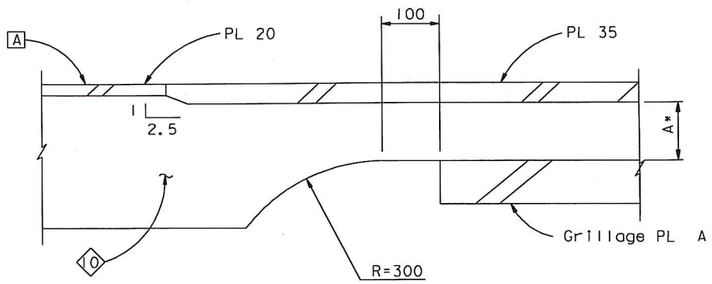

ALTERNATIVE 1 A* > 40

DETAIL B (Detail B' similar)
1:5

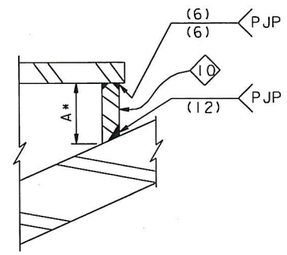

FOR A* ≥ 40

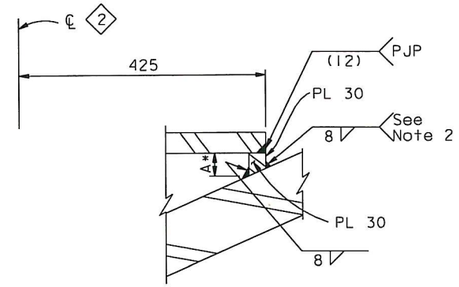

FOR 15 ≤ A* ≤ 40

DETAIL D (Eastbound)
1:5

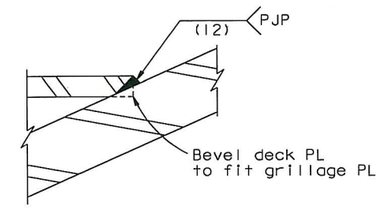

FOR A* < 15

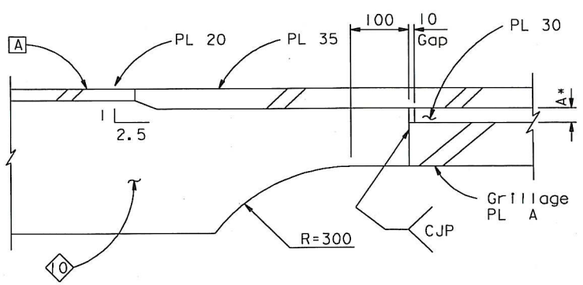

ALTERNATIVE 2 A* < 40

DETAIL B (Detail B' similar)
1:5

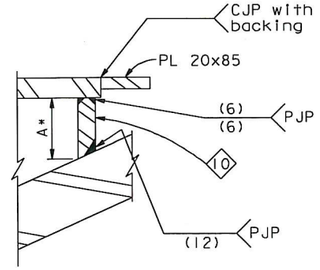

FOR A* ≥ 60

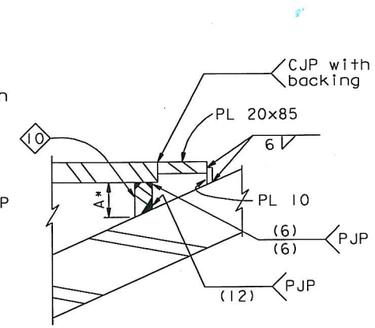

FOR 60 > A* ≥ 35

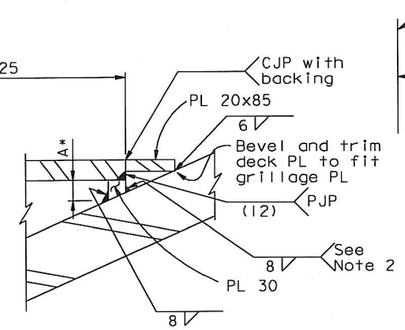

FOR 10 ≤ A* ≤ 35

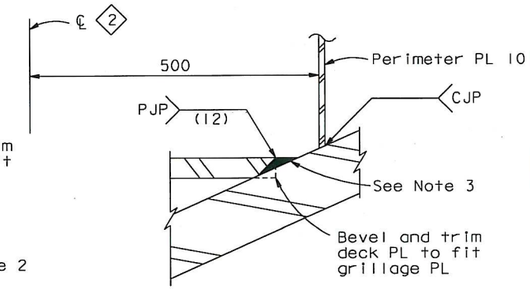

FOR A* < 10

DETAIL D' (Westbound)
1:5

NOTES:

1. Dimensions marked with an asterisk shall be revised based on the final cable geometry.
2. For A* < 20, the 8 mm fillet shall be applied as reinforcement to the (12) PJP.
3. Fill with weld and grind flush with top of deck.

CONTRACT CHANGE ORDER NO. 87
SHEET 35 OF 115

REQUESTS FOR INFORMATION NOT ADDRESSED IN THIS CCO REMAIN IN FORCE

ALL DIMENSIONS ARE IN MILLIMETERS UNLESS OTHERWISE SHOWN

R. Valizadeh/V. Toan/Y.L./W.L./F.C.
DESIGN OVERSIGHT
SIGN OFF DATE 09/01/11

MARK	DATE	DESCRIPTIONS	BY	CH'D	CCO#
0	09/01/11	EAST END OBG	GB	MN	87

REVISIONS

DESIGN	BY D. Turner	CHECKED G. Baker		
DETAILS	BY D. Turner	CHECKED G. Baker		
QUANTITIES	BY D. Turner	CHECKED G. Baker		

PREPARED FOR THE STATE OF CALIFORNIA DEPARTMENT OF TRANSPORTATION

R. Manzanarez
PROJECT ENGINEER

BRIDGE NO. 34-0006L/R
KILOMETER POST 13.2/13.9

SAN FRANCISCO OAKLAND BAY BRIDGE
EAST SPAN SEISMIC SAFETY PROJECT
SELF-ANCHORED SUSPENSION BRIDGE
(SUPERSTRUCTURE & TOWER)

GIRDER AT PIER E2 NO. 8A

Rev. Date: 5-18-98

ORIGINAL SCALE IN MILLIMETERS FOR REDUCED PLANS 0 10 20 30 40 50 60 70 80 90 100

CU 04
EA 0120F1

DISREGARD PRINTS BEARING EARLIER REVISION DATES 09/01/11

REVISION DATES (PRELIMINARY STAGE ONLY)

SHEET 264S1 OF

FILE => I:\bb\04-012001\sas\contract plans and cco\cco\cco#87\1-original 09-01-11\dgn\aggdd13a.dgn

100 % PS&E

USERNAME => AlishanskiDATE PLOTTED => 30 AUG 2011 TIME PLOTTED =>

DIST.	COUNTY	ROUTE	KILOMETER POST TOTAL PROJECT	SHEET NO.	TOTAL SHEETS
04	SF	80	13.2/13.9	682R2	1204

George Baker
REGISTERED ENGINEER - CIVIL

12-6-04
PLANS APPROVAL DATE

REGISTERED PROFESSIONAL ENGINEER George S. Baker No. C57112 Exp. 12/31/05 CIVIL STATE OF CALIFORNIA

The State of California or its officers or agents shall not be responsible for the accuracy or completeness of electronic copies of this plan sheet.

T.Y. LIN / MOFFATT & NICHOL
825 BATTERY STREET
SAN FRANCISCO, CA 94111

Caltrans now has a web site! To get to the web site, go to: http://www.dot.ca.gov

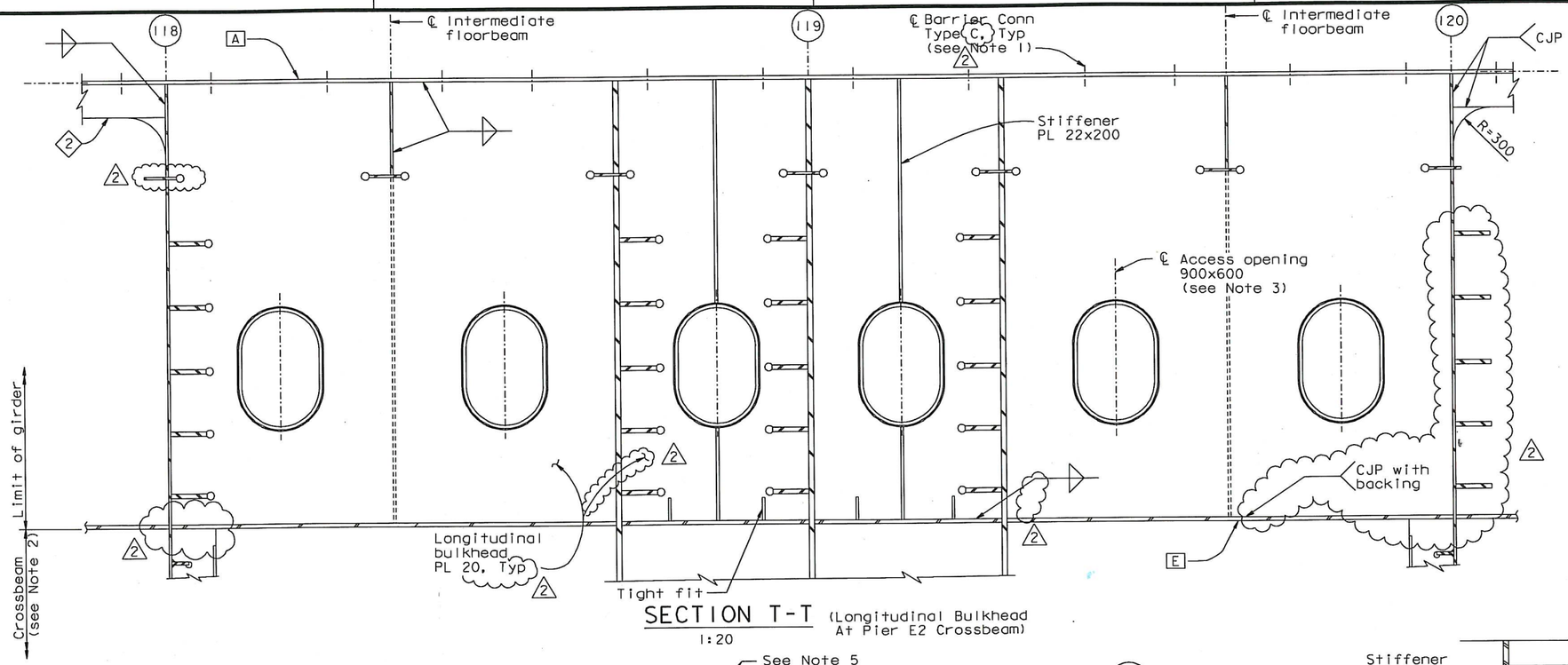

SECTION T-T
(Longitudinal Bulkhead At Pier E2 Crossbeam)
1:20

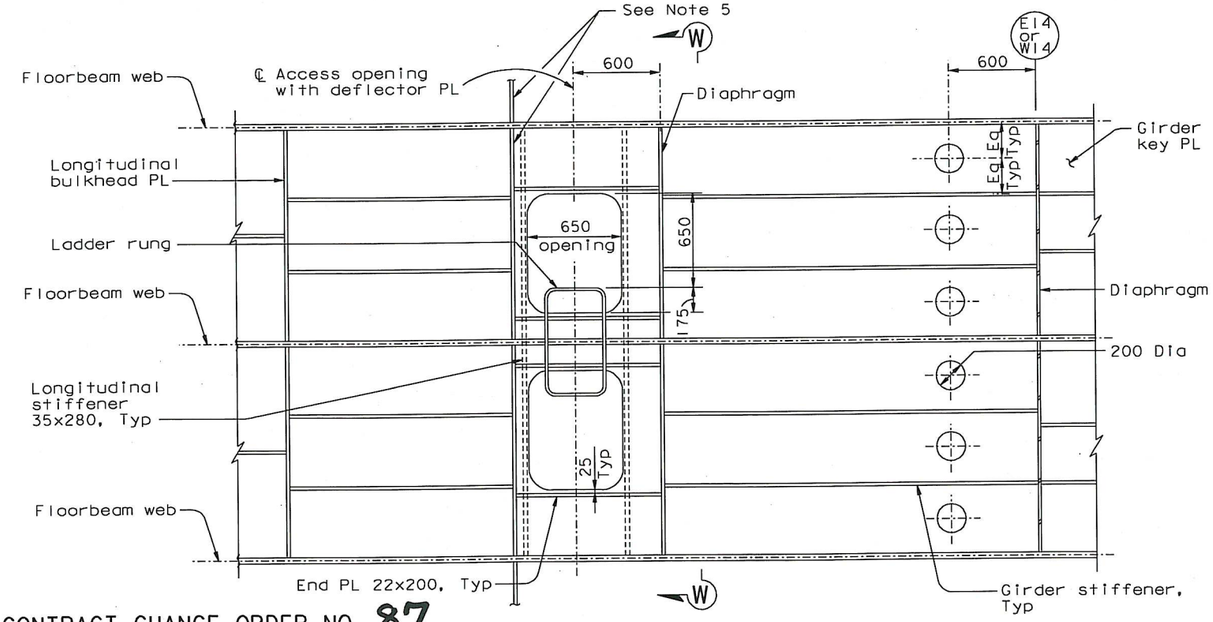

SECTION V-V
1:20

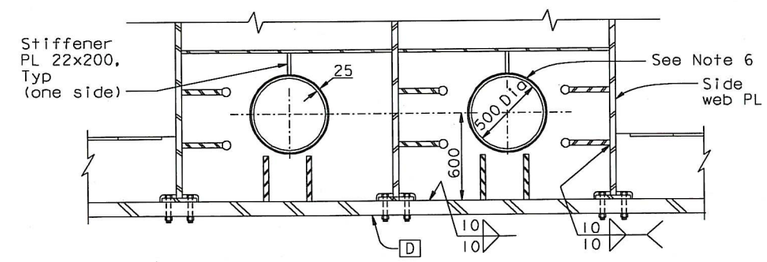

SECTION W-W
1:20

NOTES:

2

1. For details and connection spacing, see "Typical Girder Details No. 12" and "Typical Girder Details No. 14" sheets.
2. For details, see "Crossbeam At Pier E2" sheets.
3. For opening details, see "Typical Girder Details No. 7" sheet.
4. For Section V-V opening details, see "Typical Girder Details No. 15" sheet.
5. Access opening stiffener shall align with the longitudinal stiffener.
6. For opening details not shown, see "Typical Girder Details No. 7" sheet.

REGISTERED PROFESSIONAL ENGINEER Marwan N. Nader No. C 054426 Exp. 12/31/13 CIVIL STATE OF CALIFORNIA

FOR REVISIONS ONLY

CONTRACT CHANGE ORDER NO. 87
SHEET 36 OF 115

REQUESTS FOR INFORMATION NOT ADDRESSED IN THIS CCO REMAIN IN FORCE

ALL DIMENSIONS ARE IN MILLIMETERS, UNLESS OTHERWISE SHOWN

MARK	DATE	DESCRIPTIONS	BY	CH'D	CCO#
2	04/18/12	EAST END OBG	GB	MN	87
1	11/05/10	PP119 ACCESS & PP125 PLATES	GB	DT	86

REVISIONS

R. Valizadeh/V. Toan/Y.L./W.L./F.C.
DESIGN OVERSIGHT
Roya Valizadeh / Vong Toan / Y Liu
SIGN OFF DATE 04/18/12

Rev. Date: 5-18-98

DESIGN	BY G. Baker	CHECKED P. Ritchie	
DETAILS	BY C. Mauch	CHECKED T. McMeans	
QUANTITIES	BY D. Turner	CHECKED M. Roberts	

PREPARED FOR THE STATE OF CALIFORNIA DEPARTMENT OF TRANSPORTATION

R. Manzanarez
PROJECT ENGINEER

CU 04
EA 0120F1

BRIDGE NO. 34-0006L/R
KILOMETER POST 13.2/13.9

SAN FRANCISCO OAKLAND BAY BRIDGE
EAST SPAN SEISMIC SAFETY PROJECT
SELF-ANCHORED SUSPENSION BRIDGE
(SUPERSTRUCTURE & TOWER)

GIRDER AT PIER E2 NO. 9

ORIGINAL SCALE IN MILLIMETERS FOR REDUCED PLANS 0 10 20 30 40 50 60 70 80 90 100

DISREGARD PRINTS BEARING EARLIER REVISION DATES → 05/15/98 08/28/99 05/21/01 01/08/02 07/01/02 12/19/02 11/13/05 12/07/05

REVISION DATES (PRELIMINARY STAGE ONLY)

SHEET 265R2 OF

FILE => I:\bb\04-012001\sas\contract plans and cco\cco\cco#87\temp\aggdd14.dgn

100 % PS&E

USERNAME => DWinrow DATE PLOTTED => 18 APR 2012 TIME PLOTTED => 11:11:13

Caltrans now has a web site! To get to the web site, go to: http://www.dot.ca.gov

Caltrans Metric

DIST.	COUNTY	ROUTE	KILOMETER POST TOTAL PROJECT	SHEET NO.	TOTAL SHEETS
04	SF	80	13.2/13.9	683R1	1204

George Baker
REGISTERED ENGINEER - CIVIL
12-6-04
PLANS APPROVAL DATE

REGISTERED PROFESSIONAL ENGINEER George S. Baker No. C 57112 Exp. 12/31/05 CIVIL STATE OF CALIFORNIA

The State of California or its officers or agents shall not be responsible for the accuracy or completeness of electronic copies of this plan sheet.

T.Y. LIN / MOFFATT & NICHOL
825 BATTERY STREET
SAN FRANCISCO, CA 94111

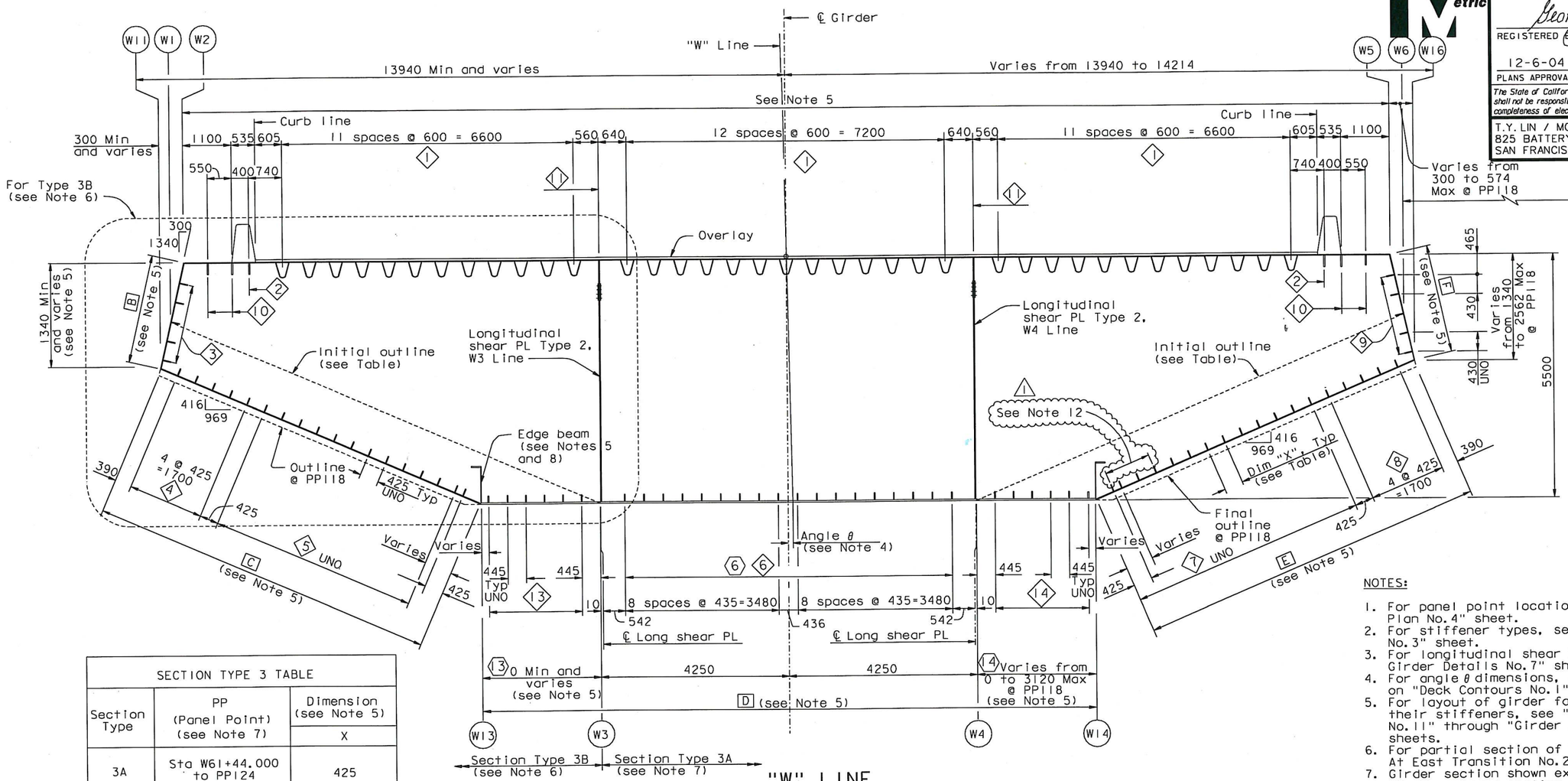

"W" LINE

SECTION TYPE 3 (East Transition)

1:50

SECTION TYPE 3 TABLE		
Section Type	PP (Panel Point) (see Note 7)	Dimension (see Note 5) X
3A	Sta W61+44.000 to PP124	425
3B	PP118 to PP119	425
3B	PP119 to PP124	425

LEGEND:

- [A] — Girder face designation A
- ◇4 — Girder stiffener Type 4
- ⬡14 — Girder PL Type 14

NOTES:

1. For panel point locations, see "Girder Framing Plan No. 4" sheet.
2. For stiffener types, see "Typical Girder Details No. 3" sheet.
3. For longitudinal shear PL details, see "Typical Girder Details No. 7" sheet.
4. For angle θ dimensions, see superelevation diagram on "Deck Contours No. 1" sheet.
5. For layout of girder faces A, B, C, D, E & F and their stiffeners, see "Girder At East Transition No. 11" through "Girder At East Transition No. 14" sheets.
6. For partial section of Type 3B girder, see "Girder At East Transition No. 2" sheet.
7. Girder section shown excludes girder at floorbeam E2. For girder section at floorbeam E2, see "Girder At Pier E2" sheets.
8. Edge beam shall have same dimensions and details as longitudinal shear PL Type 1. For details, see "Typical Girder Details No. 8" and "Typical Floorbeam Details No. 5" sheets.
9. For "Girder At East Transition" sheets, all bolts shall be detailed according to the Bolt Dimension Table. See "Typical Girder Details No. 1" sheet. All bolts are HS UNO.
10. For "Girder At East Transition" sheets UNO, all fillet welds shall be 6 mm for plate sizes not greater than 20 mm. For plate sizes greater than 20 mm, fillet welds shall be 8 mm UNO.
11. For layout of working points in east transition, see "Girder At East Transition No. 9" and "Girder At East Transition No. 10" sheets.
12. At the Contractor's option, three equal spaces no greater than 425 may be provided between PP119.3 and PP127. Stiffener lines shall be continuous.

REGISTERED PROFESSIONAL ENGINEER Daniel J. Turner No. C 65033 Exp. 06/30/13 CIVIL STATE OF CALIFORNIA

FOR REVISIONS ONLY

CONTRACT CHANGE ORDER NO. 87
SHEET 37 OF 115

REQUESTS FOR INFORMATION NOT ADDRESSED IN THIS CCO REMAIN IN FORCE

ALL DIMENSIONS ARE IN MILLIMETERS UNLESS OTHERWISE SHOWN

R. Valizadeh/V. Toan/Y.L./W.L./F.C.
DESIGN OVERSIGHT
SIGN OFF DATE 09/01/11

MARK	DATE	DESCRIPTIONS	BY	CH'D	CCO#
1	09/01/11	EAST END OBG	GB	DT	87

REVISIONS

Rev. Date: 5-18-98

	BY	CHECKED
DESIGN	G. Baker	P. Ritchie
DETAILS	M. Gulyas	T. McMeans
QUANTITIES	G. Baker	M. Roberts

PREPARED FOR THE STATE OF CALIFORNIA DEPARTMENT OF TRANSPORTATION

R. Manzanarez
PROJECT ENGINEER

BRIDGE NO. 34-0006L/R
KILOMETER POST 13.2/13.9

SAN FRANCISCO OAKLAND BAY BRIDGE
EAST SPAN SEISMIC SAFETY PROJECT
SELF-ANCHORED SUSPENSION BRIDGE
(SUPERSTRUCTURE & TOWER)

GIRDER AT EAST TRANSITION NO. 1

ORIGINAL SCALE IN MILLIMETERS FOR REDUCED PLANS 0 10 20 30 40 50 60 70 80 90 100

CU 04
EA 0120F1

DISREGARD PRINTS BEARING EARLIER REVISION DATES

REVISION DATES (PRELIMINARY STAGE ONLY): 01/09/99 05/18/99 08/02/99 05/31/01 09/06/02 01/07/02 12/19/02

SHEET 266R1 OF

FILE => I:\bb\04-012001\sas\contract plans and cco\cco\cco#87\1-original 09-01-11\dgn\agegd01.dgn

100 % PS&E

USERNAME => ALI shansk; DATE PLOTTED => 30 AUG 2011 TIME PLOTTED => 10:03:01

DIST.	COUNTY	ROUTE	KILOMETER POST TOTAL PROJECT	SHEET NO.	TOTAL SHEETS
04	SF	80	13.2/13.9	685R1	1204

George Baker
REGISTERED ENGINEER - CIVIL
12-6-04
PLANS APPROVAL DATE

REGISTERED PROFESSIONAL ENGINEER George S. Baker No. C 57112 Exp. 12/31/05 CIVIL STATE OF CALIFORNIA

The State of California or its officers or agents shall not be responsible for the accuracy or completeness of electronic copies of this plan sheet.

T.Y. LIN / MOFFATT & NICHOL
825 BATTERY STREET
SAN FRANCISCO, CA 94111

Caltrans now has a web site! To get to the web site, go to: http://www.dot.ca.gov

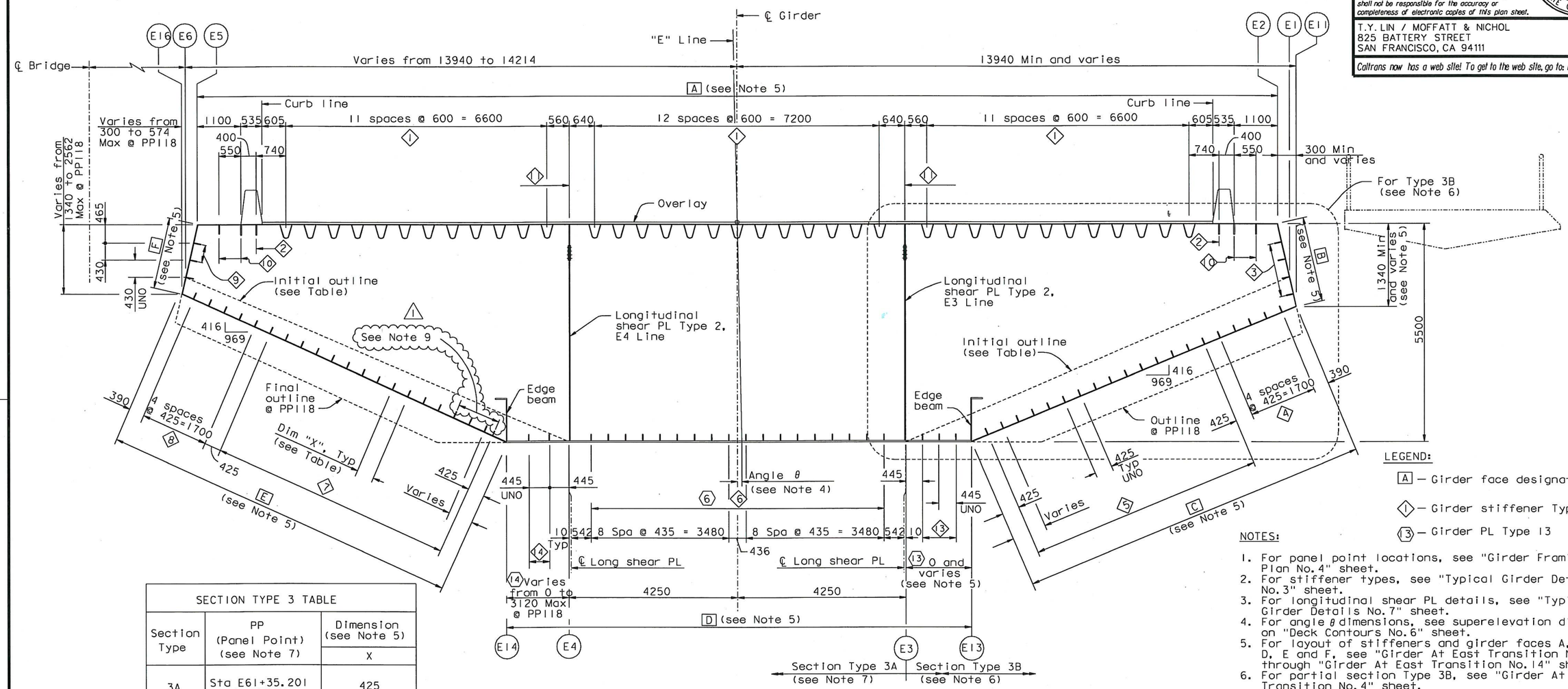

"E" LINE

SECTION TYPE 3 (East Transition)

1:50

SECTION TYPE 3 TABLE		
Section Type	PP (Panel Point) (see Note 7)	Dimension (see Note 5) X
3A	Sta E61+35.201 to PP124	425
3B	118 To 119	425
3B	119 To 124	425

LEGEND:

A — Girder face designation A

1 — Girder stiffener Type 1

13 — Girder PL Type 13

NOTES:

1. For panel point locations, see "Girder Framing Plan No. 4" sheet.
2. For stiffener types, see "Typical Girder Details No. 3" sheet.
3. For longitudinal shear PL details, see "Typical Girder Details No. 7" sheet.
4. For angle θ dimensions, see superelevation diagram on "Deck Contours No. 6" sheet.
5. For layout of stiffeners and girder faces A, B, C, D, E and F, see "Girder At East Transition No. 11" through "Girder At East Transition No. 14" sheets.
6. For partial section Type 3B, see "Girder At East Transition No. 4" sheet.
7. Girder section shown excludes girder at floorbeam E2. For girder section at floorbeam E2, see "Girder At Pier E2" sheets.
8. For layout of working points in east transition, see "Girder At East Transition No. 9 and "Girder At East Transition No. 10" sheets.
9. At the Contractor's option, three equal spaces no greater than 425 may be provided between PP119.3 and PP127. Stiffener lines shall be continuous.

Daniel J. Turner
REGISTERED PROFESSIONAL ENGINEER Daniel J. Turner No. C 65033 Exp. 06/30/13 CIVIL STATE OF CALIFORNIA

FOR REVISIONS ONLY

CONTRACT CHANGE ORDER NO. 87
SHEET 38 OF 115

REQUESTS FOR INFORMATION NOT ADDRESSED IN THIS CCO REMAIN IN FIRST CCO

ALL DIMENSIONS ARE IN MILLIMETERS UNLESS OTHERWISE SHOWN

100 % PS&E

SAN FRANCISCO OAKLAND BAY BRIDGE
EAST SPAN SEISMIC SAFETY PROJECT
SELF-ANCHORED SUSPENSION BRIDGE
(SUPERSTRUCTURE & TOWER)

GIRDER AT EAST TRANSITION NO. 3

R. Valizadeh/V. Toan/Y.L./W.L./F.C.
DESIGN OVERSIGHT
SIGN OFF DATE 09/01/11

MARK	DATE	DESCRIPTIONS	BY	CH'D	CCO#
1	09/01/11	EAST END OBG	GB	DT	87

REVISIONS

	BY	CHECKED
DESIGN	G. Baker	P. Ritchie
DETAILS	M. Gulyas	T. McMeans
QUANTITIES	G. Baker	M. Roberts

PREPARED FOR THE STATE OF CALIFORNIA DEPARTMENT OF TRANSPORTATION

R. Manzanarez
PROJECT ENGINEER

BRIDGE NO. 34-0006L/R
KILOMETER POST 13.2/13.9

CU 04
EA 0120F1

Rev. Date: 5-18-98

ORIGINAL SCALE IN MILLIMETERS FOR REDUCED PLANS 0 10 20 30 40 50 60 70 80 90 100

DISREGARD PRINTS BEARING EARLIER REVISION DATES

REVISION DATES (PRELIMINARY STAGE ONLY) 01/05/99 05/13/99 08/06/99 05/21/01 04/08/02 07/24/02 12/19/02

SHEET 268R1 OF

FILE => I:\bb\04-0120F1\sas\contract plans and cco\cco\cco#87\1-original 09-01-11\dgn\agegd03.dgn

USERNAME => ALTshansk DATE PLOTTED => 30 AUG 2013 TIME PLOTTED => 12:01

DIST.	COUNTY	ROUTE	KILOMETER POST TOTAL PROJECT	SHEET NO.	TOTAL SHEETS
04	SF	80	13.2/13.9	686R1	1204

George Baker
REGISTERED ENGINEER - CIVIL
12-6-04
PLANS APPROVAL DATE

REGISTERED PROFESSIONAL ENGINEER George S. Baker No. C 57112 Exp. 12/31/05 CIVIL STATE OF CALIFORNIA

The State of California or its officers or agents shall not be responsible for the accuracy or completeness of electronic copies of this plan sheet.

T.Y. LIN / MOFFATT & NICHOL
825 BATTERY STREET
SAN FRANCISCO, CA 94111

Caltrans now has a web site! To get to the web site, go to: http://www.dot.ca.gov

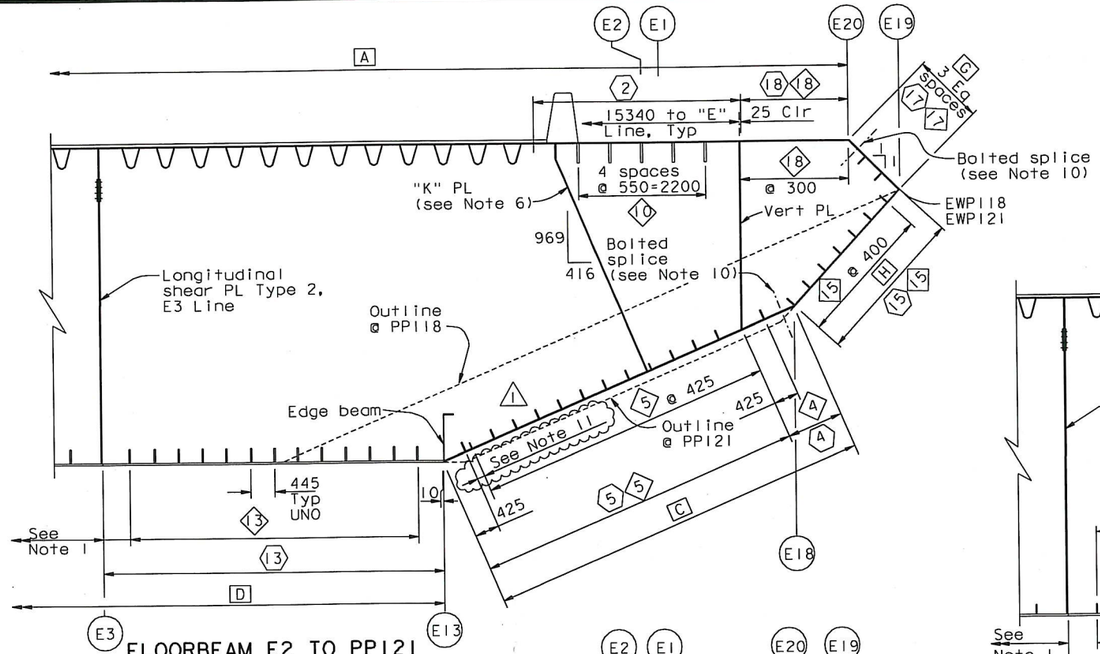

FLOORBEAM E2 TO PP121
(See Note 7)

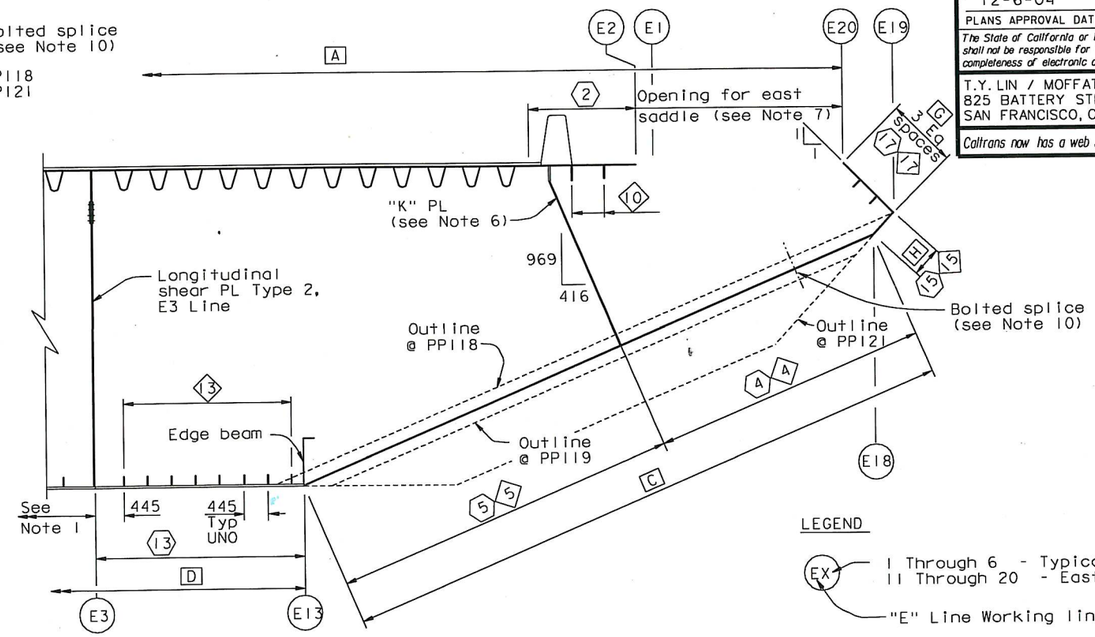

PP118 TO FLOORBEAM E2
(See Note 7)

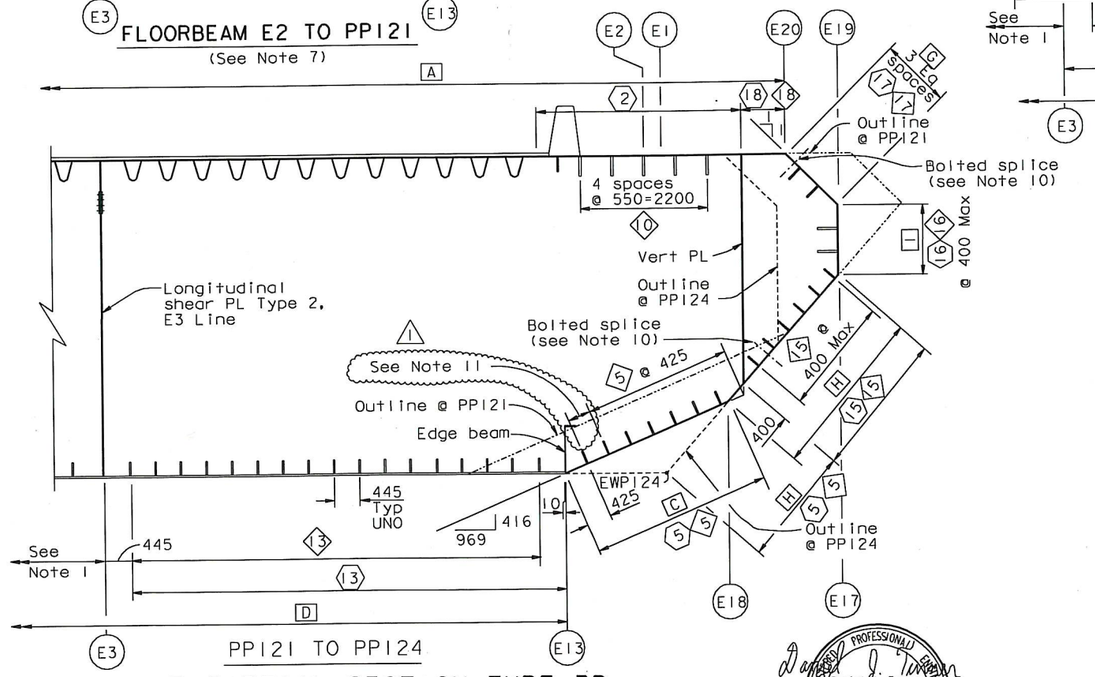

PP121 TO PP124

"E" LINE-PARTIAL SECTION TYPE 3B (East Transition)
1:50

CONTRACT CHANGE ORDER NO. 87
SHEET 39 OF 115

REQUESTS FOR INFORMATION NOT ADDRESSED IN THIS CCO REMAIN IN FORCE

REGISTERED PROFESSIONAL ENGINEER Daniel J. Turner No. C 65033 Exp. 06/30/13 CIVIL STATE OF CALIFORNIA

FOR REVISIONS ONLY

LEGEND

- EX — 1 Through 6 - Typical, constant; 11 Through 20 - East Transition, varies
- "E" Line Working line
- EWP - "E" Line Working point
- A - Girder face designation A
- 1 - Girder stiffener Type 1
- 13 - Girder PL Type 13

NOTES:

1. For section and details not shown, see "Girder At East Transition No. 3" and "Floorbeam At East Transition" sheets.
2. For stiffener types, see "Typical Girder Details No. 3" sheet.
3. For longitudinal shear PL details, see "Typical Girder Details No. 7" sheet.
4. For girder geometry, see "Girder At East Transition No. 9" sheet.
5. For layout of girder faces A, C, D, G, H and I and their stiffeners, see "Girder At East Transition No. 11" through "Girder At East Transition No. 14" sheets.
6. For "K" PL details, see "Girder At East Transition Details No. 1" sheet.
7. Saddle not shown for clarity. Girder section shown excludes girder at floorbeam E2. For girder section at floorbeam E2, see "Girder At Pier E2" sheets.
8. For details not shown, see "Girder At East Transition No. 2" sheet.
9. For layout of working points in east transition, see "Girder At East Transition No. 9" and "Girder At East Transition No. 10" sheets.
10. Girder faces G, H and I are architectural from PP118 to PP125. For bolted splices, see "Girder At East Transition Details No. 3" sheet. For splice locations, see "Girder At East Transition Nos. 11 to 14" sheets.
11. At the Contractor's option, shorter spacing may be relocated to another location on PL C, subject to review and approval of the Engineer.

ALL DIMENSIONS ARE IN MILLIMETERS UNLESS OTHERWISE SHOWN

100 % PS&E

SAN FRANCISCO OAKLAND BAY BRIDGE
EAST SPAN SEISMIC SAFETY PROJECT
SELF-ANCHORED SUSPENSION BRIDGE
(SUPERSTRUCTURE & TOWER)

GIRDER AT EAST TRANSITION NO. 4

MARK	DATE	DESCRIPTIONS	BY	CH'D	CCO#
1	09/01/11	EAST END OBG	GB	DT	87

REVISIONS

R. Valizadeh/V. Toan/Y.L./W.L./F.C.
DESIGN OVERSIGHT
Roya Valizadeh / Vong Toan / Y Liu
SIGN OFF DATE 09/01/11

Rev. Date: 5-18-98

	BY	CHECKED
DESIGN	G. Baker	P. Ritchie
DETAILS	M. Gulyas	T. McMeans
QUANTITIES	G. Baker	M. Roberts

PREPARED FOR THE STATE OF CALIFORNIA DEPARTMENT OF TRANSPORTATION

R. Manzanarez
PROJECT ENGINEER

BRIDGE NO. 34-0006L/R
KILOMETER POST 13.2/13.9

CU 04
EA 0120F1

DISREGARD PRINTS BEARING EARLIER REVISION DATES

REVISION DATES (PRELIMINARY STAGE ONLY): 01/23/95 05/15/95 08/02/95 05/24/01 09/06/02 01/06/03 12/19/02

SHEET 269R1

ORIGINAL SCALE IN MILLIMETERS FOR REDUCED PLANS 0 10 20 30 40 50 60 70 80 90 100

FILE => I:\bb\04-012001\sas\contract plans and cco\cco\cco#87\1-original 09-01-11\dgn\agegd04.dgn

USERNAME => ALIshansk DATE PLOTTED => 30 AUG 2011 TIME PLOTTED => 10:13:15

Caltrans now has a web site! To get to the web site, go to: http://www.dot.ca.gov

Caltrans Metric

DIST.	COUNTY	ROUTE	KILOMETER POST TOTAL PROJECT	SHEET NO.	TOTAL SHEETS
04	SF	80	13.2/13.9	687R1	1204

George Baker
REGISTERED ENGINEER - CIVIL
12-6-04
PLANS APPROVAL DATE

REGISTERED PROFESSIONAL ENGINEER George S. Baker No. C 57112 Exp. 12/31/05 CIVIL STATE OF CALIFORNIA

The State of California or its officers or agents shall not be responsible for the accuracy or completeness of electronic copies of this plan sheet.

T.Y. LIN / MOFFATT & NICHOL
825 BATTERY STREET
SAN FRANCISCO, CA 94111

LEGEND:

[A] — Girder face designation A

⟨1⟩ — Girder stiffener Type 1

⟨12⟩ — Girder PL Type 12

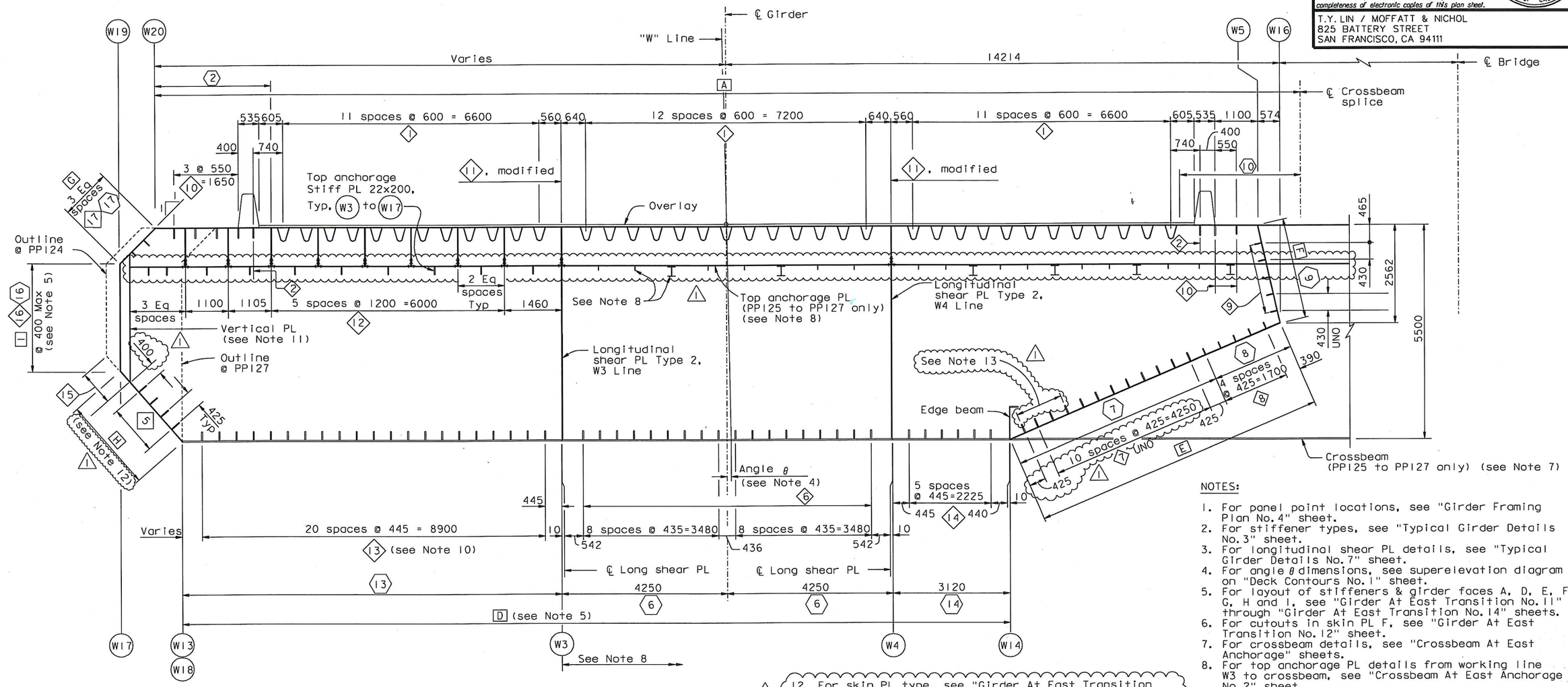

PP124 TO PP127

"W" LINE

SECTION TYPE 4 (East Transition)

1:50

NOTES:

1. For panel point locations, see "Girder Framing Plan No. 4" sheet.
2. For stiffener types, see "Typical Girder Details No. 3" sheet.
3. For longitudinal shear PL details, see "Typical Girder Details No. 7" sheet.
4. For angle θ dimensions, see superelevation diagram on "Deck Contours No. 1" sheet.
5. For layout of stiffeners & girder faces A, D, E, F, G, H and I, see "Girder At East Transition No. 11" through "Girder At East Transition No. 14" sheets.
6. For cutouts in skin PL F, see "Girder At East Transition No. 12" sheet.
7. For crossbeam details, see "Crossbeam At East Anchorage" sheets.
8. For top anchorage PL details from working line W3 to crossbeam, see "Crossbeam At East Anchorage No. 2" sheet.
9. For layout of working points in east transition, see "Girder At East Transition No. 9" and "Girder At East Transition No. 10" sheets.
10. Dimensions given at PP124. For framing details, see "Girder At East Transition No. 12" and "Girder At East Transition No. 14" sheets.
11. For vertical plate details, see "Girder At East Transition Details No. 2" sheet.
12. For skin PL type, see "Girder At East Transition No. 13" and "Girder At East Transition No. 14" sheets.
13. At the Contractor's option, three equal spaces no greater than 425 may be provided between PP119.3 and PP127. Stiffener lines shall be continuous.
14. Upstation of the intersection of the vertical PL and the I plate to PP127, the I plate stiffeners shall be continuous with the vertical PL stiffeners (@ 425 spacing). See "Vertical Plate Elevation" on "Girder At East Transition Details No. 2" sheet.

Daniel J. Turner
REGISTERED PROFESSIONAL ENGINEER Daniel J. Turner No. C 65033 Exp. 06/30/13 CIVIL STATE OF CALIFORNIA

FOR REVISIONS ONLY

CONTRACT CHANGE ORDER NO. 87
SHEET 40 OF 115

REQUESTS FOR INFORMATION NOT ADDRESSED IN THIS CCO REMAIN IN FORCE

ALL DIMENSIONS ARE IN MILLIMETERS UNLESS OTHERWISE SHOWN

R. Vallzadeh/V. Toan/Y.L./W.L./F.C.
DESIGN OVERSIGHT
Roya Vali / Vonal Toan / Y Liu
SIGN OFF DATE 09/01/11

MARK	DATE	DESCRIPTIONS	BY	CH'D	CCO#
1	09/01/11	EAST END OBG	GB	DT	87

REVISIONS

DESIGN	BY G. Baker	CHECKED P. Ritchie	
DETAILS	BY M. Gulyas	CHECKED T. McMeans	
QUANTITIES	BY G. Baker	CHECKED M. Roberts	

PREPARED FOR THE STATE OF CALIFORNIA DEPARTMENT OF TRANSPORTATION

R. Manzanarez
PROJECT ENGINEER

BRIDGE NO. 34-0006L/R
KILOMETER POST 13.2/13.9

SAN FRANCISCO OAKLAND BAY BRIDGE
EAST SPAN SEISMIC SAFETY PROJECT
SELF-ANCHORED SUSPENSION BRIDGE
(SUPERSTRUCTURE & TOWER)

GIRDER AT EAST TRANSITION NO. 5

Rev. Date: 5-18-98

ORIGINAL SCALE IN MILLIMETERS FOR REDUCED PLANS 0 10 20 30 40 50 60 70 80 90 100

CU 04
EA 0120F1

DISREGARD PRINTS BEARING EARLIER REVISION DATES

REVISION DATES (PRELIMINARY STAGE ONLY) 01/13/99 05/12/99 08/02/99 05/24/01 04/08/02 07/24/02 12/19/02

SHEET 270R1 OF

FILE => I:\bb\04-012001\sas\contract plans and cco\cco\cco#87\1-original 09-01-11\dgn\agegd04a.dgn

USERNAME => arivera DATE PLOTTED => 30 AUG 2011 TIME PLOTTED => 16:35:00

100 % PS&E

DIST.	COUNTY	ROUTE	KILOMETER POST TOTAL PROJECT	SHEET NO.	TOTAL SHEETS
04	SF	80	13.2/13.9	688R1	1204

George Baker
REGISTERED ENGINEER - CIVIL
12-6-04
PLANS APPROVAL DATE

REGISTERED PROFESSIONAL ENGINEER George S. Baker No. C 57112 Exp. 12/31/05 CIVIL STATE OF CALIFORNIA

The State of California or its officers or agents shall not be responsible for the accuracy or completeness of electronic copies of this plan sheet.

T.Y. LIN / MOFFATT & NICHOL
825 BATTERY STREET
SAN FRANCISCO, CA 94111

Caltrans now has a web site! To get to the web site, go to: http://www.dot.ca.gov

Caltrans Metric

15. Upstation of the intersection of the vertical PL and the 1 PL to PP127, 1 PL stiffeners shall be continuous with the vertical PL stiffeners (@425 spacing). See "Vertical Plate Elevation" on "Girder At East Transition Details No.2" sheet.

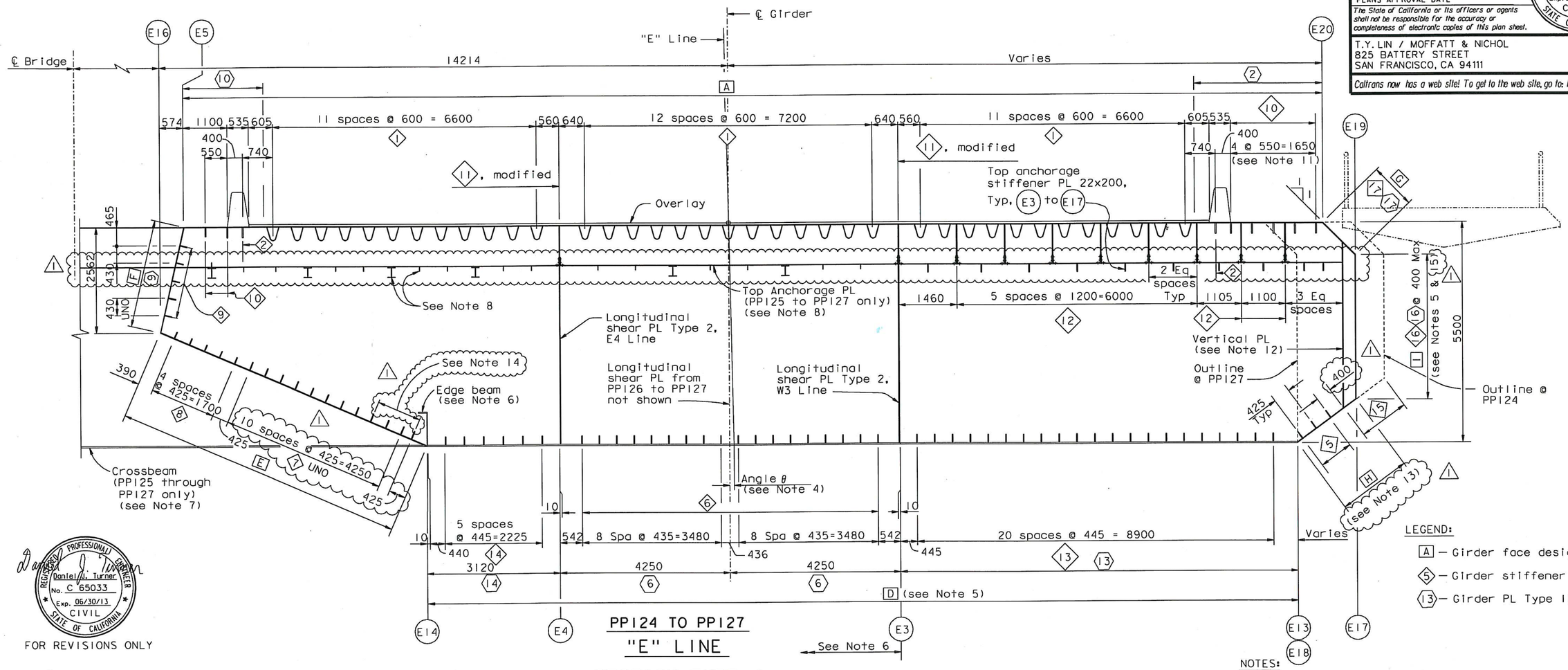

PP124 TO PP127
"E" LINE

SECTION TYPE 4 (East Transition)

1:50

LEGEND:

- A — Girder face designation A
- 5 — Girder stiffener Type 5
- 13 — Girder PL Type 13

NOTES:

1. For panel point locations, see "Girder Framing Plan No.4" sheet.
2. For stiffener types, see "Typical Girder Details No.3" sheet.
3. For longitudinal shear PL details, see "Typical Girder Details No.7" sheet.
4. For angle θ dimensions, see superelevation diagram on "Deck Contours No.6" sheet.
5. For layout of stiffeners & girder faces A, D, E, F, G, H and I, see "Girder At East Transition No.11" through "Girder At East Transition No.14" sheets.
6. Edge beam shall have same dimensions and details as longitudinal shear PL Type 1. For details, see "Typical Girder Details No.8" sheet.
7. For crossbeam details, see "Crossbeam at East Anchorage" sheets.
8. For top anchorage PL details from working line W3 to crossbeam, see "Crossbeam At East Anchorage No.2" sheet.
9. For "Girder at East Transition" sheets, all bolts shall be detailed according to the Bolt Dimension Table. See "Typical Girder Details No.1" sheet. All bolts are HS UNO.
10. Dimensions given at PP124. For framing details, see "Girder At East Transition No.12" and "Girder At East Transition at No.14" sheets.
11. "E" and "W" Line girders are similar but not identical due to HWY curvature.
12. For vertical PL details, see "Girder At East Transition Details No.2" sheet.
13. For skin PL type, see "Girder At East Transition No.13" and "Girder At East Transition No.14" sheets.
14. At the Contractor's option, three equal spaces no greater than 425 may be provided between PP119.3 and PP127. Stiffener lines shall be continuous.

ALL DIMENSIONS ARE IN MILLIMETERS UNLESS OTHERWISE SHOWN

Daniel J. Turner
REGISTERED PROFESSIONAL ENGINEER Daniel J. Turner No. C 65033 Exp. 06/30/13 CIVIL STATE OF CALIFORNIA
FOR REVISIONS ONLY

CONTRACT CHANGE ORDER NO. 87
SHEET 41 OF 115

REQUESTS FOR INFORMATION NOT ADDRESSED IN THIS CCO REMAIN IN FORCE

R. Valizadeh/V. Toan/Y.L./W.L./F.C.
DESIGN OVERSIGHT
Roya Valizadeh / Vonn Toan / Y Liu
SIGN OFF DATE 09/01/11

MARK	DATE	DESCRIPTIONS	BY	CH'D	CCO#
1	09/01/11	EAST END OBG	GB	DT	87

REVISIONS

DESIGN	BY G. Baker	CHECKED	P. Ritchie
DETAILS	BY M. Gulyas	CHECKED	T. McMeans
QUANTITIES	BY G. Baker	CHECKED	M. Roberts

PREPARED FOR THE STATE OF CALIFORNIA DEPARTMENT OF TRANSPORTATION

R. Manzanarez
PROJECT ENGINEER

BRIDGE NO. 34-0006L/R
KILOMETER POST 13.2/13.9

SAN FRANCISCO OAKLAND BAY BRIDGE
EAST SPAN SEISMIC SAFETY PROJECT
SELF-ANCHORED SUSPENSION BRIDGE
(SUPERSTRUCTURE & TOWER)

GIRDER AT EAST TRANSITION NO. 6

Rev. Date: 5-18-98

ORIGINAL SCALE IN MILLIMETERS FOR REDUCED PLANS 0 10 20 30 40 50 60 70 80 90 100

CU 04
EA 0120F1

DISREGARD PRINTS BEARING EARLIER REVISION DATES

REVISION DATES (PRELIMINARY STAGE ONLY) 01/15/99 05/12/99 08/06/99 05/21/01 04/08/02 07/08/02 12/13/02

SHEET 271R1 OF

FILE => I:\bb\04-0120F1\sas\contract plans and cco\cco\cco#87\1-original 09-01-11\dgn\agegd04b.dgn

100% PS&E

USERNAME => ALtshansk DATE PLOTTED => 30 AUG 2011 TIME PLOTTED => 10:28:42

DIST.	COUNTY	ROUTE	KILOMETER POST TOTAL PROJECT	SHEET NO.	TOTAL SHEETS
04	SF	80	13.2/13.9	691R1	1204

George Baker
REGISTERED ENGINEER - CIVIL
12-6-04
PLANS APPROVAL DATE

REGISTERED PROFESSIONAL ENGINEER George S. Baker No. C 57112 Exp. 12/31/05 CIVIL STATE OF CALIFORNIA

The State of California or its officers or agents shall not be responsible for the accuracy or completeness of electronic copies of this plan sheet.

T.Y. LIN / MOFFATT & NICHOL
825 BATTERY STREET
SAN FRANCISCO, CA 94111

Caltrans now has a web site! To get to the web site, go to: http://www.dot.ca.gov

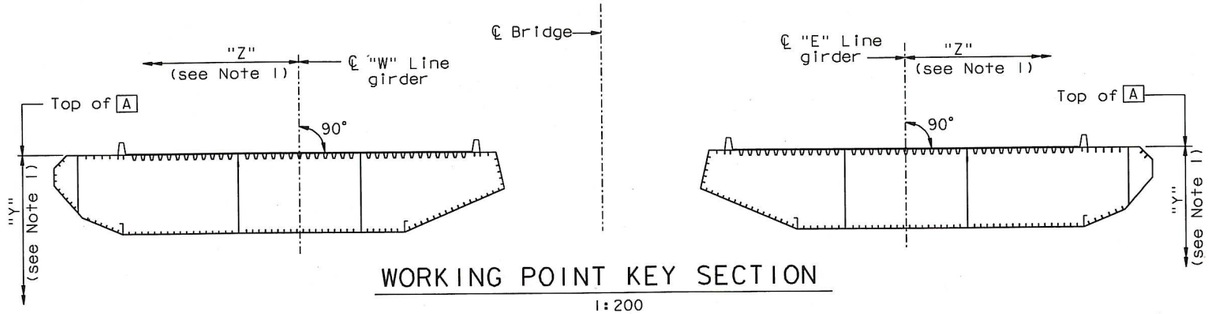

WORKING POINT KEY SECTION

1:200

LONGITUDINAL SHEAR PLATE DIMENSION TABLE (See Note 2)

MEMBER DESIGNATION		PANEL POINT										
		ALONG WORKING LINES E3 and W3				ALONG WORKING LINES E4 and W4				ALONG "E" LINE & "W" LINE		
		9-15, 111-120	120-127	8-9, 127-128.3	128.3-Hinge	9-15, 111-126	126-127	8-9, 127-128.3	128.3-Hinge	126-127	127-128.3	128.3-Hinge
Shear PL	t_A	18	25*	35	18	18	22	35	18	22	22	NA
	t_B	25	28*	NA	22	25	NA	NA	22	NA	NA	NA
Horizontal Stiffener	Type A	PL 22x200	PL 25x230*	PL 28x300	PL 16x170	PL 22x200	PL 25x200	PL 28x300	PL 16x170	PL 25x200	PL 25x200	NA
	Type B	PL 28x220	PL 28x240*	NA	PL 20x220	PL 28x220	NA	NA	PL 20x220	NA	NA	NA
	No of Rows	2	9	2	2	2	2	2	2	2	2	NA
Vertical Stiffener		PL 22x240	WT 305x41*	PL 30x330	PL 20x220	PL 22x240	PL 22x240	PL 30x330	PL 20x220	PL 20x240	PL 20x240	NA
11 (See Note 4)		PL 18	PL 25*	PL 35	PL 18	PL 18	PL 22	PL 35	PL 18	PL 22	PL 22	NA
Longitudinal Splice	PL A	12	16*	22	12	12	14	22	12	14	NA	NA
	PL B	16	18*	NA	14	16	NA	NA	14	NA	NA	NA
	Bolts @ Max Spacing	M24@85	M27@85	M27@85	M24@85	M24@85	M24@85	M27@85	M24@85	M24@85	M24@85	NA
Construction Splice	Bolts	M22	M27	M27	M24	M22	M24	M27	M24	M24	M24	NA
Access Opening Location		PP115.5	PP122.5 (With Door)	NA	Hinge (West of)	PP115.5, PP122.5, PP125.5	NA	NA	Hinge (West of)	NA	NA	NA

* Indicates SPCM PL

BOX GIRDER DECK SUPERELEVATION TRANSITION
(TOP OF STEEL)

ROADWAY	BEGIN		END	
	STATION	SUPERELEVATION	STATION	SUPERELEVATION
EB	61+60.0	2%	61+81.17	3%
WB	61+68.8	2%	61+91.30	3%

WORKING POINT COORDINATE TABLE

LOCATION		WORKING POINT	Y	Z
GIRDER	PANEL POINT			
"W" LINE	118	WWP118	868	18169
	121	WWP121	868	18225
	124	WWP124	5500	14102
	127	WWP127	5500	14144
	128	WWP128	868	13408
"E" LINE	118	EWP118	868	18362
	121	EWP121	868	18325
	124	EWP124	5500	14179
	127	EWP127	5500	14177
	128	EWP128	868	13408

GENERAL LAYOUT OF EAST TRANSITION

All sections through the girder are dimensioned with respect to the "W" and "E" lines, which are determined from the highway drawings. Dimensions shown as horizontal are measured parallel to the roadway deck, and dimensions shown as vertical are measured perpendicular to the deck. Due to the highway curvatures and superelevations, the directions shown as horizontal and vertical vary with the station. The layout of the transition structures may be achieved by performing the following tasks:

1. Determine the "W" and "E" line locations.
2. Determine the spatial orientations of all floorbeams.
3. Determine the spatial locations of the working points given in the table.
4. Determine the locations of all working lines.
5. Determine the intersections of the working lines with the planes of the floorbeams.

The following working lines are straight lines between the defined working points:

Line	Start	End
E17	EWP121	EWP127
E18	EWP118	EWP124
E19	EWP118	EWP121
E19	EWP121	EWP128
E13/E18	EWP124	EWP127
E18	EWP127	EWP128
E13	EWP127	Pt Q
W17	WWP121	WWP127
W18	WWP118	WWP124
W19	WWP118	WWP121
W19	WWP121	WWP128
W13/W18	WWP124	WWP127
W18	WWP127	WWP128
W13	WWP127	Pt Q

Lines E13, E14, W13, W14 shall be straight lines in plan only. They shall be located vertically as shown in the sections.

LEGEND:

t_A Typical thickness of longitudinal shear PL Type 2 (see Note 2)

t_B Thickness of Long shear PL Type 2 strip with opening (see Note 2)

NOTES:

1. Dimension "Y" is measured perpendicular to the slope of girder PL A. Dimension "Z" is measured parallel to the slope of girder PL A.
2. For longitudinal shear PL Type 2 details, see "Girder At East Transition No.15" sheet.
3. The Contractor shall submit geometric layouts to the Engineer for approval prior to producing shop drawings of the East Transition Girders. To simplify fabrication, values in the "Working Point Coordinate Table" may be adjusted, subject to review and approval of the Engineer.
4. At the Contractor's option, PL 20 may be used in lieu of PL 18, subject to review and approval of the Engineer.

REGISTERED PROFESSIONAL ENGINEER Marwan N. Nader No. C 054426 Exp. 12/31/13 CIVIL STATE OF CALIFORNIA

FOR REVISIONS ONLY

CONTRACT CHANGE ORDER NO. 87
SHEET 42 OF 115

REQUESTS FOR INFORMATION NOT ADDRESSED IN THIS CCO REMAIN IN FORCE

ALL DIMENSIONS ARE IN MILLIMETERS UNLESS OTHERWISE SHOWN

R. Vallzadeh/V. Toan/Y.L./W.L./F.C.
DESIGN OVERSIGHT
Roya Valizadeh / Vong Toan / Y Liu
SIGN OFF DATE 04/18/12

MARK	DATE	DESCRIPTIONS	BY	CH'D	CCO#
1	04/18/12	EAST END OBG	GB	MN	87

REVISIONS

	BY	CHECKED
DESIGN	G. Baker	P. Ritchie
DETAILS	M. Gulyas	T. McMeans
QUANTITIES	G. Baker	M. Roberts

PREPARED FOR THE STATE OF CALIFORNIA DEPARTMENT OF TRANSPORTATION

R. Manzanarez
PROJECT ENGINEER

BRIDGE NO. 34-0006L/R
KILOMETER POST 13.2/13.9

SAN FRANCISCO OAKLAND BAY BRIDGE
EAST SPAN SEISMIC SAFETY PROJECT
SELF-ANCHORED SUSPENSION BRIDGE
(SUPERSTRUCTURE & TOWER)

GIRDER AT EAST TRANSITION NO. 9

Rev. Date: 5-18-98

ORIGINAL SCALE IN MILLIMETERS FOR REDUCED PLANS 0 10 20 30 40 50 60 70 80 90 100

CU 04
EA 0120F1

DISREGARD PRINTS BEARING EARLIER REVISION DATES

REVISION DATES (PRELIMINARY STAGE ONLY) 01/27/99 05/28/99 08/06/99 05/24/01 01/08/02 07/24/02 12/19/02

SHEET 274R1 OF

FILE => I:\bb\04-012001\sas\contract plans and cco\cco\cco#87\temp\agegd04e.dgn

USERNAME => DWinrow DATE PLOTTED => 18 APR 2012 TIME PLOTTED => 11:12:39

100% PS&E

DIST.	COUNTY	ROUTE	KILOMETER POST TOTAL PROJECT	SHEET NO.	TOTAL SHEETS
04	SF	80	13.2/13.9	693R1	1204

George Baker
REGISTERED ENGINEER - CIVIL
12-6-04
PLANS APPROVAL DATE

REGISTERED PROFESSIONAL ENGINEER George S. Baker No. C 57112 Exp. 12/31/05 CIVIL STATE OF CALIFORNIA

The State of California or its officers or agents shall not be responsible for the accuracy or completeness of electronic copies of this plan sheet.

T.Y. LIN / MOFFATT & NICHOL
825 BATTERY STREET
SAN FRANCISCO, CA 94111

Caltrans now has a web site! To get to the web site, go to: http://www.dot.ca.gov

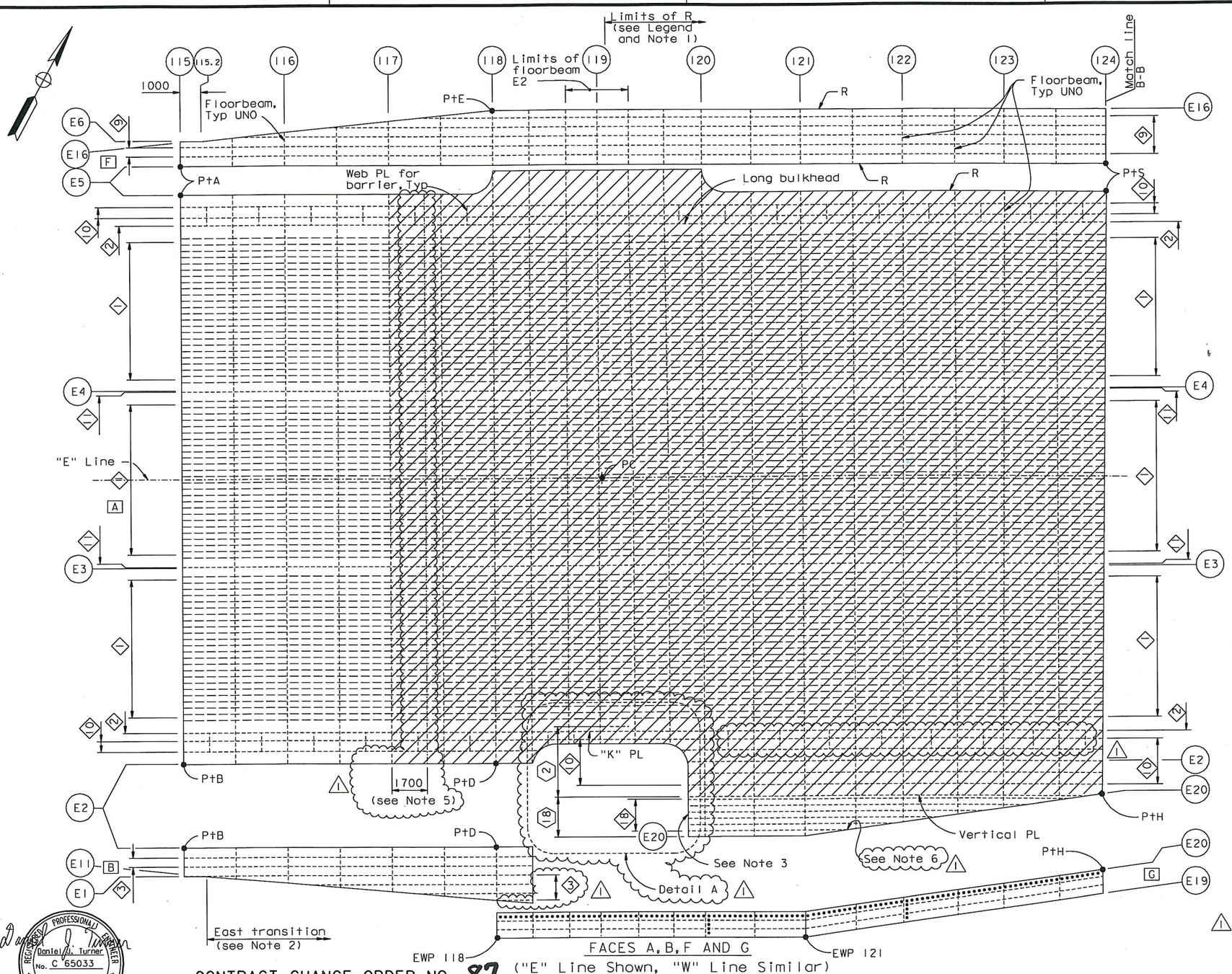

FACES A, B, F AND G
("E" Line Shown, "W" Line Similar)

TOP GIRDER FACE LAYOUT
1:100

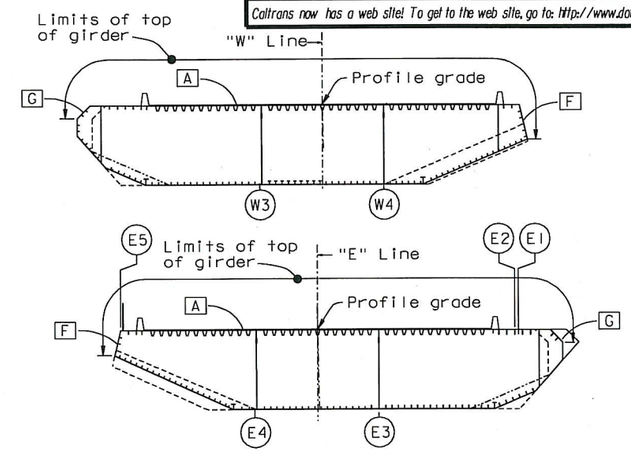

FACE KEY SECTION
1:200

LEGEND:

- [A] Girder face designation A
- ------ Typical girder stiffener Type 2, 3, 9, 10, 11 or other stiffener
- ---- Typical girder stiffener Type 1
- ◇1 Stiffener Type 1 designation
- R - Radius (see Note 1)
- PtA - Point A
- ------ Floorbeam, unless noted otherwise
- ••••••• Bolted splice (see Note 4)
- ▨ "Indicates SPCM shell PL"

NOTES:

1. Plate edges identified with "R" are curved. All other plate edges are straight.
2. For location of east transition, see "Girder Framing Plan No.4" sheet.
3. For saddle cutout limits, see "East Saddle Housing Details No.1" sheet.
4. For PP118 to 124 [G] is an architectural housing. For bolted splice details, see "Girder At East Transition Details No.3" sheet. Housing shall be installed after full cable dead load force is applied to the box girder.
5. At the Contractor's option, non-SPCM material may be provided within these limits.
6. For stiffener Type 18, diaphragm at stiffener termination is not required along line E20.
7. For SPCM shell PL ranges west of PP115 - 700mm, see "Girder Framing Details No.1" sheet.
8. For Detail A, see "Girder At East Transition No.11A" sheet.

Daniel J. Turner
REGISTERED PROFESSIONAL ENGINEER Daniel J. Turner No. C 65033 Exp. 06/30/13 CIVIL STATE OF CALIFORNIA

FOR REVISIONS ONLY

CONTRACT CHANGE ORDER NO. 87
SHEET 43 OF 115

REQUESTS FOR INFORMATION NOT ADDRESSED IN THIS CCO REMAIN IN FORCE

ALL DIMENSIONS ARE IN MILLIMETERS UNLESS OTHERWISE SHOWN

MARK	DATE	DESCRIPTIONS	BY	CH'D	CCO#
1	03/09/12	EAST END OBG	GB	DT	87

REVISIONS

R. Valizadeh/V. Taan/Y.L./W.L./F.C.
DESIGN OVERSIGHT
Roya Valizadeh / Vong Taan / Y Liu
SIGN OFF DATE 03/09/12

Rev. Date: 5-18-98

DESIGN	BY G. Baker	CHECKED P. Ritchie	
DETAILS	BY M. Guiyas	CHECKED T. McMeans	
QUANTITIES	BY G. Baker	CHECKED M. Roberts	

PREPARED FOR THE STATE OF CALIFORNIA DEPARTMENT OF TRANSPORTATION

R. Manzanarez
PROJECT ENGINEER

CU 04
EA 0120F1

BRIDGE NO. 34-0006L/R
KILOMETER POST 13.2/13.9

SAN FRANCISCO OAKLAND BAY BRIDGE
EAST SPAN SEISMIC SAFETY PROJECT
SELF-ANCHORED SUSPENSION BRIDGE
(SUPERSTRUCTURE & TOWER)

GIRDER AT EAST TRANSITION NO. 11

ORIGINAL SCALE IN MILLIMETERS FOR REDUCED PLANS 0 10 20 30 40 50 60 70 80 90 100

DISREGARD PRINTS BEARING EARLIER REVISION DATES 05/31/01 04/08/02 07/20/02 12/19/02

SHEET 276R1 OF

FILE => I:\bb\04-012001\sas\contract plans and cco\cco\cco#87\2-update 03-09-12\dgn\agegd07.dgn

USERNAME => DWinrow DATE PLOTTED => 09 MAR 2012 TIME PLOTTED => 10:06:02

100 % PS&E

DIST.	COUNTY	ROUTE	KILOMETER POST TOTAL PROJECT	SHEET NO.	TOTAL SHEETS
04	SF	80	13.2/13.9	693S1	1204

REGISTERED ENGINEER - CIVIL

09-01-11

PLANS APPROVAL DATE

PROFESSIONAL ENGINEER REGISTERED Marwan N. Nader No. C 054426 Exp. 12/31/11 CIVIL STATE OF CALIFORNIA

The State of California or its officers or agents shall not be responsible for the accuracy or completeness of electronic copies of this plan sheet.

T.Y. LIN / MOFFATT & NICHOL
825 BATTERY STREET
SAN FRANCISCO, CA 94111

Caltrans now has a web site! To get to the web site, go to: http://www.dot.ca.gov

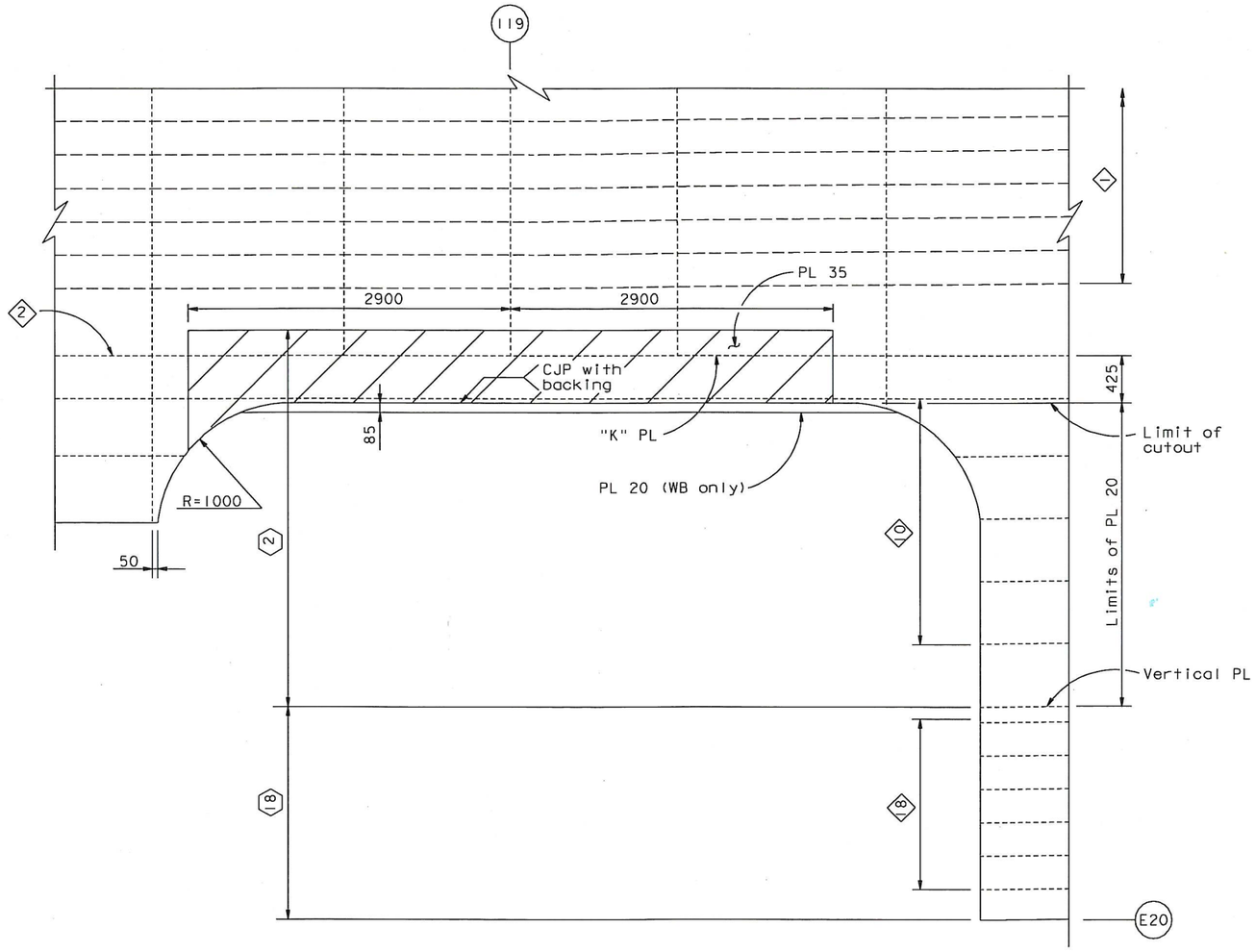

DETAIL A (EB shown, WB similar and opposite hand)
1:50

CONTRACT CHANGE ORDER NO. 87
SHEET 44 OF 115

REQUESTS FOR INFORMATION NOT ADDRESSED IN THIS CCO REMAIN IN FORCE

ALL DIMENSIONS ARE IN MILLIMETERS UNLESS OTHERWISE SHOWN

R. Vallzadeh/V. Toan/Y.L./W.L./F.C.
DESIGN OVERSIGHT
SIGN OFF DATE 09/01/11

MARK	DATE	DESCRIPTIONS	BY	CH'D	CCO#
0	09/01/11	EAST END OBG	GB	MN	87

REVISIONS

	BY	CHECKED
DESIGN	G. Baker	M. Nader
DETAILS	G. Baker	M. Nader
QUANTITIES	G. Baker	M. Nader

PREPARED FOR THE STATE OF CALIFORNIA DEPARTMENT OF TRANSPORTATION

R. Manzanarez
PROJECT ENGINEER

BRIDGE NO. 34-0006L/R
KILOMETER POST 13.2/13.9

SAN FRANCISCO OAKLAND BAY BRIDGE
EAST SPAN SEISMIC SAFETY PROJECT
SELF-ANCHORED SUSPENSION BRIDGE
(SUPERSTRUCTURE & TOWER)

GIRDER AT EAST TRANSITION NO. 11A

Rev. Date: 5-18-98

ORIGINAL SCALE IN MILLIMETERS FOR REDUCED PLANS 0 10 20 30 40 50 60 70 80 90 100

CU 04
EA 0120F1

DISREGARD PRINTS BEARING EARLIER REVISION DATES → 09/01/11

REVISION DATES (PRELIMINARY STAGE ONLY)

SHEET 276S1 OF

FILE => I:\bb\04-012001\sas\contract plans and cco\cco\cco#87\1-original 09-01-11\dgn\agegd07a.dgn

100% PS&E

USERNAME => ALIshansk DATE PLOTTED => 30 AUG 2011 TIME PLOTTED => 10:39:35

Caltrans now has a web site! To get to the web site, go to: http://www.dot.ca.gov

DIST.	COUNTY	ROUTE	KILOMETER POST TOTAL PROJECT	SHEET NO.	TOTAL SHEETS
04	SF	80	13.2/13.9	694R3	1204

Caltrans Metric

George Baker
REGISTERED ENGINEER - CIVIL
12-6-04
PLANS APPROVAL DATE

REGISTERED PROFESSIONAL ENGINEER George S. Baker No. C 57112 Exp. 12/31/05 CIVIL STATE OF CALIFORNIA

The State of California or its officers or agents shall not be responsible for the accuracy or completeness of electronic copies of this plan sheet.

T.Y. LIN / MOFFATT & NICHOL
825 BATTERY STREET
SAN FRANCISCO, CA 94111

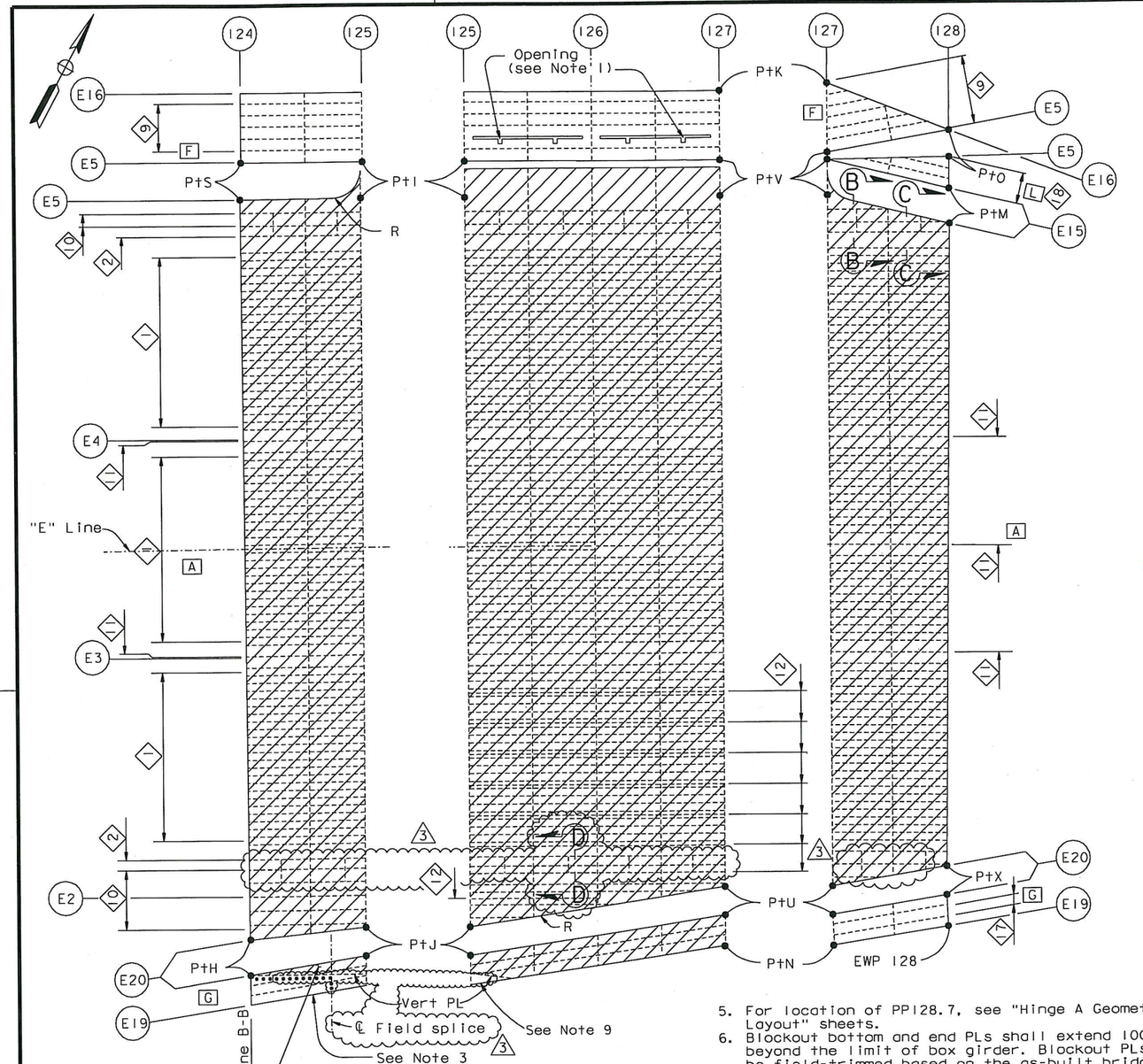

FACES A, F, G and L
("E" Line Shown, "W" Line Similar)
TOP GIRDER FACE LAYOUT
1:100

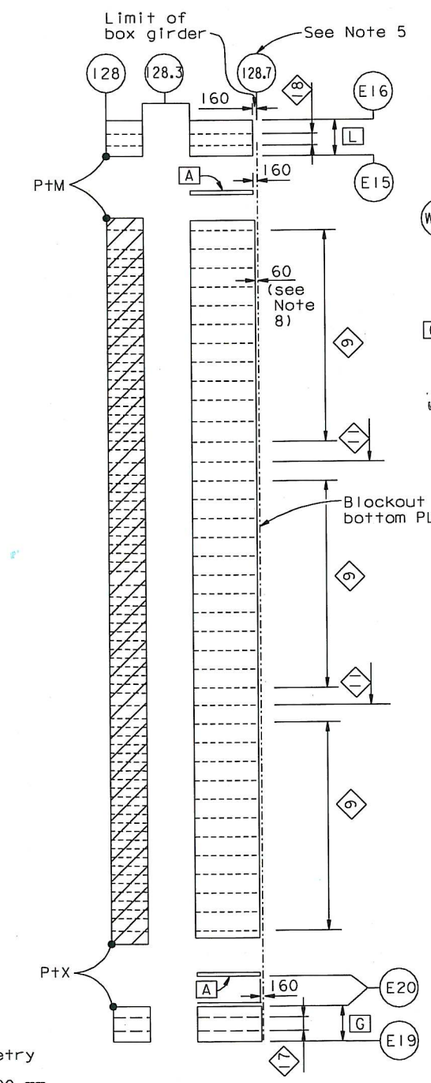

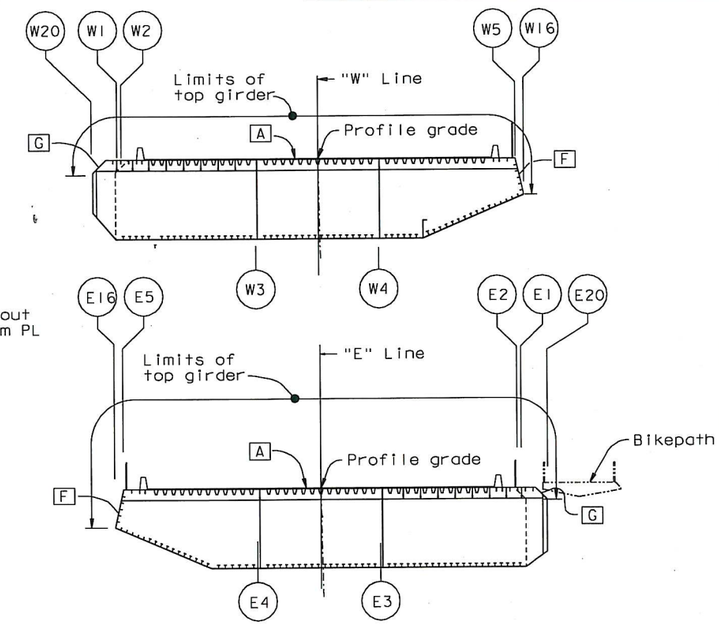

FACE KEY SECTION
1:200

LEGEND:

- [A] Girder face designation A
- Stiffener Type 2, 9, 10, 11 or other stiffener
- Stiffener Type 1 leg
- Floorbeam unless noted otherwise
- ◇1 Stiffener Type 1 designation
- R - Radius (see Note 2)
- Bolted splice (see Notes 3 & 8) △3
- "Indicates SPCM shell PL"
- See Note 4

NOTES:

1. For opening details in girder PL F, see "Crossbeam At East Anchorage" sheets.
2. Plate edges identified with "R" are curved. All other plate edges are straight.
3. For PP124 to 125, the indicated portion of [G] is an architectural housing. For bolted splice details, see "Girder At East Transition Details No.3" sheet. Housing shall be installed after full cable dead load force is applied to the box girder.
4. Deleted.
5. For location of PP128.7, see "Hinge A Geometry Layout" sheets.
6. Blockout bottom and end PLs shall extend 100 mm beyond the limit of box girder. Blockout PLs shall be field-trimmed based on the as-built bridge as directed by the Engineer.
7. For Sections B-B, C-C & D-D, see "Girder at East Transition No.12A" sheet. △3
8. Plates inboard of the architectural splice shall be SPCM. Thickness of architectural housing shall be taken from "Girder at East Transition Details No.3A" sheet.
9. Thickness of non-SPCM PL shall be taken from "Girder at East Transition Details No.3A" sheet. △3
10. For stiffener termination at architectural splice, see "Typical Girder Details No.16" sheet.

ALL DIMENSIONS ARE IN MILLIMETERS UNLESS OTHERWISE SHOWN

REGISTERED PROFESSIONAL ENGINEER Marwan N. Nader No. C 054426 Exp. 12/31/11 CIVIL STATE OF CALIFORNIA

FOR REVISIONS ONLY

CONTRACT CHANGE ORDER NO. 87
SHEET 45 OF 115

REQUESTS FOR INFORMATION NOT ADDRESSED IN THIS CCO REMAIN IN FORCE

MARK	DATE	DESCRIPTIONS	BY	CH'D	CCO#
△3	09/01/11	EAST END OBG	MN	DT	87
△2	11/05/10	PP119 ACCESS & PP125 PLATES	MN	GB	86
△1	04/09/10	HINGE A MODIFICATIONS	MN	GB	120

REVISIONS

R. Valizadeh/V. Toan/Y.L./W.L./F.C.
DESIGN OVERSIGHT
Roya Valizadeh / Vangi Toan / Y Liu
SIGN OFF DATE 09/01/11

Rev. Date: 5-18-98

DESIGN	BY G. Baker	CHECKED P. Ritchie	
DETAILS	BY M. Gulyas	CHECKED T. McMeans	
QUANTITIES	BY G. Baker	CHECKED M. Roberts	

PREPARED FOR THE STATE OF CALIFORNIA DEPARTMENT OF TRANSPORTATION

R. Manzanarez
PROJECT ENGINEER

BRIDGE NO. 34-0006L/R
KILOMETER POST 13.2/13.9

SAN FRANCISCO OAKLAND BAY BRIDGE
EAST SPAN SEISMIC SAFETY PROJECT
SELF-ANCHORED SUSPENSION BRIDGE
(SUPERSTRUCTURE & TOWER)
GIRDER AT EAST TRANSITION NO. 12

CU 04
EA 0120F1

ORIGINAL SCALE IN MILLIMETERS FOR REDUCED PLANS 0 10 20 30 40 50 60 70 80 90 100

DISREGARD PRINTS BEARING EARLIER REVISION DATES → REVISION DATES (PRELIMINARY STAGE ONLY) 05/31/01 01/08/02 01/09/02 12/19/02 05/16/03 09/06/04

SHEET 277R3 OF

FILE => I:\bb\04-012001\sas\contract plans and cco\cco\cco#87\1-original 09-01-11\dgn\agegd08.dgn

100% PS&E

USERNAME => AlishanskyDATE PLOTTED => 30 AUG 2011 TIME PLOTTED => 10:53:28

DIST.	COUNTY	ROUTE	KILOMETER POST TOTAL PROJECT	SHEET NO.	TOTAL SHEETS
04	SF	80	13.2/13.9	694SIRI	1204

Caltrans Metric

REGISTERED ENGINEER - CIVIL

04-09-10
PLANS APPROVAL DATE

REGISTERED PROFESSIONAL ENGINEER Marwan N. Nader No. C 054426 Exp. 12/31/11 CIVIL STATE OF CALIFORNIA

The State of California or its officers or agents shall not be responsible for the accuracy or completeness of electronic copies of this plan sheet.

T.Y. LIN / MOFFATT & NICHOL
825 BATTERY STREET
SAN FRANCISCO, CA 94111

Caltrans now has a web site! To get to the web site, go to: http://www.dot.ca.gov

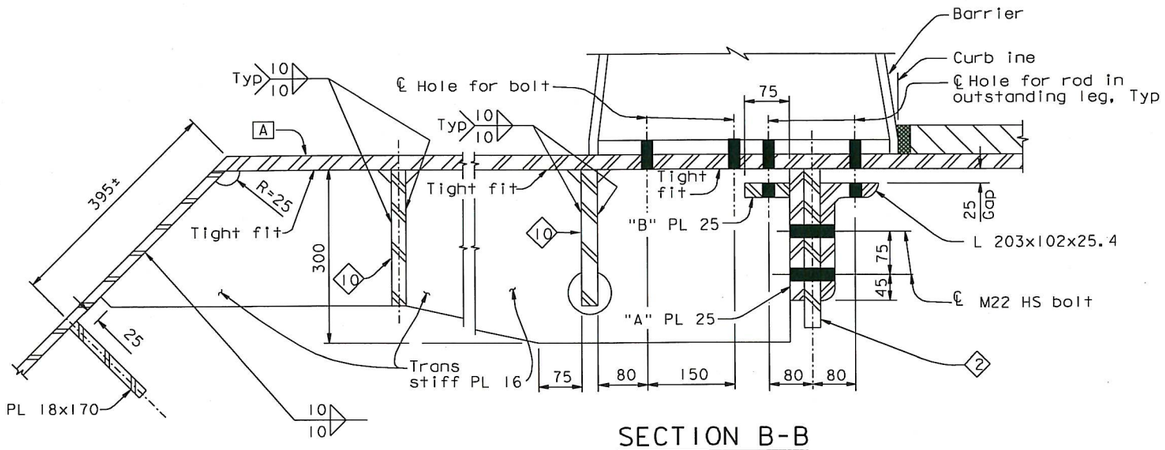

SECTION B-B

1:5

(Section at PP 127.25 Line E/W 15)

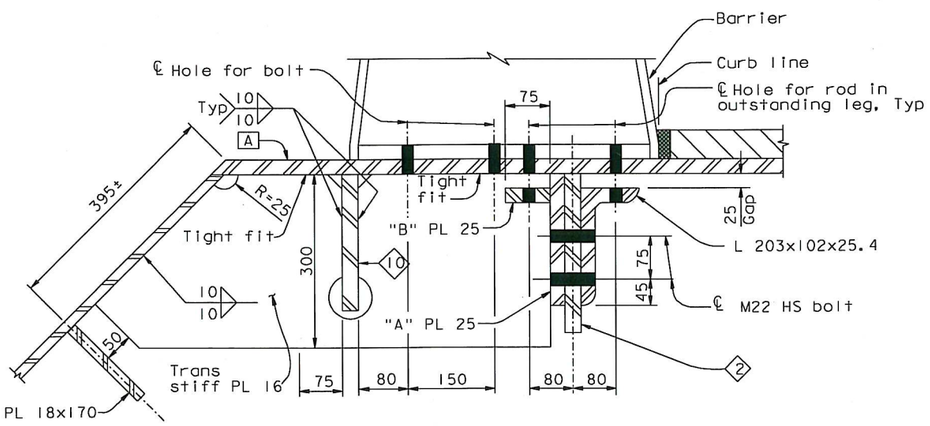

SECTION C-C

1:5

(Section at PP 127.75 Line E/W 15)

1

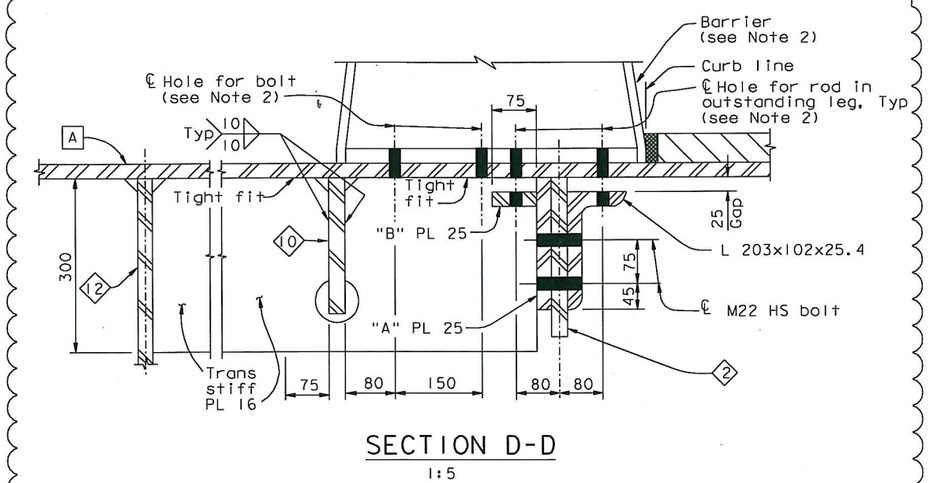

SECTION D-D

1:5

(Section above east cable anchorage)

NOTES:

1. For typical barrier connection details not shown, see "Typical Girder Details No. 14" sheet.
2. For typical barrier details, see "Barrier Details" sheets.

100 % PS&E

CONTRACT CHANGE ORDER NO. 87
SHEET 46 OF 115

REQUESTS FOR INFORMATION NOT ADDRESSED IN THIS CCO REMAIN IN FORCE

ALL DIMENSIONS ARE IN MILLIMETERS UNLESS OTHERWISE SHOWN

R. Valizadeh/V. Toan/Y. L./W. L./F. C.
DESIGN OVERSIGHT
Roya Valizadeh / Vong Toan / Y. Liu
SIGN OFF DATE 09/01/11

MARK	DATE	DESCRIPTIONS	BY	CH'D	CCO#
1	09/01/11	EAST END OBG	MN	DT	87
0	04/09/10	HINGE A MODIFICATIONS	HT	MN	120

REVISIONS

DESIGN	BY H. Tazir	CHECKED M. Nader	
DETAILS	BY H. Tazir	CHECKED M. Nader	
QUANTITIES	BY H. Tazir	CHECKED M. Nader	

PREPARED FOR THE STATE OF CALIFORNIA DEPARTMENT OF TRANSPORTATION

R. Manzanarez
PROJECT ENGINEER

BRIDGE NO. 34-0006L/R
KILOMETER POST 13.2/13.9

SAN FRANCISCO OAKLAND BAY BRIDGE
EAST SPAN SEISMIC SAFETY PROJECT
SELF-ANCHORED SUSPENSION BRIDGE
(SUPERSTRUCTURE & TOWER)

GIRDER AT EAST TRANSITION NO. 12A

Rev. Date: 5-18-98

ORIGINAL SCALE IN MILLIMETERS FOR REDUCED PLANS 0 10 20 30 40 50 60 70 80 90 100

CU 04
EA 0120F1

DISREGARD PRINTS BEARING EARLIER REVISION DATES → 04/09/10

REVISION DATES (PRELIMINARY STAGE ONLY)

SHEET 277SIRI OF

FILE => I:\bb\04-01200I\sas\contract plans and cco\cco\cco#87\I-original 09-01-11\dgn\agegd08a.dgn

USERNAME => ALishanskyDATE PLOTTED => 30 AUG 2011 TIME PLOTTED => 10:56:11

DIST.	COUNTY	ROUTE	KILOMETER POST TOTAL PROJECT	SHEET NO.	TOTAL SHEETS
04	SF	80	13.2/13.9	695R3	1204

George Baker
REGISTERED ENGINEER - CIVIL
12-6-04
PLANS APPROVAL DATE

REGISTERED PROFESSIONAL ENGINEER George S. Baker No. C57112 Exp. 12/31/05 CIVIL STATE OF CALIFORNIA

The State of California or its officers or agents shall not be responsible for the accuracy or completeness of electronic copies of this plan sheet.

T.Y. LIN / MOFFATT & NICHOL
825 BATTERY STREET
SAN FRANCISCO, CA 94111

Caltrans now has a web site! To get to the web site, go to: http://www.dot.ca.gov

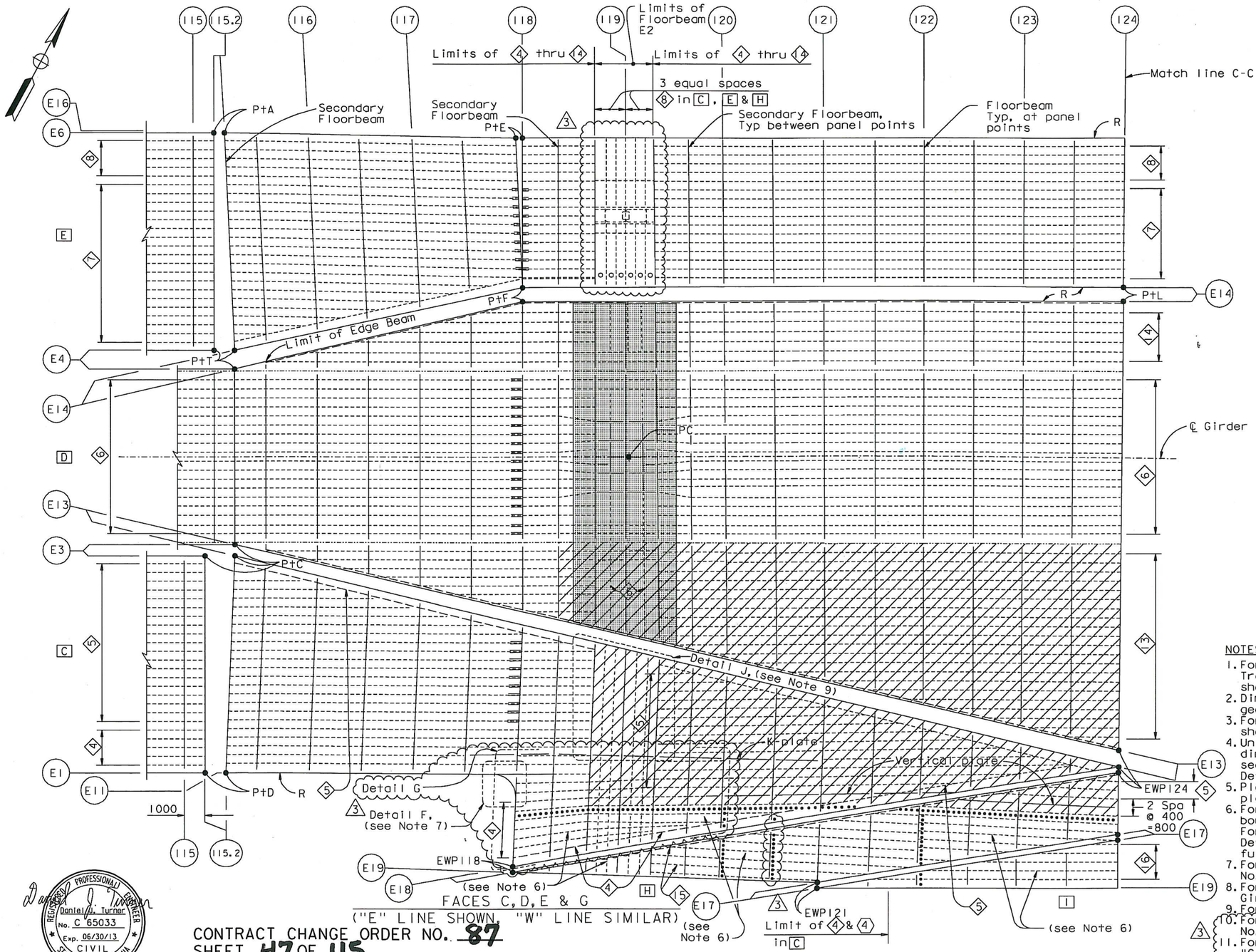

BOTTOM GIRDER FACE LAYOUT

1:100

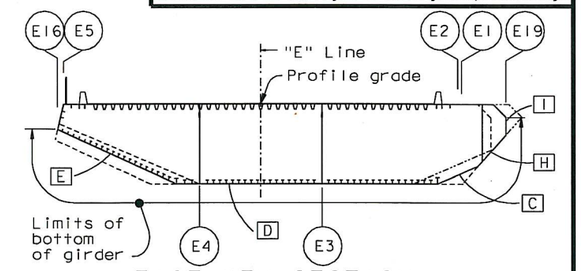

FACE KEY SECTION

1:200

LEGEND:

- "Indicates Key Plate", key plate shall be TTP (see Note 3)
- Indicates SPCM shell plate only UNO
- D — Girder face designation D
- Stiffener type 5, 6, 7, 8 or 9
- Other stiffener
- Edge beam, (see Note 4)
- Longitudinal shear plate type 2
- Bolted splice, (see Note 6)
- 5 — Stiffener type 5 designation
- R - Radius, (see Note 2)
- Pt A - Point A, (see Note 2)
- EWP - "E" Line working point
- K-plate, vertical plate

NOTES:

1. For details and dimensions not shown, see "Girder At East Transition No. 1" through "Girder At East Transition No. 4" sheets.
2. Dimensions not given shall be determined from the highway geometry and box girder working points.
3. For Details at Floorbeam E2, see "Girder At Pier E2 No. 1" sheet.
4. Unless noted otherwise, edge beam shall have the same dimensions and details as longitudinal shear plate type 1, see "Typical Girder Details No. 8" and "Typical Floorbeam Details No. 5" sheets.
5. Plate edges identified with "R" are curved. All other plate edges are straight.
6. For PP118 to 124 the indicated portions of C, H and I, bounded by the bolted splices are architectural housings. For bolted splice details, see "Girder At East Transition Details No. 3" sheet. Housing shall be installed after full cable dead load force is applied to the box girder.
7. For Detail F, see "Girder At East Transition Details No. 4" sheet.
8. For stiffener transition details near PP118, see "Typical Girder Details No. 16A" sheet.
9. For Detail J, see "Girder At East Transition No. 13A" sheet.
10. For Detail G, see "Girder At East Transition Details No. 13A" sheet.
11. For SPCM shell PL ranges west of PP 115 -700 mm, see "Girder Framing Details, No. 2" sheet.

REGISTERED PROFESSIONAL ENGINEER Daniel J. Turner No. C 65033 Exp. 06/30/13 CIVIL STATE OF CALIFORNIA

FOR REVISIONS ONLY

CONTRACT CHANGE ORDER NO. 87
SHEET 47 OF 115

REQUESTS FOR INFORMATION NOT ADDRESSED IN THIS CCO REMAIN IN FORCE

MARK	DATE	DESCRIPTIONS	BY	CH'D	CCO#
3	03/21/12	EAST END OBG	DT	GB	87
2	03/02/12	OBG RETROFIT AT PP119	GB	MN	238
1	05/20/11	STIFFENER TRANSITIONS AT PP14 & PP118	DT	GB	204

REVISIONS

ALL DIMENSIONS ARE IN MILLIMETERS UNLESS OTHERWISE SHOWN

R. Vallzadeh/V. Toan/Y.L./W.L./F.C.
DESIGN OVERSIGHT
SIGN OFF DATE 03/21/12

	BY	CHECKED
DESIGN	G. Baker	P. Ritchie
DETAILS	M. Gulyas	T. McMeans
QUANTITIES	G. Baker	M. Roberts

PREPARED FOR THE STATE OF CALIFORNIA DEPARTMENT OF TRANSPORTATION

R. Manzanarez
PROJECT ENGINEER

BRIDGE NO. 34-0006L/R
KILOMETER POST 13.2/13.9

SAN FRANCISCO OAKLAND BAY BRIDGE
EAST SPAN SEISMIC SAFETY PROJECT
SELF-ANCHORED SUSPENSION BRIDGE
(SUPERSTRUCTURE & TOWER)

GIRDER AT EAST TRANSITION NO. 13

Rev. Date: 5-18-98

ORIGINAL SCALE IN MILLIMETERS FOR REDUCED PLANS 0 10 20 30 40 50 60 70 80 90 100

CU 04
EA 0120F1

DISREGARD PRINTS BEARING EARLIER REVISION DATES

REVISION DATES (PRELIMINARY STAGE ONLY) 05/31/01 01/08/02 07/07/02 12/19/02

SHEET 278R3 OF

FILE => I:\bb\04-012001\sas\contract plans and cco\cco\cco#87\3-update 03-21-12\dgn\agegd09.dgn

USERNAME => DWinrow DATE PLOTTED => 21 MAR 2012 TIME PLOTTED => 11:45:43

100 % PS&E

DIST.	COUNTY	ROUTE	KILOMETER POST TOTAL PROJECT	SHEET NO.	TOTAL SHEETS
04	SF	80	13.2/13.9	695SIR1	1204

REGISTERED ENGINEER - CIVIL

04-18-12
PLANS APPROVAL DATE

REGISTERED PROFESSIONAL ENGINEER Marwan N. Nader No. C 054426 Exp. 12/31/13 CIVIL STATE OF CALIFORNIA

The State of California or its officers or agents shall not be responsible for the accuracy or completeness of electronic copies of this plan sheet.

T.Y. LIN / MOFFATT & NICHOL
825 BATTERY STREET
SAN FRANCISCO, CA 94111

Caltrans now has a web site! To get to the web site, go to: http://www.dot.ca.gov

Caltrans Metric

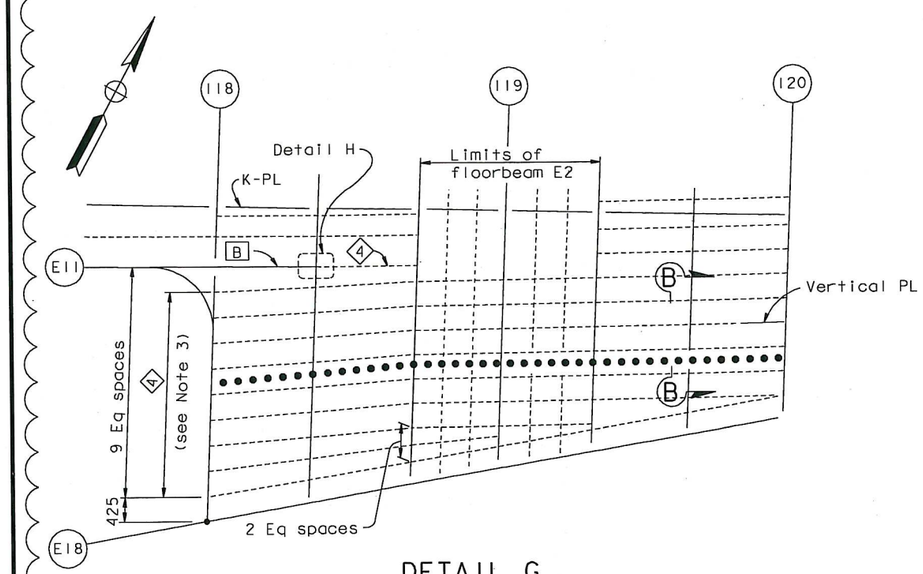

DETAIL G
1:50

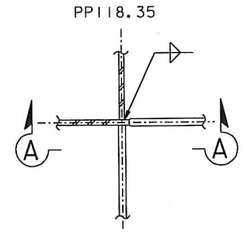

DETAIL H
1:5

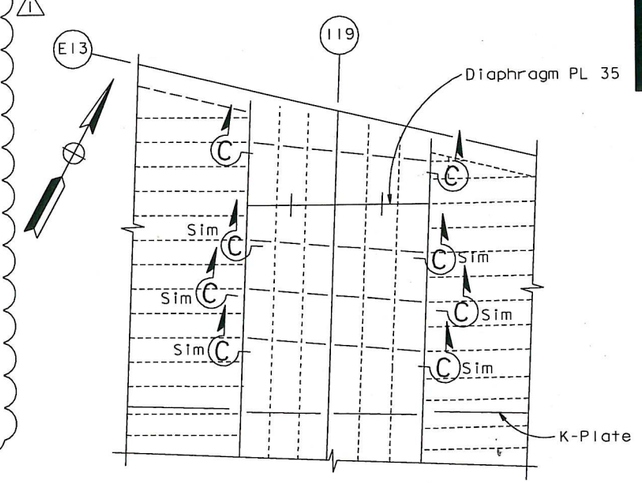

DETAIL J
1:50
("E"-LINE SHOWN, "W"-LINE SIMILAR)

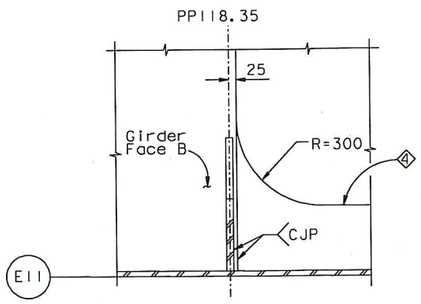

SECTION A-A
1:5

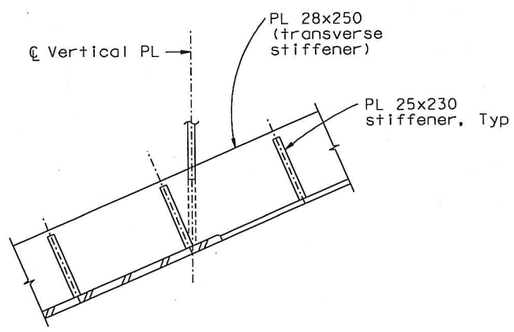

SECTION B-B
1:10

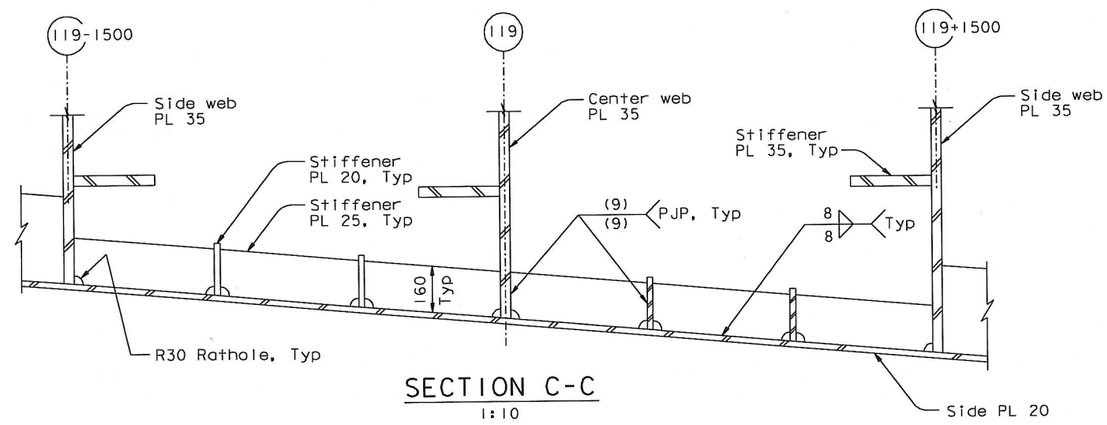

SECTION C-C
1:10

NOTES:

1. At the Contractor's option, bolts in the longitudinal architectural splice between PP118 and PP120 may be shop-tightened.
2. The long slots shall be in the longitudinal direction of the Bridge. The outer shim PL shall not be slotted.
3. Plate stiffeners to be trimmed to provide 60 mm Min clearance underneath the outboard saddle support beam, subject to review and approval of the Engineer.

CONTRACT CHANGE ORDER NO. 87
SHEET 48 OF 115

REQUESTS FOR INFORMATION NOT ADDRESSED IN THIS CCO REMAIN IN FORCE

ALL DIMENSIONS ARE IN MILLIMETERS UNLESS OTHERWISE SHOWN

R. Valizadeh/V. Toan/Y.L./W.L./F.C.
DESIGN OVERSIGHT
SIGN OFF DATE 04/18/12

MARK	DATE	DESCRIPTIONS	BY	CH'D	CCO#
1	04/18/12	EAST END OBG	GB	MN	87
0	03/02/12	OBG RETROFIT AT PP119	GB	MN	238

REVISIONS

	BY	CHECKED
DESIGN	G. Baker	M. Nader
DETAILS	G. Baker	D. Turner
QUANTITIES	G. Baker	D. Turner

PREPARED FOR THE STATE OF CALIFORNIA DEPARTMENT OF TRANSPORTATION

R. Manzanarez
PROJECT ENGINEER

BRIDGE NO. 34-0006L/R
KILOMETER POST 13.2/13.9

SAN FRANCISCO OAKLAND BAY BRIDGE
EAST SPAN SEISMIC SAFETY PROJECT
SELF-ANCHORED SUSPENSION BRIDGE
(SUPERSTRUCTURE & TOWER)

GIRDER AT EAST TRANSITION NO. 13A

Rev. Date: 5-18-98

ORIGINAL SCALE IN MILLIMETERS FOR REDUCED PLANS 0 10 20 30 40 50 60 70 80 90 100

CU 04
EA 0120F1

DISREGARD PRINTS BEARING EARLIER REVISION DATES → 04/18/12

SHEET 278SIR1 OF

FILE => I:\bb\04-012001\sas\contract plans and cco\cco\cco#87\temp\agegd09a.dgn

100% PS&E

USERNAME => DWinrow DATE PLOTTED => 18 APR 2012 TIME PLOTTED => 11:13:41

Caltrans now has a web site! To get to the web site, go to: http://www.dot.ca.gov

DIST.	COUNTY	ROUTE	KILOMETER POST TOTAL PROJECT	SHEET NO.	TOTAL SHEETS
04	SF	80	13.2/13.9	696R3	1204

Caltrans Metric

George Baker
REGISTERED ENGINEER - CIVIL
12-6-04
PLANS APPROVAL DATE

REGISTERED PROFESSIONAL ENGINEER George S. Baker No. C 57112 Exp. 12/31/05 CIVIL STATE OF CALIFORNIA

The State of California or its officers or agents shall not be responsible for the accuracy or completeness of electronic copies of this plan sheet.

T.Y. LIN / MOFFATT & NICHOL
825 BATTERY STREET
SAN FRANCISCO, CA 94111

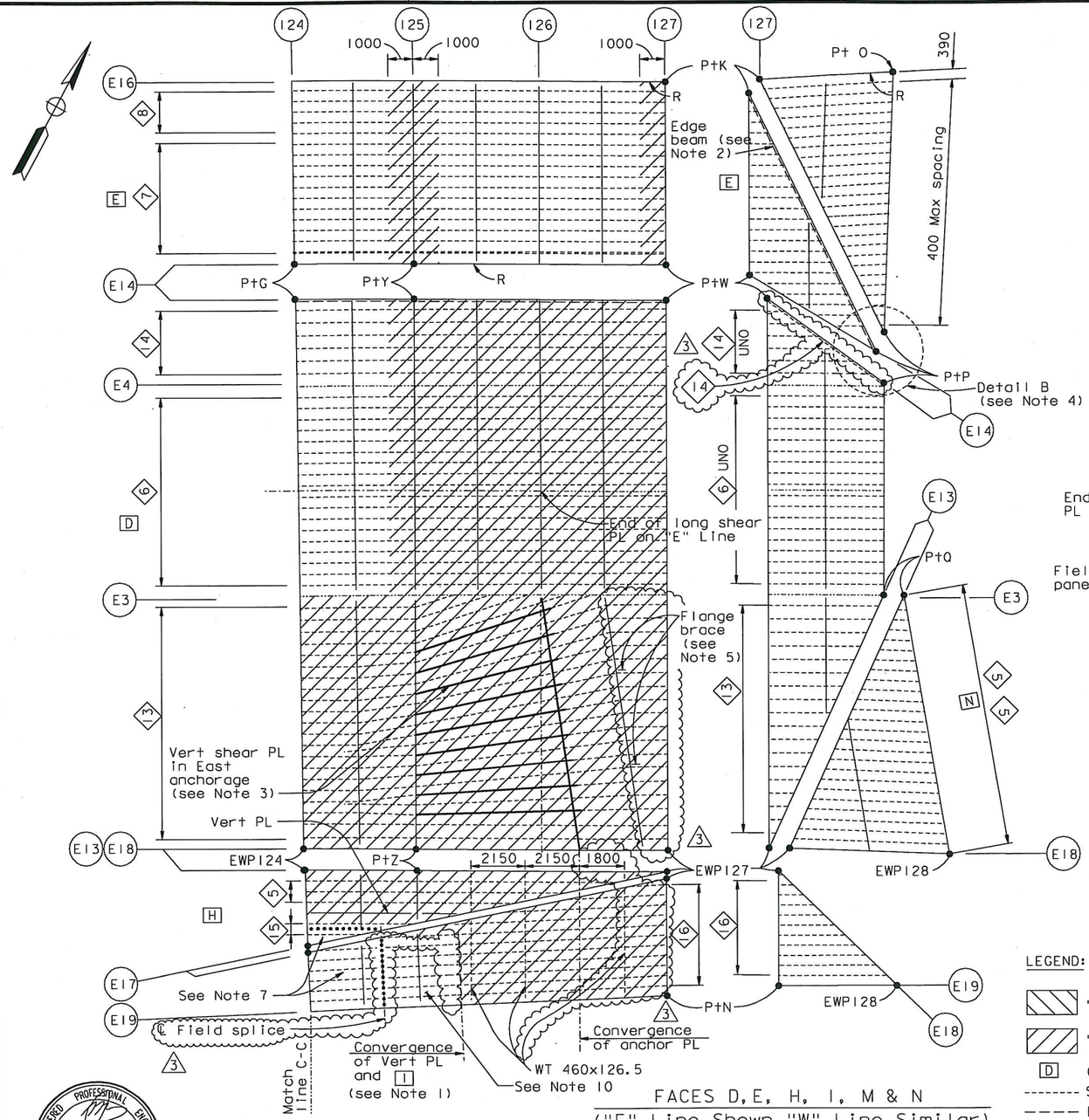

FACES D, E, H, I, M & N
("E" Line Shown, "W" Line Similar)
1:100

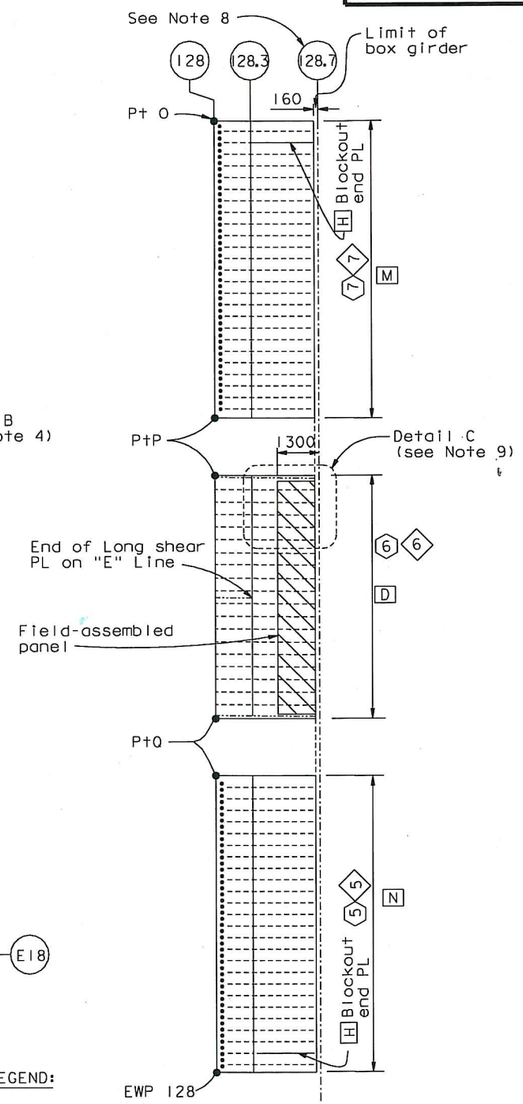

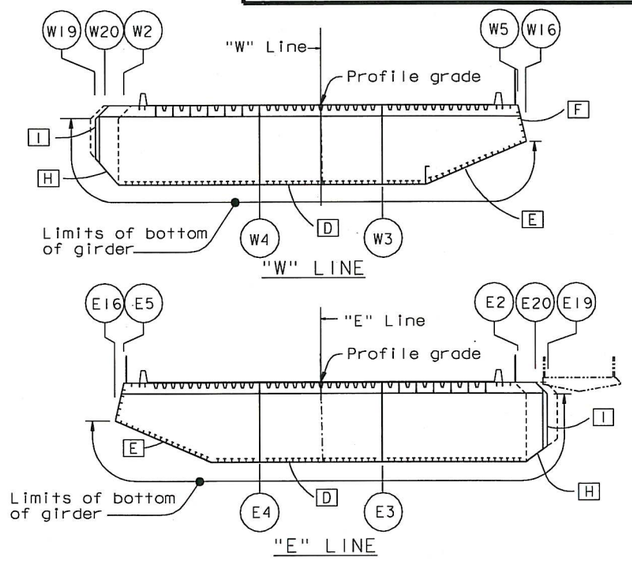

FACE KEY SECTION
1:200

LEGEND:

- "Indicates Field-Assembled panel"
- "Indicates SPCM shell PL"
- D Girder face designation D
- Stiffener Type 5, 6, 7, 8, 9, 13, 14, 15.
- Edge beam (see Note 2)
- Longitudinal shear PL Type 2, UNO
- Bolted splice (see Note 7)
- 5 Stiffener Type 5
- R - Radius
- Pt A - Point A

NOTES:

1. For details of convergence of vertical PL and girder PL I, see "Girder At East Transition Details No. 3" sheet.
2. Edge beam shall have same dimensions and details as longitudinal shear PL Type 1 UNO. See "Typical Girder Details No. 8" and "Typical Floorbeam Details No. 5" sheets. For edge beam connection at PP128, see Detail B on "Girder At East Transition Details No. 3" sheet.
3. For east anchorage details, see "East Cable Anchorage "E" Line Layout" sheets.
4. For Detail B, see "Girder At East Transition Details No. 3" sheet.
5. For flange brace details, see "Floorbeam At East Transition" sheets.
6. Plate edges identified with "R" are curved. All other plate edges are straight.
7. For PP124 to 125.5, the indicated portions of H and I bounded by the bolted splices are architectural housings. For bolted splice details, see "Girder At East Transition Details No. 3" sheet. Housing shall be installed after full cable dead load force is applied to the box girder.
8. For location of PP128.7, see "Hinge A Geometry Layout" sheets.
9. For Detail C, see "Girder At East Transition Details No. 5" sheet.
10. Thickness of non-SPCM PL shall be taken from PP122-PP125 column on Girder Plate Thickness Table, see "Typical Girder Details No. 1" sheet.

ALL DIMENSIONS ARE IN MILLIMETERS UNLESS OTHERWISE SHOWN

CONTRACT CHANGE ORDER NO. 87 BOTTOM GIRDER FACE LAYOUT
SHEET 49 OF 115
1:100

REGISTERED PROFESSIONAL ENGINEER Marwan N. Nader No. C 054426 Exp. 12/31/13 CIVIL STATE OF CALIFORNIA

FOR REVISIONS ONLY

REQUESTS FOR INFORMATION NOT ADDRESSED IN THIS CCO REMAIN IN FORCE

MARK	DATE	DESCRIPTIONS	BY	CH'D	CCO#
3	03/09/12	EAST END OBG	MN	DT	87
2	11/05/10	PP119 ACCESS & PP125 PLATES	MN	GB	86
1	04/09/10	HINGE A MODIFICATIONS	MN	GB	120

REVISIONS

R. Valizadeh/V. Toan/Y.L./W.L./F.C.
DESIGN OVERSIGHT
SIGN OFF DATE 03/09/12

Rev. Date: 5-18-98

DESIGN	BY G. Baker	CHECKED P. Ritchie	
DETAILS	BY M. Gulyas	CHECKED T. McMeans	
QUANTITIES	BY G. Baker	CHECKED M. Roberts	

PREPARED FOR THE STATE OF CALIFORNIA DEPARTMENT OF TRANSPORTATION

R. Manzanarez
PROJECT ENGINEER

BRIDGE NO. 34-0006L/R
KILOMETER POST 13.2/13.9

SAN FRANCISCO OAKLAND BAY BRIDGE
EAST SPAN SEISMIC SAFETY PROJECT
SELF-ANCHORED SUSPENSION BRIDGE
(SUPERSTRUCTURE & TOWER)

GIRDER AT EAST TRANSITION NO. 14

ORIGINAL SCALE IN MILLIMETERS FOR REDUCED PLANS 0 10 20 30 40 50 60 70 80 90 100

CU 04
EA 0120F1

DISREGARD PRINTS BEARING EARLIER REVISION DATES

REVISION DATES (PRELIMINARY STAGE ONLY) 08/08/99 05/30/01 04/08/02 01/08/02 12/18/02 05/16/03

SHEET 279R3 OF

FILE => I:\bb\04-012001\sas\contract plans and cco\cco\cco#87\2-update 03-09-12\dgn\agegd10.dgn

USERNAME => DWinrow DATE PLOTTED => 09 MAR 2012 TIME PLOTTED => 10:07:52

100% PS&E

Caltrans now has a web site! To get to the web site, go to: http://www.dot.ca.gov

Caltrans Metric

DIST.	COUNTY	ROUTE	KILOMETER POST TOTAL PROJECT	SHEET NO.	TOTAL SHEETS
04	SF	80	13.2/13.9	697R3	1204

George Baker
REGISTERED ENGINEER - CIVIL
12-6-04
PLANS APPROVAL DATE

REGISTERED PROFESSIONAL ENGINEER George S. Baker No. C 57112 Exp. 12/31/05 CIVIL STATE OF CALIFORNIA

The State of California or its officers or agents shall not be responsible for the accuracy or completeness of electronic copies of this plan sheet.

T.Y. LIN / MOFFATT & NICHOL
825 BATTERY STREET
SAN FRANCISCO, CA 94111

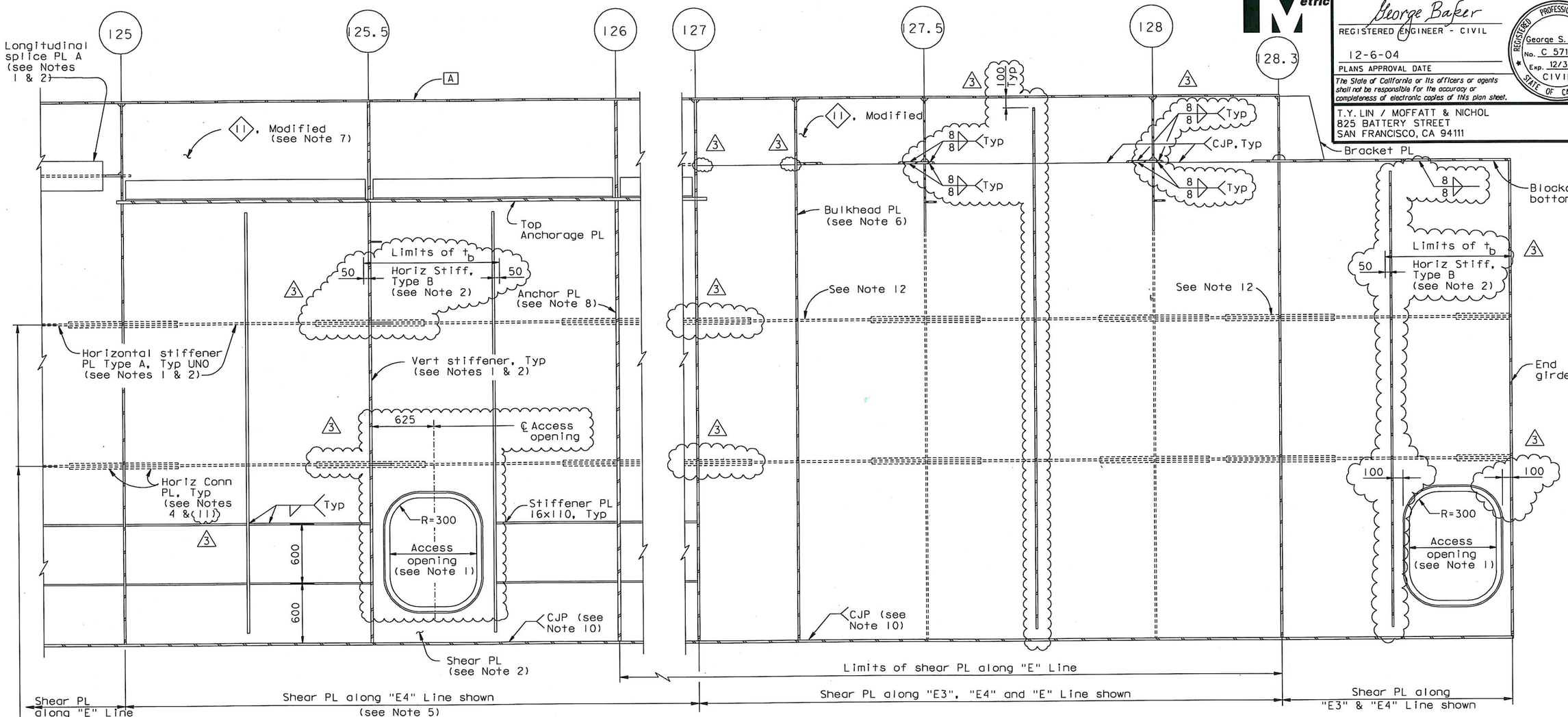

Location to match horizontal stiffener spacing in typical girder section Type 2 (see Note 1)

ELEVATION
LONGITUDINAL SHEAR PLATE TYPE 2
SECTION B-B

1:20

("E" Line girder shown, "W" Line girder similar)

10. The longitudinal shear PL to girder face "D" weld shall be a CJP from the CL splice near PP111 to PP128.7.
11. Horizontal connection detail applies only where existing floorbeam horizontal stiffeners coincide with shear PL stiffeners.

NOTES:

1. Longitudinal shear PL Type 2 from PP115 to PP125 is similar to longitudinal shear PL Type 2 in typical girder section Type 2. For details not shown, see "Typical Girder Details No.7" sheet.
2. For longitudinal shear PL Dimension Table and access opening locations from PP115 to hinge A, see "Girder At East Transition No.9" sheet.
3. For floorbeam details not shown, see "Floorbeam At East Transition" sheets.
4. For horizontal connection PL detail, see "Typical Girder Details No.9" sheet.
5. For detail of longitudinal shear PL Type 2 along "E3" Line from PP125 to PP127, see "Girder At East Transition No.6" sheet.
6. For details of bulkhead PL, see "Floorbeam At Transition No.8" sheet.
7. For details of 11, Modified not shown, see 12 on "Girder At East Transition No.17" sheet.
8. For details of anchor PL, see "East Cable Anchorage "E" Line Layout" and "East Cable Anchorage "W" Line Layout" sheets.
9. For details of end girder PL, see "Floorbeam At East Transition No.10" sheet.

ALL DIMENSIONS ARE IN MILLIMETERS UNLESS OTHERWISE SHOWN

REGISTERED PROFESSIONAL ENGINEER Marwan N. Nader No. C 054426 Exp. 12/31/13 CIVIL STATE OF CALIFORNIA

FOR REVISIONS ONLY

CONTRACT CHANGE ORDER NO. 87
SHEET 50 OF 115

REQUESTS FOR INFORMATION NOT ADDRESSED IN THIS CCO REMAIN IN FORCE

MARK	DATE	DESCRIPTIONS	BY	CH'D	CCO#
3	03/09/12	EAST END OBG	GB	MN	87
2	07/31/09	LONGITUDINAL SHEAR PLATE	DT	GB	122
1	07/30/07	HINGE A REACTION-SHEAR PLATES	DT	GB	50

REVISIONS

R. Valizadeh/V. Toan/Y.L./W.L./F.C.
DESIGN OVERSIGHT
SIGN OFF DATE 03/09/12

Rev. Date: 5-18-98

DESIGN	BY G. Baker	CHECKED	P. Ritchie
DETAILS	BY M. Guiyas	CHECKED	T. McMeans
QUANTITIES	BY G. Baker	CHECKED	M. Roberts

PREPARED FOR THE STATE OF CALIFORNIA DEPARTMENT OF TRANSPORTATION

R. Manzanarez
PROJECT ENGINEER

BRIDGE NO. 34-0006L/R
KILOMETER POST 13.2/13.9

SAN FRANCISCO OAKLAND BAY BRIDGE
EAST SPAN SEISMIC SAFETY PROJECT
SELF-ANCHORED SUSPENSION BRIDGE
(SUPERSTRUCTURE & TOWER)

GIRDER AT EAST TRANSITION NO. 15

ORIGINAL SCALE IN MILLIMETERS FOR REDUCED PLANS 0 10 20 30 40 50 60 70 80 90 100

CU 04
EA 0120F1

DISREGARD PRINTS BEARING EARLIER REVISION DATES

REVISION DATES (PRELIMINARY STAGE ONLY) 05/15/98 08/12/99 05/31/01 01/08/02 07/07/02 12/19/02 11/13/05

SHEET 280R3 OF

FILE => L:\BB\04-012001\SAS\Contract Plans and CCO\CCO\CCO#87\2-Update 03-09-12\DGN\ogand17.dgn

100 % PS&E

USERNAME => DWinrow DATE PLOTTED => 09 MAR 2012 TIME PLOTTED => 10:09:33

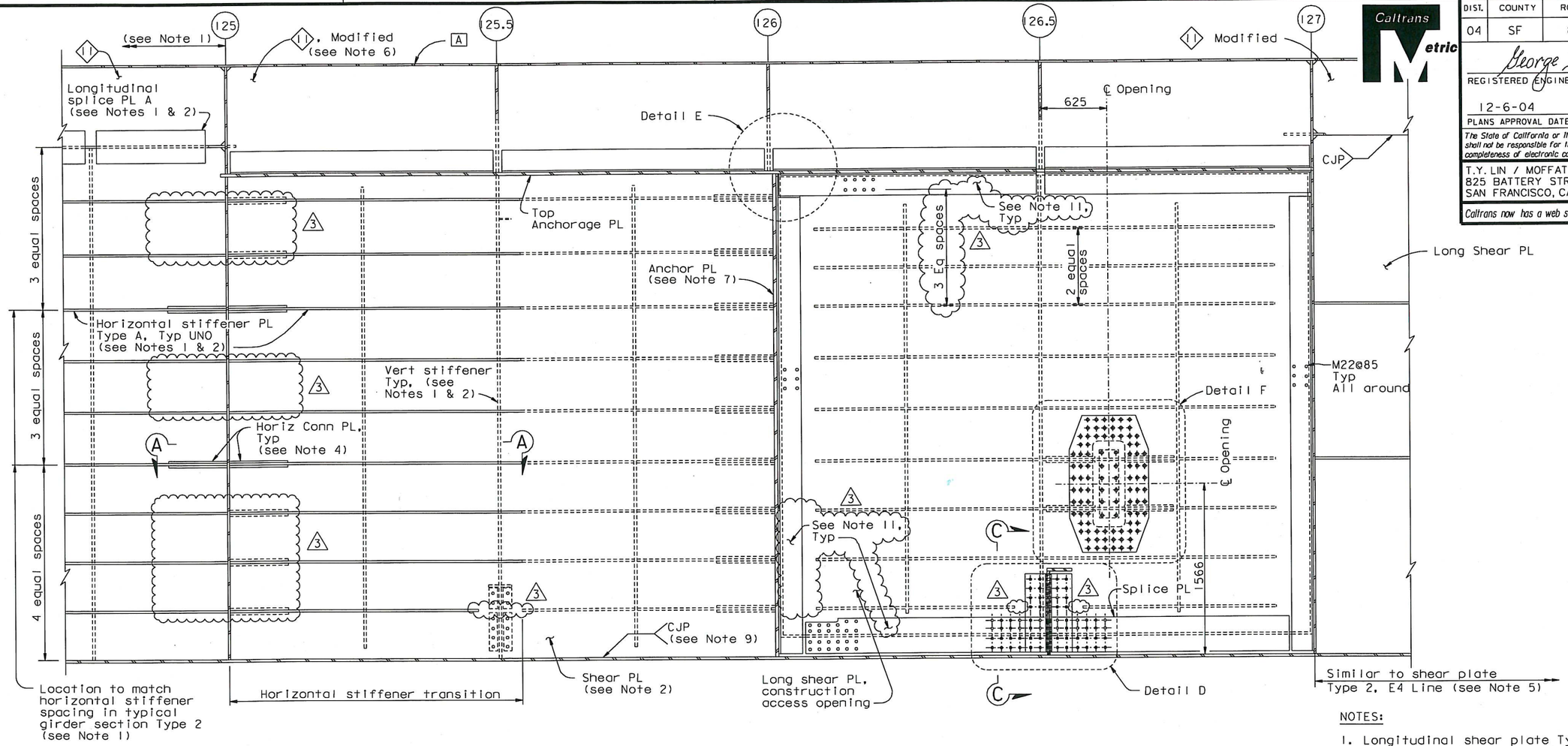

ELEVATION - LONGITUDINAL SHEAR PLATE TYPE 2, E3, W3 LINE ONLY (PP120 TO PP127)

SECTION C-C

1:20

(E3 Line shown, W3 Line similar)

NOTES:

1. Longitudinal shear plate Type 2 from PP115 to PP120 is similar to longitudinal shear plate Type 2 in typical girder section Type 2. For details not shown, see "Typical Girder Details No.7" sheet.
2. For longitudinal shear plate dimension table and access opening locations from PP115 to hinge A, see "Girder At East Transition No.9" sheet.
3. For floorbeam details not shown, see "Floorbeam At East Transition" sheets.
4. For horizontal connection plate detail, see "Typical Girder Details No.9" sheet.
5. For detail of longitudinal shear plate Type 2 from PP127 to PP128.7, see "Girder At East Transition No.15" sheet.
6. For details of 11, Modified not shown, see 12 on "Girder At East Transition No.17" sheet.
7. For details of anchor PL, see "East Cable Anchorage "W" Line Layout" and "East Cable Anchorage "W" Line Layout" sheets.
8. For Sections A-A, C-C and Details D and E, see "Girder At East Transition Details No.4" sheet.
9. The Longitudinal Shear Plate to Girder Face "D" weld shall be a CJP from the CL Splice near PP111 to PP128.7.
10. For Detail F, see "Girder At East Transition Details No.6" sheet.
11. At the Contractor's option, the bolted splice between PP126 and PP127 may be replaced with a CJP weld, subject to review and approval of the Engineer. (3)

ALL DIMENSIONS ARE IN MILLIMETERS UNLESS OTHERWISE SHOWN

DIST.	COUNTY	ROUTE	KILOMETER POST TOTAL PROJECT	SHEET NO.	TOTAL SHEETS
04	SF	80	13.2/13.9	698R3	1204

George Baker
REGISTERED ENGINEER - CIVIL
12-6-04
PLANS APPROVAL DATE

REGISTERED PROFESSIONAL ENGINEER George S. Baker No. C 57112 Exp. 12/31/05 CIVIL STATE OF CALIFORNIA

The State of California or its officers or agents shall not be responsible for the accuracy or completeness of electronic copies of this plan sheet.

T.Y. LIN / MOFFATT & NICHOL
825 BATTERY STREET
SAN FRANCISCO, CA 94111

Caltrans now has a web site! To get to the web site, go to: http://www.dot.ca.gov

REGISTERED PROFESSIONAL ENGINEER Marwan N. Nader No. C 054426 Exp. 12/31/11 CIVIL STATE OF CALIFORNIA

FOR REVISIONS 1 AND 2 ONLY

REGISTERED PROFESSIONAL ENGINEER Daniel J. Turner No. C 65033 Exp. 06/30/13 CIVIL STATE OF CALIFORNIA

FOR REVISIONS 3 ONLY

CONTRACT CHANGE ORDER NO. 87
SHEET 51 OF 115

REQUESTS FOR INFORMATION NOT ADDRESSED IN THIS CCO REMAIN IN FORCE

MARK	DATE	DESCRIPTIONS	BY	CH'D	CCO#
3	09/01/11	EAST END OBG	DT	GB	87
2	06/10/11	ADDITIONAL ACCESS AT EAST END	DT	MN	202
1	07/31/09	LONGITUDINAL SHEAR PLATE	DT	GB	122

REVISIONS

R. Valizadeh/V. Toan/Y.L./W.L./F.C.
DESIGN OVERSIGHT
Roya Valizadeh / Vonn Toan / Y. Liu
SIGN OFF DATE 09/01/11

DESIGN	BY G. Baker	CHECKED	P. Ritchie
DETAILS	BY M. Gulyas	CHECKED	T. McMeans
QUANTITIES	BY G. Baker	CHECKED	M. Roberts

PREPARED FOR THE STATE OF CALIFORNIA DEPARTMENT OF TRANSPORTATION

R. Manzanarez
PROJECT ENGINEER

BRIDGE NO. 34-0006L/R
KILOMETER POST 13.2/13.9

SAN FRANCISCO OAKLAND BAY BRIDGE
EAST SPAN SEISMIC SAFETY PROJECT
SELF-ANCHORED SUSPENSION BRIDGE
(SUPERSTRUCTURE & TOWER)

GIRDER AT EAST TRANSITION NO. 16

Rev. Date: 5-18-98

ORIGINAL SCALE IN MILLIMETERS FOR REDUCED PLANS 0 10 20 30 40 50 60 70 80 90 100

CU 04
EA 0120F1

DISREGARD PRINTS BEARING EARLIER REVISION DATES

REVISION DATES (PRELIMINARY STAGE ONLY) 5/18/99 01/26/99 05/31/01 01/28/02 01/28/02 12/19/02

SHEET 281R3 OF

FILE => I:\bb\04-01200I\sas\contract plans and cco\cco\cco=87\1-original 09-01-11\dgn\agand10.dgn

100 % PS&E

DATE PLOTTED => 30 AUG 2011 TIME PLOTTED => 09:36:36

USERNAME => PTom

DIST.	COUNTY	ROUTE	KILOMETER POST TOTAL PROJECT	SHEET NO.	TOTAL SHEETS
04	SF	80	13.2/13.9	699R1	1204

George Baker
REGISTERED ENGINEER - CIVIL
12-6-04
PLANS APPROVAL DATE

REGISTERED PROFESSIONAL ENGINEER George S. Baker No. C57112 Exp. 12/31/05 CIVIL STATE OF CALIFORNIA

The State of California or its officers or agents shall not be responsible for the accuracy or completeness of electronic copies of this plan sheet.

T.Y. LIN / MOFFATT & NICHOL
825 BATTERY STREET
SAN FRANCISCO, CA 94111

Caltrans now has a web site! To get to the web site, go to: http://www.dot.ca.gov

Caltrans Metric

LEGEND:

"Indicates SPCM PL"

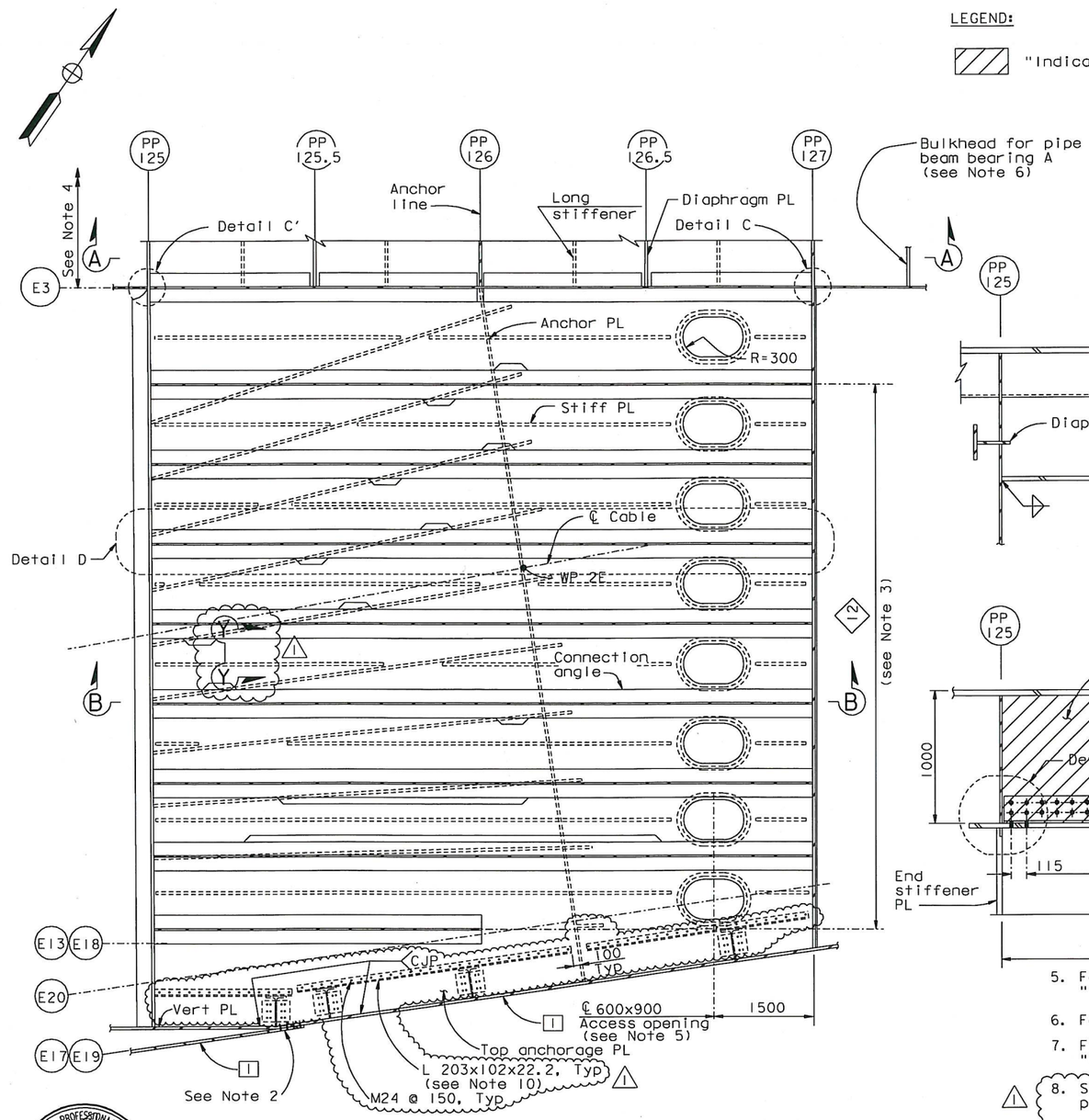

AT LEVEL OF TOP ANCHORAGE PLATE

PLAN SECTION

1:40

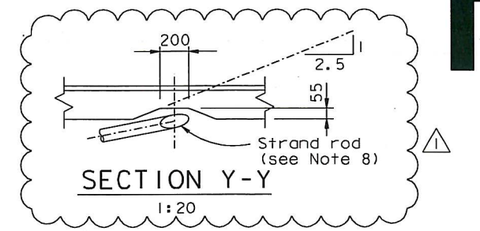

SECTION Y-Y

1:20

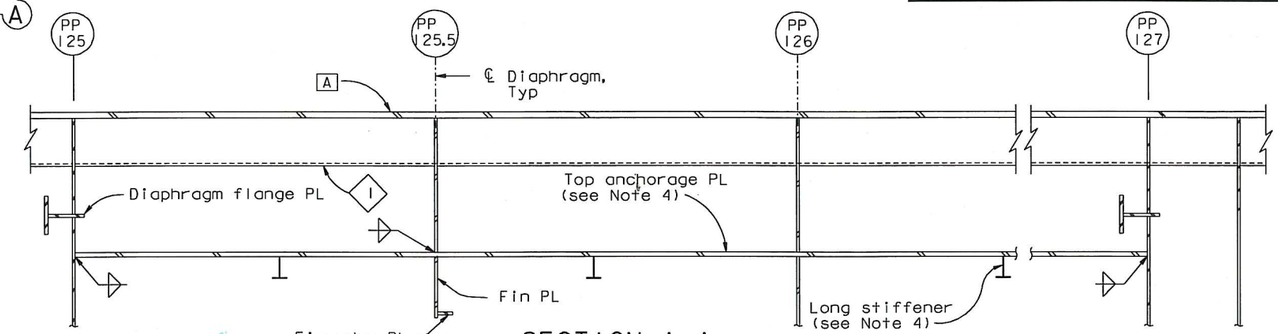

SECTION A-A (See Note 4)

1:20

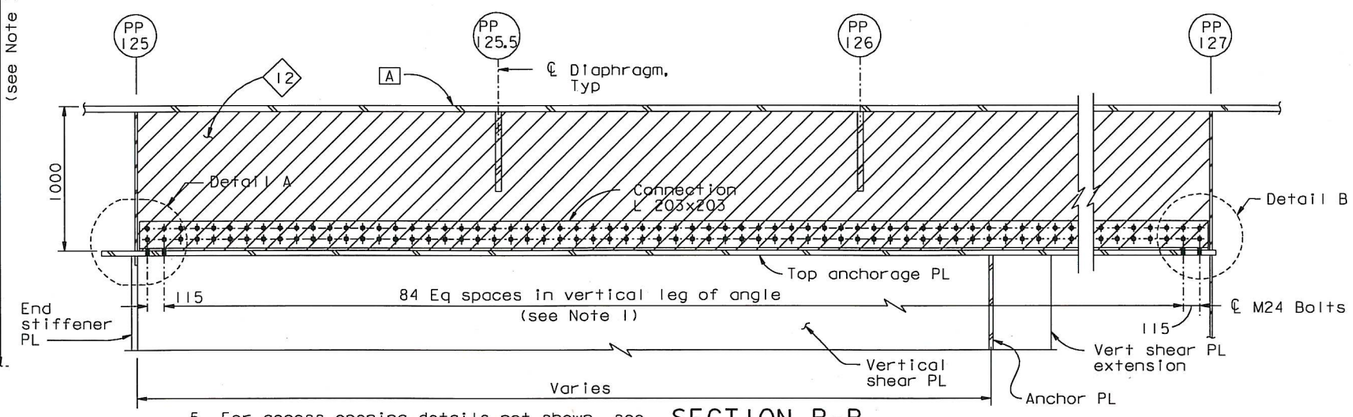

SECTION B-B

1:20

5. For access opening details not shown, see "Typical Girder Details No. 7" sheet.
6. For bulkhead, see "Hinge A Details" sheets.
7. For Details A, B, C, C' and D, see "Girder At East Transition No. 18" sheet.
8. Section Y-Y shall apply as required to provide 20 Min clearance to strand rod.
9. Top anchorage PL stiffener plates may be coped to provide additional clearance from strands, subject to review and approval of the Engineer.
10. At the Contractor's option, an equivalent built-up shape may be used, subject to review and approval of the Engineer.

NOTES:

1. For connection details of connection angleto top anchor PL, see "Girder At East Transition No. 18" sheet.
2. For connection of vertical PL to girder PL 1, see "Girder At East Transition Details No. 3" sheet.
3. For 12 spacing, see "Girder At East Transition No. 6" sheet.
4. For details of top anchorage PL not shown, see "Crossbeam At East Anchorage" sheets.

REGISTERED PROFESSIONAL ENGINEER Marwan N. Nader No. C 054426 Exp. 12/31/13 CIVIL STATE OF CALIFORNIA

FOR REVISIONS ONLY

CONTRACT CHANGE ORDER NO. 87
SHEET 52 OF 115

REQUESTS FOR INFORMATION NOT ADDRESSED IN THIS CCO REMAIN IN FORCE

ALL DIMENSIONS ARE IN MILLIMETERS UNLESS OTHERWISE SHOWN

R. Valizadeh/V. Toan/Y.L./W.L./F.C.
DESIGN OVERSIGHT
Roya Valizadeh / Vong Toan / Y Liu
SIGN OFF DATE 04/18/12

MARK	DATE	DESCRIPTIONS	BY	CH'D	CCO#
1	04/18/12	EAST END OBG	MN	GB	87

REVISIONS

	BY	CHECKED
DESIGN	G. Baker	P. Ritchie
DETAILS	M. Gulyas	T. McMeans
QUANTITIES	G. Baker	M. Roberts

PREPARED FOR THE STATE OF CALIFORNIA DEPARTMENT OF TRANSPORTATION

R. Manzanarez
PROJECT ENGINEER

BRIDGE NO. 34-0006L/R
KILOMETER POST 13.2/13.9

SAN FRANCISCO OAKLAND BAY BRIDGE
EAST SPAN SEISMIC SAFETY PROJECT
SELF-ANCHORED SUSPENSION BRIDGE
(SUPERSTRUCTURE & TOWER)

GIRDER AT EAST TRANSITION NO. 17

Rev. Date: 5-18-98

ORIGINAL SCALE IN MILLIMETERS FOR REDUCED PLANS 0 10 20 30 40 50 60 70 80 90 100

CU 04
EA 0120F1

DISREGARD PRINTS BEARING EARLIER REVISION DATES

REVISION DATES (PRELIMINARY STAGE ONLY) 01/05/99 05/13/99 08/02/99 05/31/01 04/08/02 07/08/02 12/19/02

SHEET 282R1 OF

FILE => L:\BB\04-01200I\SAS\Contract Plans and CCO\CCO\CCO#87\temp\agandll.dgn

100 % PS&E

USERNAME => DWinrow DATE PLOTTED => 18 APR 2012 TIME PLOTTED => 11:15:37

DIST.	COUNTY	ROUTE	KILOMETER POST TOTAL PROJECT	SHEET NO.	TOTAL SHEETS
04	SF	80	13.2/13.9	699S	1204

REGISTERED ENGINEER - CIVIL

04-18-12

PLANS APPROVAL DATE

REGISTERED PROFESSIONAL ENGINEER Marwan N. Nader No. C 054426 Exp. 12/31/13 CIVIL STATE OF CALIFORNIA

The State of California or its officers or agents shall not be responsible for the accuracy or completeness of electronic copies of this plan sheet.

T.Y. LIN / MOFFATT & NICHOL
825 BATTERY STREET
SAN FRANCISCO, CA 94111

Caltrans now has a web site! To get to the web site, go to: http://www.dot.ca.gov

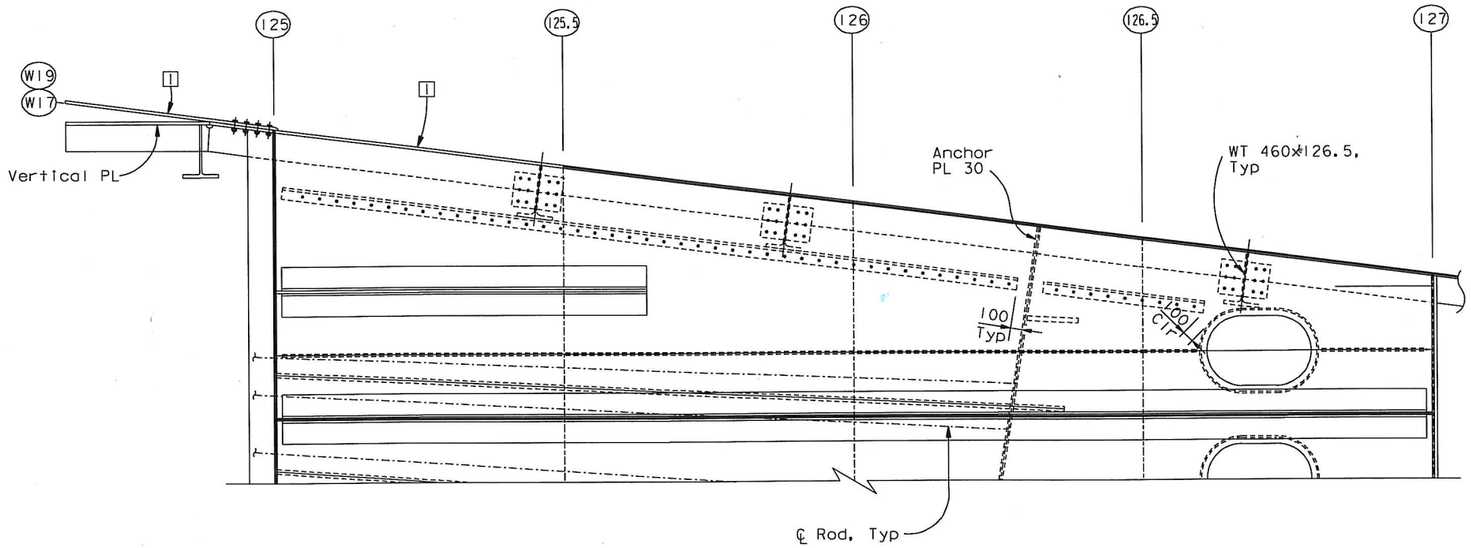

PARTIAL PLAN - TOP ANCHORAGE PLATE (1000 mm below deck)

1:25

CONTRACT CHANGE ORDER NO. 87
SHEET 53 OF 115

REQUESTS FOR INFORMATION NOT ADDRESSED IN THIS CCO REMAIN IN FORCE

ALL DIMENSIONS ARE IN MILLIMETERS UNLESS OTHERWISE SHOWN

R. Valizadeh/V. Toan/Y.L./W.L./F.C.
DESIGN OVERSIGHT
SIGN OFF DATE 04/18/12

MARK	DATE	DESCRIPTIONS	BY	CH'D	CCO#
0	04/18/12	EAST END OBG	GB	MN	87

REVISIONS

DESIGN	BY G. Baker	CHECKED	M. Nader
DETAILS	BY G. Baker	CHECKED	D. Turner
QUANTITIES	BY G. Baker	CHECKED	D. Turner

PREPARED FOR THE STATE OF CALIFORNIA DEPARTMENT OF TRANSPORTATION

R. Manzanarez
PROJECT ENGINEER

BRIDGE NO. 34-0006L/R
KILOMETER POST 13.2/13.9

SAN FRANCISCO OAKLAND BAY BRIDGE
EAST SPAN SEISMIC SAFETY PROJECT
SELF-ANCHORED SUSPENSION BRIDGE
(SUPERSTRUCTURE & TOWER)

GIRDER AT EAST TRANSITION NO. 17A

Rev. Date: 5-18-98

ORIGINAL SCALE IN MILLIMETERS FOR REDUCED PLANS 0 10 20 30 40 50 60 70 80 90 100

CU 04
EA 0120F1

DISREGARD PRINTS BEARING EARLIER REVISION DATES

REVISION DATES (PRELIMINARY STAGE ONLY) 04/18/12

SHEET 282S1 OF

FILE => I:\bb\04-012001\sas\contract plans and cco\cco\cco#87\temp\agandlla.dgn

100 % PS&E

USERNAME => DWinrow DATE PLOTTED => 18 APR 2012 TIME PLOTTED => 11:16:49

DIST.	COUNTY	ROUTE	KILOMETER POST TOTAL PROJECT	SHEET NO.	TOTAL SHEETS
04	SF	80	13.2/13.9	700R1	1204

George Baker
REGISTERED ENGINEER - CIVIL
12-6-04
PLANS APPROVAL DATE

REGISTERED PROFESSIONAL ENGINEER George S. Baker No. C 57112 Exp. 12/31/05 CIVIL STATE OF CALIFORNIA

The State of California or its officers or agents shall not be responsible for the accuracy or completeness of electronic copies of this plan sheet.

T.Y. LIN / MOFFATT & NICHOL
825 BATTERY STREET
SAN FRANCISCO, CA 94111

Caltrans now has a web site! To get to the web site, go to: http://www.dot.ca.gov

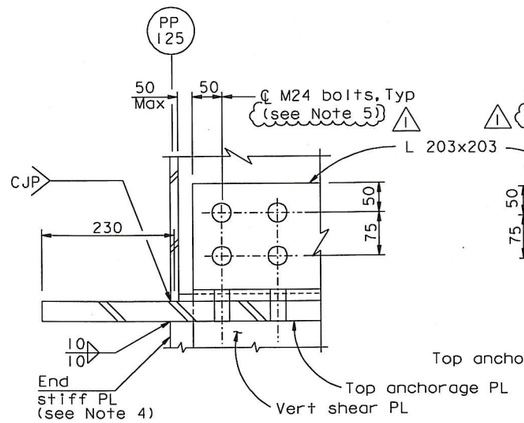

DETAIL A
1:5

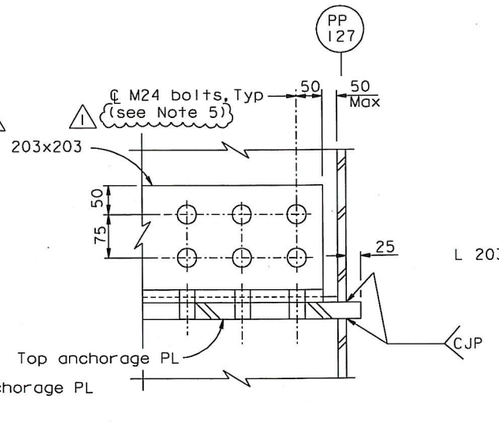

DETAIL B
1:5

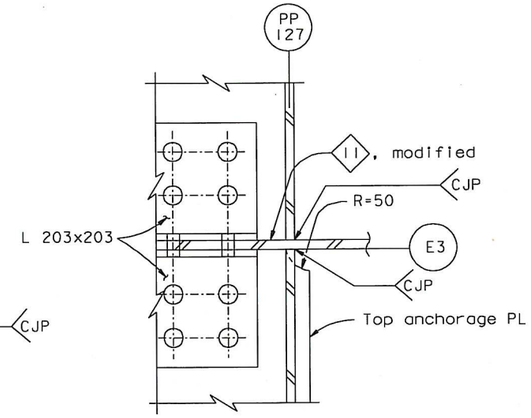

DETAIL C (Detail C' similar)
1:5

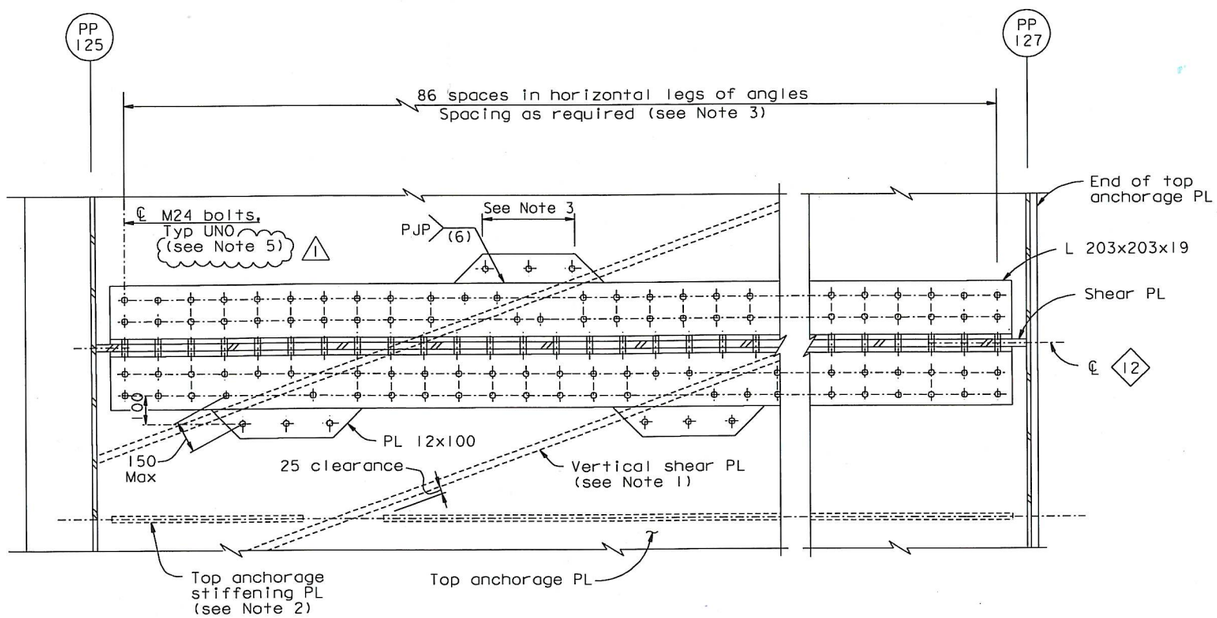

DETAIL D
1:10

LEGEND:

⊕ High strength bolt

NOTES:

1. For details of vertical shear PL in east anchorage, see "East Cable Anchorage "E" Line Layout" and "East Cable Anchorage "W" Line Layout" sheets.
2. For spacing of top anchorage stiffening plates, see "Girder At East Transition No. 5" and "Girder At East Transition No. 6" sheets.
3. At each vertical shear PL, the bolt spaces in the L203 connection angles shall be detailed according to the Bolt Dimension Table on "Typical Girder Details No. 1" sheet. Where the vertical shear PL interferes with placement of the indicated number of bolts, or the permissible maximum bolt spacing, then an outrigger PL shall be used as shown in Detail D. The length and placement of the outrigger shall be sufficient to seal the connection angle and to accommodate the displaced number of bolts.
4. For end stiffener PL, see "East Cable Anchorage "E" line Layout No. 2" sheet.
5. (1) Oversize holes are acceptable for both the vertical and horizontal legs of the L 203x203x19 and the top anchor PL.

REGISTERED PROFESSIONAL ENGINEER Marwan N. Nader No. C 054426 Exp. 12/31/11 CIVIL STATE OF CALIFORNIA

FOR REVISIONS ONLY

CONTRACT CHANGE ORDER NO. 87
SHEET 54 OF 115

REQUESTS FOR INFORMATION NOT ADDRESSED IN THIS CCO REMAIN IN FORCE

ALL DIMENSIONS ARE IN MILLIMETERS UNLESS OTHERWISE SHOWN

R. Vallzadeh/V. Toan/Y. L./W. L./F. C.
DESIGN OVERSIGHT
SIGN OFF DATE 09/01/11

MARK	DATE	DESCRIPTIONS	BY	CH'D	CCO#
1	09/01/11	EAST END OBG	GB	MN	87

REVISIONS

DESIGN	BY G. Baker	CHECKED P. Ritchie	
DETAILS	BY S. Camo	CHECKED T. McMeans	
QUANTITIES	BY G. Baker	CHECKED M. Roberts	

PREPARED FOR THE STATE OF CALIFORNIA DEPARTMENT OF TRANSPORTATION

R. Manzanarez
PROJECT ENGINEER

BRIDGE NO. 34-0006L/R
KILOMETER POST 13.2/13.9

SAN FRANCISCO OAKLAND BAY BRIDGE
EAST SPAN SEISMIC SAFETY PROJECT
SELF-ANCHORED SUSPENSION BRIDGE
(SUPERSTRUCTURE & TOWER)

GIRDER AT EAST TRANSITION NO. 18

Rev. Date: 5-18-98

ORIGINAL SCALE IN MILLIMETERS FOR REDUCED PLANS 0 10 20 30 40 50 60 70 80 90 100

CU 04
EA 0120F1

DISREGARD PRINTS BEARING EARLIER REVISION DATES

REVISION DATES (PRELIMINARY STAGE ONLY) 05/15/95 08/22/95 05/31/01 01/08/02 01/01/02 12/13/02 11/13/05

SHEET 283R1 OF

FILE => I:\bb\04-0120F1\sas\contract plans and cco\cco\cco#87\1-original 09-01-11\dgn\agand12.dgn

100 % PS&E

DATE PLOTTED => 30 AUG 2011 TIME PLOTTED => 09:42:47

USERNAME => PTom

DIST.	COUNTY	ROUTE	KILOMETER POST TOTAL PROJECT	SHEET NO.	TOTAL SHEETS
04	SF	80	13.2/13.9	701R1	1204

Caltrans Metric

George Baker
REGISTERED ENGINEER - CIVIL
12-6-04
PLANS APPROVAL DATE

REGISTERED PROFESSIONAL ENGINEER George S. Baker No. C57112 Exp. 12/31/05 CIVIL STATE OF CALIFORNIA

The State of California or its officers or agents shall not be responsible for the accuracy or completeness of electronic copies of this plan sheet.

T.Y. LIN / MOFFATT & NICHOL
825 BATTERY STREET
SAN FRANCISCO, CA 94111

Caltrans now has a web site! To get to the web site, go to: http://www.dot.ca.gov

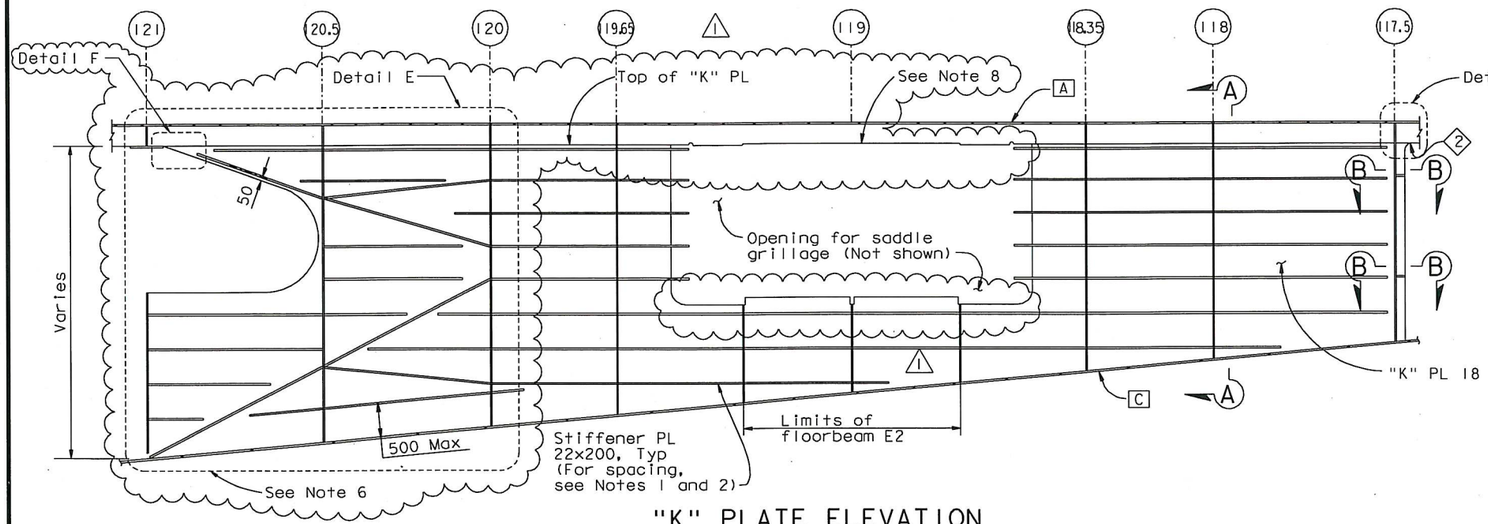

"K" PLATE ELEVATION
1:40

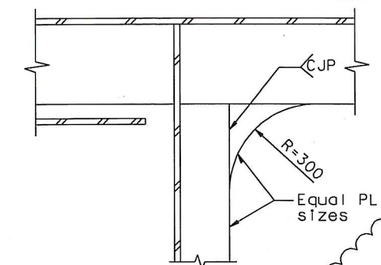

DETAIL D
1:10

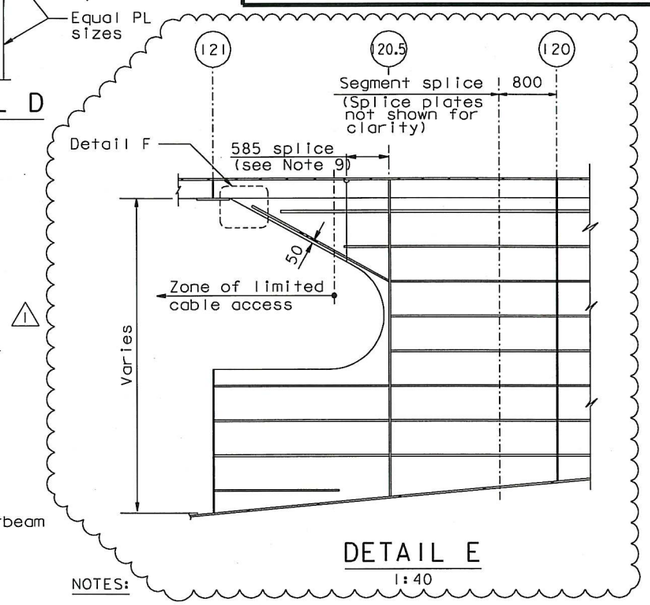

DETAIL E
1:40

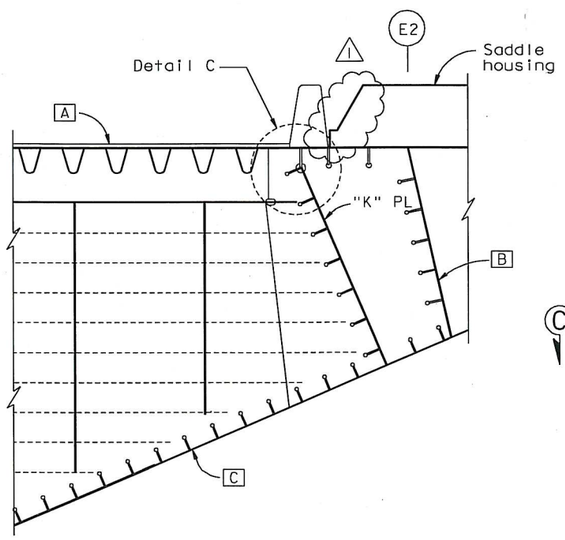

SECTION A-A (Eastbound shown, Westbound similar)
1:40

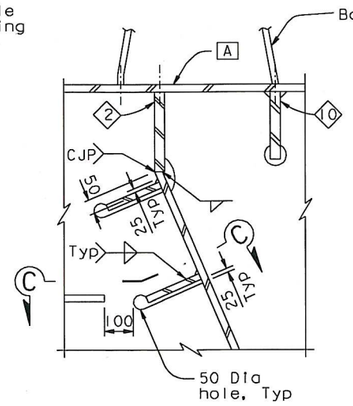

DETAIL C
1:10

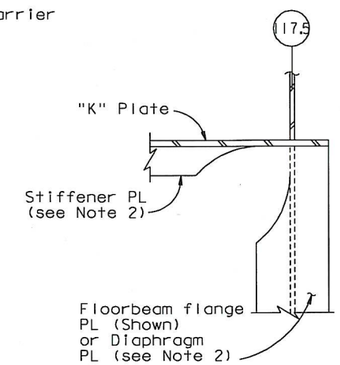

SECTION B-B
1:10

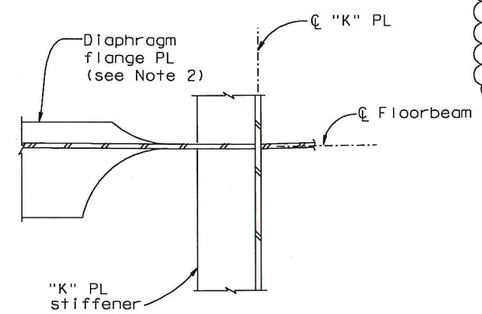

SECTION C-C
1:10

NOTES:

1. Spacing of "K" PL stiffeners shall match spacing of saddle grillage PL A, unless noted otherwise. For details, see "Girder At Pier E2 No.5" sheet.
2. For transition and termination of stiffeners and other plates, see "Typical Girder Details No.16" sheets.
3. For "K" PL location, see "Girder At East Transition No.2" and "Girder At East Transition No.4" sheets.
4. For "Girder at East Transition Details" sheets, all bolts shall be detailed according to the Bolt Dimension Table. See "Typical Girder Details No. 1" sheet. All bolts are HS UNO.
5. For "Girder at East Transition Details" sheets, UNO all fillet welds shall be 6 mm for plate sizes not greater than 20 mm. For plate sizes greater than 20 mm, fillet welds shall be 8 mm UNO.
6. For alternative stiffener layout, see Detail E.
7. For Detail F, see "Section Z-Z" on "Floorbeam At East Transition Details No.3" sheet.
8. Trim or extend (2) stiffener to meet top grillage PL A based on final cable geometry.
9. The Contractor shall check the splice location welding access in area of cable.

Daniel J. Turner
REGISTERED PROFESSIONAL ENGINEER Daniel J. Turner No. C 65033 Exp. 06/30/13 CIVIL STATE OF CALIFORNIA

FOR REVISIONS ONLY

CONTRACT CHANGE ORDER NO. 87
SHEET 55 OF 115

REQUESTS FOR INFORMATION NOT ADDRESSED IN THIS CCO REMAIN IN FORCE

ALL DIMENSIONS ARE IN MILLIMETERS UNLESS OTHERWISE SHOWN

MARK	DATE	DESCRIPTIONS	BY	CH'D	CCO#
1	09/01/11	EAST END OBG	DT	GB	87

REVISIONS

R. Valizadeh/V. Toan/Y.L./W.L./F.C.
DESIGN OVERSIGHT
Ryan Valizadeh / Vong Toan / Y Liu
SIGN OFF DATE 09/01/11

Rev. Date: 5-18-98

DESIGN BY G. Baker CHECKED P. Ritchie
DETAILS BY D. Veytsman CHECKED T. McMeans
QUANTITIES BY G. Baker CHECKED M. Roberts

PREPARED FOR THE STATE OF CALIFORNIA DEPARTMENT OF TRANSPORTATION

R. Manzanarez
PROJECT ENGINEER

CU 04
EA 0120F1

BRIDGE NO. 34-0006L/R
KILOMETER POST 13.2/13.9

DISREGARD PRINTS BEARING EARLIER REVISION DATES → 08/28/99 03/27/01 04/26/02 07/29/02 12/19/02

ORIGINAL SCALE IN MILLIMETERS FOR REDUCED PLANS 0 10 20 30 40 50 60 70 80 90 100

SAN FRANCISCO OAKLAND BAY BRIDGE
EAST SPAN SEISMIC SAFETY PROJECT
SELF-ANCHORED SUSPENSION BRIDGE
(SUPERSTRUCTURE & TOWER)

GIRDER AT EAST TRANSITION DETAILS NO. 1

SHEET 284R1 OF

FILE => I:\bb\04-0120F1\sas\contract plans and cco\cco\cco#87\1-original 09-01-11\dgn\agand13.dgn

USERNAME => PToan DATE PLOTTED => 30 AUG 2011 TIME PLOTTED => 09:45:50

100% PS&E

DIST.	COUNTY	ROUTE	KILOMETER POST TOTAL PROJECT	SHEET NO.	TOTAL SHEETS
04	SF	80	13.2/13.9	702R1	1204

George Baker
REGISTERED ENGINEER - CIVIL
12-6-04
PLANS APPROVAL DATE

REGISTERED PROFESSIONAL ENGINEER George S. Baker No. C57112 Exp. 12/31/05 CIVIL STATE OF CALIFORNIA

The State of California or its officers or agents shall not be responsible for the accuracy or completeness of electronic copies of this plan sheet.

T.Y. LIN / MOFFATT & NICHOL
825 BATTERY STREET
SAN FRANCISCO, CA 94111

Caltrans now has a web site! To get to the web site, go to: http://www.dot.ca.gov

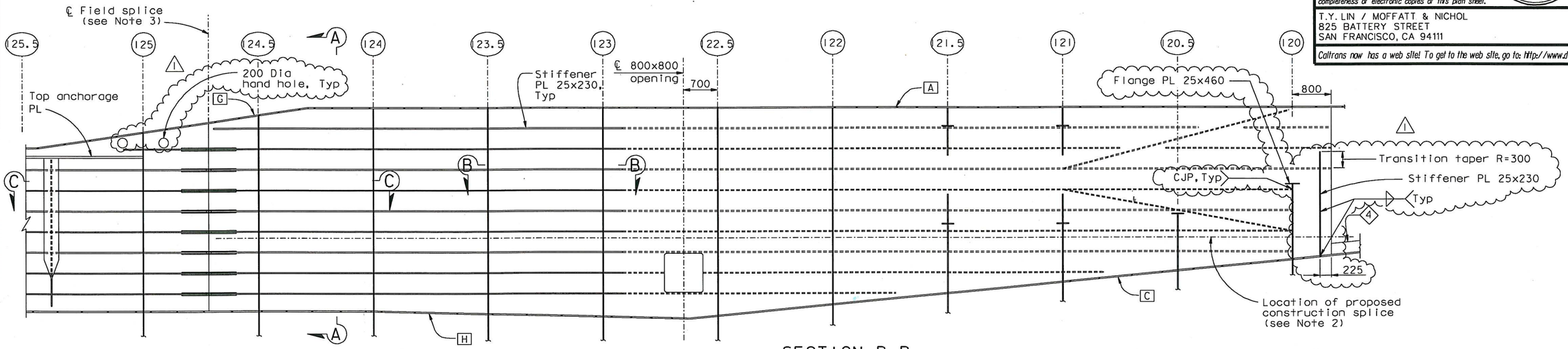

SECTION B-B

1:20

"E" Line girder shown
"W" Line girder similar & opposite hand (See Note 1)

VERTICAL PLATE ELEVATION

1:40

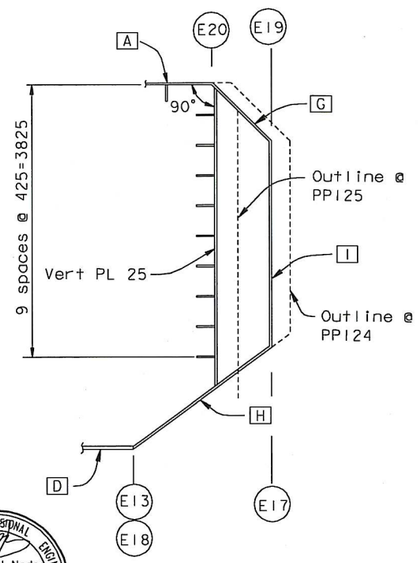

SECTION A-A

1:40

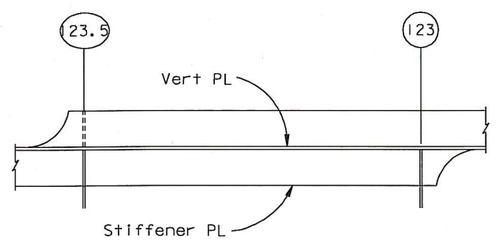

STIFFENER TRANSITION

SECTION B-B

1:20

NOTES:

1. Vertical PL is perpendicular to girder face A. For location, see "Girder At East Transition No. 2" and "Girder At East Transition No. 4" sheets.
2. For construction splice details not shown, see "East Anchorage Construction Details" sheets
3. For field splice details and for Section C-C, see "Girder At East Transition Details No. 3" sheet.

ALL DIMENSIONS ARE IN MILLIMETERS UNLESS OTHERWISE SHOWN

REGISTERED PROFESSIONAL ENGINEER Marwan N. Nader No. C 054426 Exp. 12/31/13 CIVIL STATE OF CALIFORNIA

FOR REVISIONS ONLY

CONTRACT CHANGE ORDER NO. 87
SHEET 56 OF 115

REQUESTS FOR INFORMATION NOT ADDRESSED IN THIS CCO REMAIN IN FORCE

R. Valizadeh/V. Toan/Y.L./W.L./F.C.
DESIGN OVERSIGHT
Roya Valizadeh / Vang Toan / Y Liu
SIGN OFF DATE 04/18/12

MARK	DATE	DESCRIPTIONS	BY	CH'D	CCO#
1	04/18/12	EAST END OBG	MN	GB	87

REVISIONS

DESIGN	BY G. Baker	CHECKED P. Ritchie	
DETAILS	BY M. Gulyas	CHECKED T. McMeans	
QUANTITIES	BY G. Baker	CHECKED M. Roberts	

PREPARED FOR THE STATE OF CALIFORNIA DEPARTMENT OF TRANSPORTATION

R. Manzanarez
PROJECT ENGINEER

BRIDGE NO. 34-0006L/R
KILOMETER POST 12.6/13.9

SAN FRANCISCO OAKLAND BAY BRIDGE
EAST SPAN SEISMIC SAFETY PROJECT
SELF-ANCHORED SUSPENSION BRIDGE
(SUPERSTRUCTURE & TOWER)

GIRDER AT EAST TRANSITION DETAILS NO. 2

Rev. Date: 5-18-98

ORIGINAL SCALE IN MILLIMETERS FOR REDUCED PLANS 0 10 20 30 40 50 60 70 80 90 100

CU 04
EA 012061

DISREGARD PRINTS BEARING EARLIER REVISION DATES → 06/02/99 05/31/01 04/08/02 07/09/02 12/19/02

SHEET 285R1 OF

FILE => I:\bb\04-012001\sas\contract plans and cco\cco\cco#87\temp\agand14.dgn

100 % PS&E

USERNAME => DWinrow DATE PLOTTED => 18 APR 2012 TIME PLOTTED => 11:17:58

DIST.	COUNTY	ROUTE	KILOMETER POST TOTAL PROJECT	SHEET NO.	TOTAL SHEETS
04	SF	80	13.2/13.9	703R2	1204

George Baker
REGISTERED ENGINEER - CIVIL
12-6-04
PLANS APPROVAL DATE
REGISTERED PROFESSIONAL ENGINEER George S. Baker No. C57112 Exp. 12/31/05 CIVIL STATE OF CALIFORNIA

The State of California or its officers or agents shall not be responsible for the accuracy or completeness of electronic copies of this plan sheet.

T.Y. LIN / MOFFATT & NICHOL
825 BATTERY STREET
SAN FRANCISCO, CA 94111

Caltrans now has a web site! To get to the web site, go to: http://www.dot.ca.gov

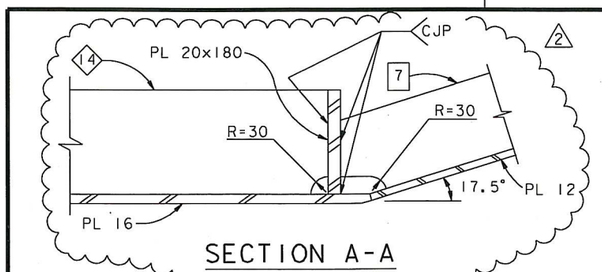

SECTION A-A
NTS

9. At the Contractor's option, ASTM A992 or ASTM A572 Gr 345 may be used in lieu of ASTM A709 for rib splice angles for Types 5 & 7 stiffeners.

10. At the Contractor's option, an equivalent built-up shape may be used, subject to review and approval of the Engineer.

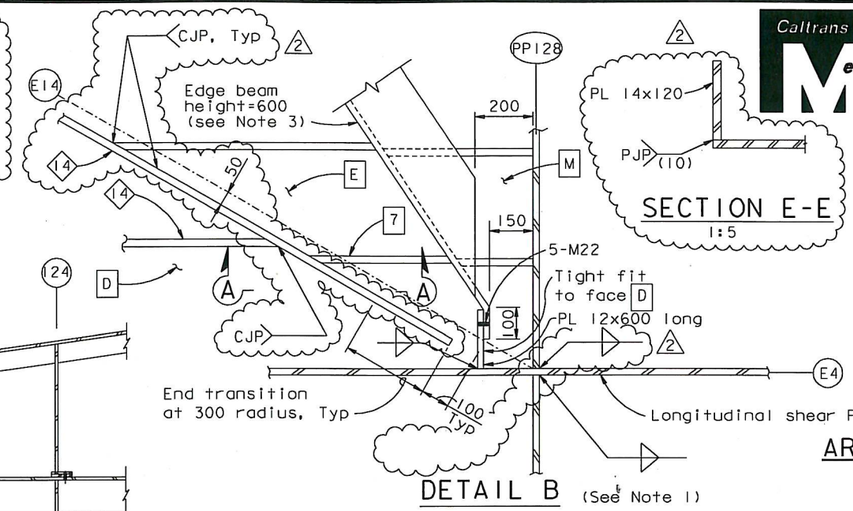

SECTION E-E
1:5

DETAIL B (See Note 1)
NTS

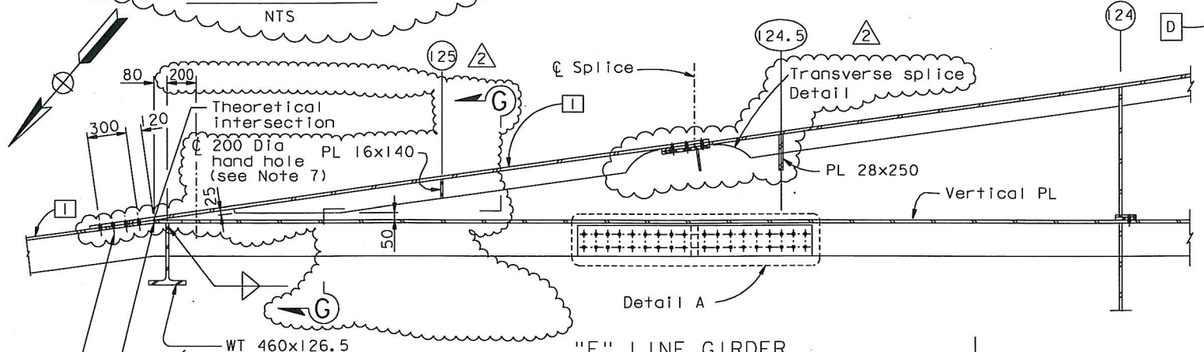

"E" LINE GIRDER
SECTION C-C
1:20

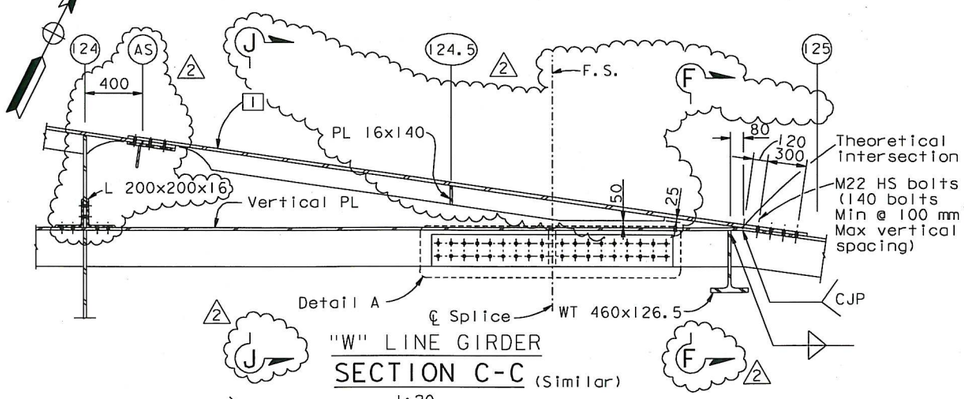

"W" LINE GIRDER
SECTION C-C (Similar)
1:20

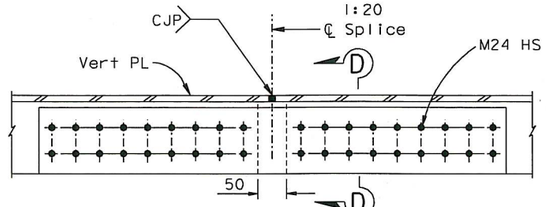

DETAIL A
1:10

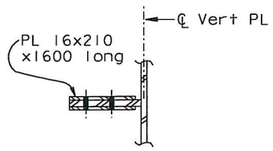

SECTION D-D
1:10

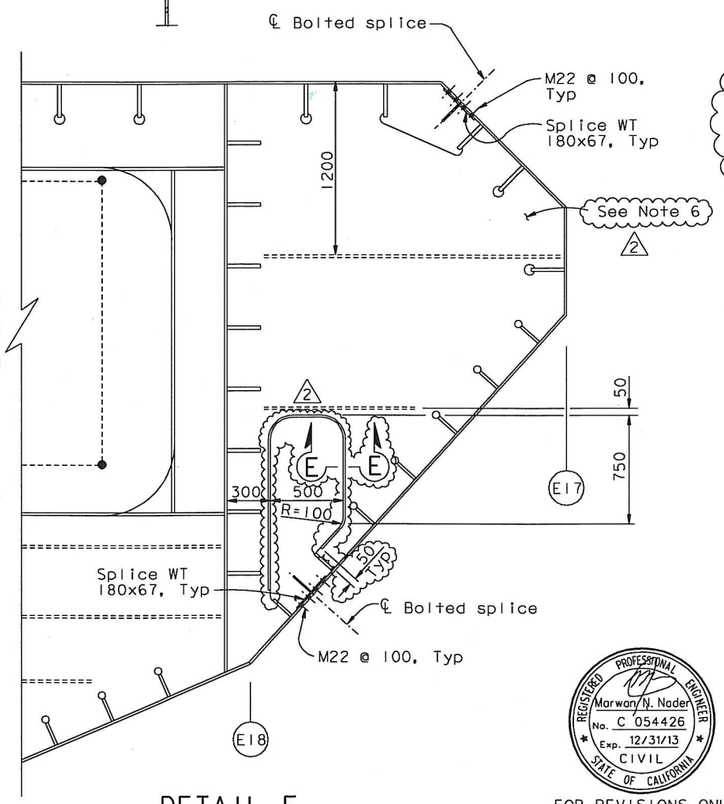

DETAIL E
ARCHITECTURAL PLATE SPLICES
1:20

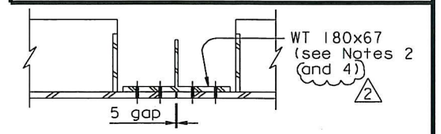

ARCHITECTURAL SPLICE DETAIL
1:10

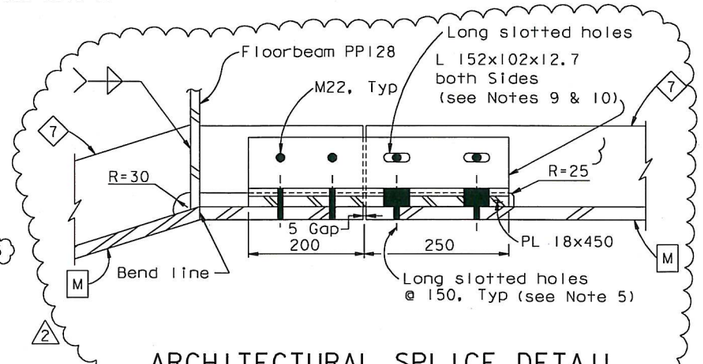

ARCHITECTURAL SPLICE DETAIL
AT PP128
1:5

NOTES:

1. Detail B shown at E4; W4 similar. For location of Detail B, see Detail A on "Girder At East Transition No.14" sheet.
2. Bolt holes in architectural splice plates shall be long slotted in the longitudinal direction of the bridge.
3. Edge beam shall have same dimensions and details as longitudinal shear PL Type I UNO. See "Typical Girder Details No.8" and "Typical Floorbeam Details No.5" sheets.
4. WT 180x67 A709 Grade 345 may be substituted with grade A992 rolled shape of equivalent imperial size, subject to review and approval of the Engineer.
5. The long slots shall be in the longitudinal direction of the Bridge. The outer shim PL shall not be slotted.
6. For optional splice details, see "East Anchorage Details" sheets.
7. Handhole centered 150 above girder face H.
8. For Sections F-F, G-G and J-J, see "Girder East Transition Details No.3A" sheet.

REGISTERED PROFESSIONAL ENGINEER Marwan N. Nader No. C 054426 Exp. 12/31/13 CIVIL STATE OF CALIFORNIA

FOR REVISIONS ONLY

ALL DIMENSIONS ARE IN MILLIMETERS UNLESS OTHERWISE SHOWN

CONTRACT CHANGE ORDER NO. 87
SHEET 57 OF 115

REQUESTS FOR INFORMATION NOT ADDRESSED IN THIS CCO REMAIN IN FORCE

R. Valizadeh/V. Toan/Y.L./W.L./F.C.
DESIGN OVERSIGHT
Roya Valizadeh / Vong Toan / Y Liu
SIGN OFF DATE 04/18/12

MARK	DATE	DESCRIPTIONS	BY	CH'D	CCO#
2	04/18/12	EAST END OBG	MN	GB	87
1	11/05/10	PP119 ACCESS & PP125 PLATES	GB	DT	86

REVISIONS

DESIGN	BY	G. Baker	CHECKED	P. Ritchie
DETAILS	BY	D. Veytsman	CHECKED	T. McMeans
QUANTITIES	BY	G. Baker	CHECKED	M. Roberts

PREPARED FOR THE STATE OF CALIFORNIA DEPARTMENT OF TRANSPORTATION

R. Manzanarez
PROJECT ENGINEER

BRIDGE NO. 34-0006L/R
KILOMETER POST 13.2/13.9

SAN FRANCISCO OAKLAND BAY BRIDGE
EAST SPAN SEISMIC SAFETY PROJECT
SELF-ANCHORED SUSPENSION BRIDGE
(SUPERSTRUCTURE & TOWER)

GIRDER AT EAST TRANSITION DETAILS NO. 3

Rev. Date: 5-18-98

ORIGINAL SCALE IN MILLIMETERS FOR REDUCED PLANS 0 10 20 30 40 50 60 70 80 90 100

CU 04
EA 0120F1

DISREGARD PRINTS BEARING EARLIER REVISION DATES

REVISION DATES (PRELIMINARY STAGE ONLY) 08/02/99 05/31/01 01/08/02 07/01/02 12/19/02

SHEET 286R2 OF

FILE => I:\bb\04-01200I\sas\contract plans and cco\cco\cco#87\temp\agand16.dgn

USERNAME => DWInrow DATE PLOTTED => 18 APR 2012 TIME PLOTTED => 11:18:47

100 % PS&E

DIST.	COUNTY	ROUTE	KILOMETER POST TOTAL PROJECT	SHEET NO.	TOTAL SHEETS
04	SF	80	13.2/13.9	703S1	1204

REGISTERED ENGINEER - CIVIL

09/01/11

PLANS APPROVAL DATE

REGISTERED PROFESSIONAL ENGINEER Marwan N. Nader No. C 054426 Exp. 12/31/11 CIVIL STATE OF CALIFORNIA

The State of California or its officers or agents shall not be responsible for the accuracy or completeness of electronic copies of this plan sheet.

T.Y. LIN / MOFFATT & NICHOL
825 BATTERY STREET
SAN FRANCISCO, CA 94111

Caltrans now has a web site! To get to the web site, go to: http://www.dot.ca.gov

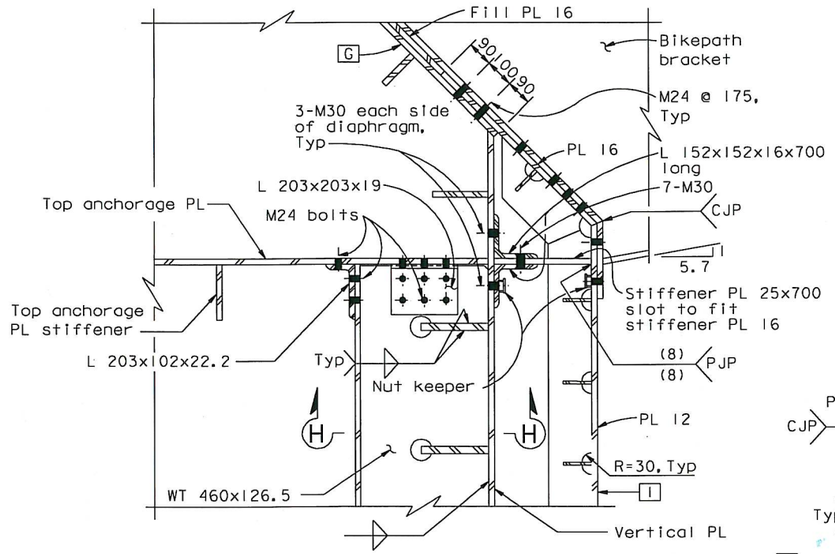

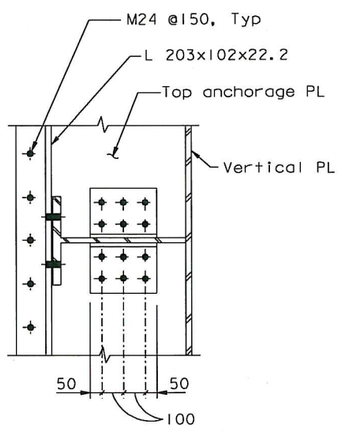

SECTION H-H (See Note 1)
1:10

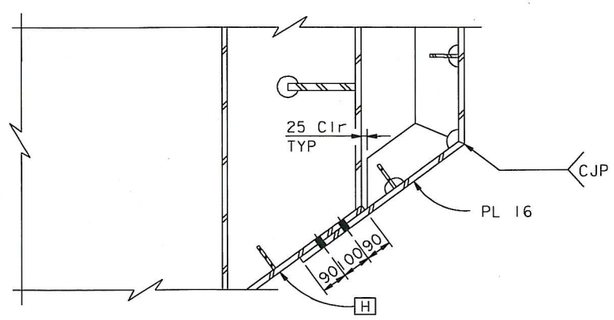

SECTION G-G
1:10

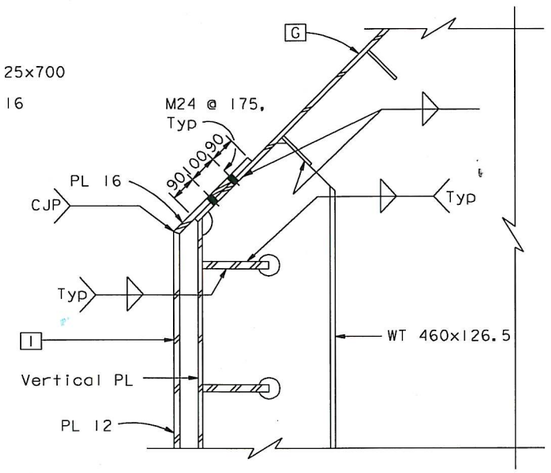

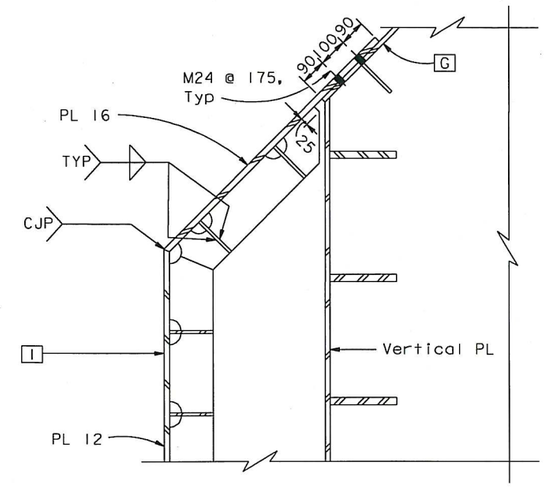

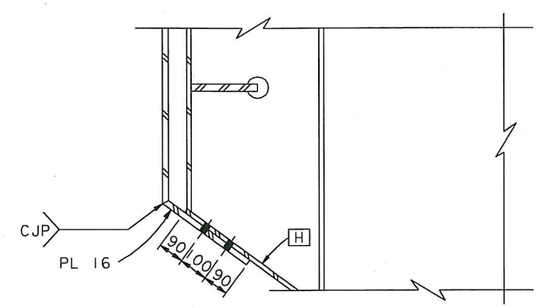

SECTION F-F
1:10

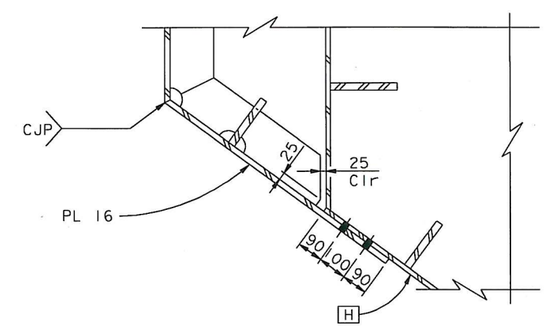

SECTION J-J
1:10

NOTES:

1. Section H-H applies at all WT connections to top anchorage PL "E" Line and "W" Line.

CONTRACT CHANGE ORDER NO. 87
SHEET 58 OF 115

REQUESTS FOR INFORMATION NOT ADDRESSED IN THIS CCO REMAIN IN FORCE

ALL DIMENSIONS ARE IN MILLIMETERS UNLESS OTHERWISE SHOWN

R. Valizadeh/V. Toan/Y.L./W.L./F.C.
DESIGN OVERSIGHT
SIGN OFF DATE 09/01/11

MARK	DATE	DESCRIPTIONS	BY	CH'D	CCO#
0	09/01/11	EAST END OBG	GB	MN	87

REVISIONS

DESIGN	BY	G. Baker	CHECKED	M. Nader
DETAILS	BY	G. Baker	CHECKED	D. Turner
QUANTITIES	BY	G. Baker	CHECKED	D. Turner

PREPARED FOR THE STATE OF CALIFORNIA DEPARTMENT OF TRANSPORTATION

R. Manzanarez
PROJECT ENGINEER

BRIDGE NO. 34-0006L/R
KILOMETER POST 13.2/13.9

SAN FRANCISCO OAKLAND BAY BRIDGE
EAST SPAN SEISMIC SAFETY PROJECT
SELF-ANCHORED SUSPENSION BRIDGE
(SUPERSTRUCTURE & TOWER)

GIRDER AT EAST TRANSITION DETAILS NO. 3A

Rev. Date: 5-18-98

ORIGINAL SCALE IN MILLIMETERS FOR REDUCED PLANS 0 10 20 30 40 50 60 70 80 90 100

CU 04
EA 0120F1

DISREGARD PRINTS BEARING EARLIER REVISION DATES 09/01/11

REVISION DATES (PRELIMINARY STAGE ONLY)

SHEET 286S1 OF

FILE => I:\bb\04-0120F1\sas\contract plans and cco\cco\cco#87\1-original 09-01-11\dgn\agand16a.dgn

USERNAME => PTom DATE PLOTTED => 30 AUG 2011 TIME PLOTTED => 09:55:09

100 % PS&E

DIST.	COUNTY	ROUTE	KILOMETER POST TOTAL PROJECT	SHEET NO.	TOTAL SHEETS
04	SF	80	13.2/13.9	704R2	1204

Caltrans Metric

George Baker
REGISTERED ENGINEER - CIVIL
12-6-04
PLANS APPROVAL DATE

REGISTERED PROFESSIONAL ENGINEER George S. Baker No. C 57112 Exp. 12/31/05 CIVIL STATE OF CALIFORNIA

The State of California or its officers or agents shall not be responsible for the accuracy or completeness of electronic copies of this plan sheet.

T.Y. LIN / MOFFATT & NICHOL
825 BATTERY STREET
SAN FRANCISCO, CA 94111

Caltrans now has a web site! To get to the web site, go to: http://www.dot.ca.gov

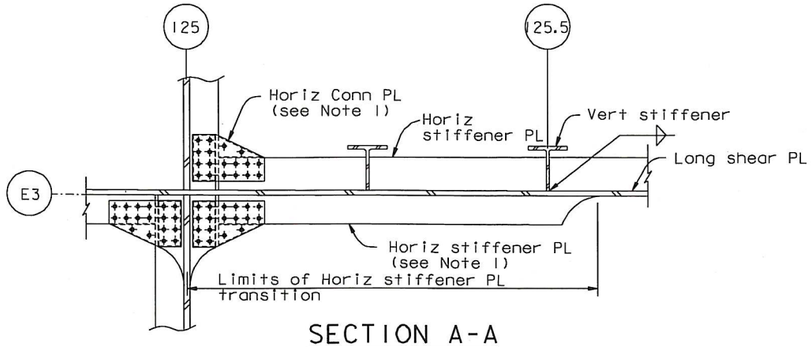

SECTION A-A
1:20

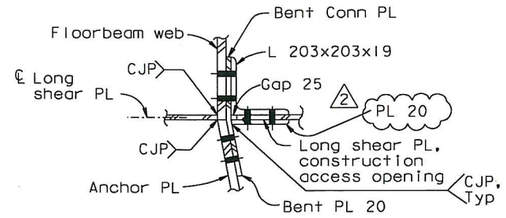

SECTION B-B (See Note 2) 2
1:10

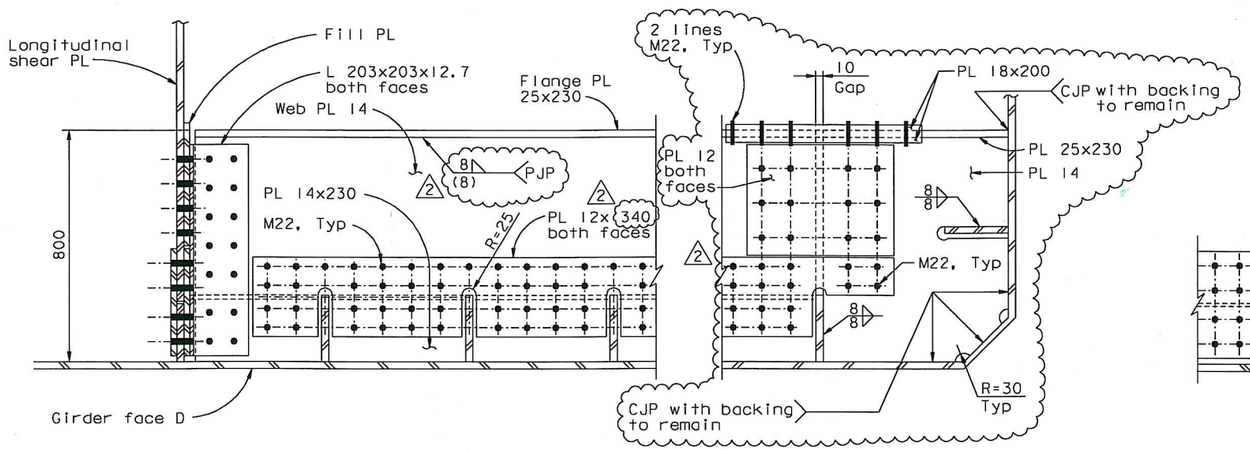

SECTION C-C
1:10

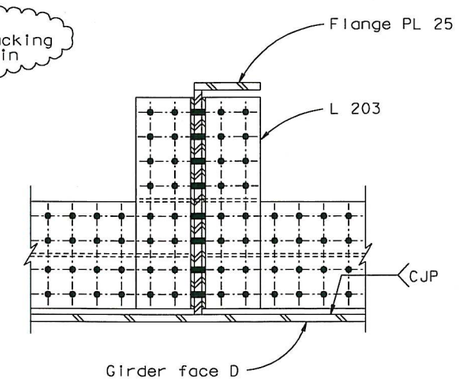

DETAIL D
1:10

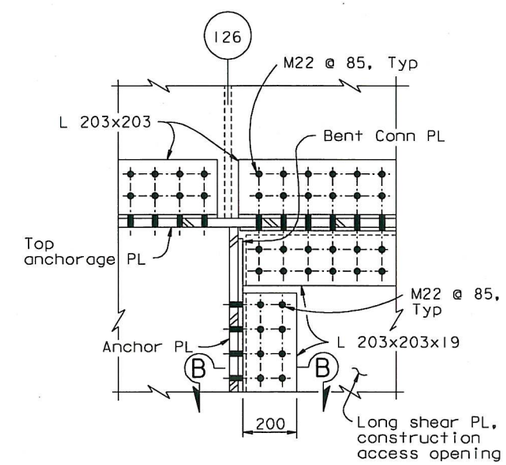

DETAIL E
1:10

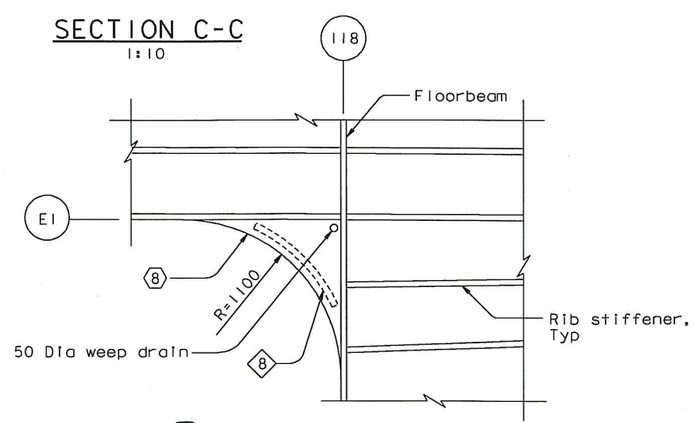

DETAIL F
1:20

NOTES:

1. For horizontal connection PL detail, see "Typical Girder Details No.9" sheet.
2. (2) At the Contractor's option, the bolted splice at the longitudinal shear plate construction access opening may be replaced with a CJP weld, subject to review and approval of the Engineer.

REGISTERED PROFESSIONAL ENGINEER Marwan N. Nader No. C 054426 Exp. 12/31/13 CIVIL STATE OF CALIFORNIA

FOR REVISIONS ONLY

CONTRACT CHANGE ORDER NO. 87
SHEET 59 OF 115

REQUESTS FOR INFORMATION NOT ADDRESSED IN THIS CCO REMAIN IN FORCE

ALL DIMENSIONS ARE IN MILLIMETERS UNLESS OTHERWISE SHOWN

100 % PS&E

MARK	DATE	DESCRIPTIONS	BY	CH'D	CCO#
2	04/18/12	EAST END OBG	MN	GB	87
1	07/31/09	LONGITUDINAL SHEAR PLATE	DT	GB	122

REVISIONS

R. Valizadeh/V. Toan/Y.L./W.L./F.C.
DESIGN OVERSIGHT
SIGN OFF DATE 04/18/12

	BY	CHECKED	
DESIGN	G. Baker	P. Ritchie	
DETAILS	D. Veytsman	T. McMeans	
QUANTITIES	G. Baker	M. Roberts	

PREPARED FOR THE STATE OF CALIFORNIA DEPARTMENT OF TRANSPORTATION

R. Manzanarez
PROJECT ENGINEER

BRIDGE NO. 34-0006L/R
KILOMETER POST 13.2/13.9

SAN FRANCISCO OAKLAND BAY BRIDGE
EAST SPAN SEISMIC SAFETY PROJECT
SELF-ANCHORED SUSPENSION BRIDGE
(SUPERSTRUCTURE & TOWER)

GIRDER AT EAST TRANSITION DETAILS NO. 4

Rev. Date: 5-18-98

ORIGINAL SCALE IN MILLIMETERS FOR REDUCED PLANS 0 10 20 30 40 50 60 70 80 90 100

CU 04
EA 0120F1

DISREGARD PRINTS BEARING EARLIER REVISION DATES 04/06/02 01/04/02 12/19/02

SHEET 287R2 OF

FILE => I:\bb\04-0120F1\sas\contract plans and cco\cco\cco#87\temp\agandl5.dgn

USERNAME => DWinrow DATE PLOTTED => 18 APR 2012 TIME PLOTTED => 11:19:49

DIST.	COUNTY	ROUTE	KILOMETER POST TOTAL PROJECT	SHEET NO.	TOTAL SHEETS
04	SF	80	13.2/13.9	704SIR1	1204

REGISTERED ENGINEER - CIVIL

04-09-10

PLANS APPROVAL DATE

REGISTERED PROFESSIONAL ENGINEER Marwan N. Nader No. C 054426 Exp. 12/31/11 CIVIL STATE OF CALIFORNIA

The State of California or its officers or agents shall not be responsible for the accuracy or completeness of electronic copies of this plan sheet.

T.Y. LIN / MOFFATT & NICHOL
825 BATTERY STREET
SAN FRANCISCO, CA 94111

Caltrans now has a web site! To get to the web site, go to: http://www.dot.ca.gov

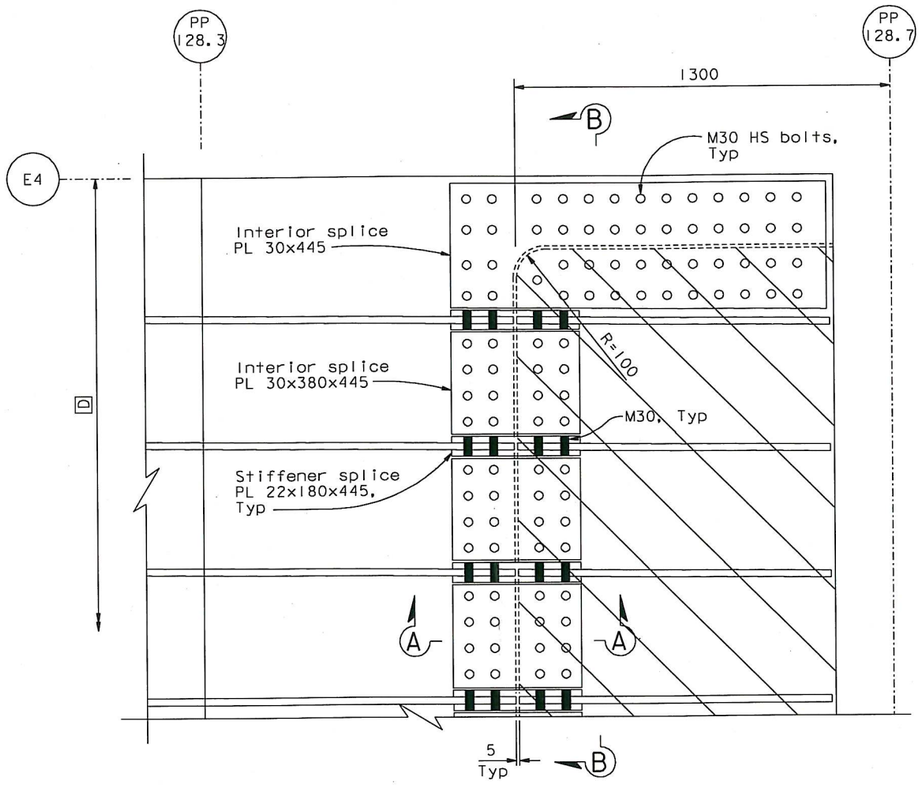

DETAIL C ("E" Line shown "W" Line similar)
1:10

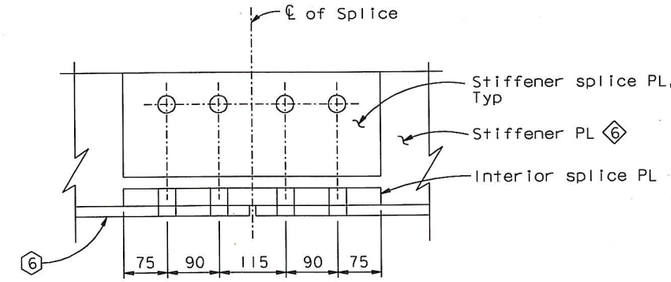

SECTION A-A
1:5

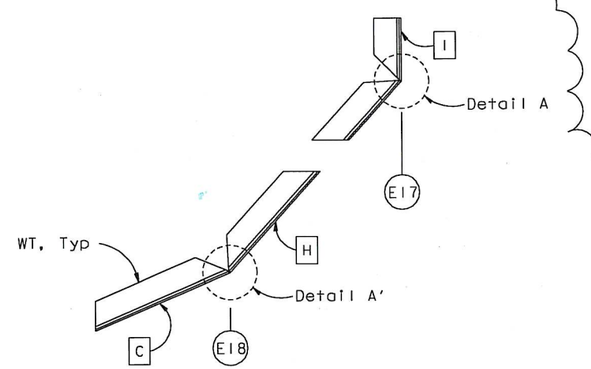

ARCHITECTURAL PLATE SPLICES AT CORNERS
1:20

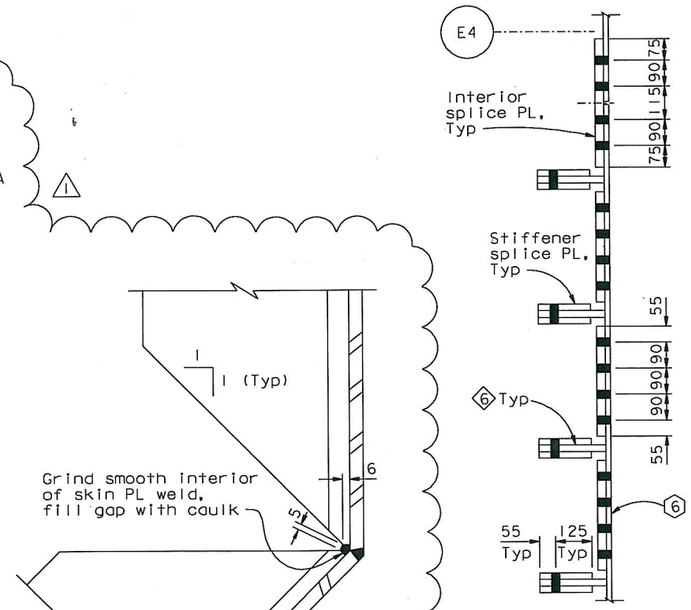

SECTION B-B
1:10

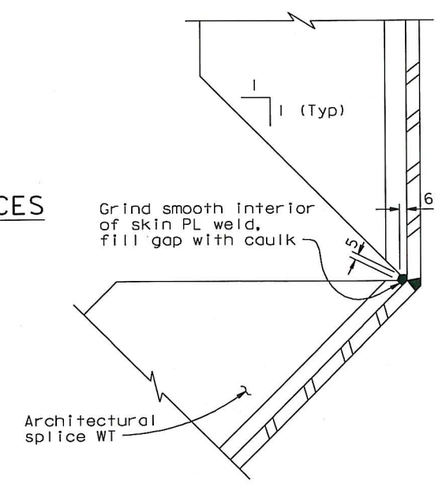

DETAIL A (Shown, Detail A' Similar)
1:2.5

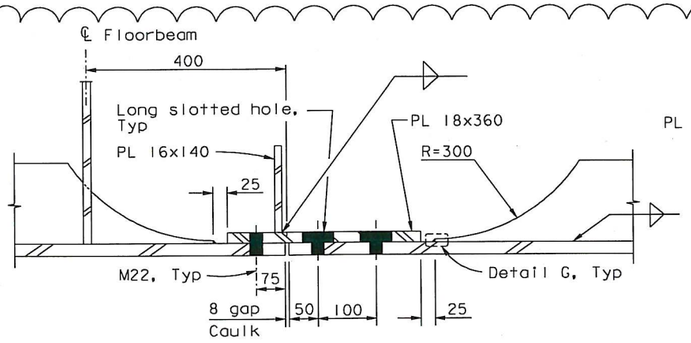

TRANSVERSE ARCHITECTURAL SPLICE DETAIL
1:5

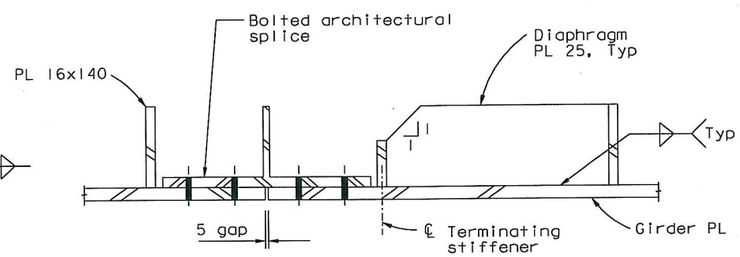

TERMINATING STIFFENER AT ARCHITECTURAL SPLICE DETAIL
1:5

LEGEND:
Indicates Field Installed Panel

CONTRACT CHANGE ORDER NO. 87
SHEET 60 OF 115

REQUESTS FOR INFORMATION NOT ADDRESSED IN THIS CCO REMAIN IN FORCE

ALL DIMENSIONS ARE IN MILLIMETERS UNLESS OTHERWISE SHOWN

R. Valizadeh/V. Toan/Y.L./W.L./F.C.
DESIGN OVERSIGHT
SIGN OFF DATE 09/01/11

MARK	DATE	DESCRIPTIONS	BY	CH'D	CCO#
1	09/01/11	EAST END OBG	DT	MN	87
0	04/09/10	HINGE A MODIFICATIONS	SS	MN	120

REVISIONS

DESIGN	BY S. Shi	CHECKED M. Nader	
DETAILS	BY S. Shi	CHECKED M. Nader	
QUANTITIES	BY S. Shi	CHECKED M. Nader	

PREPARED FOR THE STATE OF CALIFORNIA DEPARTMENT OF TRANSPORTATION

R. Manzanarez
PROJECT ENGINEER

BRIDGE NO. 34-0006L/R
KILOMETER POST 13.2/13.9

SAN FRANCISCO OAKLAND BAY BRIDGE
EAST SPAN SEISMIC SAFETY PROJECT
SELF-ANCHORED SUSPENSION BRIDGE
(SUPERSTRUCTURE & TOWER)

GIRDER AT EAST TRANSITION DETAILS NO. 5

Rev. Date: 5-18-98

ORIGINAL SCALE IN MILLIMETERS FOR REDUCED PLANS 0 10 20 30 40 50 60 70 80 90 100

CU 04
EA 0120F1

DISREGARD PRINTS BEARING EARLIER REVISION DATES 04/09/10

REVISION DATES (PRELIMINARY STAGE ONLY)

SHEET 287SIR1 OF

FILE => I:\bb\04-012001\sas\contract plans and cco\cco\cco#87\1-original 09-01-11\dgn\agand15a.dgn

USERNAME => PTom DATE PLOTTED => 30 AUG 2011 TIME PLOTTED => 12:49:34

100 % PS&E

DIST.	COUNTY	ROUTE	KILOMETER POST TOTAL PROJECT	SHEET NO.	TOTAL SHEETS
04	SF	80	13.2/13.9	705R1	1204

Caltrans Metric

George Baker
REGISTERED ENGINEER - CIVIL
12-6-04
PLANS APPROVAL DATE

REGISTERED PROFESSIONAL ENGINEER George S. Baker No. C57112 Exp. 12/31/05 CIVIL STATE OF CALIFORNIA

The State of California or its officers or agents shall not be responsible for the accuracy or completeness of electronic copies of this plan sheet.

T.Y. LIN / MOFFATT & NICHOL
825 BATTERY STREET
SAN FRANCISCO, CA 94111

Caltrans now has a web site! To get to the web site, go to: http://www.dot.ca.gov

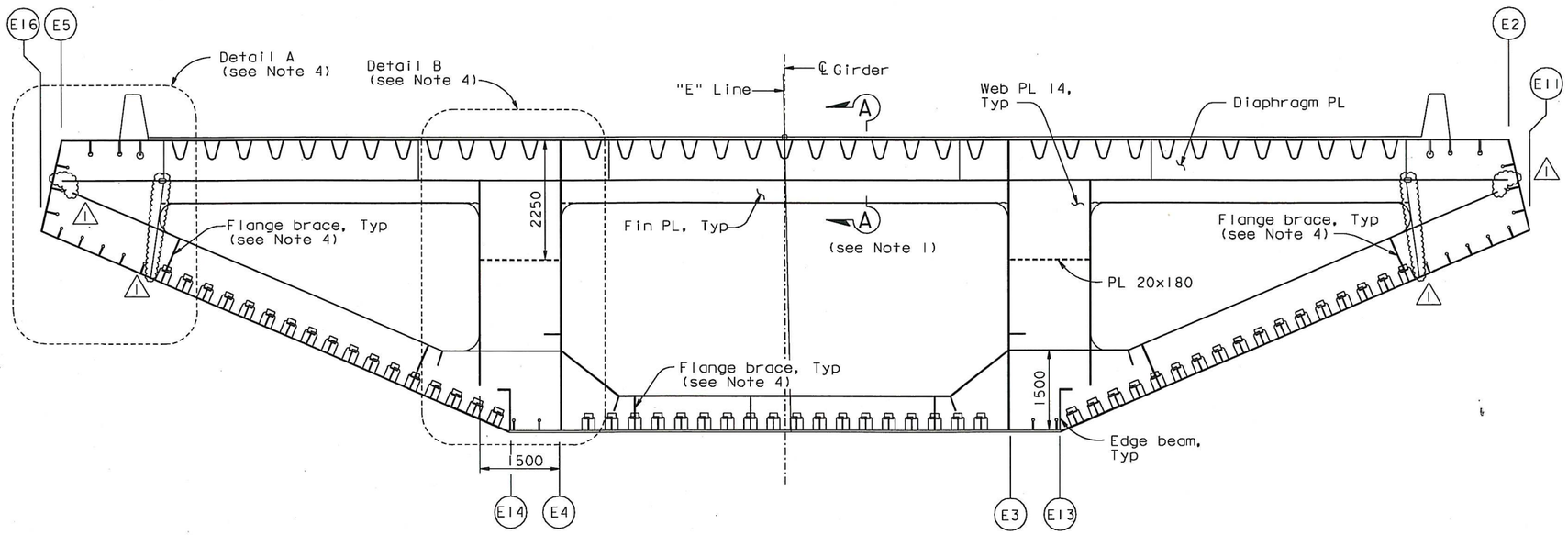

PP 116 (Shown) & PP 116.5 (Similar) (PP115.5 not shown, see Note 1)
1:50

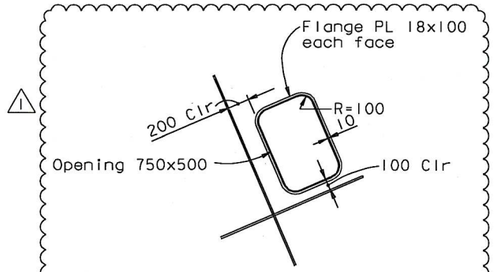

DETAIL C (Detail C' similar)
1:25

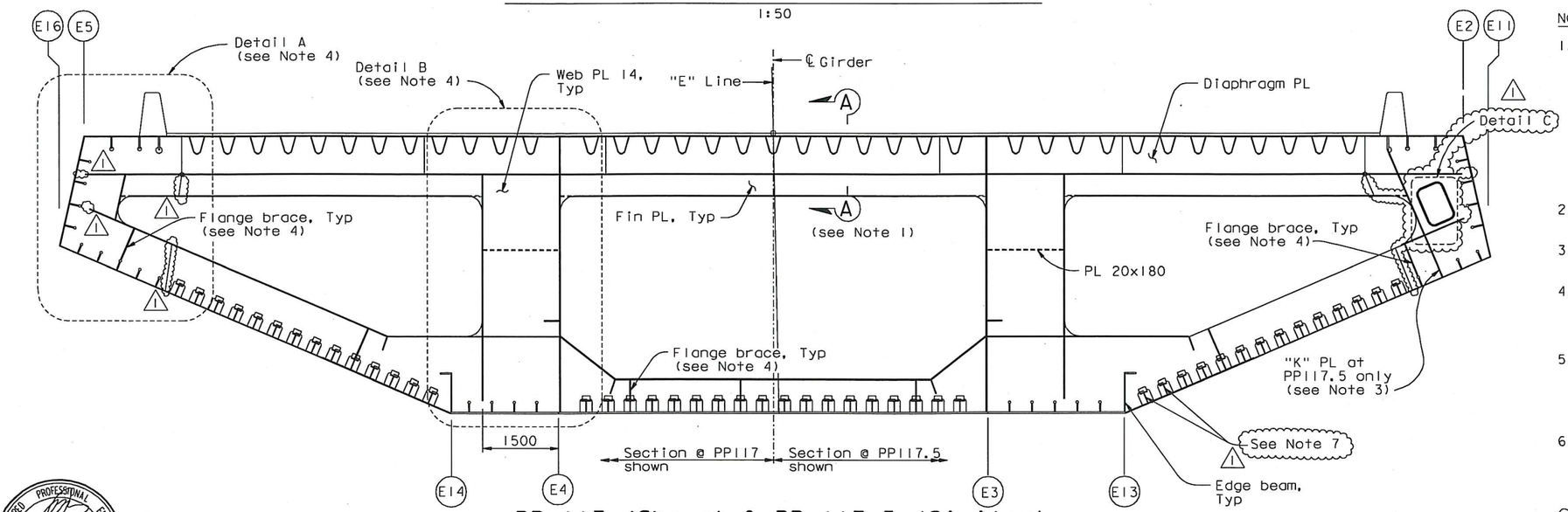

PP 117 (Shown) & PP 117.5 (Similar) (See Note 1)

"E" LINE SECTION (See Note 2)
1:50

NOTES:

1. Floorbeam at PP115.5 is similar to typical intermediate floorbeam Type 2. Floorbeams at PP116, PP116.5, PP117 and PP117.5 are similar to typical intermediate floorbeam Type 1 except as indicated. For details, including Section A-A, see "Typical Floorbeam Details No.8" and "Typical Floorbeam Details No.9" sheets. For other floorbeam details not shown, see "Typical Floorbeam Details" sheets. For girder dimensions not shown, see "Girder At East Transition" sheets.
2. "E" line girder is shown, "W" line girder is similar.
3. For "K" PL details, see "Girder At East Transition Details No.1" sheet.
4. For flange brace details and Details A and B, see "Floorbeam At East Transition Details No.1" and "Floorbeam At East Transition Details No.2" sheets.
5. For "Floorbeam At East Transition" sheets, all bolts shall be detailed according to the Bolt Dimension Table. See "Typical Girder Details No.1" sheet. All bolts are HS, unless noted otherwise.
6. For "Floorbeam At East Transition" sheets unless noted otherwise, all fillet welds shall be 6 mm for plate sizes not greater than 20 mm. For plate sizes greater than 20 mm, fillet welds shall be 8 mm unless noted otherwise.
7. For the two adjacent WT stiffeners at PP117.5, it is acceptable to use an enlarged cutout, subject to review and approval of the Engineer.

REGISTERED PROFESSIONAL ENGINEER Marwan N. Nader No. C 054426 Exp. 12/31/13 CIVIL STATE OF CALIFORNIA

FOR REVISIONS ONLY

CONTRACT CHANGE ORDER NO. 87
SHEET 61 OF 115

REQUESTS FOR INFORMATION NOT ADDRESSED IN THIS CCO REMAIN IN FORCE

ALL DIMENSIONS ARE IN MILLIMETERS UNLESS OTHERWISE SHOWN

R. Valizadeh/V. Toan/Y.L./W.L./F.C.
DESIGN OVERSIGHT
SIGN OFF DATE 04/18/12

MARK	DATE	DESCRIPTIONS	BY	CH'D	CCO#
1	04/18/12	EAST END OBG	MN	GB	87

REVISIONS

DESIGN	BY G. Baker	CHECKED	P. Ritchie
DETAILS	BY S. Camo	CHECKED	T. McMeans
QUANTITIES	BY C. Mauch	CHECKED	M. Roberts

PREPARED FOR THE STATE OF CALIFORNIA DEPARTMENT OF TRANSPORTATION

R. Manzanarez
PROJECT ENGINEER

BRIDGE NO. 34-0006L/R
KILOMETER POST 13.2/13.9

SAN FRANCISCO OAKLAND BAY BRIDGE
EAST SPAN SEISMIC SAFETY PROJECT
SELF-ANCHORED SUSPENSION BRIDGE
(SUPERSTRUCTURE & TOWER)

FLOORBEAM AT EAST TRANSITION NO. 1

Rev. Date: 5-18-98

ORIGINAL SCALE IN MILLIMETERS FOR REDUCED PLANS 0 10 20 30 40 50 60 70 80 90 100

CU 04
EA 0120F1

DISREGARD PRINTS BEARING EARLIER REVISION DATES

REVISION DATES (PRELIMINARY STAGE ONLY): 01/15/99 05/15/99 08/02/99 05/31/01 04/08/02 07/07/02 12/19/02

SHEET 288R1 OF

FILE => I:\bb\04-012001\sas\contract plans and cco\cco\cco#87\temp\agefd01.dgn

100% PS&E

USERNAME => DWinrow DATE PLOTTED => 18 APR 2012 TIME PLOTTED => 11:21:06

DIST.	COUNTY	ROUTE	KILOMETER POST TOTAL PROJECT	SHEET NO.	TOTAL SHEETS
04	SF	80	13.2/13.9	706R2	1204

Caltrans Metric

George Baker
REGISTERED ENGINEER - CIVIL
12-6-04
PLANS APPROVAL DATE

REGISTERED PROFESSIONAL ENGINEER George S. Baker No. C57112 Exp. 12/31/05 CIVIL STATE OF CALIFORNIA

The State of California or its officers or agents shall not be responsible for the accuracy or completeness of electronic copies of this plan sheet.

T.Y. LIN / MOFFATT & NICHOL
825 BATTERY STREET
SAN FRANCISCO, CA 94111

Caltrans now has a web site! To get to the web site, go to: http://www.dot.ca.gov

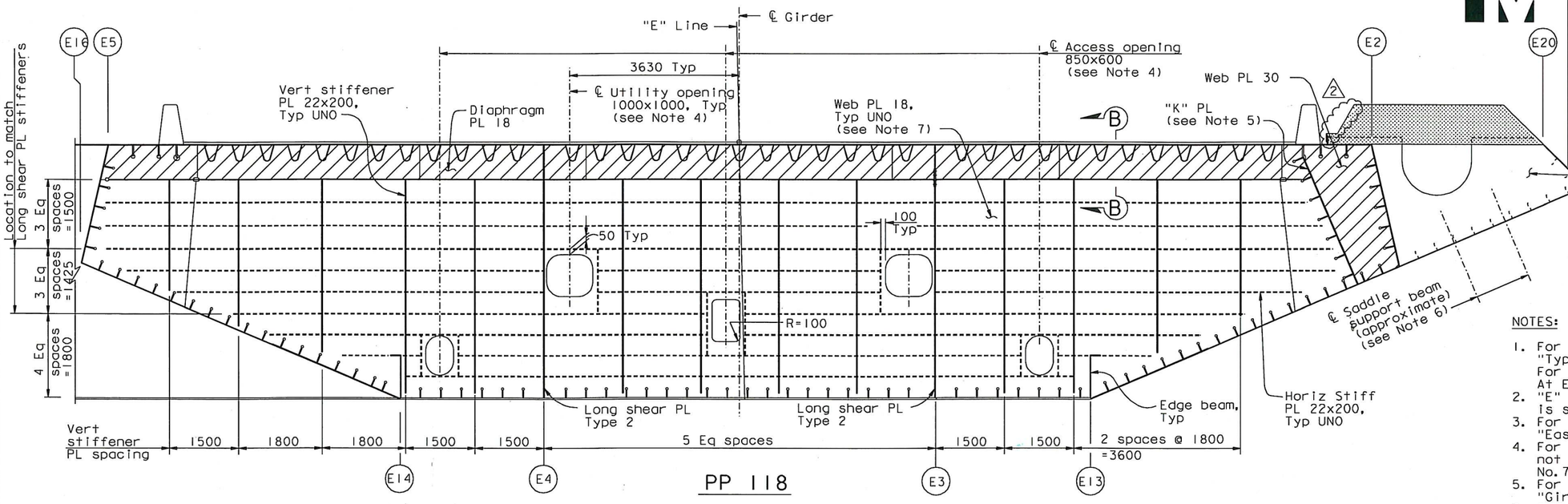

PP 118

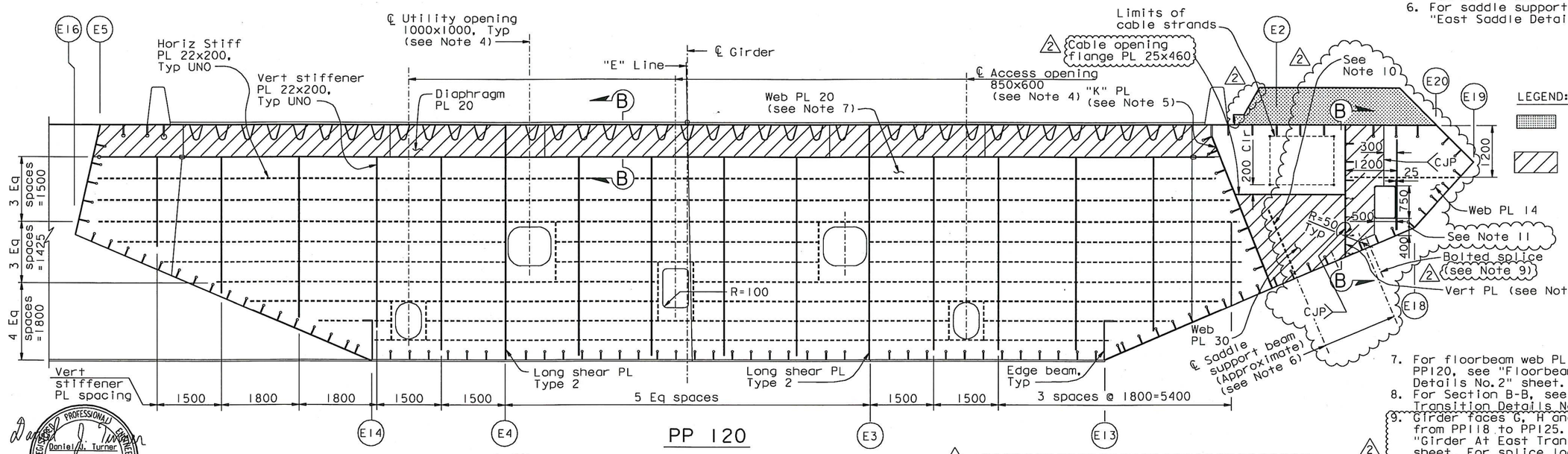

PP 120

"E" LINE SECTION (See Note 2)
1:50

NOTES:

1. For floorbeam details not shown, see "Typical Floorbeam Details No.1" sheet. For dimensions not shown, see "Girder At East Transition" sheets.
2. "E" Line girder is shown, "W" Line girder is similar.
3. For saddle housing details, see "East Saddle Housing Details" sheets.
4. For details of access and utility opening not shown, see "Typical Girder Details No.7" sheet, similar.
5. For "K" PL and vertical PL details, see "Girder At East Transition Details" sheets.
6. For saddle support beam details, see "East Saddle Details No.7" sheet.
7. For floorbeam web PL details at PP118 and PP120, see "Floorbeam. At East Transition Details No.2" sheet.
8. For Section B-B, see "Floorbeam At East Transition Details No.1" sheet.
9. Girder faces G, H and I are architectural from PP118 to PP125. For bolted splices, see "Girder At East Transition Details No.3" sheet. For splice locations, see "Girder At East Transition Nos.11 to 14" sheets.
10. Stiffener shall align with the web of the saddle support beam.
11. At the Contractor's option, the 400 dimension may be increased up to 450 mm.

ALL DIMENSIONS ARE IN MILLIMETERS UNLESS OTHERWISE SHOWN

Daniel J. Turner
REGISTERED PROFESSIONAL ENGINEER Daniel J. Turner No. C 65033 Exp. 06/30/13 CIVIL STATE OF CALIFORNIA

FOR REVISIONS ONLY

CONTRACT CHANGE ORDER NO. 87
SHEET 62 OF 115

REQUESTS FOR INFORMATION NOT ADDRESSED IN THIS CCO REMAIN IN FORCE

R. Valizadeh/V. Toan/Y.L./W.L./F.C.
DESIGN OVERSIGHT
Roya Valizadeh / Vong Toan / Y Liu
SIGN OFF DATE 09/01/11

Rev. Date: 5-18-98

MARK	DATE	DESCRIPTIONS	BY	CH'D	CCO#
2	09/01/11	EAST END OBG	DT	GB	87
1	01/09/08	CABLE TRAY CHANGES	GB	DT	4251

REVISIONS

	BY	CHECKED
DESIGN	G. Baker	P. Ritchie
DETAILS	S. Camo	T. McMeans
QUANTITIES	C. Mauch	M. Roberts

PREPARED FOR THE STATE OF CALIFORNIA DEPARTMENT OF TRANSPORTATION

R. Manzanarez
PROJECT ENGINEER

BRIDGE NO. 34-0006L/R
KILOMETER POST 13.2/13.9

CU 04
EA 0120F1

ORIGINAL SCALE IN MILLIMETERS FOR REDUCED PLANS 0 10 20 30 40 50 60 70 80 90 100

DISREGARD PRINTS BEARING EARLIER REVISION DATES

REVISION DATES (PRELIMINARY STAGE ONLY): 01/15/99 05/15/99 08/02/99 05/23/01 04/08/02 07/01/02 12/19/02

SHEET 289R2 OF

SAN FRANCISCO OAKLAND BAY BRIDGE
EAST SPAN SEISMIC SAFETY PROJECT
SELF-ANCHORED SUSPENSION BRIDGE
(SUPERSTRUCTURE & TOWER)

FLOORBEAM AT EAST TRANSITION NO. 2

100% PS&E

FILE => I:\bb\04-01200I\sas\contract plans and cco\cco\cco=87\I-original 09-01-11\dgn\agefd02.dgn

USERNAME => PTom DATE PLOTTED => 30 AUG 2011 TIME PLOTTED => 11:32:40

DIST.	COUNTY	ROUTE	KILOMETER POST TOTAL PROJECT	SHEET NO.	TOTAL SHEETS
04	SF	80	13.2/13.9	707R1	1204

Caltrans Metric

George Baker
REGISTERED ENGINEER - CIVIL
12-6-04
PLANS APPROVAL DATE

REGISTERED PROFESSIONAL ENGINEER George S. Baker No. C57112 Exp. 12/31/05 CIVIL STATE OF CALIFORNIA

The State of California or its officers or agents shall not be responsible for the accuracy or completeness of electronic copies of this plan sheet.

T.Y. LIN / MOFFATT & NICHOL
825 BATTERY STREET
SAN FRANCISCO, CA 94111

Caltrans now has a web site! To get to the web site, go to: http://www.dot.ca.gov

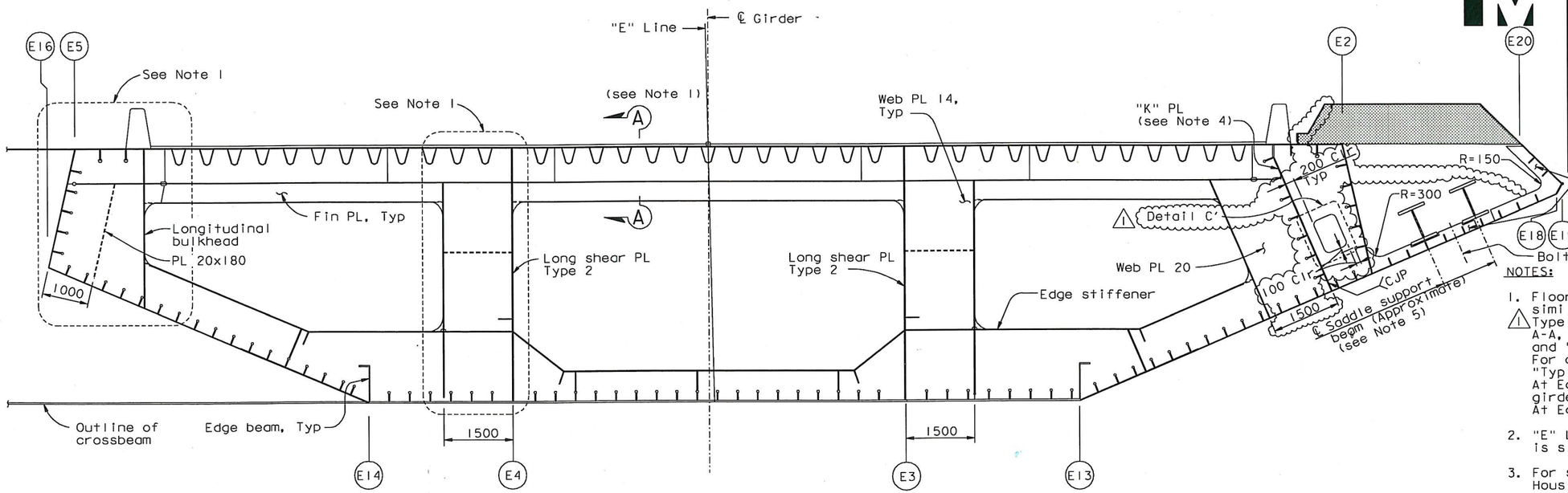

PP 118.35 (See Note 1)

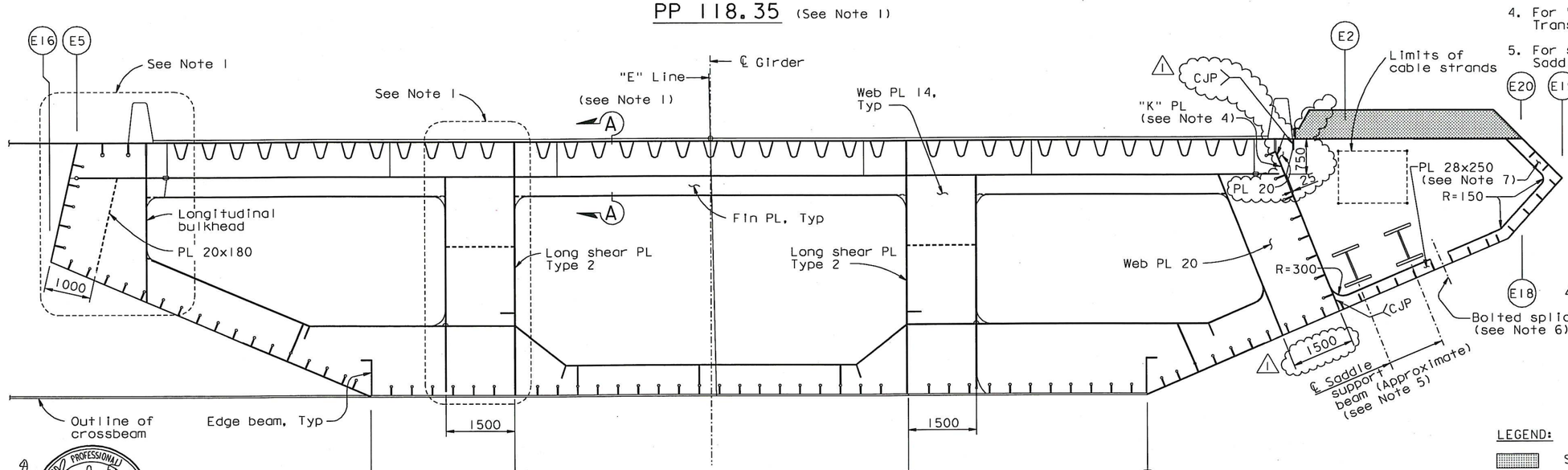

PP 119.65 (See Note 1)

"E" LINE SECTION (See Note 2)
1:50

1. Floorbeams at PP118.35 and PP119.65 are similar to typical intermediate floorbeam Type 1. For these details, including Section A-A, see "Typical Floorbeam Details No.8" and "Typical Floorbeam Details No.9" sheets. For other floorbeam details not shown, see "Typical Floorbeam Details" and "Floorbeam At East Transition Details" sheets. For girder dimensions not shown, see "Girder At East Transition" sheets.
2. "E" Line girder is shown, "W" Line girder is similar.
3. For saddle housing details, see "East Saddle Housing Details" sheets.
4. For "K" PL details, see "Girder At East Transition Details No.1" sheet.
5. For saddle support beam details, see "East Saddle Details No.7" sheet.
6. Girder faces G, H and I are architectural from PP118 to PP125. For bolted splices, see "Girder At East Transition Details No.3" sheet. For splice locations, see "Girder At East Transition No.11 to 14" sheets.
7. Longitudinal stiffeners are welded to each face of transverse stiffener PL. For details, see stiffener Type 9 on "Typical Girder Details No.5" sheet. Also provide transverse stiffeners around saddle opening at the three floorbeam webs at PP119.
8. For Detail C', see "Floorbeam At East Transition No.1" sheet.

LEGEND:

Saddle housing (see Note 3)

Daniel J. Turner
REGISTERED PROFESSIONAL ENGINEER Daniel J. Turner No. C 65033 Exp. 06/30/13 CIVIL STATE OF CALIFORNIA

FOR REVISIONS ONLY

CONTRACT CHANGE ORDER NO. 87
SHEET 63 OF 115

REQUESTS FOR INFORMATION NOT ADDRESSED IN THIS CCO REMAIN IN FORCE

ALL DIMENSIONS ARE IN MILLIMETERS UNLESS OTHERWISE SHOWN

R. Vallzadeh/V. Toan/Y.L./W.L./F.C.
DESIGN OVERSIGHT
Roya Valizadeh / Vong Toan / Y Liu
SIGN OFF DATE 09/01/11

MARK	DATE	DESCRIPTIONS	BY	CH'D	CCO#
1	09/01/11	EAST END OBG	DT	GB	87

REVISIONS

DESIGN	BY G. Baker	CHECKED	P. Ritchie
DETAILS	BY S. Camo	CHECKED	T. McMeans
QUANTITIES	BY C. Mauch	CHECKED	M. Roberts

PREPARED FOR THE STATE OF CALIFORNIA DEPARTMENT OF TRANSPORTATION

R. Manzanarez
PROJECT ENGINEER

BRIDGE NO. 34-0006L/R
KILOMETER POST 13.2/13.9

SAN FRANCISCO OAKLAND BAY BRIDGE
EAST SPAN SEISMIC SAFETY PROJECT
SELF-ANCHORED SUSPENSION BRIDGE
(SUPERSTRUCTURE & TOWER)

FLOORBEAM AT EAST TRANSITION NO. 3

Rev. Date: 5-18-98

ORIGINAL SCALE IN MILLIMETERS FOR REDUCED PLANS 0 10 20 30 40 50 60 70 80 90 100

CU 04
EA 0120F1

DISREGARD PRINTS BEARING EARLIER REVISION DATES

REVISION DATES (PRELIMINARY STAGE ONLY) 01/15/99 01/15/99 08/08/99 05/17/01 04/08/02 07/09/02 12/19/02

SHEET 290R1 OF

FILE => I:\bb\04-01200I\sas\contract plans and cco\cco\cco#87\I-original 09-01-11\dgn\agefd08.dgn

100 % PS&E

USERNAME => ALishansky DATE PLOTTED => 30 AUG 2011 TIME PLOTTED => 09:49:54

DIST.	COUNTY	ROUTE	KILOMETER POST TOTAL PROJECT	SHEET NO.	TOTAL SHEETS
04	SF	80	13.2/13.9	708R2	1204

George Baker
REGISTERED ENGINEER - CIVIL
12-6-04
PLANS APPROVAL DATE

REGISTERED PROFESSIONAL ENGINEER George S. Baker No. C57112 Exp. 12/31/05 CIVIL STATE OF CALIFORNIA

The State of California or its officers or agents shall not be responsible for the accuracy or completeness of electronic copies of this plan sheet.

T.Y. LIN / MOFFATT & NICHOL
825 BATTERY STREET
SAN FRANCISCO, CA 94111

Caltrans now has a web site! To get to the web site, go to: http://www.dot.ca.gov

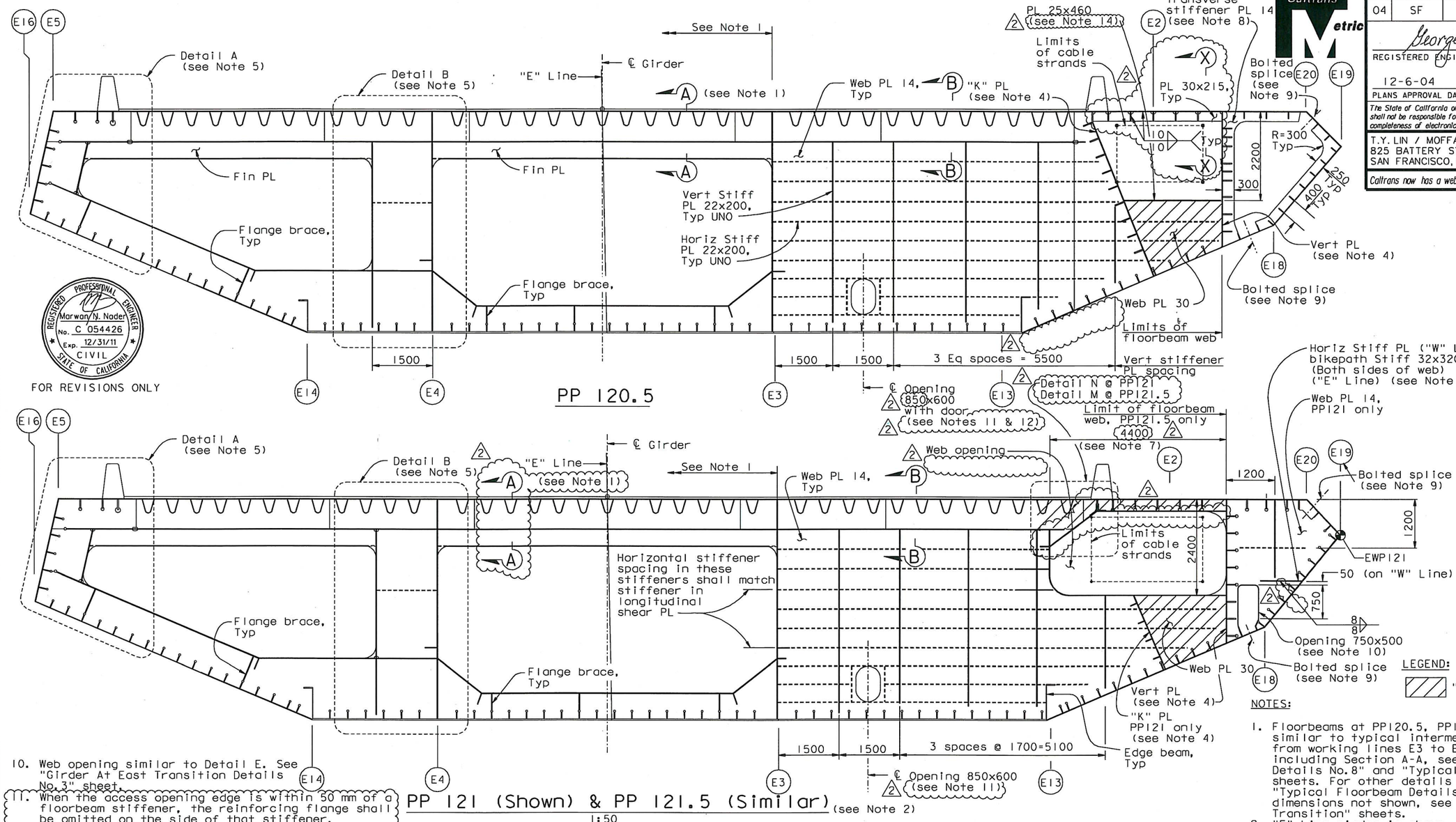

PP 120.5

PP 121 (Shown) & PP 121.5 (Similar) (see Note 2)
1:50

REGISTERED PROFESSIONAL ENGINEER Marwan N. Nader No. C 054426 Exp. 12/31/11 CIVIL STATE OF CALIFORNIA

FOR REVISIONS ONLY

LEGEND:

"Indicates SPCM web PL"

NOTES:

1. Floorbeams at PP120.5, PP121 and PP121.5 are similar to typical intermediate floorbeam Type I from working lines E3 to E16. For these details, including Section A-A, see "Typical Floorbeam Details No.8" and "Typical Floorbeam Details No.9" sheets. For other details not shown, see "Typical Floorbeam Details" sheets. For girder dimensions not shown, see "Girder At East Transition" sheets.
2. "E" Line girder is shown, "W" Line girder is similar.
3. For saddle housing details, see "East Saddle Housing Details" sheet.
4. For "K" PL and vertical PL details, see "Girder At East Transition Details" sheets.
5. For Details A, B and Section B-B, see "Floorbeam At East Transition Details No.1" sheet.
6. Bikepath bearing stiffeners shall be welded to girder PL using PJP with 80% penetration welds. Girder stiffener plates shall be coped on either side of bikepath stiffener. Bikepath stiffeners shall align with the bottom flanges of the bikepath cantilever beams at PP121, PP123 and PP125. For locations of bikepath cantilever beams, see "Bikepath Details" sheets.
7. Weld of diaphragm PL to girder PL A shall be CJP.
8. Longitudinal stiffeners are welded to each face of transverse stiffener PL. For details, see stiffener Type 9 on "Typical Girder Details No.5" sheet. Also provide tranverse stiffeners around openings at PP121.5, PP122.5, PP123.5 and PP124.5. For stiffener PL size @ PP124.5, see "Girder At East Transition Details No.3" sheet.
9. Girder faces G, H and I are architectural from PP118 to PP125. For bolted splices, see "Girder At East Transition Details No.3" sheet. For splice locations, see "Girder At East Transition Nos.11 to 14" sheet.
10. Web opening similar to Detail E. See "Girder At East Transition Details No.3" sheet.
11. When the access opening edge is within 50 mm of a floorbeam stiffener, the reinforcing flange shall be omitted on the side of that stiffener.
12. For additional details, see "Dehumidification Support Details No.2" sheet.
13. For Detail M, Detail N and Section X-X, see "Floorbeam At East Transition Details No.3" sheet.
14. At the Contractor's option, two PL 25x225 flanges may be used in lieu of the PL 25x460 flange, subject to review and approval of the Engineer.

CONTRACT CHANGE ORDER NO. 87
SHEET 64 OF 115

REQUESTS FOR INFORMATION NOT ADDRESSED IN THIS CCO REMAIN IN FORCE

ALL DIMENSIONS ARE IN MILLIMETERS UNLESS OTHERWISE SHOWN

MARK	DATE	DESCRIPTIONS	BY	CH'D	CCO#
2	09/01/11	EAST END OBG	GB	MN	87
1	11/05/10	PP119 ACCESS & PP125 PLATES	GB	DT	86

REVISIONS

R. Valizadeh/V. Toan/Y.L./W.L./F.C.
DESIGN OVERSIGHT
SIGN OFF DATE 09/01/11

DESIGN BY G. Baker CHECKED P. Ritchie
DETAILS BY S. Camo CHECKED T. McMeans
QUANTITIES BY C. Mauch CHECKED M. Roberts

PREPARED FOR THE STATE OF CALIFORNIA DEPARTMENT OF TRANSPORTATION

R. Manzanarez
PROJECT ENGINEER

BRIDGE NO. 34-0006L/R
KILOMETER POST 13.2/13.9

SAN FRANCISCO OAKLAND BAY BRIDGE
EAST SPAN SEISMIC SAFETY PROJECT
SELF-ANCHORED SUSPENSION BRIDGE
(SUPERSTRUCTURE & TOWER)

FLOORBEAM AT EAST TRANSITION NO. 4

Rev. Date: 5-18-98

ORIGINAL SCALE IN MILLIMETERS FOR REDUCED PLANS 0 10 20 30 40 50 60 70 80 90 100

CU 04
EA 0120F1

DISREGARD PRINTS BEARING EARLIER REVISION DATES

REVISION DATES (PRELIMINARY STAGE ONLY) 01/15/99 05/17/99 09/07/99 05/31/01 01/08/02 01/30/02 12/13/02 11/13/05

SHEET 291R2 OF

FILE => I:\bb\04-012001\sas\contract plans and cco\cco\cco=87\1-original 09-01-11\dgn\agefd07.dgn

USERNAME => PTom DATE PLOTTED => 30 AUG 2011 TIME PLOTTED => 11:42:54

100 % PS&E

DIST.	COUNTY	ROUTE	KILOMETER POST TOTAL PROJECT	SHEET NO.	TOTAL SHEETS
04	SF	80	13.2/13.9	709R2	1204

George Baker
REGISTERED ENGINEER - CIVIL
12-6-04
PLANS APPROVAL DATE

REGISTERED PROFESSIONAL ENGINEER George S. Baker No. C 57112 Exp. 12/31/05 CIVIL STATE OF CALIFORNIA

The State of California or its officers or agents shall not be responsible for the accuracy or completeness of electronic copies of this plan sheet.

T.Y. LIN / MOFFATT & NICHOL
825 BATTERY STREET
SAN FRANCISCO, CA 94111

Caltrans now has a web site! To get to the web site, go to: http://www.dot.ca.gov

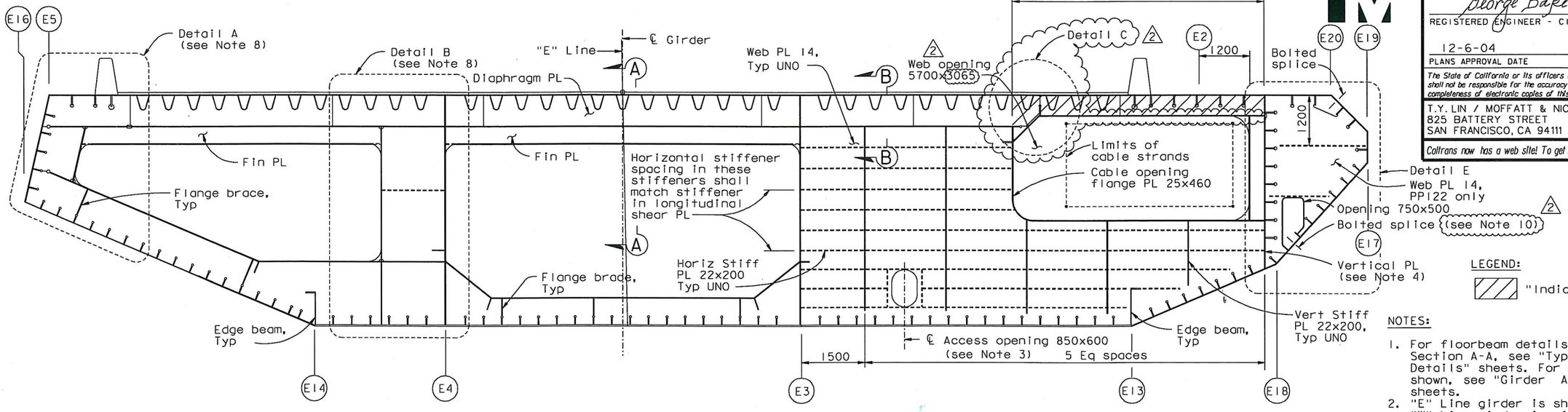

PP 122 (Shown) & PP 122.5 (Similar)

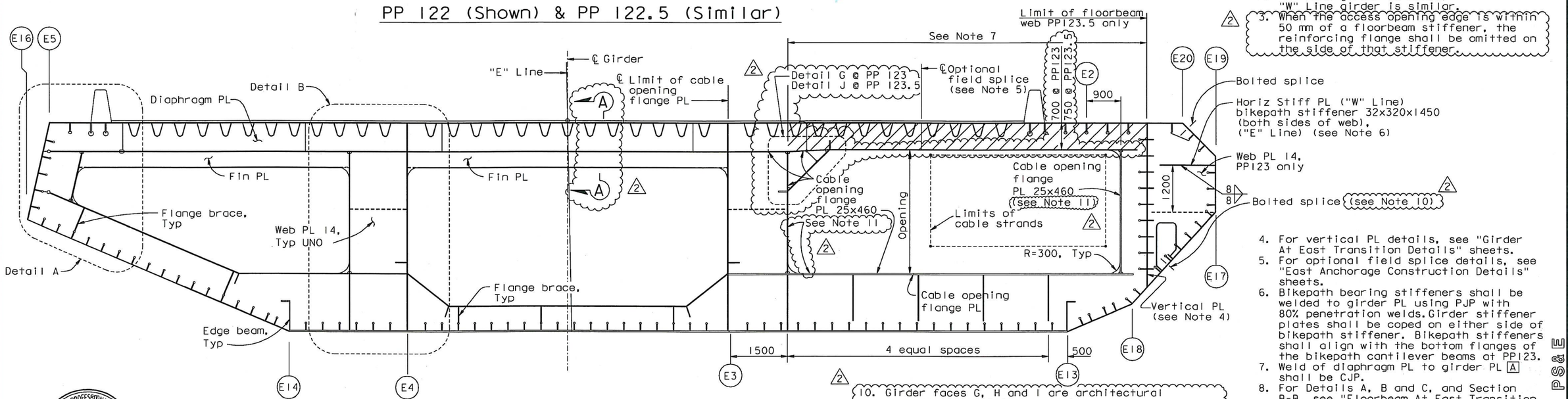

PP 123 (Shown) & PP 123.5 (Similar)

"E" LINE SECTION (See Note 2)
1:50

NOTES:

1. For floorbeam details not shown and Section A-A, see "Typical Floorbeam Details" sheets. For dimensions not shown, see "Girder At East Transition" sheets.
2. "E" Line girder is shown, "W" Line girder is similar.
3. When the access opening edge is within 50 mm of a floorbeam stiffener, the reinforcing flange shall be omitted on the side of that stiffener.
4. For vertical PL details, see "Girder At East Transition Details" sheets.
5. For optional field splice details, see "East Anchorage Construction Details" sheets.
6. Bikepath bearing stiffeners shall be welded to girder PL using PJP with 80% penetration welds. Girder stiffener plates shall be coped on either side of bikepath stiffener. Bikepath stiffeners shall align with the bottom flanges of the bikepath cantilever beams at PP123.
7. Weld of diaphragm PL to girder PL [A] shall be CJP.
8. For Details A, B and C, and Section B-B, see "Floorbeam At East Transition Details No. 1" sheet. For Details G & J, see "Floorbeam at East Transition Details No. 3" sheet.
9. For Detail E, see "Girder At East Transition Details No. 3" sheet.
10. Girder faces G, H and I are architectural from PP118 to PP125. For bolted splices, see "Girder At East Transition Details No. 3" sheet. For splice locations, see "Girder At East Transition Nos. 11 to 14" sheets.
11. At the Contractor's option, two PL 25x225 may be used in lieu of PL 25x460 at bottom and sides of cable opening only, subject to review and approval of the Engineer.

LEGEND:

"Indicates SPCM web PL"

ALL DIMENSIONS ARE IN MILLIMETERS UNLESS OTHERWISE SHOWN

REGISTERED PROFESSIONAL ENGINEER Marwan N. Nader No. C 054426 Exp. 12/31/11 CIVIL STATE OF CALIFORNIA

FOR REVISIONS ONLY

CONTRACT CHANGE ORDER NO. 87
SHEET 65 OF 115

REQUESTS FOR INFORMATION NOT ADDRESSED IN THIS CCO REMAIN IN FORCE

R. Valizadeh/V. Toan/Y.L./W.L./F.C.
DESIGN OVERSIGHT
SIGN OFF DATE 09/01/11

MARK	DATE	DESCRIPTIONS	BY	CH'D	CCO#
2	09/01/11	EAST END OBG	GB	MN	87
1	11/05/10	PP119 ACCESS & PP125 PLATES	GB	DT	86

REVISIONS

DESIGN	BY G. Baker	CHECKED P. Ritchie	
DETAILS	BY S. Camo	CHECKED T. McMeans	
QUANTITIES	BY C. Mauch	CHECKED M. Roberts	

PREPARED FOR THE STATE OF CALIFORNIA DEPARTMENT OF TRANSPORTATION

R. Manzanarez
PROJECT ENGINEER

BRIDGE NO. 34-0006L/R
KILOMETER POST 13.2/13.9

SAN FRANCISCO OAKLAND BAY BRIDGE
EAST SPAN SEISMIC SAFETY PROJECT
SELF-ANCHORED SUSPENSION BRIDGE
(SUPERSTRUCTURE & TOWER)

FLOORBEAM AT EAST TRANSITION NO. 5

Rev. Date: 5-18-98

ORIGINAL SCALE IN MILLIMETERS FOR REDUCED PLANS 0 10 20 30 40 50 60 70 80 90 100

CU 04
EA 0120F1

DISREGARD PRINTS BEARING EARLIER REVISION DATES

REVISION DATES (PRELIMINARY STAGE ONLY) 05/15/99 08/02/99 05/31/01 01/08/02 07/01/02 12/13/02 11/13/05

SHEET 292R2 OF

FILE => I:\bb\04-012001\sas\contract plans and cco\cco\cco#87\1-original 09-01-11\dgn\agefd03.dgn

USERNAME => PTom DATE PLOTTED => 30 AUG 2011 TIME PLOTTED => 11:33:49

100 % PS&E

DIST.	COUNTY	ROUTE	KILOMETER POST TOTAL PROJECT	SHEET NO.	TOTAL SHEETS
04	SF	80	13.2/13.9	710R3	1204

George Baker
REGISTERED ENGINEER - CIVIL
12-6-04
PLANS APPROVAL DATE

REGISTERED PROFESSIONAL ENGINEER George S. Baker No. C 57112 Exp. 12/31/05 CIVIL STATE OF CALIFORNIA

The State of California or its officers or agents shall not be responsible for the accuracy or completeness of electronic copies of this plan sheet.

T.Y. LIN / MOFFATT & NICHOL
825 BATTERY STREET
SAN FRANCISCO, CA 94111

Caltrans now has a web site! To get to the web site, go to: http://www.dot.ca.gov

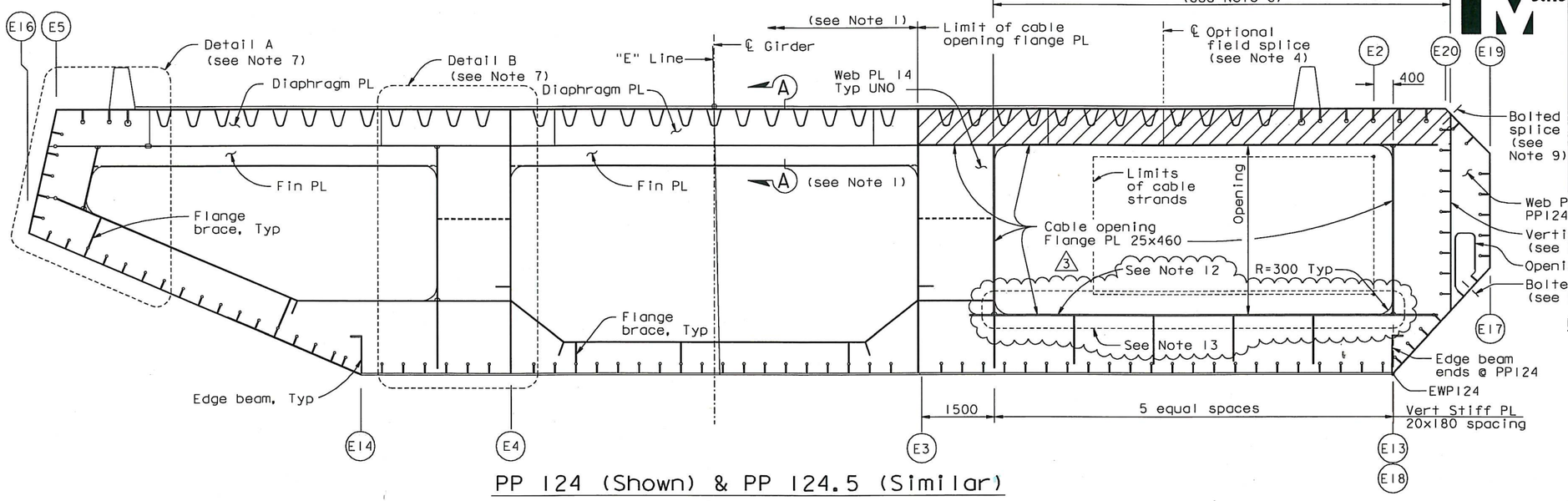

PP 124 (Shown) & PP 124.5 (Similar)

LEGEND:

"Indicates SPCM web plate"

NOTES:

1. Floorbeams at PP124 and PP124.5 are similar to typical intermediate floorbeam Type 1 from working lines E3 to E16. For these details, including Section A-A, see "Typical Floorbeam Details No. 8" and "Typical Floorbeam Details No. 9" sheets. For other details not shown, see "Typical Floorbeam Details" sheet. For girder dimensions not shown, see "Girder At East Transition" sheets.
2. "E" Line girder is shown, "W" Line girder is similar.
3. For vertical plate details, see "Girder At East Transition Details No. 2" sheet.
4. When the access opening edge is within 50 mm of a floorbeam stiffener, the reinforcing flange shall be omitted on the side of that stiffener.
5. For optional field splice details, see "East Anchorage Construction Details" sheets.
6. For floorbeam web plate details at PP125, see "Floorbeam At East Transition Details No. 2" sheet.
7. For Details A and B, and Section B-B, see "Floorbeam At East Transition Details No. 1" sheet.
8. Weld of diaphragm PL to girder PL [A] shall be CJP.
9. Girder faces G, H and I are architectural from PP118 to PP125. For bolted splices, see "Girder At East Transition Details No. 3" sheet. For splice locations, see "Girder At East Transition Nos. 11 to 14" sheet.
10. Ventilation openings shall be reinforced with doubler plates. For doubler plate details, see "Floorbeam At East Transition No. 6A" sheet.
11. This ventilation opening occurs in E-Line girder only.
12. At the Contractor's option, two PL 25x225 may be used in lieu of PL 25x460, at bottom and sides of cable opening only, subject to review and approval of the Engineer.
13. For details at PP124.5 on "E" Line and "W" Line girders, see "Floorbeams At East Transition No. 6A" sheet.

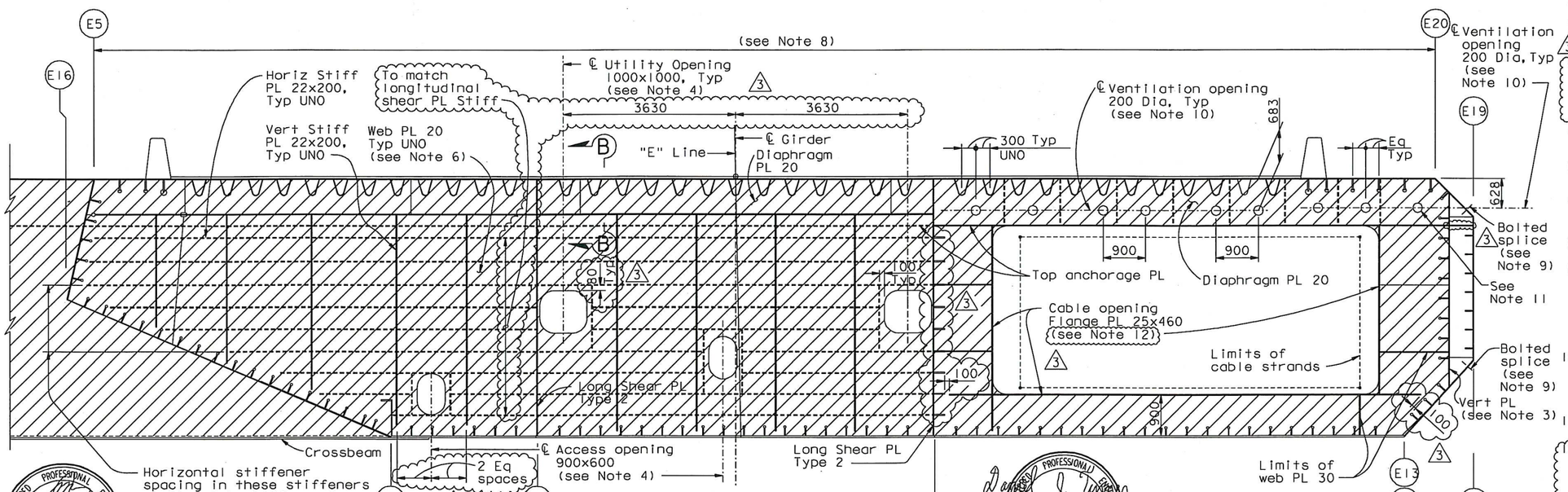

PP 125

"E" LINE SECTION (See Note 2)

1:50

REGISTERED PROFESSIONAL ENGINEER Marwan N. Nader No. C 054426 Exp. 12/31/11 CIVIL STATE OF CALIFORNIA

REGISTERED PROFESSIONAL ENGINEER Daniel J. Turner No. C 65033 Exp. 06/30/13 CIVIL STATE OF CALIFORNIA

CONTRACT CHANGE ORDER NO. 87
SHEET 66 OF 115

REQUESTS FOR INFORMATION NOT ADDRESSED IN THIS CCO REMAIN IN FORCE

FOR REVISIONS 1 AND 2 ONLY

FOR REVISIONS 3 ONLY

ALL DIMENSIONS ARE IN MILLIMETERS UNLESS OTHERWISE SHOWN

MARK	DATE	DESCRIPTIONS	BY	CH'D	CCO#
3	09/01/11	EAST END OBG	DT	GB	87
2	06/10/11	ADDITIONAL ACCESS AT EAST END	DT	MN	202
1	11/05/10	PP119 ACCESS & PP125 PLATES	GB	DT	86

REVISIONS

R. Valizadeh/V. Toan/Y.L./W.L./F.C.
DESIGN OVERSIGHT
SIGN OFF DATE 09/01/11

	BY	CHECKED
DESIGN	G. Baker	P. Ritchie
DETAILS	S. Camo	T. McMeans
QUANTITIES	C. Mauch	M. Roberts

PREPARED FOR THE STATE OF CALIFORNIA DEPARTMENT OF TRANSPORTATION

R. Manzanarez
PROJECT ENGINEER

BRIDGE NO. 34-0006L/R
KILOMETER POST 13.2/13.9

SAN FRANCISCO OAKLAND BAY BRIDGE
EAST SPAN SEISMIC SAFETY PROJECT
SELF-ANCHORED SUSPENSION BRIDGE
(SUPERSTRUCTURE & TOWER)

FLOORBEAM AT EAST TRANSITION NO. 6

Rev. Date: 5-18-98

ORIGINAL SCALE IN MILLIMETERS FOR REDUCED PLANS 0 10 20 30 40 50 60 70 80 90 100

CU 04
EA 0120F1

DISREGARD PRINTS BEARING EARLIER REVISION DATES

REVISION DATES (PRELIMINARY STAGE ONLY) 05/15/99 08/02/99 05/24/01 04/08/02 07/01/02 12/19/02

SHEET 293R3 OF

FILE => I:\bb\04-01200I\sas\contract plans and cco\cco\cco#87\I-original 09-01-11\dgn\agefd04.dgn

USERNAME => PTom DATE PLOTTED => 30 AUG 2011 TIME PLOTTED => 11:35:52

100 % PS&E

DIST.	COUNTY	ROUTE	KILOMETER POST TOTAL PROJECT	SHEET NO.	TOTAL SHEETS
04	SF	80	13.2/13.9	710S1R1	1204

REGISTERED ENGINEER - CIVIL

06-10-11

PLANS APPROVAL DATE

The State of California or its officers or agents shall not be responsible for the accuracy or completeness of electronic copies of this plan sheet.

REGISTERED PROFESSIONAL ENGINEER Marwan N. Nader No. C 054426 Exp. 12/31/13 CIVIL STATE OF CALIFORNIA

T.Y. LIN / MOFFATT & NICHOL
825 BATTERY STREET
SAN FRANCISCO, CA 94111

Caltrans now has a web site! To get to the web site, go to: http://www.dot.ca.gov

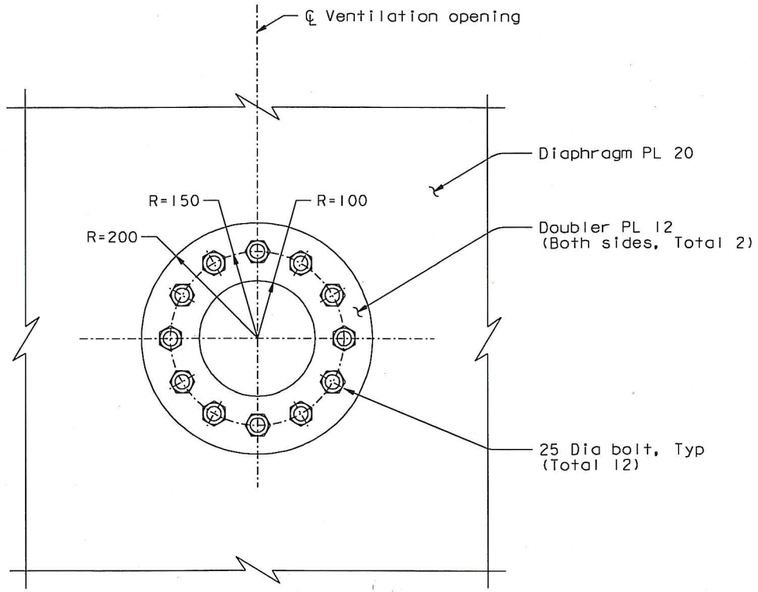

DOUBLER PLATE DETAIL
1:5

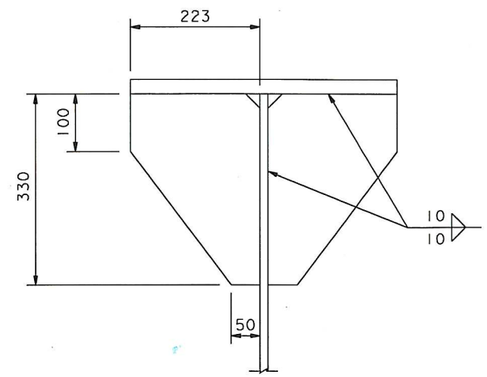

SECTION A-A
1:5

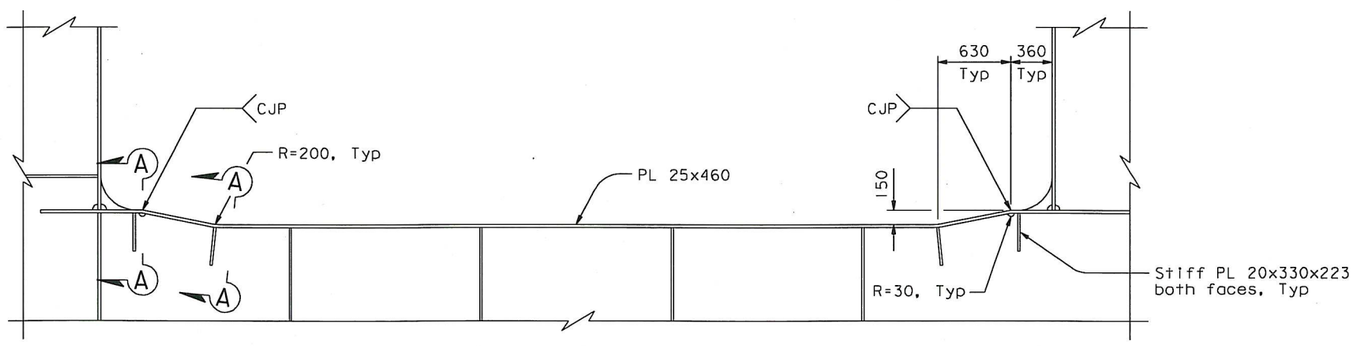

FLOORBEAM SECTION
1:25
(Below cable opening at PP 124.5)
("E" Line shown, "W" Line similar)

NOTES:

1. All faying surfaces of doubler plates and diaphragm PL shall comply with Class B surface.
2. Grind smooth all cut edges.

CONTRACT CHANGE ORDER NO. 87
SHEET 67 OF 115

REQUESTS FOR INFORMATION NOT ADDRESSED IN THIS CCO REMAIN IN FORCE

ALL DIMENSIONS ARE IN MILLIMETERS UNLESS OTHERWISE SHOWN

MARK	DATE	DESCRIPTIONS	BY	CH'D	CCO#
1	04/18/12	EAST END OBG	GB	MN	87
0	06/10/11	ADDITIONAL ACCESS AT EAST END	DT	MN	202

REVISIONS

R. Valizadeh/V. Toan/Y.L./W.L./F.C.
DESIGN OVERSIGHT
SIGN OFF DATE 04/18/12

	BY	CHECKED
DESIGN	D. Turner	M. Nader
DETAILS	D. Turner	G. Baker
QUANTITIES	D. Turner	G. Baker

PREPARED FOR THE STATE OF CALIFORNIA DEPARTMENT OF TRANSPORTATION

R. Manzanarez
PROJECT ENGINEER

BRIDGE NO. 34-0006L/R
KILOMETER POST 13.2/13.9

SAN FRANCISCO OAKLAND BAY BRIDGE
EAST SPAN SEISMIC SAFETY PROJECT
SELF-ANCHORED SUSPENSION BRIDGE
(SUPERSTRUCTURE & TOWER)

FLOORBEAM AT EAST TRANSITION NO. 6A

Rev. Date: 5-18-98

ORIGINAL SCALE IN MILLIMETERS FOR REDUCED PLANS 0 10 20 30 40 50 60 70 80 90 100

CU 04
EA 0120F1

DISREGARD PRINTS BEARING EARLIER REVISION DATES 06/10/11

REVISION DATES (PRELIMINARY STAGE ONLY)

SHEET 293S1R1 OF

FILE => I:\bb\04-0120F1\sas\contract plans and cco\cco\cco#87\temp\agefd04a.dgn

100 % PS&E

USERNAME => DWinrow DATE PLOTTED => 18 APR 2012 TIME PLOTTED => 11:22:05

DIST.	COUNTY	ROUTE	KILOMETER POST TOTAL PROJECT	SHEET NO.	TOTAL SHEETS
04	SF	80	13.2/13.9	711R1	1204

George Baker
REGISTERED ENGINEER - CIVIL
12-6-04
PLANS APPROVAL DATE

REGISTERED PROFESSIONAL ENGINEER George S. Baker No. C57112 Exp. 12/31/05 CIVIL STATE OF CALIFORNIA

The State of California or its officers or agents shall not be responsible for the accuracy or completeness of electronic copies of this plan sheet.

T.Y. LIN / MOFFATT & NICHOL
825 BATTERY STREET
SAN FRANCISCO, CA 94111

Caltrans now has a web site! To get to the web site, go to: http://www.dot.ca.gov

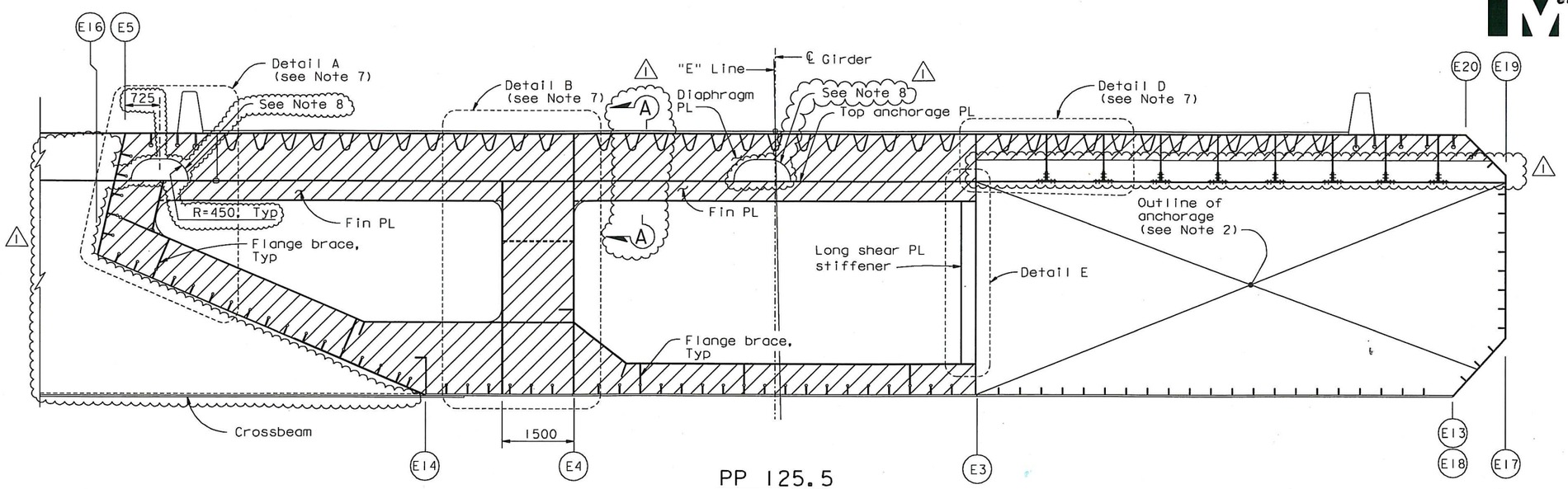

PP 125.5

LEGEND:

"Indicates SPCM web PL"

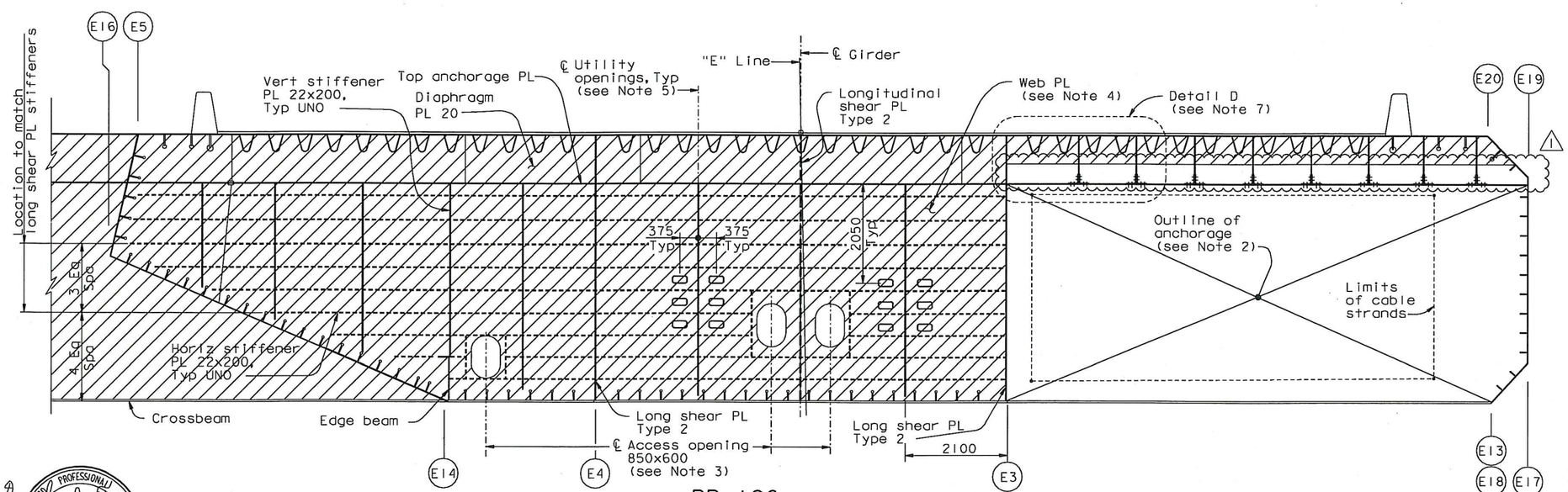

PP 126

"E" LINE SECTION (See Note 6)
1:50

NOTES:

1. For floorbeam details not shown and Section A-A, see "Typical Floorbeam Details" sheets and "Floorbeam At East Transition Details" sheets.
2. For anchorage details, see "East Cable "E" Line Anchorage Layout" sheets and "Girder At East Transition No.14" sheet.
3. For details of access opening, see "Typical Girder Details No.7" sheet.
4. For floorbeam web PL details at PP126, see "Floorbeam At East Transition Details No.2" sheet.
5. For utility opening details not shown, see "Girder At Pier E2 No.4" sheet.
6. "E" Line girder is shown, "W" Line girder is similar.
7. For Details A, B, D and E, see "Floorbeam At East Transition Details" sheets.
8. It is acceptable to use a single straight stiffener along the top edge of the opening 1000 mm long with typical termination details in lieu of a stiffening flange at this location, subject to review and approval of the Engineer.

REGISTERED PROFESSIONAL ENGINEER Daniel J. Turner No. C 65033 Exp. 06/30/13 CIVIL STATE OF CALIFORNIA

FOR REVISIONS ONLY

CONTRACT CHANGE ORDER NO. 87
SHEET 68 OF 115

REQUESTS FOR INFORMATION NOT ADDRESSED IN THIS CCO REMAIN IN FORCE

ALL DIMENSIONS ARE IN MILLIMETERS UNLESS OTHERWISE SHOWN

R. Valizadeh/V. Toan/Y.L./W.L./F.C.
DESIGN OVERSIGHT
SIGN OFF DATE 09/01/11

MARK	DATE	DESCRIPTIONS	BY	CH'D	CCO#
1	09/01/11	EAST END OBG	DT	GB	87

REVISIONS

Rev. Date: 5-18-98

DESIGN	BY G. Baker	CHECKED	P. Ritchie
DETAILS	BY S. Camo	CHECKED	T. McMeans
QUANTITIES	BY C. Mauch	CHECKED	M. Roberts

PREPARED FOR THE STATE OF CALIFORNIA DEPARTMENT OF TRANSPORTATION

R. Manzanarez
PROJECT ENGINEER

BRIDGE NO. 34-0006L/R
KILOMETER POST 13.2/13.9

SAN FRANCISCO OAKLAND BAY BRIDGE
EAST SPAN SEISMIC SAFETY PROJECT
SELF-ANCHORED SUSPENSION BRIDGE
(SUPERSTRUCTURE & TOWER)

FLOORBEAM AT EAST TRANSITION NO. 7

ORIGINAL SCALE IN MILLIMETERS FOR REDUCED PLANS 0 10 20 30 40 50 60 70 80 90 100

CU 04
EA 0120F1

DISREGARD PRINTS BEARING EARLIER REVISION DATES

REVISION DATES (PRELIMINARY STAGE ONLY) 05/18/99 09/27/99 05/17/01 01/08/02 07/07/02 12/19/02

SHEET 294R1 OF

FILE => I:\bb\04-012001\sas\contract plans and cco\cco\cco#87\1-original 09-01-11\dgn\agefd05.dgn

USERNAME => PTom DATE PLOTTED => 30 AUG 2011 TIME PLOTTED => 11:39:23

100% PS&E

DIST.	COUNTY	ROUTE	KILOMETER POST TOTAL PROJECT	SHEET NO.	TOTAL SHEETS
04	SF	80	13.2/13.9	712R2	1204

George Baker
REGISTERED ENGINEER - CIVIL
12-6-04
PLANS APPROVAL DATE

REGISTERED PROFESSIONAL ENGINEER George S. Baker No. C57112 Exp. 12/31/05 CIVIL STATE OF CALIFORNIA

The State of California or its officers or agents shall not be responsible for the accuracy or completeness of electronic copies of this plan sheet.

T.Y. LIN / MOFFATT & NICHOL
825 BATTERY STREET
SAN FRANCISCO, CA 94111

Caltrans now has a web site! To get to the web site, go to: http://www.dot.ca.gov

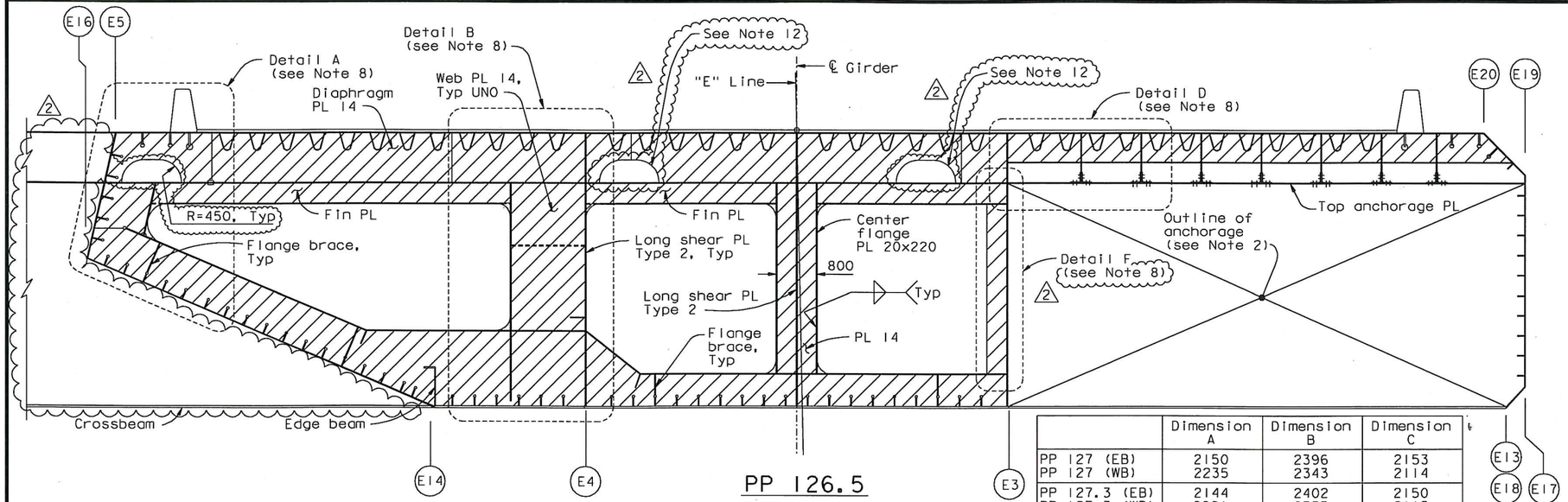

PP 126.5

	Dimension A	Dimension B	Dimension C
PP 127 (EB)	2150	2396	2153
PP 127 (WB)	2235	2343	2114
PP 127.3 (EB)	2144	2402	2150
PP 127.3 (WB)	2221	2355	2115

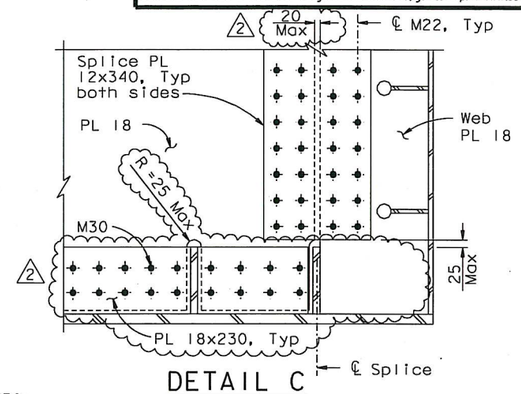

DETAIL C
1:10

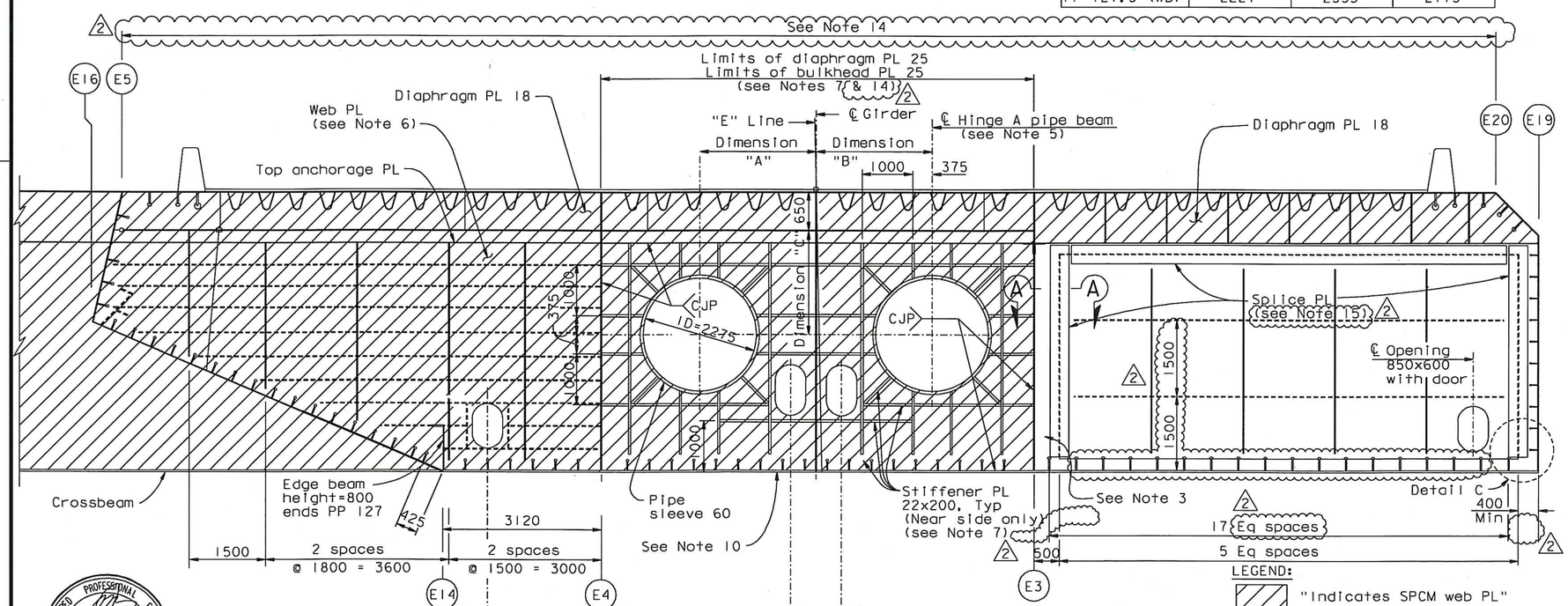

PP 127

"E" LINE SECTION (See Note 9)
1:50

LEGEND:
"Indicates SPCM web PL"

NOTES:

1. For floorbeam details not shown, see "Typical Floorbeam Details" sheets. For dimensions not shown, see "Girder At East Transition" sheets.
2. For anchorage details, see "East Cable Anchorage "E" Line Layout" sheets and "Girder At East Transition No. 14" sheet.
3. For splice of floorbeam to longitudinal shear PL at PP127, see "Girder At East Transition" sheets.
4. For details of access opening, see "Typical Girder Details No. 7" sheet. Center access openings between adjacent stiffeners.
5. For details of pipe beam, see "Hinge A Details" sheets.
6. For floorbeam web PL details at PP127, see "Floorbeam At East Transition Details No. 2" sheet.
7. Bulkhead is similar to diaphragm PL. For details of diaphragm and bulkhead not shown, see "Hinge A Details" sheets.
8. For Details A, B, D and F, see "Floorbeam At East Transition Details" sheets.
9. "E" Line girder is shown, "W" Line girder is similar. For both "E" Line and "W" Line, Dimension A shall be taken to the North of the CL girder and Dimension B to the South of the CL girder.
10. For stiffener transitions, see "Typical Girder Details No. 16" sheet.
11. For Section A-A, see "Floorbeam At East Transition No. 8A" sheet.
12. It is acceptable to use a single straight stiffener along the top edge of the opening 1000 mm long with typical termination details in lieu of a stiffening flange at this location, subject to review and approval of the Engineer.
13. Taper the horizontal stiffener in the longitudinal shear PL at 1 to 2.5 to be flush with the edge of the access opening. Stiffener remains tapered between PP127-400 and PP127.3+400. In addition, the access opening reinforcing flange shall be discontinuous. This flange crosses @ PP127 and PP127.3; fillet weld the access opening stiffener at each face of the longitudinal shear PL stiffener.
14. Weld of diaphragm PL and bulkhead PL to girder PL A shall be a CJP.
15. At the Contractor's option, the bolted splice may be replaced with a CJP, subject to review and approval of the Engineer.

ALL DIMENSIONS ARE IN MILLIMETERS UNLESS OTHERWISE SHOWN

PROFESSIONAL ENGINEER Marwan N. Nader No. C 054426 Exp. 12/31/11 CIVIL STATE OF CALIFORNIA

FOR REVISIONS ONLY

CONTRACT CHANGE ORDER NO. 87
SHEET 69 OF 115

REQUESTS FOR INFORMATION NOT ADDRESSED IN THIS CCO REMAIN IN FORCE

R. Vallizadeh/V. Toan/Y.L./W.L./F.C.
DESIGN OVERSIGHT
SIGN OFF DATE 09/01/11

MARK	DATE	DESCRIPTIONS	BY	CH'D	CCO#
2	09/01/11	EAST END OBG	MN	DT	87
1	04/09/10	HINGE A MODIFICATIONS	MN	GB	120

REVISIONS

	BY	CHECKED
DESIGN	G. Baker	P. Ritchie
DETAILS	S. Camo	T. McMeans
QUANTITIES	C. Mauch	M. Roberts

PREPARED FOR THE STATE OF CALIFORNIA DEPARTMENT OF TRANSPORTATION

R. Manzanarez
PROJECT ENGINEER

BRIDGE NO. 34-0006L/R
KILOMETER POST 13.2/13.9

SAN FRANCISCO OAKLAND BAY BRIDGE
EAST SPAN SEISMIC SAFETY PROJECT
SELF-ANCHORED SUSPENSION BRIDGE
(SUPERSTRUCTURE & TOWER)

FLOORBEAM AT EAST TRANSITION NO. 8

Rev. Date: 5-18-98

ORIGINAL SCALE IN MILLIMETERS FOR REDUCED PLANS 0 10 20 30 40 50 60 70 80 90 100

CU 04
EA 0120F1

DISREGARD PRINTS BEARING EARLIER REVISION DATES

REVISION DATES (PRELIMINARY STAGE ONLY) 05/08/99 08/02/99 05/24/01 01/08/02 01/09/02 12/19/02

SHEET 295R2 OF

FILE => I:\bb\04-012001\sas\contract plans and cco\cco\cco#87\1-original 09-01-11\dgn\agefd09.dgn

USERNAME => ALishansk DATE PLOTTED => 30 AUG 2011 TIME PLOTTED => 09:52:18

100% PS&E

DIST.	COUNTY	ROUTE	KILOMETER POST TOTAL PROJECT	SHEET NO.	TOTAL SHEETS
04	SF	80	13.2/13.9	714R3	1204

George Baker
REGISTERED ENGINEER - CIVIL
12-6-04
PLANS APPROVAL DATE

REGISTERED PROFESSIONAL ENGINEER George S. Baker No. C 57112 Exp. 12/31/05 CIVIL STATE OF CALIFORNIA

The State of California or its officers or agents shall not be responsible for the accuracy or completeness of electronic copies of this plan sheet.

T.Y. LIN / MOFFATT & NICHOL
825 BATTERY STREET
SAN FRANCISCO, CA 94111

Caltrans now has a web site! To get to the web site, go to: http://www.dot.ca.gov

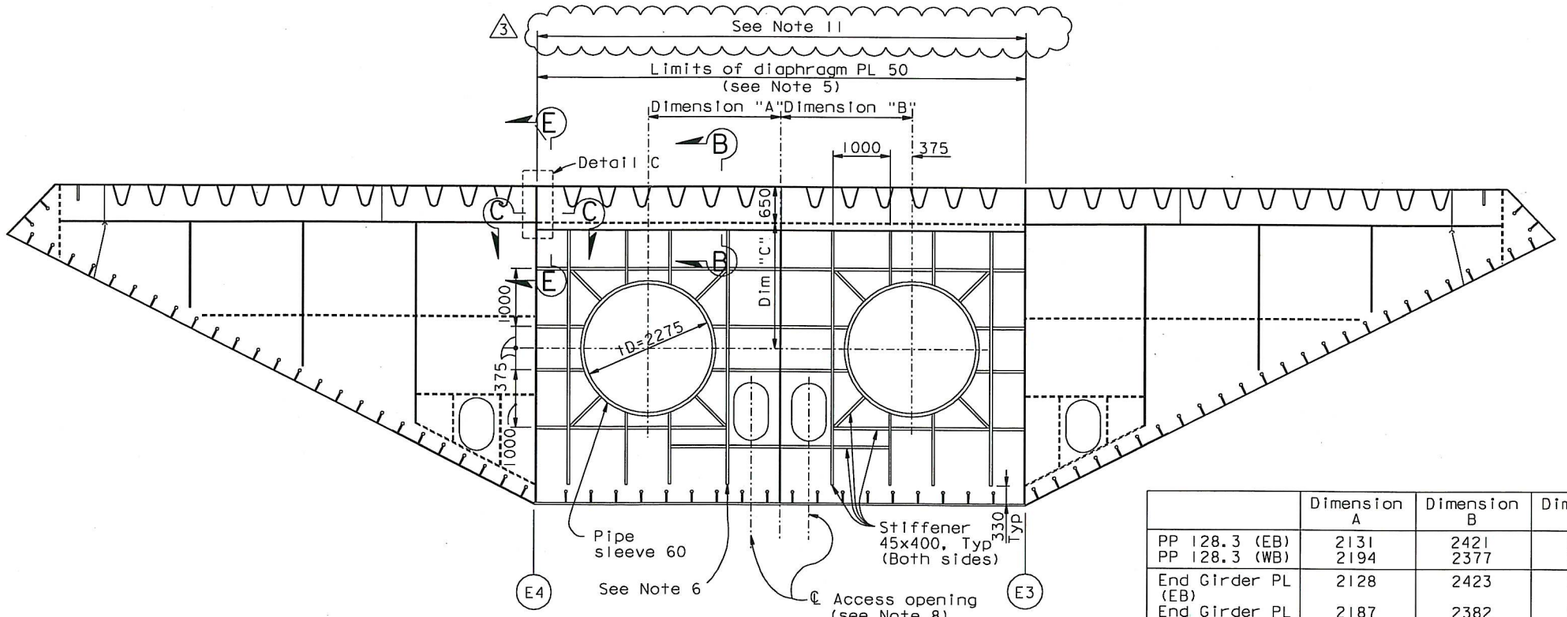

PP 128.3

	Dimension A	Dimension B	Dimension C
PP 128.3 (EB)	2131	2421	2138
PP 128.3 (WB)	2194	2377	2119
End Girder PL (EB)	2128	2423	2134
End Girder PL (WB)	2187	2382	2122

LEGEND:

Field installed panel

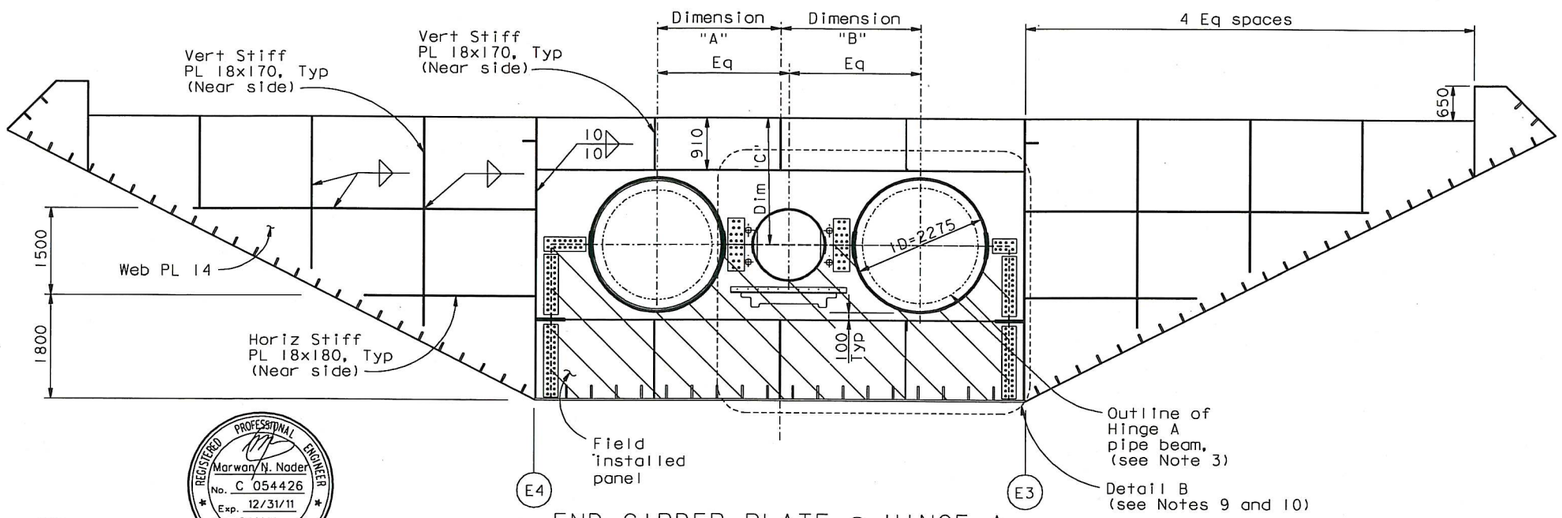

END GIRDER PLATE @ HINGE A

"E" LINE SECTION (See Note 1)
1:50

NOTES:

1. "E" Line girder is shown, "W" Line girder is similar. For both "E" Line and "W" Line, Dimension A shall be taken to the North of CL girder and Dimension B to the South of the CL girder.
2. The two side portions of floorbeam at PP128.3 and the end girder plate are similar to the typical floorbeam. For details not shown, see "Typical Floorbeam Details No.1" sheet.
3. For details of pipe beam, see "Hinge A Details" sheets.
4. For details of access opening, see "Typical Girder Details No.7" sheet.
5. Diaphragm layout is similar to diaphragm at PP 127. See "Floorbeam At East Transition No.8" sheet. For other details not shown, see "Hinge A Details" sheets.
6. Stiffener transition radius is 600 mm. For other stiffener transition details, see "Typical Girder Details No.16" sheet.
7. Deleted.
8. Center access openings between adjacent stiffeners.
9. For Sections B-B, C-C and E-E, and "Detail B" and Detail C" see "Floorbeam At East Transition No.11" sheet.
10. For catwalk at PP128.7, see "Girder Access Details No.13" sheet.
11. Weld of diaphragm PL 50 to girder PL A shall be PJP (25) full length. (3)

REGISTERED PROFESSIONAL ENGINEER Marwan N. Nader No. C 054426 Exp. 12/31/11 CIVIL STATE OF CALIFORNIA

FOR REVISION (3) ONLY

REGISTERED PROFESSIONAL ENGINEER Daniel J. Turner No. C 65033 Exp. 06/30/13 CIVIL STATE OF CALIFORNIA

FOR REVISIONS (1) & (2) ONLY

CONTRACT CHANGE ORDER NO. 87
SHEET 70 OF 115

REQUESTS FOR INFORMATION NOT ADDRESSED IN THIS CCO REMAIN IN FORCE

MARK	DATE	DESCRIPTIONS	BY	CH'D	CCO#
3	09/01/11	EAST END OBG	MN	DT	87
2	06/10/11	ADDITIONAL ACCESS AT EAST END	DT	GB	202
1	04/09/10	HINGE A MODIFICATIONS	GB	MN	120

REVISIONS

R. Vallizadeh/V. Toan/Y.L./W.L./F.C.
DESIGN OVERSIGHT
SIGN OFF DATE 09/01/11

Rev. Date: 5-18-98

DESIGN BY G. Baker CHECKED P. Ritchie
DETAILS BY M. Gulyas CHECKED T. McMeans
QUANTITIES BY C. Mauch CHECKED M. Roberts

PREPARED FOR THE STATE OF CALIFORNIA DEPARTMENT OF TRANSPORTATION

R. Manzanarez
PROJECT ENGINEER

ALL DIMENSIONS ARE IN MILLIMETERS UNLESS OTHERWISE SHOWN

ORIGINAL SCALE IN MILLIMETERS FOR REDUCED PLANS 0 10 20 30 40 50 60 70 80 90 100

CU 04
EA 0120F1

BRIDGE NO. 34-0006L/R
KILOMETER POST 13.2/13.9

DISREGARD PRINTS BEARING EARLIER REVISION DATES

SAN FRANCISCO OAKLAND BAY BRIDGE
EAST SPAN SEISMIC SAFETY PROJECT
SELF-ANCHORED SUSPENSION BRIDGE
(SUPERSTRUCTURE & TOWER)

FLOORBEAM AT EAST TRANSITION NO. 10

REVISION DATES (PRELIMINARY STAGE ONLY) 01/15/99 05/15/99 08/07/99 05/13/01 01/08/02 07/26/02 12/13/02 05/16/03 09/06/04

SHEET 297R3 OF

FILE => I:\bb\04-012001\sas\contract plans and cco\cco\cco#87\1-original 09-01-11\dgn\agefd06f-r1.dgn

USERNAME => PTom DATE PLOTTED => 30 AUG 2011 TIME PLOTTED => 11:41:23

100 % PS&E

DIST.	COUNTY	ROUTE	KILOMETER POST TOTAL PROJECT	SHEET NO.	TOTAL SHEETS
04	SF	80	13.2/13.9	715R1	1204

Caltrans Metric

George Baker
REGISTERED ENGINEER - CIVIL
12-6-04
PLANS APPROVAL DATE

REGISTERED PROFESSIONAL ENGINEER George S. Baker No. C57112 Exp. 12/31/05 CIVIL STATE OF CALIFORNIA

The State of California or its officers or agents shall not be responsible for the accuracy or completeness of electronic copies of this plan sheet.

T.Y. LIN / MOFFATT & NICHOL
825 BATTERY STREET
SAN FRANCISCO, CA 94111

Caltrans now has a web site! To get to the web site, go to: http://www.dot.ca.gov

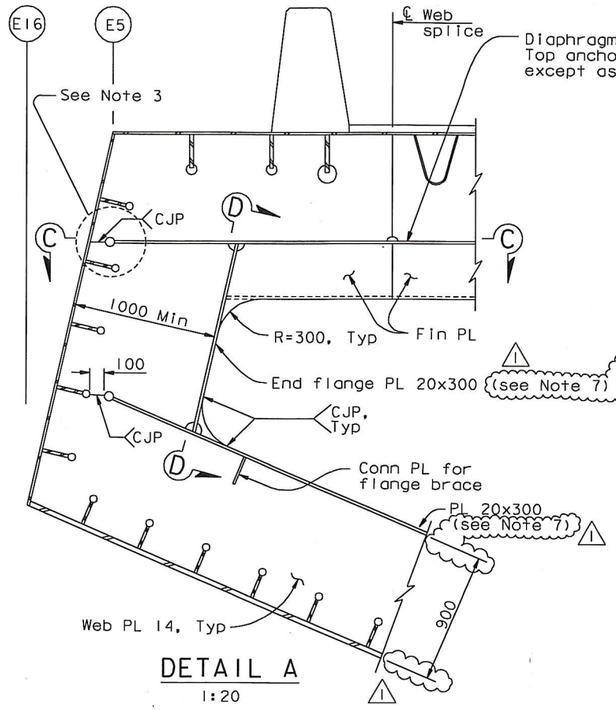

DETAIL A
1:20

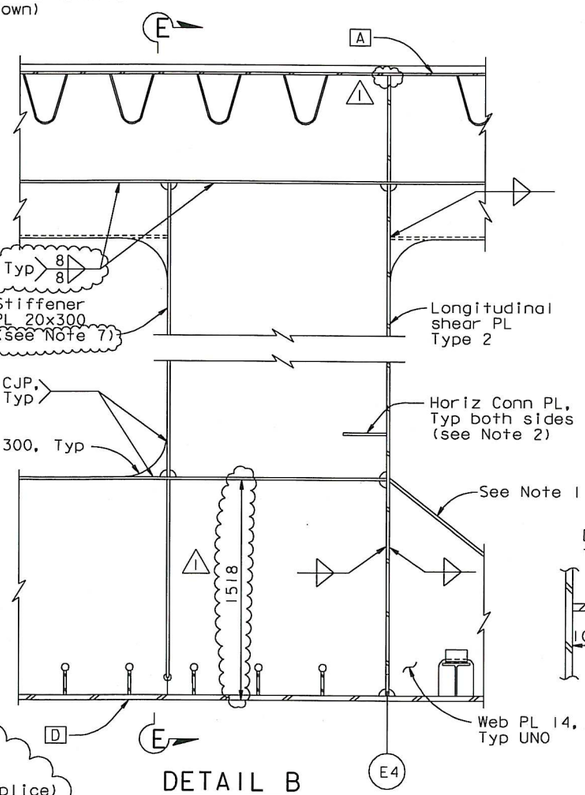

DETAIL B
1:20

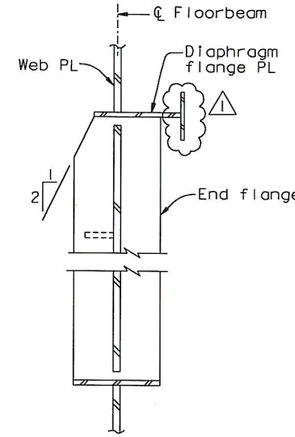

SECTION D-D
1:10

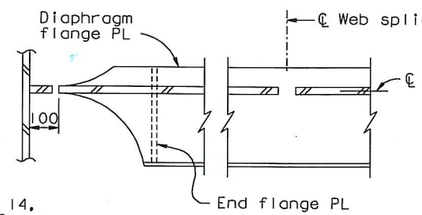

SECTION C-C
1:10

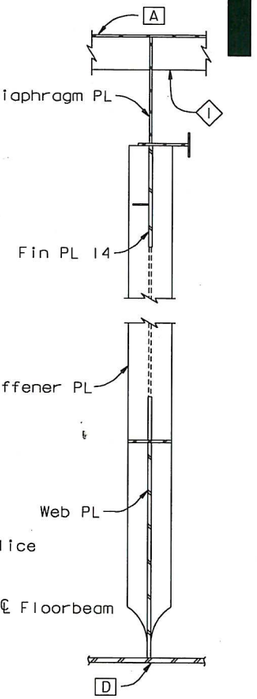

SECTION E-E
1:20

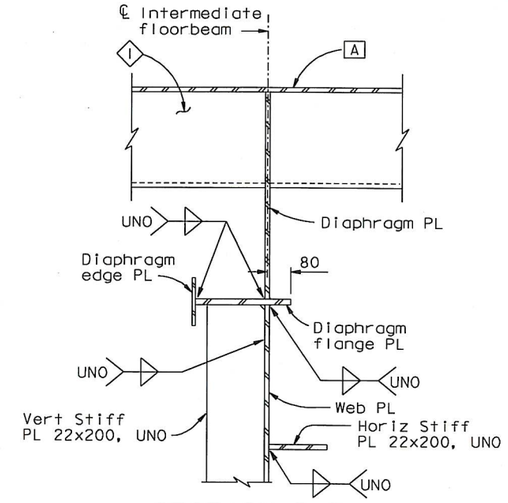

SECTION B-B
1:10

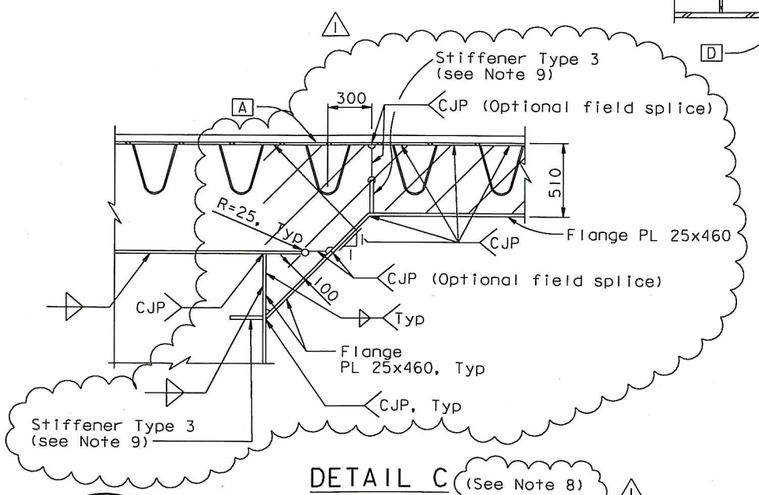

DETAIL C
1:20

(See Note 8)

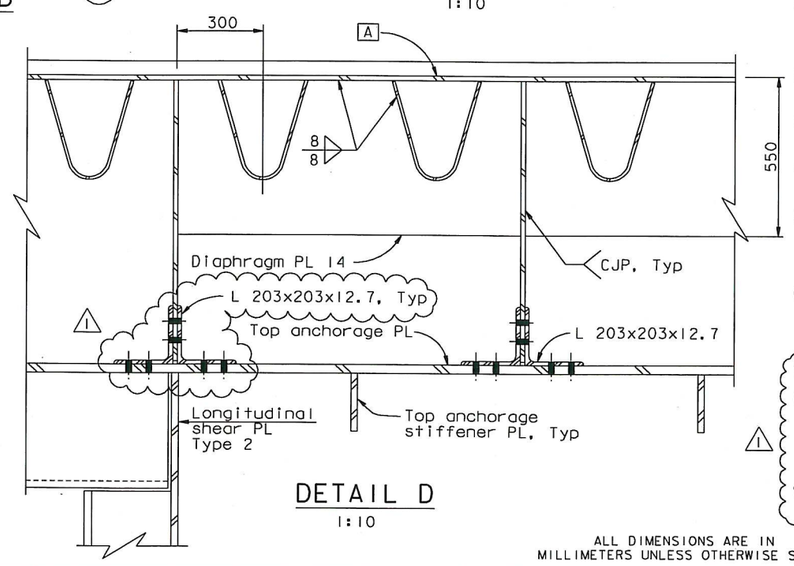

DETAIL D
1:10

NOTES:

1. For details not shown, see "Typical Floorbeam Details" sheets.
2. For horizontal connection PL detail at longitudinal shear PL, see "Typical Girder Details No.9" sheet.
3. For details of top anchorage PL through girder at crossbeam, see "Crossbeam At East Anchorage" sheets.
4. For details of stiffener Type 1, see "Typical Girder Details No.4" sheet.
5. For "Floorbeam At East Transition Details" sheets, all bolts shall be detailed according to the Bolt Dimension Table. See "Typical Girder Details No.1" sheet. All bolts are HS UNO.
6. For "Floorbeam At East Transition Details" sheets UNO, all fillet welds shall be 6 mm for plate sizes not greater than 20 mm. For plates greater than 20 mm, fillet welds shall be 8 mm UNO.
7. In lieu of PL 20x300, two PL 20x145 may be used.
8. For flanges of cable opening, two PL 25x225 may be used in lieu of PL 25x460. In this case, the CJP flange weld in each flange shall be extended 100 mm and the fillet welds for the lower flanges shall overlap the CJP welds in the extension.
9. For stiffener Type 3, see "Floorbeam At East Transition Details No.3" sheet.

ALL DIMENSIONS ARE IN MILLIMETERS UNLESS OTHERWISE SHOWN

REGISTERED PROFESSIONAL ENGINEER Marwan N. Nader No. C 054426 Exp. 12/31/11 CIVIL STATE OF CALIFORNIA

FOR REVISIONS ONLY

CONTRACT CHANGE ORDER NO. 87
SHEET 71 OF 115

REQUESTS FOR INFORMATION NOT ADDRESSED IN THIS CCO REMAIN IN FIRST

R. Vallizadeh/V. Toan/Y.L./W.L./F.C.
DESIGN OVERSIGHT
SIGN OFF DATE 09/01/11

MARK	DATE	DESCRIPTIONS	BY	CH'D	CCO#
1	09/01/11	EAST END OBG	GB	MN	87

REVISIONS

DESIGN	BY G. Baker	CHECKED	P. Ritchie
DETAILS	BY M. Gulyas	CHECKED	T. McMeans
QUANTITIES	BY C. Mauch	CHECKED	M. Roberts

PREPARED FOR THE STATE OF CALIFORNIA DEPARTMENT OF TRANSPORTATION

R. Manzanarez
PROJECT ENGINEER

BRIDGE NO. 34-0006L/R
KILOMETER POST 13.2/13.9

SAN FRANCISCO OAKLAND BAY BRIDGE
EAST SPAN SEISMIC SAFETY PROJECT
SELF-ANCHORED SUSPENSION BRIDGE
(SUPERSTRUCTURE & TOWER)

FLOORBEAM AT EAST TRANSITION DETAILS NO. 1

Rev. Date: 5-18-98

ORIGINAL SCALE IN MILLIMETERS FOR REDUCED PLANS 0 10 20 30 40 50 60 70 80 90 100

CU 04
EA 0120F1

DISREGARD PRINTS BEARING EARLIER REVISION DATES

REVISION DATES (PRELIMINARY STAGE ONLY) 05/15/99 09/28/99 05/31/01 01/08/02 07/09/02 12/19/02 11/13/05

SHEET 298R1 OF

FILE => I:\bb\04-012001\sas\contract plans and cco\cco\cco#87\1-original 09-01-11\dgn\agefd13.dgn

USERNAME => ALishonsky DATE PLOTTED => 30 AUG 2011 TIME PLOTTED => 09:54:08

100% PS&E

DIST.	COUNTY	ROUTE	KILOMETER POST TOTAL PROJECT	SHEET NO.	TOTAL SHEETS
04	SF	80	13.2/13.9	716R1	1204

George Baker
REGISTERED ENGINEER - CIVIL
12-6-04
PLANS APPROVAL DATE

REGISTERED PROFESSIONAL ENGINEER George S. Baker No. C57112 Exp. 12/31/05 CIVIL STATE OF CALIFORNIA

The State of California or its officers or agents shall not be responsible for the accuracy or completeness of electronic copies of this plan sheet.

T.Y. LIN / MOFFATT & NICHOL
825 BATTERY STREET
SAN FRANCISCO, CA 94111

Caltrans now has a web site! To get to the web site, go to: http://www.dot.ca.gov

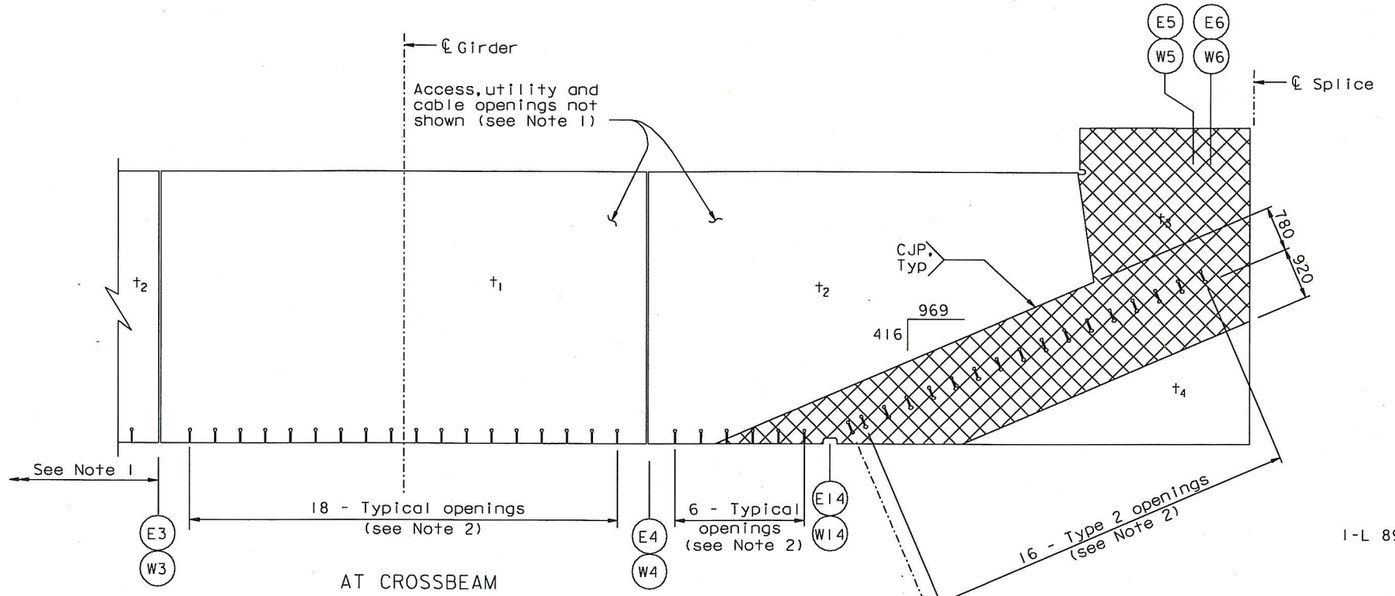

AT CROSSBEAM

FLOORBEAM WEB LAYOUT

1:50

FLOORBEAM WEB THICKNESS TABLE				
PP	t_1	t_2	t_3	t_4
118	18	18	22	18
120	20	20	25	20
125	20	20	25	20
126	30	20	25	20
127	25	18	22	18

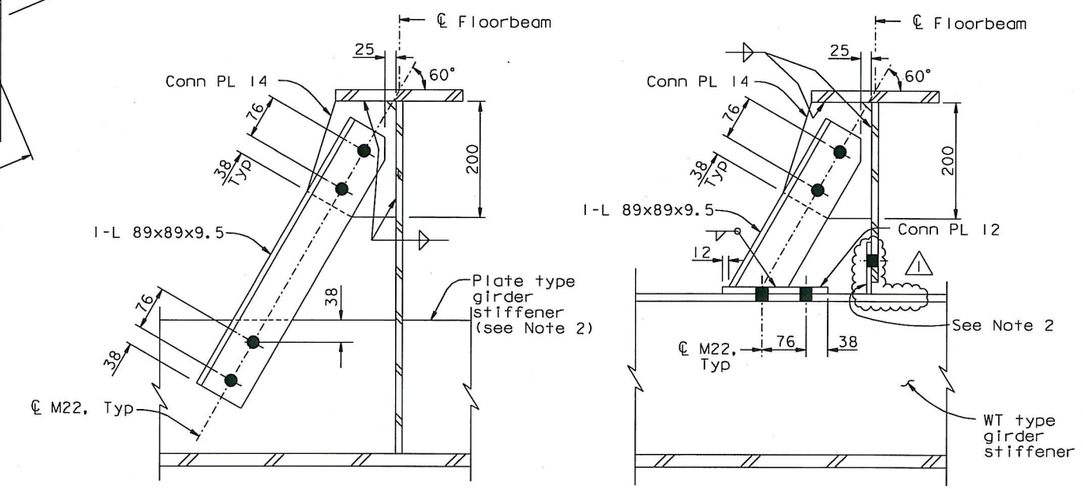

PLATE TYPE STIFFENER

WT TYPE STIFFENER

FLANGE BRACE DETAIL

1:5

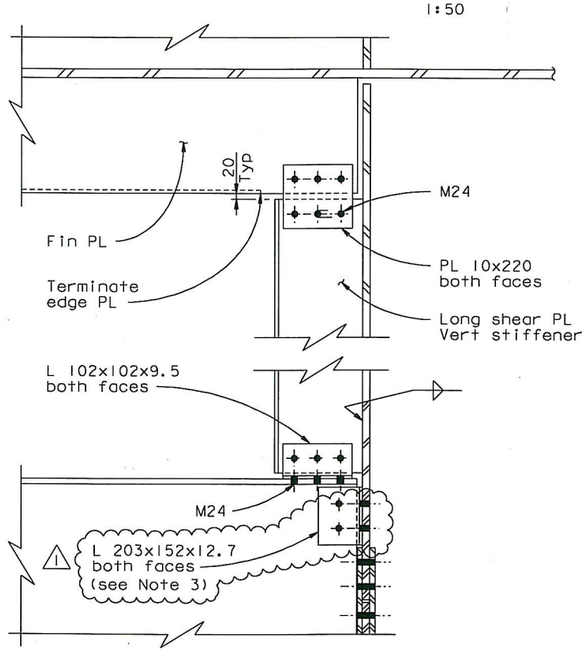

DETAIL F

1:10

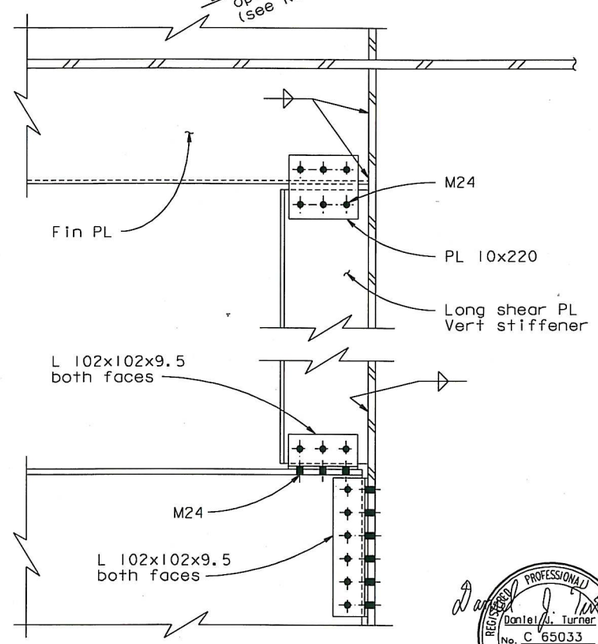

DETAIL E

1:10

LEGEND:

"Indicates SPCM & TTP, web PL"

NOTES:

1. For locations of openings and details of floorbeams not shown, see "Floorbeam At East Transition" sheets.
2. For details of girder stiffener opening at floorbeams, see "Typical Girder Details No. 6" sheet.
3. At the Contractor's option, ASTM A992 or ASTM A572 Gr 345 may be used in lieu of ASTM A709 for the L 203x152x12.7.

CONTRACT CHANGE ORDER NO. 87
SHEET 72 OF 115

REQUESTS FOR INFORMATION NOT ADDRESSED IN THIS CCO REMAIN IN FORCE

REGISTERED PROFESSIONAL ENGINEER Daniel J. Turner No. C 65033 Exp. 06/30/13 CIVIL STATE OF CALIFORNIA

FOR REVISIONS ONLY

ALL DIMENSIONS ARE IN MILLIMETERS UNLESS OTHERWISE SHOWN

100 % PS&E

TIME PLOTTED => 09:56:11
DATE PLOTTED => 30 AUG 2011
USERNAME => ALishanskS

R. Valizadeh/V. Toan/Y.L./W.L./F.C.
DESIGN OVERSIGHT
Roger Valizadeh / Vong Toan / Y Liu
SIGN OFF DATE 09/01/11

MARK	DATE	DESCRIPTIONS	BY	CH'D	CCO#
1	09/01/11	EAST END OBG	DT	GB	87

REVISIONS

	BY	CHECKED	
DESIGN	G. Baker	CHECKED	P. Ritchie
DETAILS	M. Gulyas	CHECKED	T. McMeans
QUANTITIES	C. Mauch	CHECKED	M. Roberts

PREPARED FOR THE STATE OF CALIFORNIA DEPARTMENT OF TRANSPORTATION

R. Manzanarez
PROJECT ENGINEER

BRIDGE NO. 34-0006L/R
KILOMETER POST 13.2/13.9

SAN FRANCISCO OAKLAND BAY BRIDGE
EAST SPAN SEISMIC SAFETY PROJECT
SELF-ANCHORED SUSPENSION BRIDGE
(SUPERSTRUCTURE & TOWER)

FLOORBEAM AT EAST TRANSITION DETAILS NO. 2

Rev. Date: 5-18-98

ORIGINAL SCALE IN MILLIMETERS FOR REDUCED PLANS 0 10 20 30 40 50 60 70 80 90 100

CU 04
EA 0120F1

DISREGARD PRINTS BEARING EARLIER REVISION DATES

REVISION DATES (PRELIMINARY STAGE ONLY) 08/08/99 05/17/01 01/08/02 07/09/02 12/15/02

SHEET 299R1 OF

FILE => I:\bb\04-012001\sas\contract plans and cco\cco\cco#87\1-original 09-01-11\dgn\agefd14.dgn

DIST.	COUNTY	ROUTE	KILOMETER POST TOTAL PROJECT	SHEET NO.	TOTAL SHEETS
04	SF	80	13.2/13.9	716S1	1204

REGISTERED ENGINEER - CIVIL

09-01-11

PLANS APPROVAL DATE

REGISTERED PROFESSIONAL ENGINEER Marwan N. Nader No. C 054426 Exp. 12/31/11 CIVIL STATE OF CALIFORNIA

The State of California or its officers or agents shall not be responsible for the accuracy or completeness of electronic copies of this plan sheet.

T.Y. LIN / MOFFATT & NICHOL
825 BATTERY STREET
SAN FRANCISCO, CA 94111

Caltrans now has a web site! To get to the web site, go to: http://www.dot.ca.gov

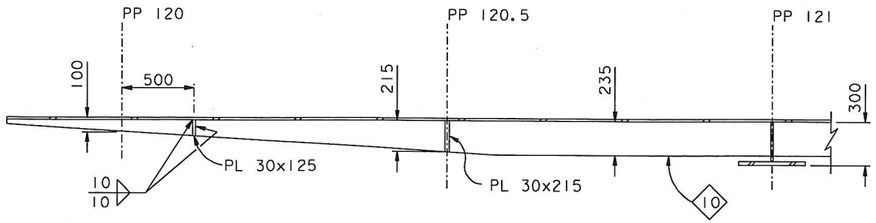

SECTION X-X
1:20

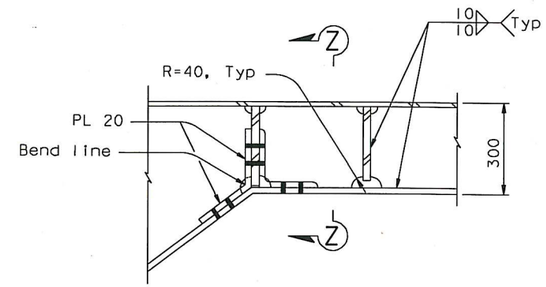

DETAIL H
1:10

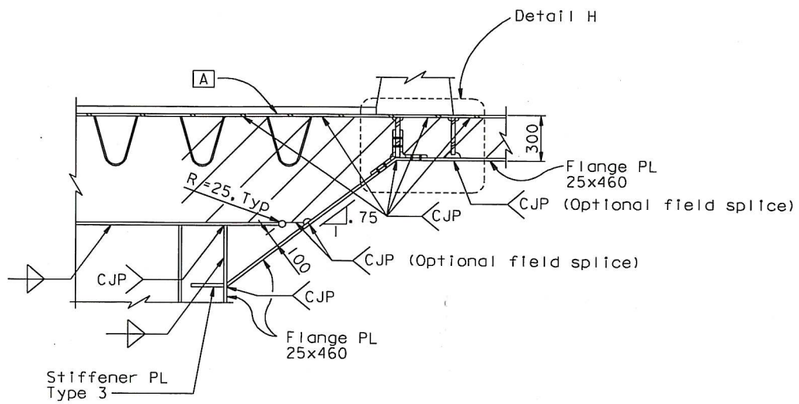

DETAIL N (@ PP 121)
1:20

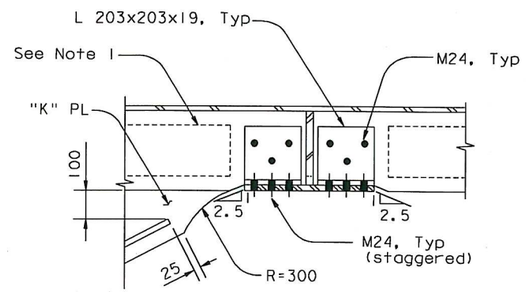

SECTION Z-Z (Detail F similar)
1:10

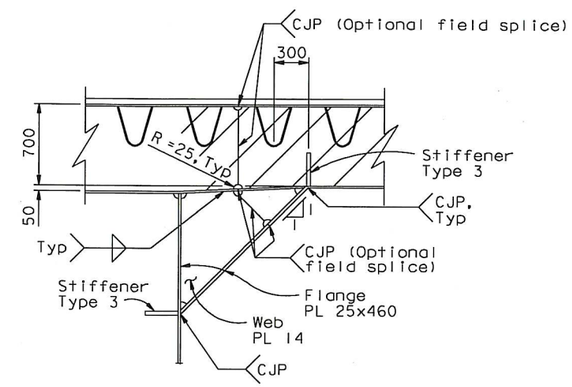

DETAIL G (@ PP 123)
1:25

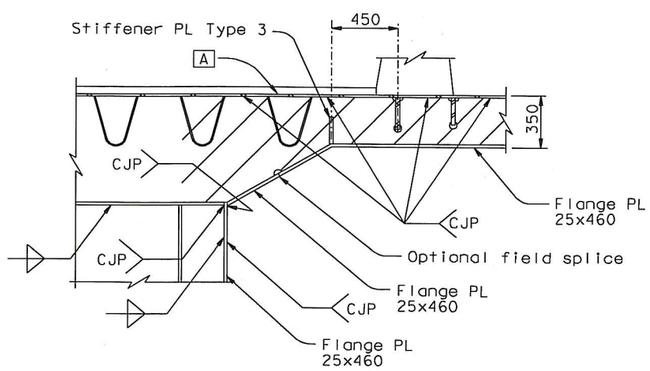

DETAIL M (@ PP 121.5)
1:20

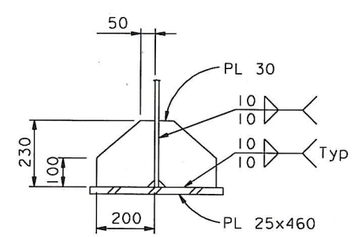

STIFFENER PLATE
TYPE 3 DETAIL
1:5

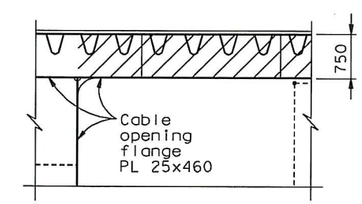

DETAIL J (@ PP 123.5)
1:25

NOTES:

1. Barrier connection not shown.

CONTRACT CHANGE ORDER NO. 87
SHEET 73 OF 115

REQUESTS FOR INFORMATION NOT ADDRESSED IN THIS CCO REMAIN IN FORCE

ALL DIMENSIONS ARE IN MILLIMETERS UNLESS OTHERWISE SHOWN

R. Vallizadeh/V. Toan/Y.L./W.L./F.C.
DESIGN OVERSIGHT
SIGN OFF DATE 09/01/11

MARK	DATE	DESCRIPTIONS	BY	CH'D	CCO#
0	09/01/11	EAST END OBG	GB	MN	87

REVISIONS

	BY	CHECKED
DESIGN	G. Baker	M. Nader
DETAILS	G. Baker	M. Nader
QUANTITIES	G. Baker	M. Nader

PREPARED FOR THE STATE OF CALIFORNIA DEPARTMENT OF TRANSPORTATION

R. Manzanarez
PROJECT ENGINEER

BRIDGE NO. 34-0006L/R
KILOMETER POST 13.2/13.9

SAN FRANCISCO OAKLAND BAY BRIDGE
EAST SPAN SEISMIC SAFETY PROJECT
SELF-ANCHORED SUSPENSION BRIDGE
(SUPERSTRUCTURE & TOWER)

FLOORBEAM AT EAST TRANSITION DETAILS NO. 3

Rev. Date: 5-18-98

ORIGINAL SCALE IN MILLIMETERS FOR REDUCED PLANS 0 10 20 30 40 50 60 70 80 90 100

CU 04
EA 0120F1

DISREGARD PRINTS BEARING EARLIER REVISION DATES 09/01/11

REVISION DATES (PRELIMINARY STAGE ONLY)

SHEET 299S1 OF

FILE => I:\bb\04-012001\sas\contract plans and cco\cco\cco#87\1-original 09-01-11\dgn\agefd14a.dgn

100 % PS&E

USERNAME => ALishansky DATE PLOTTED => 30 AUG 2011 TIME PLOTTED => 09:59:43

DIST.	COUNTY	ROUTE	KILOMETER POST TOTAL PROJECT	SHEET NO.	TOTAL SHEETS
04	SF	80	13.2/13.9	717R1	1204

Caltrans Metric

George Baker
REGISTERED ENGINEER - CIVIL

12-6-04
PLANS APPROVAL DATE

REGISTERED PROFESSIONAL ENGINEER George S. Baker No. C 57112 Exp. 12/31/05 CIVIL STATE OF CALIFORNIA

The State of California or its officers or agents shall not be responsible for the accuracy or completeness of electronic copies of this plan sheet.

T.Y. LIN / MOFFATT & NICHOL
825 BATTERY STREET
SAN FRANCISCO, CA 94111

Caltrans now has a web site! To get to the web site, go to: http://www.dot.ca.gov

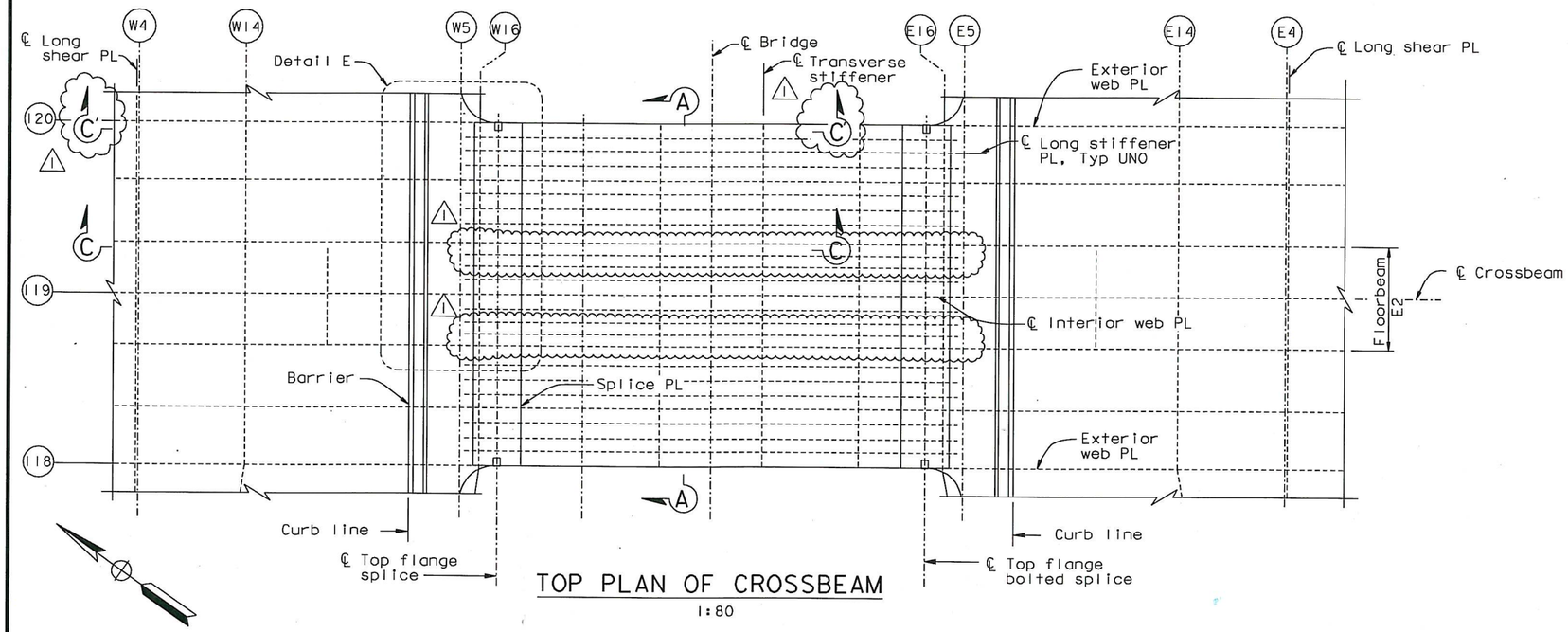

TOP PLAN OF CROSSBEAM
1:80

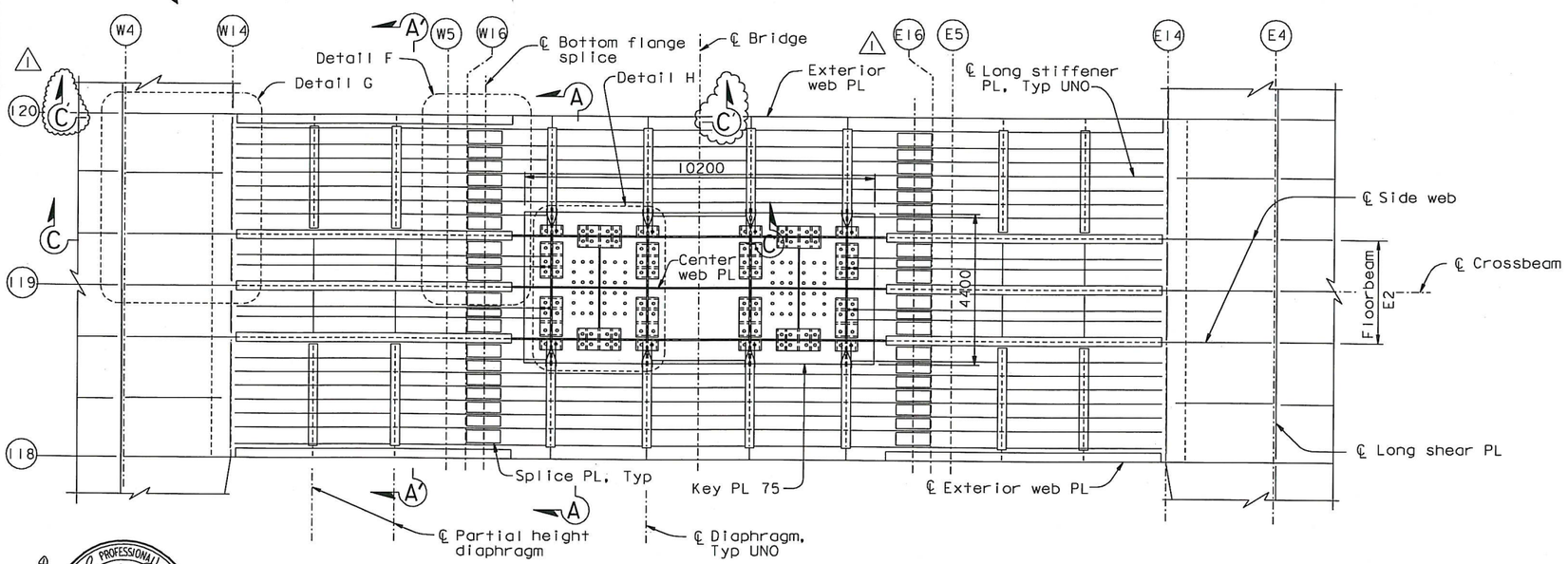

BOTTOM PLAN OF CROSSBEAM
1:80

NOTES:

1. For details not shown, see "Typical Crossbeam Details" sheets.
2. For Section C-C, see "Crossbeam At Pier E2 No.6" sheet. For Section C'-C', see "Crossbeam At Pier E2 No.6A" sheet.
3. For locations of W14, W16, E14 & E16, see "Girder At East Transition No. 1" and "Girder At East Transition No.3" sheets.
4. For all "Crossbeam At Pier E2" sheets, all bolts shall be detailed according to the Bolt Dimension Table. See "Typical Girder Details No.1" sheet. All bolts are HS unless noted otherwise.
5. For "Crossbeam At Pier E2" sheets unless noted otherwise, all fillet welds shall be 6 mm for plate sizes not greater than 20 mm. For plates greater than 20 mm, fillet welds shall be 8 mm unless noted otherwise.
6. For Detail E, see "Crossbeam At Pier E2 No.4" sheet.
7. For Detail F, see "Crossbeam At Pier E2 No.5" sheet.
8. For Detail G, see "Crossbeam At Pier E2 No.7" sheet.
9. For Sections A-A and A'-A', see "Crossbeam At Pier E2 No.2" sheet.

Daniel J. Turner
REGISTERED PROFESSIONAL ENGINEER Daniel J. Turner No. C 65033 Exp. 06/30/13 CIVIL STATE OF CALIFORNIA

FOR REVISIONS ONLY

CONTRACT CHANGE ORDER NO. 87
SHEET 74 OF 115

REQUESTS FOR INFORMATION NOT ADDRESSED IN THIS CCO REMAIN IN FORCE

ALL DIMENSIONS ARE IN MILLIMETERS UNLESS OTHERWISE SHOWN

R. Vallzadeh/V. Toan/Y.L./W.L./F.C.
DESIGN OVERSIGHT
Roya Vallzadeh / Vong Toan / Y. Liu
SIGN OFF DATE 09/01/11

MARK	DATE	DESCRIPTIONS	BY	CH'D	CCO#
1	09/01/11	EAST END OBG	DT	GB	87

REVISIONS

	BY	CHECKED
DESIGN	G. Baker	P. Ritchie
DETAILS	D. Veystman	T. McMeans
QUANTITIES	D. Turner	M. Roberts

PREPARED FOR THE STATE OF CALIFORNIA DEPARTMENT OF TRANSPORTATION

R. Manzanarez
PROJECT ENGINEER

BRIDGE NO. 34-0006L/R
KILOMETER POST 13.2/13.9

SAN FRANCISCO OAKLAND BAY BRIDGE
EAST SPAN SEISMIC SAFETY PROJECT
SELF-ANCHORED SUSPENSION BRIDGE
(SUPERSTRUCTURE & TOWER)

CROSSBEAM AT PIER E2 NO. 1

Rev. Date: 5-18-98

ORIGINAL SCALE IN MILLIMETERS FOR REDUCED PLANS 0 10 20 30 40 50 60 70 80 90 100

CU 04
EA 0120F1

DISREGARD PRINTS BEARING EARLIER REVISION DATES

REVISION DATES (PRELIMINARY STAGE ONLY) 05/13/99 05/26/99 05/24/01 01/08/02 07/01/02 12/13/02 12/01/05

SHEET 300R1 OF

FILE => I:\bb\04-0120F1\sas\contract plans and cco\cco\cco#87\1-original 09-01-11\dgn\agcrs05a.dgn

100 % PS&E

DATE PLOTTED => 30 AUG 2011 TIME PLOTTED => 10:21:20

USERNAME => PTam

DIST.	COUNTY	ROUTE	KILOMETER POST TOTAL PROJECT	SHEET NO.	TOTAL SHEETS
04	SF	80	13.2/13.9	718R1	1204

George Baker
REGISTERED ENGINEER - CIVIL
12-6-04
PLANS APPROVAL DATE

REGISTERED PROFESSIONAL ENGINEER George S. Baker No. C 57112 Exp. 12/31/05 CIVIL STATE OF CALIFORNIA

The State of California or its officers or agents shall not be responsible for the accuracy or completeness of electronic copies of this plan sheet.

T.Y. LIN / MOFFATT & NICHOL
825 BATTERY STREET
SAN FRANCISCO, CA 94111

Caltrans now has a web site! To get to the web site, go to: http://www.dot.ca.gov

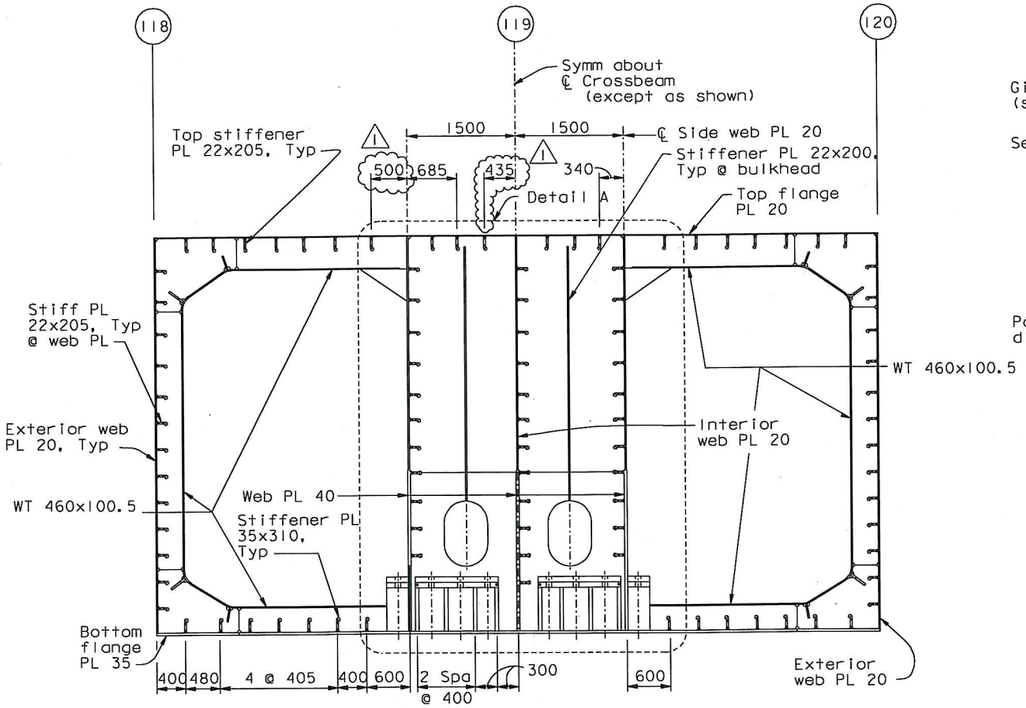

TYPICAL DIAPHRAGM

SECTION A-A

1:40

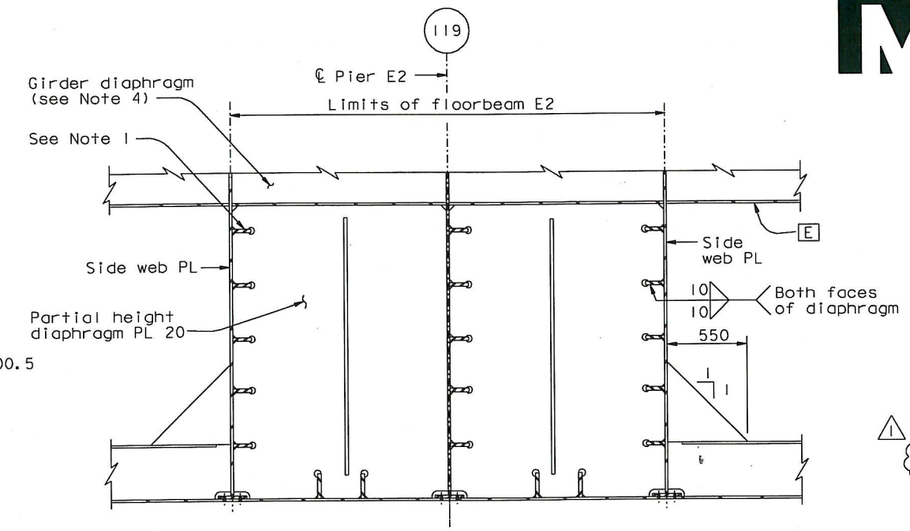

DETAIL B

1:20

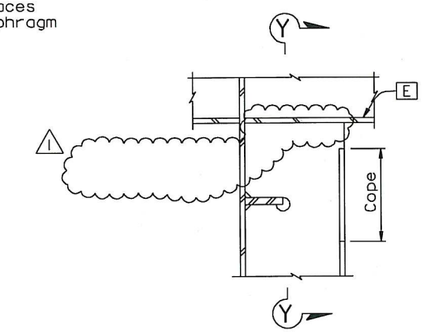

DETAIL C

1:10

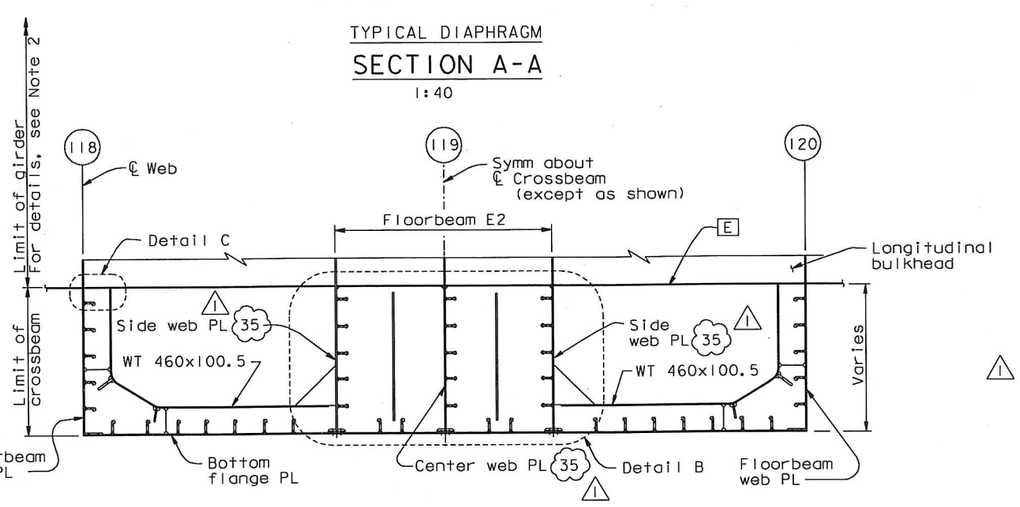

PARTIAL HEIGHT DIAPHRAGM

SECTION A'-A'

1:40

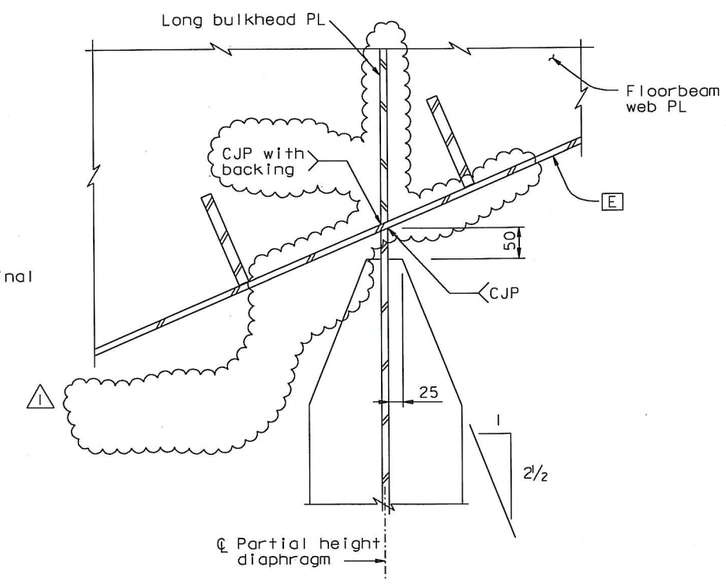

SECTION Y-Y

1:5

NOTES:

1. For details not shown, see "Typical Crossbeam Details" sheets.
2. For girder details, see "Girder At Pier E2" sheets
3. For Detail A, see "Crossbeam At Pier E2 No. 3" sheet.
4. For diaphragm in girder, see "Girder At Pier E2 No. 6" sheet.

REGISTERED PROFESSIONAL ENGINEER Marwan N. Nader No. C 054426 Exp. 12/31/11 CIVIL STATE OF CALIFORNIA

FOR REVISIONS ONLY

CONTRACT CHANGE ORDER NO. 87
SHEET 75 OF 115

REQUESTS FOR INFORMATION NOT ADDRESSED IN THIS CCO REMAIN IN FORCE

ALL DIMENSIONS ARE IN MILLIMETERS UNLESS OTHERWISE SHOWN

MARK	DATE	DESCRIPTIONS	BY	CH'D	CCO#
1	09/01/11	EAST END OBG	GB	MN	87

REVISIONS

R. Valizadeh/V. Toan/Y.L./W.L./F.C.
DESIGN OVERSIGHT
Roya Valizadeh / Vong Toan / Y. Liu
SIGN OFF DATE 09/01/11

Rev. Date: 5-18-98

DESIGN	BY G. Baker	CHECKED	P. Ritchie
DETAILS	BY D. Veytsman	CHECKED	T. McMeans
QUANTITIES	BY D. Turner	CHECKED	M. Roberts

PREPARED FOR THE STATE OF CALIFORNIA DEPARTMENT OF TRANSPORTATION

R. Manzanarez
PROJECT ENGINEER

BRIDGE NO. 34-0006L/R
KILOMETER POST 13.2/13.9

SAN FRANCISCO OAKLAND BAY BRIDGE
EAST SPAN SEISMIC SAFETY PROJECT
SELF-ANCHORED SUSPENSION BRIDGE
(SUPERSTRUCTURE & TOWER)

CROSSBEAM AT PIER E2 NO. 2

ORIGINAL SCALE IN MILLIMETERS FOR REDUCED PLANS 0 10 20 30 40 50 60 70 80 90 100

CU 04
EA 0120F1

DISREGARD PRINTS BEARING EARLIER REVISION DATES

REVISION DATES (PRELIMINARY STAGE ONLY) 05/15/99 08/02/99 05/31/01 04/08/02 07/01/02 12/01/05

SHEET 301R1 OF

FILE => I:\bb\04-01200I\sas\contract plans and cco\cco\cco#87\I-original 09-01-11\dgn\agcrsI3.dgn

100 % PS&E

DATE PLOTTED => 30 AUG 2011 TIME PLOTTED => 10:28:38

USERNAME => PTom

DIST.	COUNTY	ROUTE	KILOMETER POST TOTAL PROJECT	SHEET NO.	TOTAL SHEETS
04	SF	80	13.2/13.9	719R1	1204

Caltrans Metric

George Baker
REGISTERED ENGINEER - CIVIL

12-6-04
PLANS APPROVAL DATE

REGISTERED PROFESSIONAL ENGINEER George S. Baker No. C 57112 Exp. 12/31/05 CIVIL STATE OF CALIFORNIA

The State of California or its officers or agents shall not be responsible for the accuracy or completeness of electronic copies of this plan sheet.

T.Y. LIN / MOFFATT & NICHOL
825 BATTERY STREET
SAN FRANCISCO, CA 94111

Caltrans now has a web site! To get to the web site, go to: http://www.dot.ca.gov

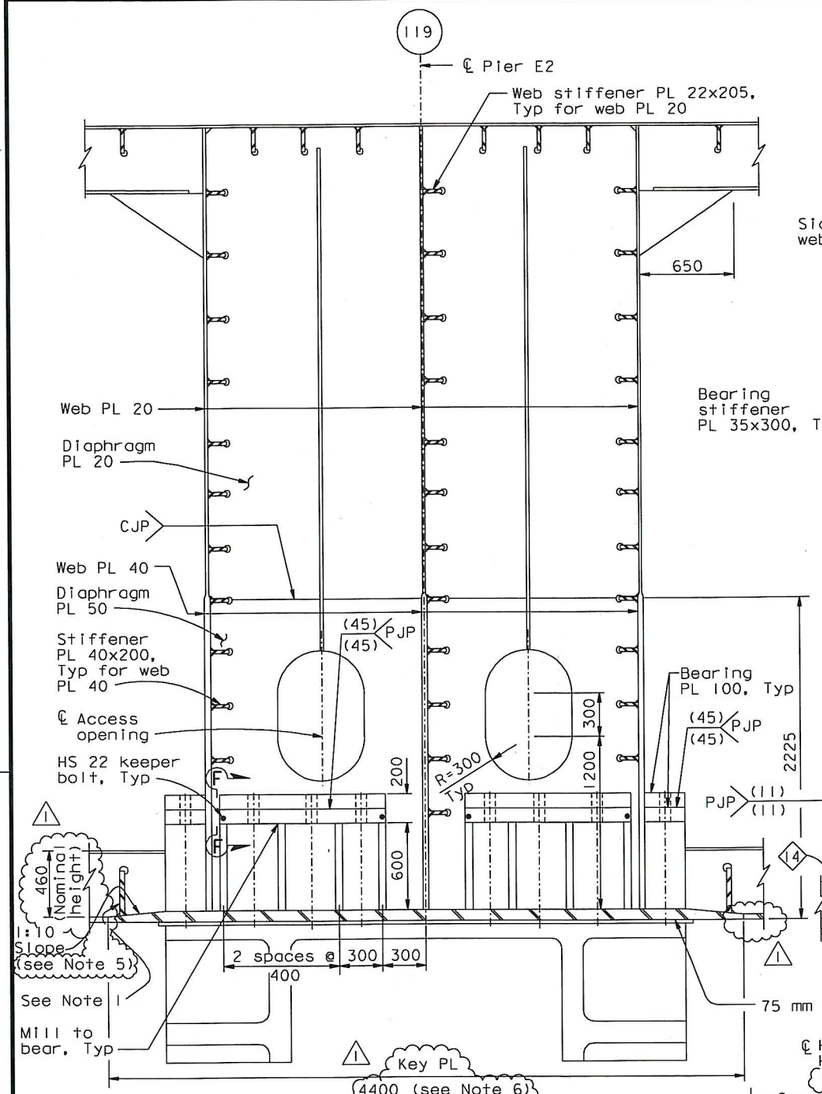

DETAIL A
1:20

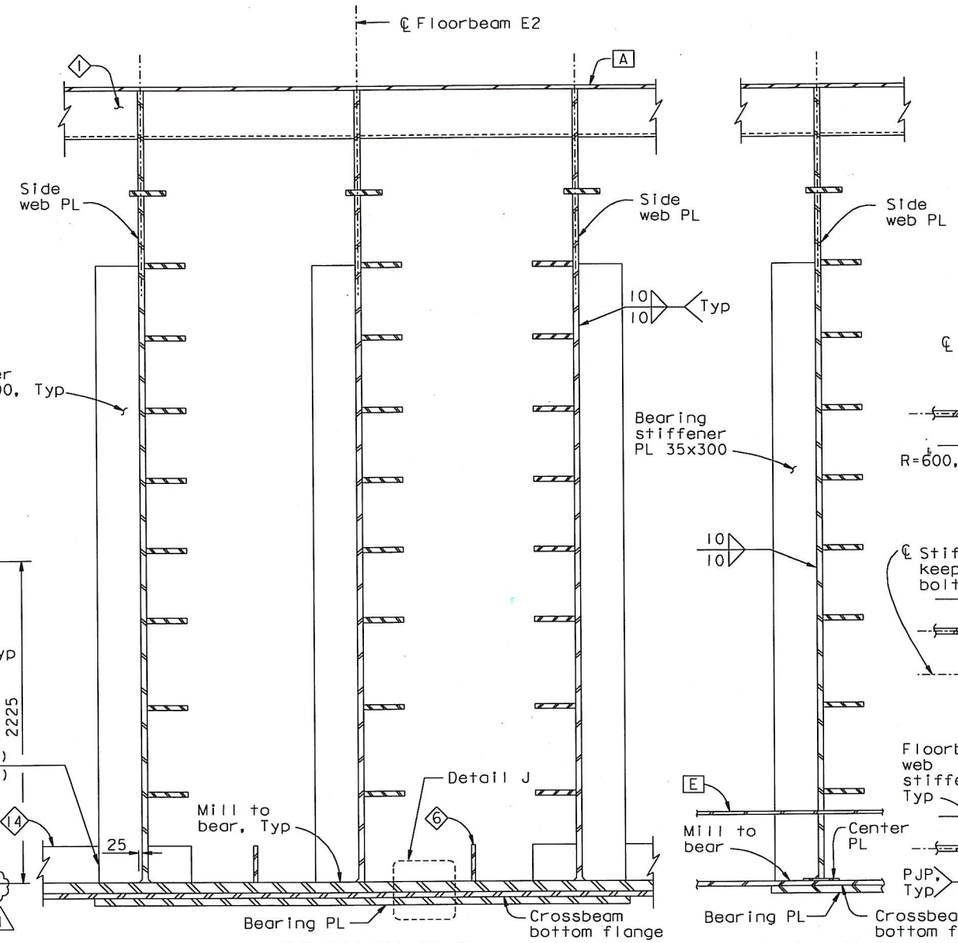

SECTION D-D (See Note 3)
1:20

SECTION E-E (See Note 3)
1:20

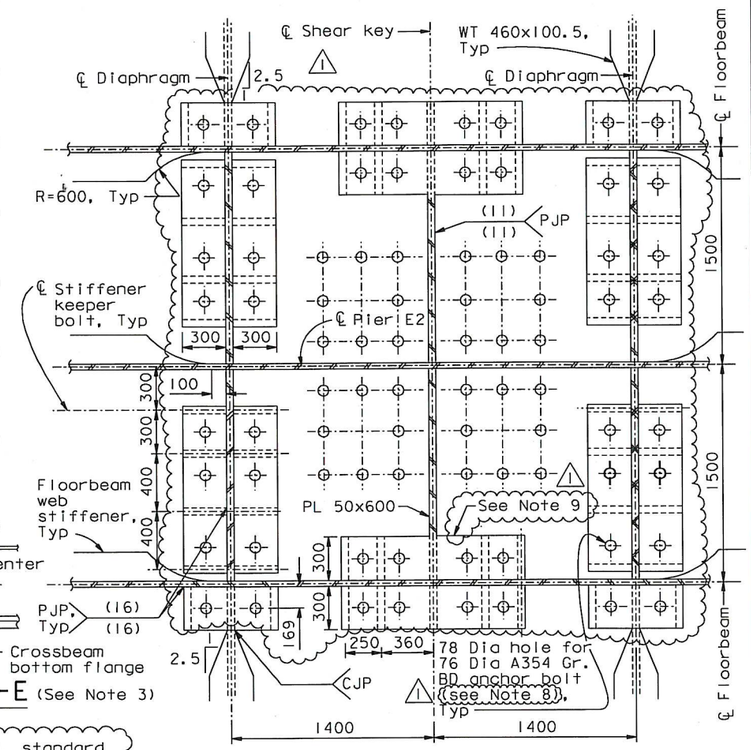

DETAIL H
1:20

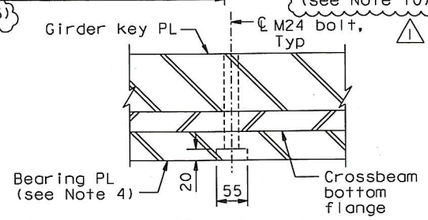

DETAIL J
1:5 (See Note 7)

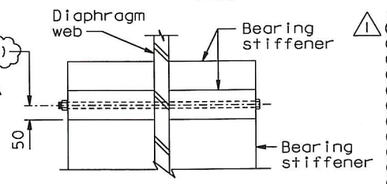

SECTION F-F
1:10

7. At the Contractor's option, standard oversized holes may be used in the key PL and the temporary bearing PL. For this option, a counterbore diameter of 61 mm and a counterbore depth of 25 mm shall be provided.
8. At the Contractor's option, 100 Dia holes may be used in the key PL and bearing PL, subject to review and approval of the Engineer.
9. At the Contractor's option, the top bearing plates may be detailed to overhang the side stiffener plates by 5 mm, subject to review and approval of the Engineer.
10. At the Contractor's option, keeper bolts may be placed in the upper bearing plate. Oversized holes may be used in the bearing plates and vertical plates at keeper bolt locations, subject to review and approval of the Engineer.

NOTES:

1. No weld to diaphragm this face of stiffener.
2. For details not shown, see "Typical Crossbeam Details" sheets.
3. For Section D-D and E-E callouts, see "Crossbeam At Pier E2 No.7" sheet.
4. Bearing PL is counterbored to accomodate bolt heads.
5. Cope WT460 as required over the key PL.
6. At the Contractor's option and subject to review and approval of the Engineer, it is acceptable to use a taper at 1:2.5 slope at the Key PL. The taper shall end 100 clear of the nearest stiffener. Key PL width shall be 4000 Min.

LEGEND:

76 Dia anchor bolt (A354 Gr. BD)

ALL DIMENSIONS ARE IN MILLIMETERS UNLESS OTHERWISE SHOWN

REGISTERED PROFESSIONAL ENGINEER Marwan N. Nader No. C 054426 Exp. 12/31/13 CIVIL STATE OF CALIFORNIA

FOR REVISIONS ONLY

CONTRACT CHANGE ORDER NO. 87
SHEET 76 OF 115

REQUESTS FOR INFORMATION NOT ADDRESSED IN THIS CCO REMAIN IN FRIDAY

R. Valizadeh/V. Toan/Y.L./W.L./F.C.
DESIGN OVERSIGHT
SIGN OFF DATE 04/18/12

MARK	DATE	DESCRIPTIONS	BY	CH'D	CCO#
1	04/18/12	EAST END OBG	MN	GB	87

REVISIONS

DESIGN	G. Baker	CHECKED	P. Ritchie
DETAILS	BY D. Veytsman	CHECKED	T. McMeans
QUANTITIES	BY D. Turner	CHECKED	M. Roberts

PREPARED FOR THE STATE OF CALIFORNIA DEPARTMENT OF TRANSPORTATION

R. Manzanarez
PROJECT ENGINEER

CU 04
EA 0120F1

BRIDGE NO. 34-0006L/R
KILOMETER POST 13.2/13.9

SAN FRANCISCO OAKLAND BAY BRIDGE
EAST SPAN SEISMIC SAFETY PROJECT
SELF-ANCHORED SUSPENSION BRIDGE
(SUPERSTRUCTURE & TOWER)

CROSSBEAM AT PIER E2 NO. 3

DISREGARD PRINTS BEARING EARLIER REVISION DATES
REVISION DATES (PRELIMINARY STAGE ONLY) 05/15/99 08/02/99 05/31/01 04/08/02 07/01/02 12/18/02 12/01/05
SHEET 302R1 OF

Rev. Date: 5-18-98
ORIGINAL SCALE IN MILLIMETERS FOR REDUCED PLANS 0 10 20 30 40 50 60 70 80 90 100

FILE => I:\bb\04-0120FI\sas\contract plans and cco\cco\cco#87\temp\ggcrsl4.dgn

100% PS&E
TIME PLOTTED => 11:23:31
DATE PLOTTED => 18 APR 2012
USERNAME => DWinrow

DIST.	COUNTY	ROUTE	KILOMETER POST TOTAL PROJECT	SHEET NO.	TOTAL SHEETS
04	SF	80	13.2/13.9	720R1	1204

Caltrans Metric

George Baker
REGISTERED ENGINEER - CIVIL
12-6-04
PLANS APPROVAL DATE

REGISTERED PROFESSIONAL ENGINEER George S. Baker No. C57112 Exp. 12/31/05 CIVIL STATE OF CALIFORNIA

The State of California or its officers or agents shall not be responsible for the accuracy or completeness of electronic copies of this plan sheet.

T.Y. LIN / MOFFATT & NICHOL
825 BATTERY STREET
SAN FRANCISCO, CA 94111

Caltrans now has a web site! To get to the web site, go to: http://www.dot.ca.gov

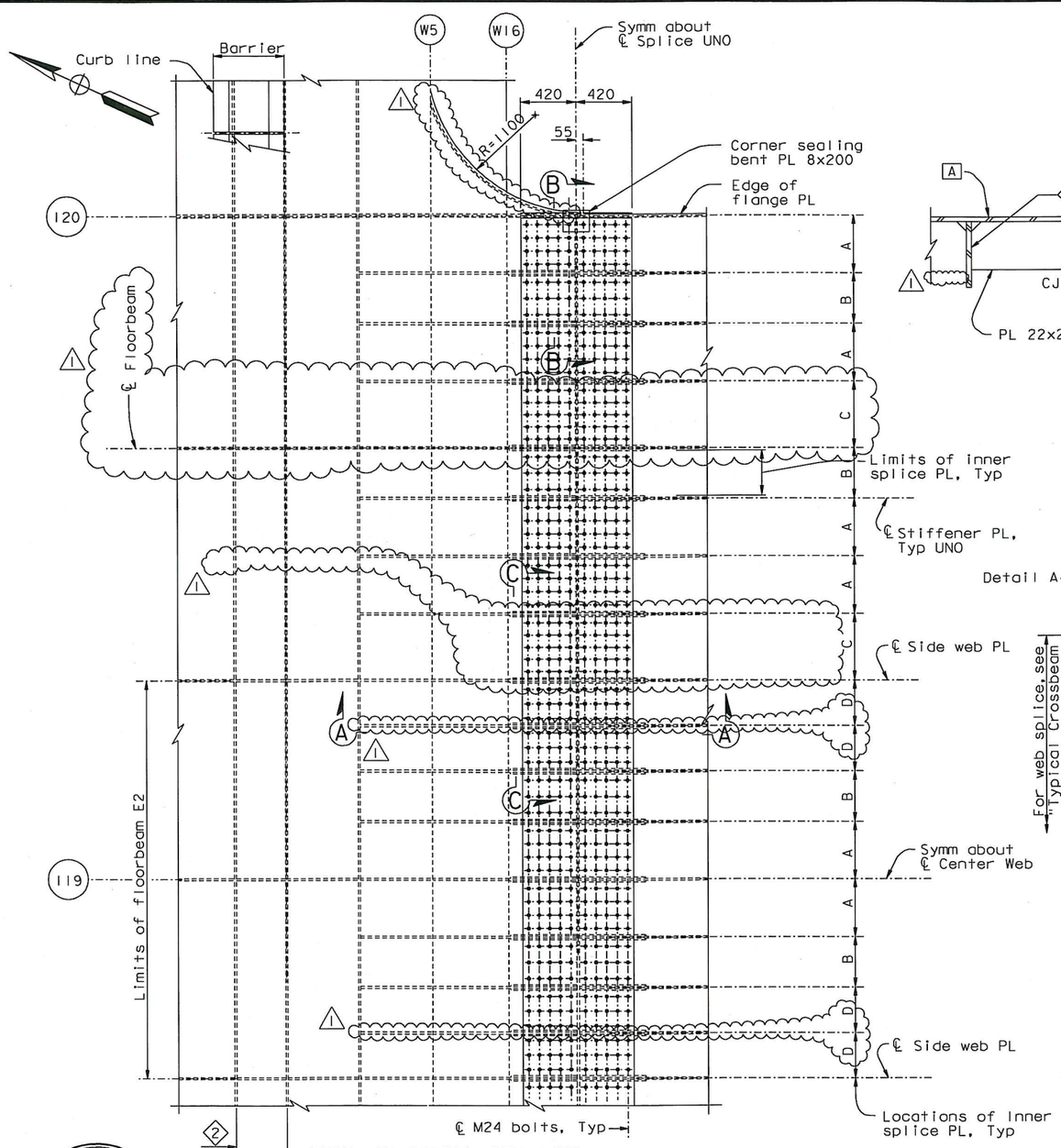

TOP FLANGE SPLICE
DETAIL E
1:20

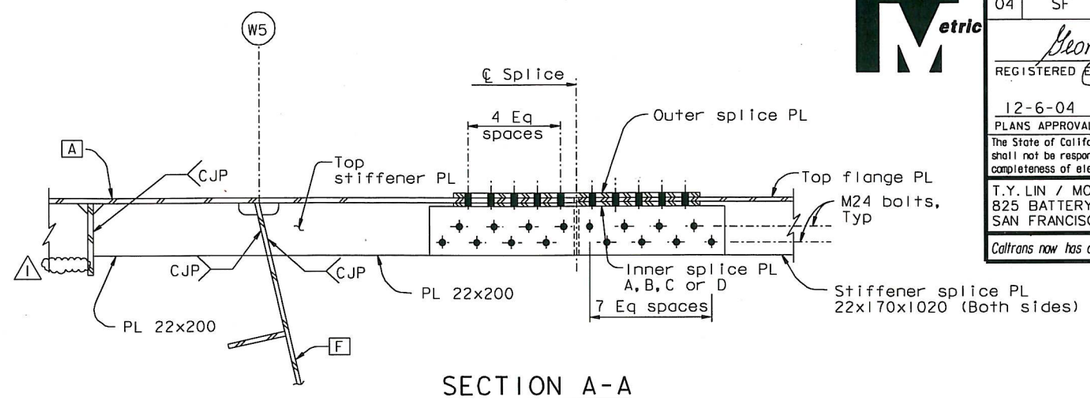

SECTION A-A
1:10

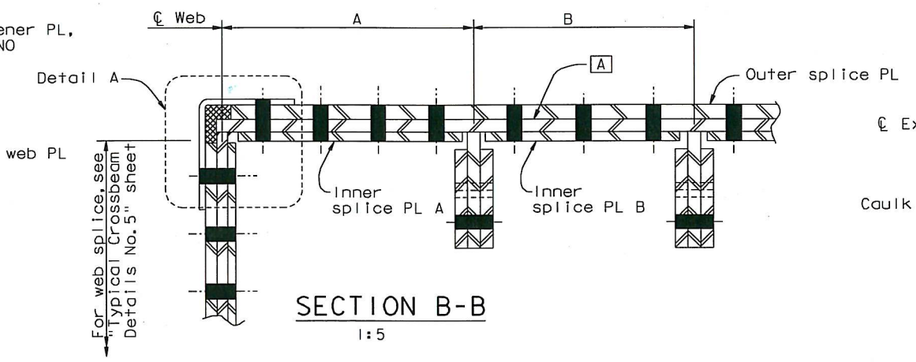

SECTION B-B
1:5

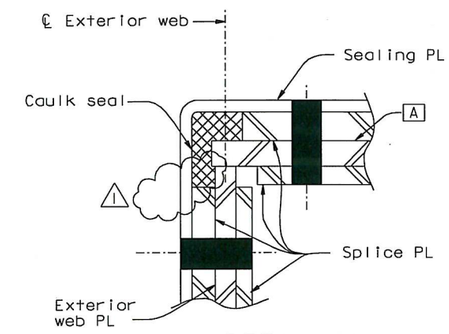

DETAIL A
1:2.5

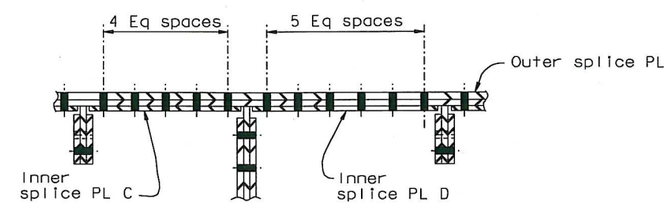

SECTION C-C
1:10

SPLICE PLATE TABLE	
Plate Type	Dimensions
Inner PL "A"	PL 16x900x375
Inner PL "B"	PL 16x900x320
Inner PL "C"	PL 16x900x440
Inner PL "D"	PL 18x900x270
Outer PL	PL 25x900x9960

NOTES:

1. For details not shown, see "Typical Crossbeam Details" sheets.

REGISTERED PROFESSIONAL ENGINEER Daniel J. Turner No. C 65033 Exp. 06/30/13 CIVIL STATE OF CALIFORNIA

FOR REVISIONS ONLY

CONTRACT CHANGE ORDER NO. 87
SHEET 77 OF 115

REQUESTS FOR INFORMATION NOT ADDRESSED IN THIS CCO REMAIN IN FORCE

ALL DIMENSIONS ARE IN MILLIMETERS UNLESS OTHERWISE SHOWN

100 % PS&E

MARK	DATE	DESCRIPTIONS	BY	CH'D	CCO#
1	09/01/11	EAST END OBG	DT	GB	87

REVISIONS

R. Vallizadeh/V. Toan/Y.L./W.L./F.C.
DESIGN OVERSIGHT
SIGN OFF DATE 09/01/11

	BY	CHECKED
DESIGN	G. Baker	P. Ritchie
DETAILS	S. Camo	T. McMeans
QUANTITIES	D. Turner	M. Roberts

PREPARED FOR THE STATE OF CALIFORNIA DEPARTMENT OF TRANSPORTATION

R. Manzanarez
PROJECT ENGINEER

BRIDGE NO. 34-0006L/R
KILOMETER POST 13.2/13.9

SAN FRANCISCO OAKLAND BAY BRIDGE
EAST SPAN SEISMIC SAFETY PROJECT
SELF-ANCHORED SUSPENSION BRIDGE
(SUPERSTRUCTURE & TOWER)

CROSSBEAM AT PIER E2 NO. 4

Rev. Date: 5-18-98

ORIGINAL SCALE IN MILLIMETERS FOR REDUCED PLANS 0 10 20 30 40 50 60 70 80 90 100

CU 04
EA 0120F1

DISREGARD PRINTS BEARING EARLIER REVISION DATES

REVISION DATES (PRELIMINARY STAGE ONLY) 05/15/99 08/02/99 05/24/01 01/08/02 07/01/02 12/19/02 12/01/05

SHEET 303R1 OF

FILE => I:\bb\04-012001\sas\contract plans and cco\cco\cco#87\1-original 09-01-11\dgn\agcrs15.dgn

USERNAME => PTom DATE PLOTTED => 30 AUG 2011 TIME PLOTTED => 10:31:57

DIST.	COUNTY	ROUTE	KILOMETER POST TOTAL PROJECT	SHEET NO.	TOTAL SHEETS
04	SF	80	13.2/13.9	721R1	1204

Caltrans Metric

George Baker
REGISTERED ENGINEER - CIVIL
12-6-04
PLANS APPROVAL DATE

REGISTERED PROFESSIONAL ENGINEER George S. Baker No. C57112 Exp. 12/31/05 CIVIL STATE OF CALIFORNIA

The State of California or its officers or agents shall not be responsible for the accuracy or completeness of electronic copies of this plan sheet.

T.Y. LIN / MOFFATT & NICHOL
825 BATTERY STREET
SAN FRANCISCO, CA 94111

Caltrans now has a web site! To get to the web site, go to: http://www.dot.ca.gov

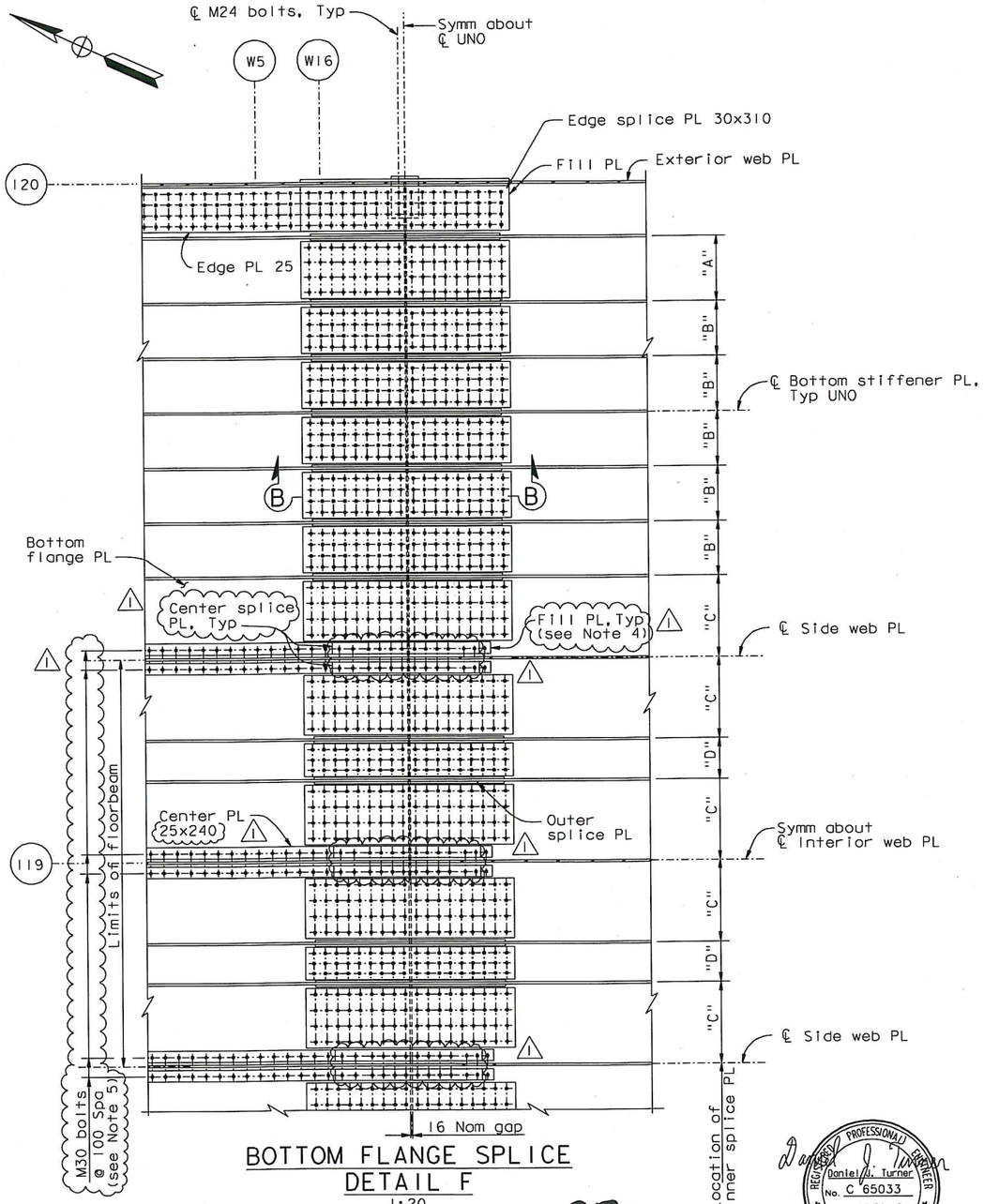

BOTTOM FLANGE SPLICE
DETAIL F
1:20

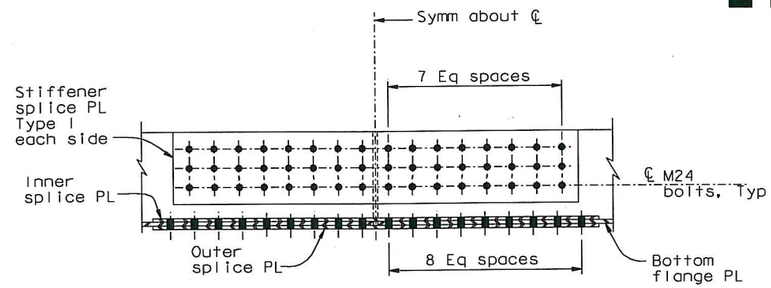

SECTION B-B
1:10

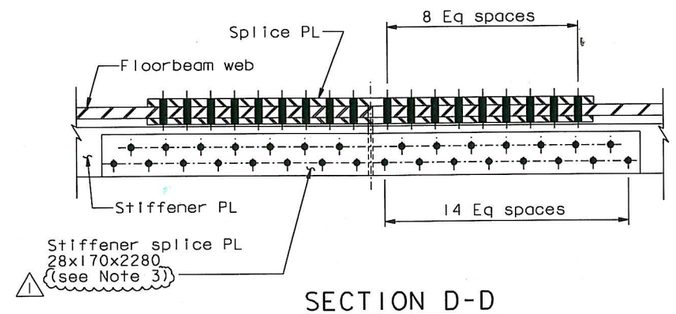

SECTION D-D
1:10

SPLICE PLATE TABLE	
Plate Type	Dimensions
Inner PL "A"	PL 25x1620x420
Inner PL "B"	PL 25x1620x340
Inner PL "C"	PL 25x1620x440
Inner PL "D"	PL 25x1620x240
Outer PL	PL 30x1620x9980
Stiff PL Type I	PL 30x250x1440

NOTES:

1. For details not shown, see "Typical Crossbeam Details No. 8" sheet.
2. For details not shown, see "Typical Crossbeam Details" sheets.
3. At the Contractor's option, the stiffener splice PL length may be reduced to 1740, subject to review and approval of the Engineer.
4. For crossbeam segments which vary in depth within the specified tolerances, the Contractor shall use fill plates in the bottom splice to correct for the variation. Fill plates shown on the plans shall be adjusted as required to bring splice plates into contact.
5. At the Contractor's option, it is acceptable to space the M30 bolts at 90 mm, subject to review and approval of the Engineer.

CONTRACT CHANGE ORDER NO. 87
SHEET 78 OF 115

REQUESTS FOR INFORMATION NOT ADDRESSED IN THIS CCO REMAIN IN FORCE

REGISTERED PROFESSIONAL ENGINEER Daniel J. Turner No. C 65033 Exp. 06/30/13 CIVIL STATE OF CALIFORNIA

FOR REVISIONS ONLY

ALL DIMENSIONS ARE IN MILLIMETERS UNLESS OTHERWISE SHOWN

R. Valizadeh/V. Toan/Y.L./W.L./F.C.
DESIGN OVERSIGHT
Roya Valizadeh / Vong Toan / Y Liu
SIGN OFF DATE 09/01/11

MARK	DATE	DESCRIPTIONS	BY	CH'D	CCO#
1	09/01/11	EAST END OBG	DT	GB	87

REVISIONS

DESIGN	BY G. Baker	CHECKED	P. Ritchie
DETAILS	BY D. Veytsman	CHECKED	T. McMeans
QUANTITIES	BY D. Turner	CHECKED	M. Roberts

PREPARED FOR THE STATE OF CALIFORNIA DEPARTMENT OF TRANSPORTATION

R. Manzanarez
PROJECT ENGINEER

BRIDGE NO. 34-0006L/R
KILOMETER POST 13.2/13.9

SAN FRANCISCO OAKLAND BAY BRIDGE
EAST SPAN SEISMIC SAFETY PROJECT
SELF-ANCHORED SUSPENSION BRIDGE
(SUPERSTRUCTURE & TOWER)

CROSSBEAM AT PIER E2 NO. 5

Rev. Date: 5-18-98

ORIGINAL SCALE IN MILLIMETERS FOR REDUCED PLANS 0 10 20 30 40 50 60 70 80 90 100

CU 04
EA 0120F1

DISREGARD PRINTS BEARING EARLIER REVISION DATES
REVISION DATES (PRELIMINARY STAGE ONLY) 05/15/99 09/27/99 05/27/01 09/06/02 07/09/02 12/18/02 12/01/05

SHEET 304R1 OF

FILE => I:\bb\04-012001\sas\contract plans and cco\cco\cco#87\1-original 09-01-11\dgn\agcrs16.dgn

USERNAME => PTom DATE PLOTTED => 30 AUG 2011 TIME PLOTTED => 10:33:40

100% PS&E

DIST.	COUNTY	ROUTE	KILOMETER POST TOTAL PROJECT	SHEET NO.	TOTAL SHEETS
04	SF	80	13.2/13.9	722R2	1204

George Baker
REGISTERED ENGINEER - CIVIL
12-6-04
PLANS APPROVAL DATE

REGISTERED PROFESSIONAL ENGINEER George S. Baker No. C57112 Exp. 12/31/05 CIVIL STATE OF CALIFORNIA

The State of California or its officers or agents shall not be responsible for the accuracy or completeness of electronic copies of this plan sheet.

T.Y. LIN / MOFFATT & NICHOL
825 BATTERY STREET
SAN FRANCISCO, CA 94111

Caltrans now has a web site! To get to the web site, go to: http://www.dot.ca.gov

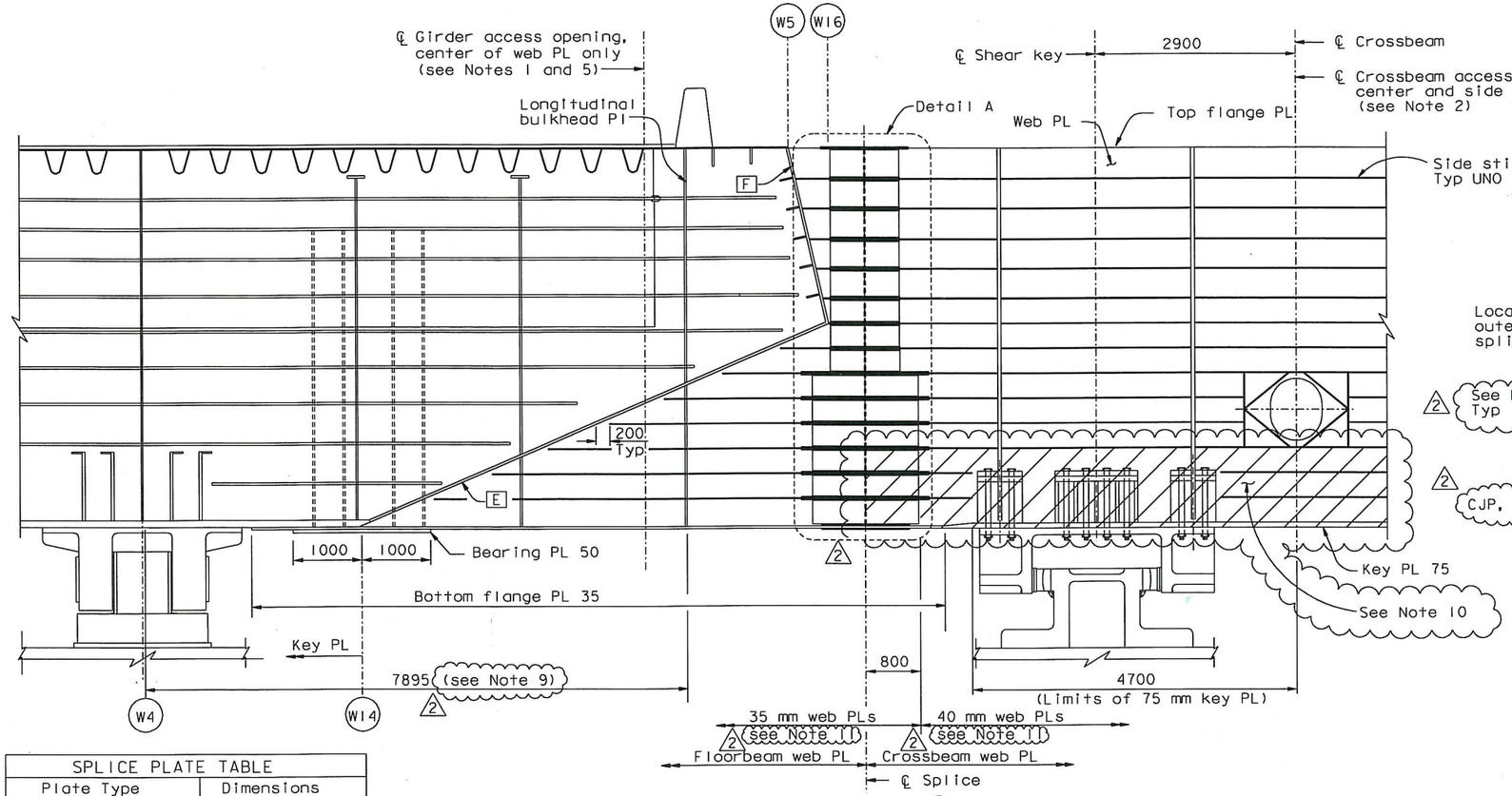

SECTION C-C
1:40

SPLICE PLATE TABLE	
Plate Type	Dimensions
Inner Splice PL "A"	PL 22x1000x390
Inner Splice PL "B"	PL 22x1620x310
Outer Splice PL "D"	PL 28x1000x3170
Inner Splice PL "C"	PL 22x1000x310
Outer Splice PL "E"	PL 28x1620x2140

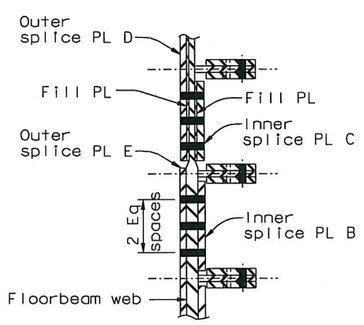

SECTION A-A
1:10

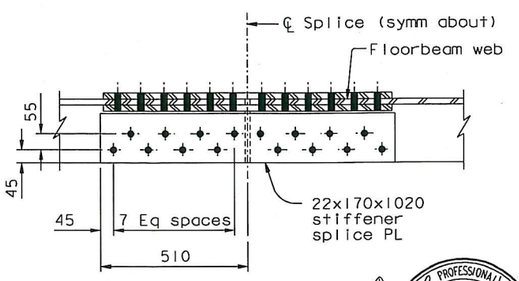

SECTION B-B
1:10

LEGEND:

"Indicates TTP Web PL"

NOTES:

1. For details at girder access opening, see "Typical Girder Details No.15" sheet.
2. For details of crossbeam access opening not shown, see "Typical Crossbeam Details No.6" sheet.
3. For details not shown, see "Typical Crossbeam Details" sheets.
4. For layout of E2 floorbeam web, see "Girder At Pier E2 No.4" sheet.
5. For girder access locations, see "Girder Access Details No.3" sheet.
6. For details not shown, see "Typical Crossbeam Details No.5" sheet.
7. Transitions not required for crossbeam web stiffeners terminating at Face F.
8. For Section D-D, see "Crossbeam At Pier E2 No.5" sheet.
9. For the EB girder, this dimension is 7885.
10. Through Thickness Properties (TTP) area shown applies to PP118.7, 119.0 and 119.3.
11. It is acceptable to extend the limit of the 40 mm web PL to the centerline of the splice from 800 mm from the splice, provided the fill plates on the 35 mm web are placed on the interior faces of the crossbeam.

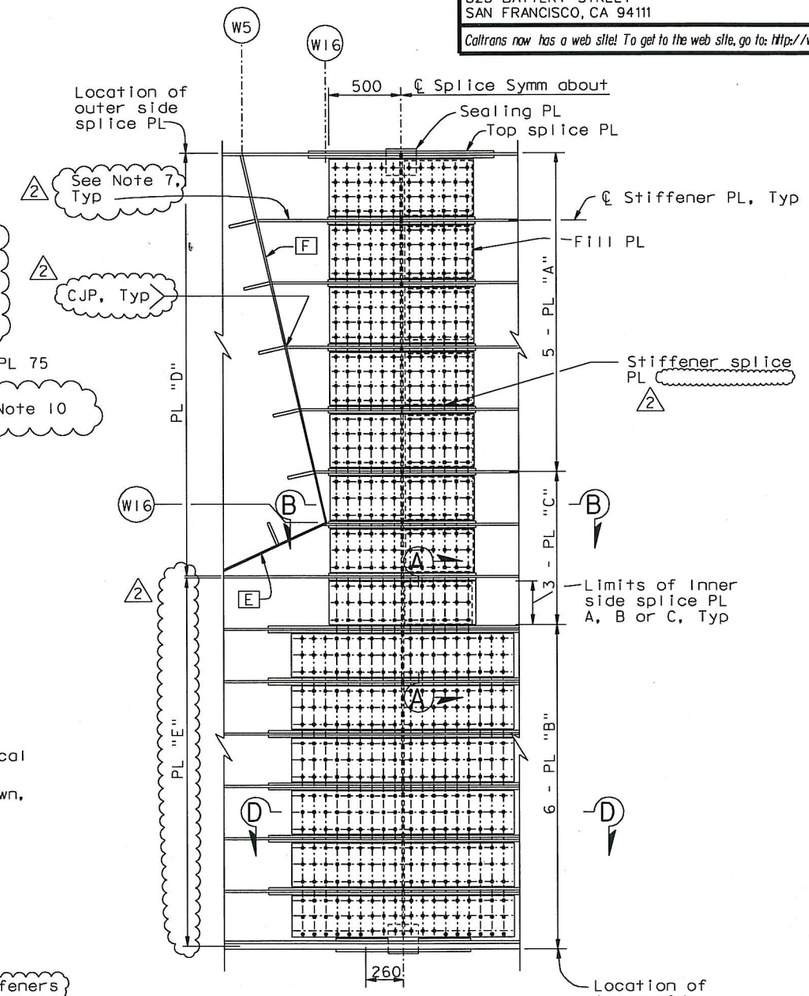

WEB SPLICE
DETAIL A
1:20

CONTRACT CHANGE ORDER NO. 87
SHEET 79 OF 115

REQUESTS FOR INFORMATION NOT ADDRESSED IN THIS CCO REMAIN IN FORCE

Daniel J. Turner
REGISTERED PROFESSIONAL ENGINEER Daniel J. Turner No. C 65033 Exp. 06/30/13 CIVIL STATE OF CALIFORNIA

FOR REVISIONS ONLY

ALL DIMENSIONS ARE IN MILLIMETERS UNLESS OTHERWISE SHOWN

MARK	DATE	DESCRIPTIONS	BY	CH'D	CCO#
2	09/01/11	EAST END OBG	DT	GB	87
1	11/05/10	PP119 ACCESS & PP125 PLATES	GB	DT	86

REVISIONS

R. Vallzadeh/V. Toan/Y.L./W.L./F.C.
DESIGN OVERSIGHT
SIGN OFF DATE 09/01/11

	BY	CHECKED	
DESIGN	G. Baker		P. Ritchie
DETAILS	D. Veytsman		T. McMeans
QUANTITIES	D. Turner		M. Roberts

PREPARED FOR THE STATE OF CALIFORNIA DEPARTMENT OF TRANSPORTATION

R. Manzanarez
PROJECT ENGINEER

BRIDGE NO. 34-0006L/R
KILOMETER POST 13.2/13.9

SAN FRANCISCO OAKLAND BAY BRIDGE
EAST SPAN SEISMIC SAFETY PROJECT
SELF-ANCHORED SUSPENSION BRIDGE
(SUPERSTRUCTURE & TOWER)
CROSSBEAM AT PIER E2 NO.6

Rev. Date: 5-18-98

ORIGINAL SCALE IN MILLIMETERS FOR REDUCED PLANS 0 10 20 30 40 50 60 70 80 90 100

CU 04
EA 0120F1

DISREGARD PRINTS BEARING EARLIER REVISION DATES
REVISION DATES (PRELIMINARY STAGE ONLY) 08/08/95 05/31/01 04/08/02 07/08/02 12/13/02 12/01/05

SHEET 305R2 OF

FILE => I:\bb\04-0120FI\sas\contract plans and cco\cco\cco#87\1-original 09-01-11\dgn\agcrs17.dgn

USERNAME => PTom DATE PLOTTED => 30 AUG 2011 TIME PLOTTED => 10:35:34

100 % PS&E

DIST.	COUNTY	ROUTE	KILOMETER POST TOTAL PROJECT	SHEET NO.	TOTAL SHEETS
04	SF	80	13.2/13.9	722S1	1204

REGISTERED ENGINEER - CIVIL

04-18-12
PLANS APPROVAL DATE

REGISTERED PROFESSIONAL ENGINEER Marwan N. Nader No. C 054426 Exp. 12/31/13 CIVIL STATE OF CALIFORNIA

The State of California or its officers or agents shall not be responsible for the accuracy or completeness of electronic copies of this plan sheet.

T.Y. LIN / MOFFATT & NICHOL
825 BATTERY STREET
SAN FRANCISCO, CA 94111

Caltrans now has a web site! To get to the web site, go to: http://www.dot.ca.gov

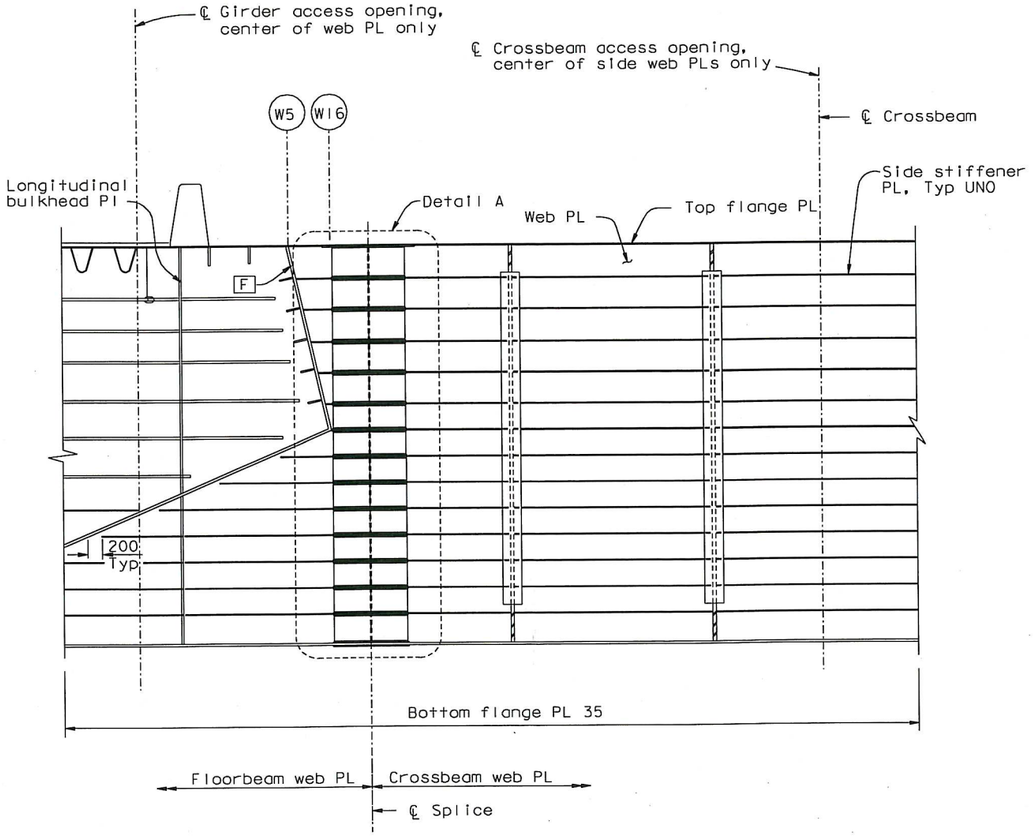

SECTION C'-C'
1:40

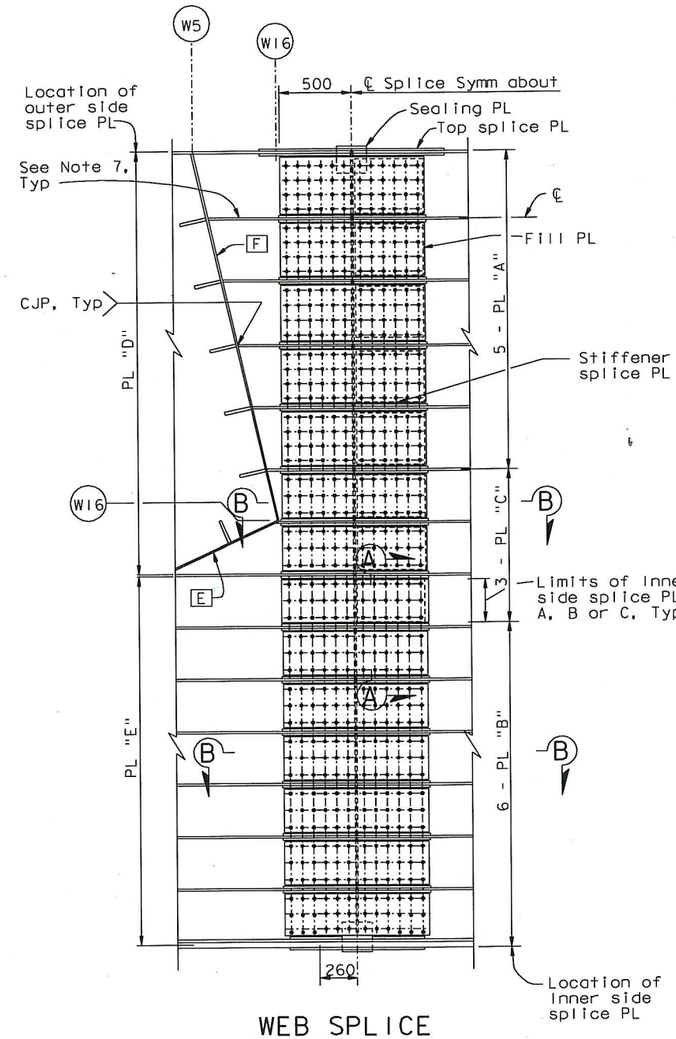

WEB SPLICE
DETAIL A
1:20

SPLICE PLATE TABLE	
Plate Type	Dimensions
Inner Splice PL "A"	PL 22x1000x390
Inner Splice PL "B"	PL 22x1000x310
Outer Splice PL "D"	PL 28x1000x3170
Inner Splice PL "C"	PL 22x1000x310
Outer Splice PL "E"	PL 28x1000x2140

NOTES:

1. For details at girder access opening, see "Typical Girder Details No. 15" sheet.
2. For details of crossbeam access opening not shown, see "Typical Crossbeam Details No. 6" sheet.
3. For details not shown, see "Typical Crossbeam Details" sheets.
4. For layout of E2 floorbeam web, see "Girder At Pier E2 No. 4" sheet.
5. For girder access locations, see "Girder Access Details No. 3" sheet.
6. For details not shown, see "Typical Crossbeam Details No. 5" sheet.
7. Transitions not required for crossbeam web stiffeners terminating at Face F.
8. For Section D-D, see "Crossbeam At Pier E2 No. 5" sheet.

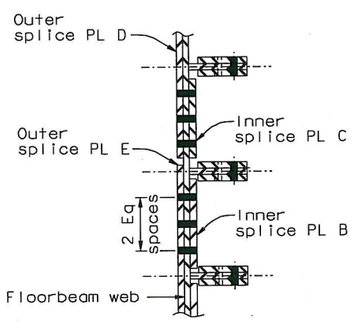

SECTION A-A
1:10

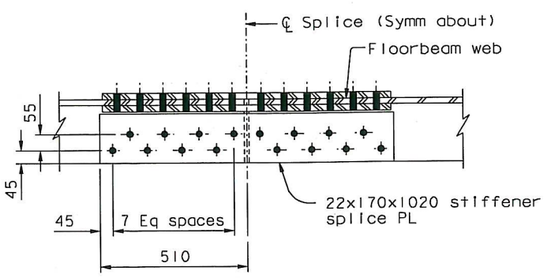

SECTION B-B
1:10

CONTRACT CHANGE ORDER NO. 87
SHEET 80 OF 115

REQUESTS FOR INFORMATION NOT ADDRESSED IN THIS CCO REMAIN IN FORCE

ALL DIMENSIONS ARE IN MILLIMETERS UNLESS OTHERWISE SHOWN

MARK	DATE	DESCRIPTIONS	BY	CH'D	CCO#
0	04/18/12	EAST END OBG	GB	MN	87

REVISIONS

R. Vallzadeh/V. Toan/Y.L./W.L./F.C.
DESIGN OVERSIGHT
SIGN OFF DATE 04/18/12

DESIGN BY G. Baker CHECKED M. Nader
DETAILS BY G. Baker CHECKED D. Turner
QUANTITIES BY G. Baker CHECKED D. Turner

PREPARED FOR THE STATE OF CALIFORNIA DEPARTMENT OF TRANSPORTATION

R. Manzanarez
PROJECT ENGINEER

BRIDGE NO. 34-0006L/R
KILOMETER POST 13.2/13.9

SAN FRANCISCO OAKLAND BAY BRIDGE
EAST SPAN SEISMIC SAFETY PROJECT
SELF-ANCHORED SUSPENSION BRIDGE
(SUPERSTRUCTURE & TOWER)

CROSSBEAM AT PIER E2 NO. 6A

Rev. Date: 5-18-98

ORIGINAL SCALE IN MILLIMETERS FOR REDUCED PLANS 0 10 20 30 40 50 60 70 80 90 100

CU 04
EA 0120F1

DISREGARD PRINTS BEARING EARLIER REVISION DATES 04/18/12

REVISION DATES (PRELIMINARY STAGE ONLY)

SHEET 305S1 OF

FILE => I:\bb\04-0120F1\sas\contract plans and cco\cco\cco#87\temp\aggrs17a.dgn

100 % PS&E

USERNAME => DWinrow DATE PLOTTED => 18 APR 2012 TIME PLOTTED => 11:24:22

DIST.	COUNTY	ROUTE	KILOMETER POST TOTAL PROJECT	SHEET NO.	TOTAL SHEETS
04	SF	80	13.2/13.9	723R1	1204

George Baker
REGISTERED ENGINEER - CIVIL
12-6-04
PLANS APPROVAL DATE

REGISTERED PROFESSIONAL ENGINEER George S. Baker No. C 57112 Exp. 12/31/05 CIVIL STATE OF CALIFORNIA

The State of California or its officers or agents shall not be responsible for the accuracy or completeness of electronic copies of this plan sheet.

T.Y. LIN / MOFFATT & NICHOL
825 BATTERY STREET
SAN FRANCISCO, CA 94111

Caltrans now has a web site! To get to the web site, go to: http://www.dot.ca.gov

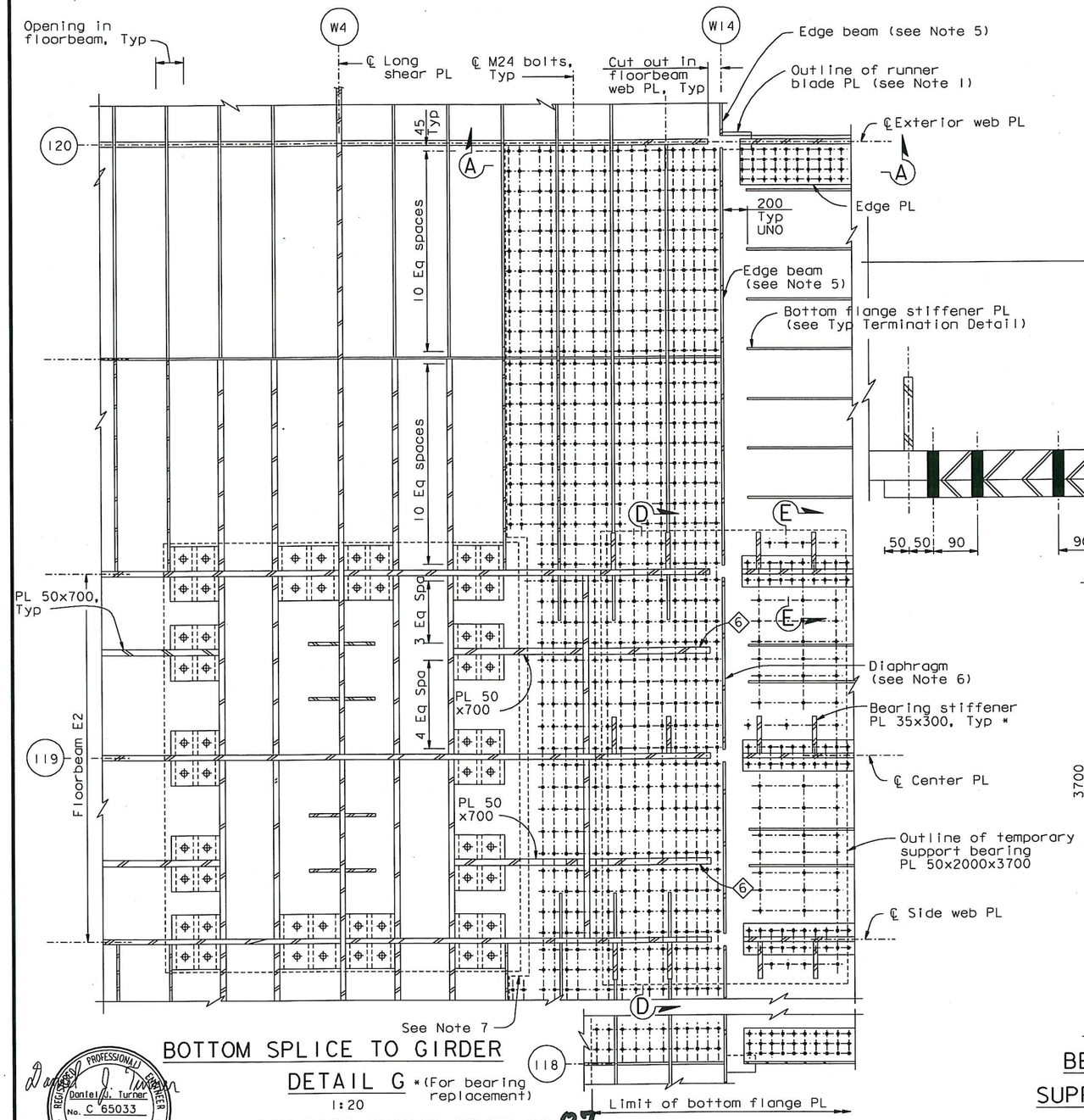

BOTTOM SPLICE TO GIRDER

DETAIL G *(For bearing replacement)

1:20

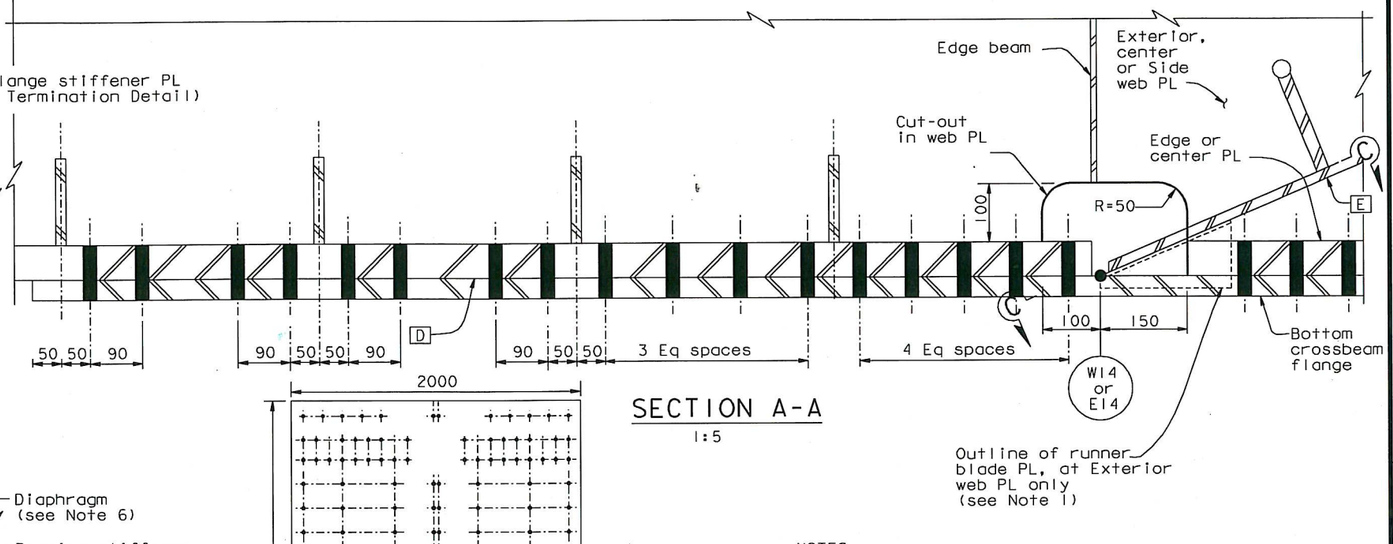

SECTION A-A

1:5

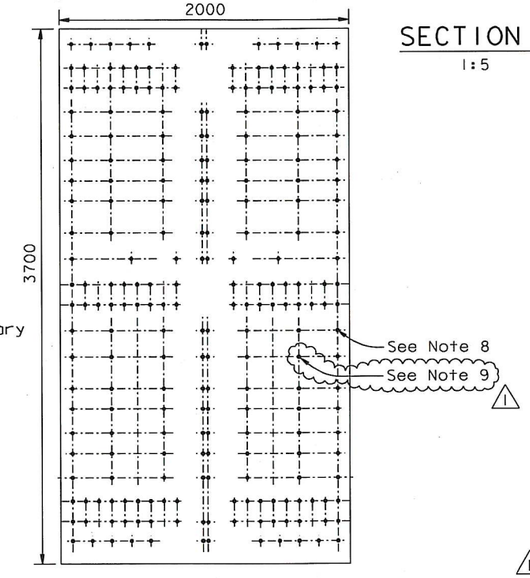

BEARING PLATE AT TEMPORARY SUPPORT AT LINE E13/W13 - PLAN

NOTES:

1. For details of runner blade, see "Typical Crossbeam Details No. 10" sheet.
2. For Section C-C, see "Typical Crossbeam Details No. 9" sheet.
3. For details not shown, see "Typical Crossbeam Details" sheets.
4. For Sections D-D and E-E, see "Crossbeam At Pier E2 No. 3" sheet.
5. For edge beam, see longitudinal shear PL Type 1 in "Typical Girder Details No. 7" sheet.
6. For diaphragm details, see "Girder At Pier E2 No. 6" sheet.
7. Cope crossbeam bottom flange to clear bearing top PL.
8. Stitch and sealing bolts shall be detailed to avoid stiffeners.
9. At the Contractor's option, standard oversize holes may be used for anchor bolts of the temporary bearings at E13/W13 and E14/W14. (1)

100 % PS&E

DATE PLOTTED => 30 AUG 2011 TIME PLOTTED => 10:39:19

REGISTERED PROFESSIONAL ENGINEER Daniel J. Turner No. C 65033 Exp. 06/30/13 CIVIL STATE OF CALIFORNIA

FOR REVISIONS ONLY

CONTRACT CHANGE ORDER NO. 87
SHEET 81 OF 115

REQUESTS FOR INFORMATION NOT ADDRESSED IN THIS CCO REMAIN IN FORCE

ALL DIMENSIONS ARE IN MILLIMETERS UNLESS OTHERWISE SHOWN

R. Vallzadeh/V. Toan/Y.L./W.L./F.C.
DESIGN OVERSIGHT
SIGN OFF DATE 09/01/11

MARK	DATE	DESCRIPTIONS	BY	CH'D	CCO#
1	09/01/11	EAST END OBG	DT	GB	87

REVISIONS

Rev. Date: 5-18-98

	BY	CHECKED
DESIGN	G. Baker	P. Ritchie
DETAILS	D. Veytsman	T. McMeans
QUANTITIES	D. Turner	M. Roberts

PREPARED FOR THE STATE OF CALIFORNIA DEPARTMENT OF TRANSPORTATION

R. Manzanarez
PROJECT ENGINEER

BRIDGE NO. 34-0006L/R
KILOMETER POST 13.2/13.9

SAN FRANCISCO OAKLAND BAY BRIDGE
EAST SPAN SEISMIC SAFETY PROJECT
SELF-ANCHORED SUSPENSION BRIDGE
(SUPERSTRUCTURE & TOWER)

CROSSBEAM AT PIER E2 NO. 7

ORIGINAL SCALE IN MILLIMETERS FOR REDUCED PLANS 0 10 20 30 40 50 60 70 80 90 100

CU 04
EA 0120F1

DISREGARD PRINTS BEARING EARLIER REVISION DATES

REVISION DATES (PRELIMINARY STAGE ONLY) 08/27/99 05/27/01 04/08/02 01/07/02 12/13/02 10/13/05 12/01/05

SHEET 306R1 OF

FILE => I:\bb\04-012001\sas\contract plans and cco\cco\cco#87\1-original 09-01-11\dgn\agcrs18.dgn

USERNAME => PTom

DIST.	COUNTY	ROUTE	KILOMETER POST TOTAL PROJECT	SHEET NO.	TOTAL SHEETS
04	SF	80	13.2/13.9	725R2	1204

George Baker
REGISTERED ENGINEER - CIVIL
12-6-04
PLANS APPROVAL DATE
REGISTERED PROFESSIONAL ENGINEER George S. Baker No. C 57112 Exp. 12/31/05 CIVIL STATE OF CALIFORNIA

The State of California or its officers or agents shall not be responsible for the accuracy or completeness of electronic copies of this plan sheet.

T.Y. LIN / MOFFATT & NICHOL
825 BATTERY STREET
SAN FRANCISCO, CA 94111

Caltrans now has a web site! To get to the web site, go to: http://www.dot.ca.gov

Caltrans Metric

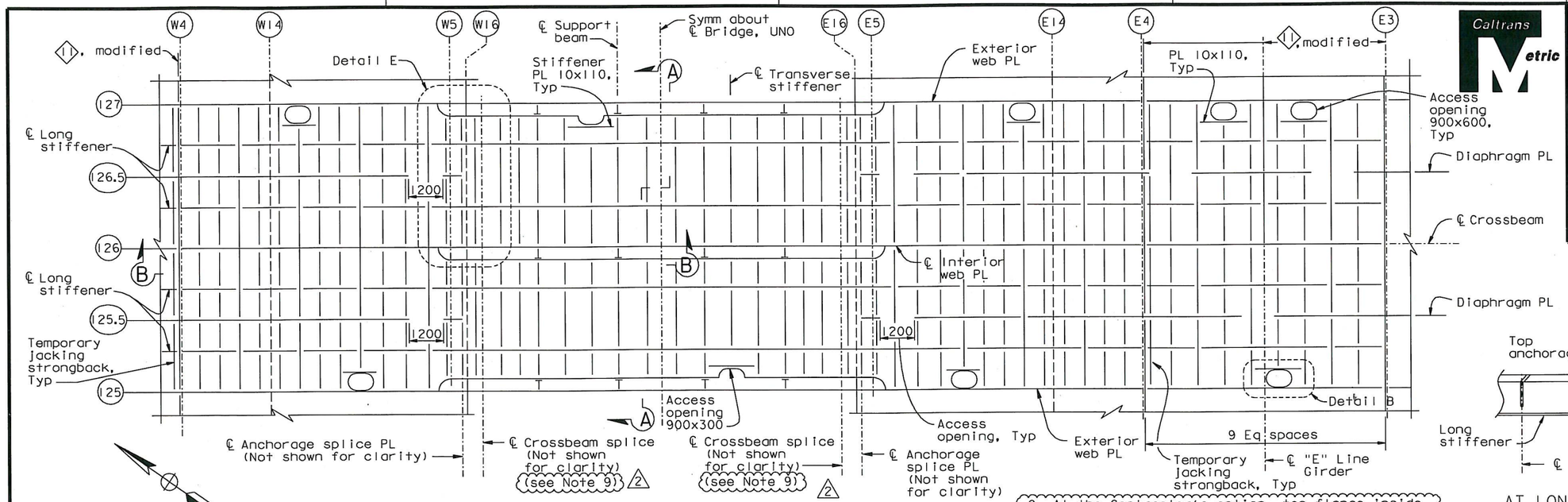

CROSSBEAM PLAN AT TOP ANCHORAGE PLATE LEVEL 2

1:80

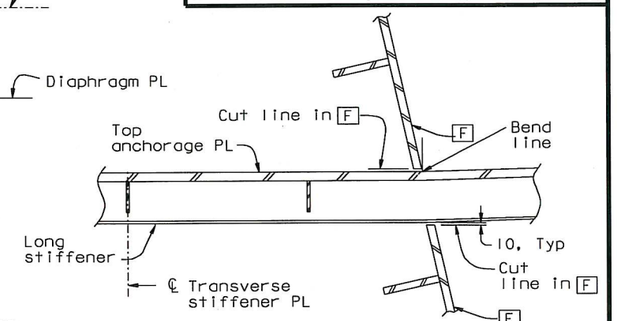

AT LONGITUDINAL STIFFENER

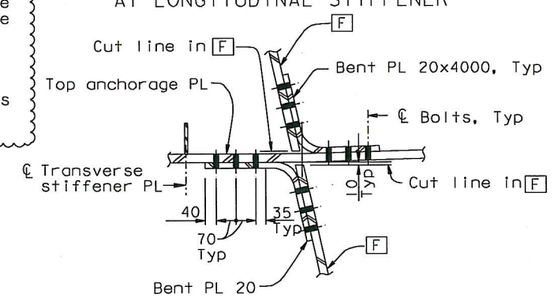

BETWEEN LONGITUDINAL STIFFENERS

DETAIL A (See Note 8) 2

1:10

9. At the Contractor's option, top flange inside splice plates may be chamfered by 4 mm at the top corner to provide additional clearance from top flange stiffener welds, subject to review and approval of the Engineer.
10. At the Contractor's option, the web splice may be detailed such that bolt edge distances are 1.25d minimum, subject to review and approval of the Engineer.

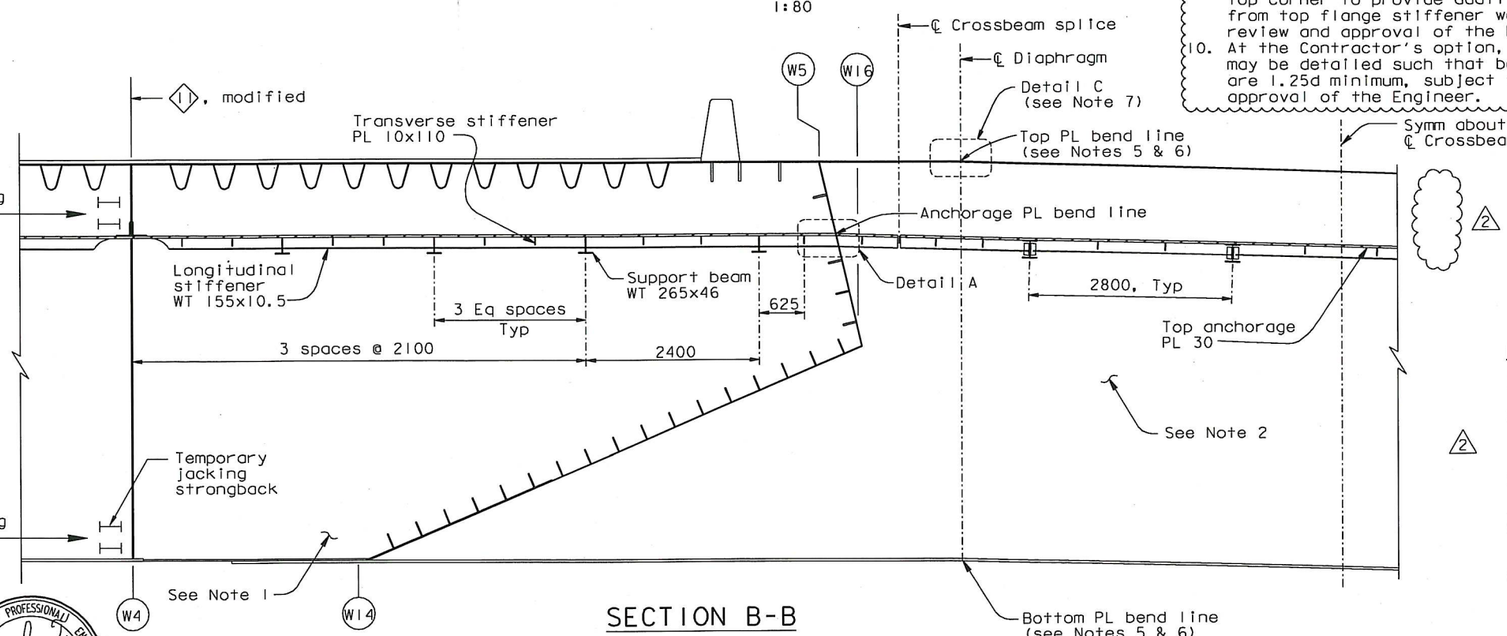

SECTION B-B

1:40

NOTES:

1. For girder details not shown, see "Girder At East Transition" and "Floorbeam At East Transition" sheets.
2. For crossbeam details not shown, see "Crossbeam At Pier E2" sheets. 2 At the Contractor's option, PL 22x200 plate stiffeners at the east anchorage crossbeam webs may be used in lieu of PL 22x205 plate stiffeners, subject to review and approval of the Engineer.
3. For Section A-A and Detail E, see "Crossbeam At East Anchorage No. 3" sheet.
4. For Detail B, see "Crossbeam At East Anchorage No. 4" sheet.
5. The location of the angular changes to the top and bottom skin plates due to the roadway geometry shall be at the first diaphragm inside the crossbeam field splice, towards the centerline of the bridge.
6. Stiffeners at the angle change, running longitudinal to the crossbeam, shall be interrupted and welded to the diaphragm with a CJP weld. Stiffeners on opposite faces of the diaphragm shall be aligned within the tolerances specified for stiffener splices.
7. For Detail C, see similar Section B-B on "Typical Crossbeam Details No. 4" sheet.
8. 2 For alternate Detail A, see "Crossbeam At East Anchorage No. 3" sheet.

Daniel J. Turner
REGISTERED PROFESSIONAL ENGINEER Daniel J. Turner No. C 65033 Exp. 06/30/13 CIVIL STATE OF CALIFORNIA

FOR REVISIONS ONLY

CONTRACT CHANGE ORDER NO. 87
SHEET 82 OF 115

REQUESTS FOR INFORMATION NOT ADDRESSED IN THIS CCO REMAIN IN FORCE

ALL DIMENSIONS ARE IN MILLIMETERS UNLESS OTHERWISE SHOWN

MARK	DATE	DESCRIPTIONS	BY	CH'D	CCO#
2	09/01/11	EAST END OBG	DT	GB	87
1	04/02/07	CROSSBEAM KINK	GB	DT	38

REVISIONS

R. Valizadeh/V. Toan/Y.L./W.L./F.C.
DESIGN OVERSIGHT
Ryan Valizadeh / Vong Toan / Y. Liu
SIGN OFF DATE 09/01/11

Rev. Date: 5-18-98

DESIGN BY G. Baker CHECKED P. Ritchie
DETAILS BY D. Veytsman CHECKED T. McMeans
QUANTITIES BY C. Mauch CHECKED M. Roberts

PREPARED FOR THE STATE OF CALIFORNIA DEPARTMENT OF TRANSPORTATION

R. Manzanarez
PROJECT ENGINEER

BRIDGE NO. 34-0006L/R
KILOMETER POST 13.2/13.9

SAN FRANCISCO OAKLAND BAY BRIDGE
EAST SPAN SEISMIC SAFETY PROJECT
SELF-ANCHORED SUSPENSION BRIDGE
(SUPERSTRUCTURE & TOWER)

CROSSBEAM AT EAST ANCHORAGE NO. 2

ORIGINAL SCALE IN MILLIMETERS FOR REDUCED PLANS 0 10 20 30 40 50 60 70 80 90 100

CU 04
EA 0120F1

DISREGARD PRINTS BEARING EARLIER REVISION DATES

REVISION DATES (PRELIMINARY STAGE ONLY) 05/15/99 08/02/99 05/17/01 01/08/02 07/01/02 12/19/02

SHEET 308R2 OF

FILE => I:\bb\04-01200I\sas\contract plans and cco\cco\cco#87\I-original 09-01-11\dgn\agcrsII.dgn

100 % PS&E

DATE PLOTTED => 30 AUG 2011 TIME PLOTTED => 10:24:23

USERNAME => PTom

DIST.	COUNTY	ROUTE	KILOMETER POST TOTAL PROJECT	SHEET NO.	TOTAL SHEETS
04	SF	80	13.2/13.9	725S1	1204

Caltrans Metric

Daniel J. Turner
REGISTERED ENGINEER - CIVIL

09-01-11
PLANS APPROVAL DATE

REGISTERED PROFESSIONAL ENGINEER Daniel J. Turner No. C 65033 Exp. 06/30/13 CIVIL STATE OF CALIFORNIA

The State of California or its officers or agents shall not be responsible for the accuracy or completeness of electronic copies of this plan sheet.

T.Y. LIN / MOFFATT & NICHOL
825 BATTERY STREET
SAN FRANCISCO, CA 94111

Caltrans now has a web site! To get to the web site, go to: http://www.dot.ca.gov

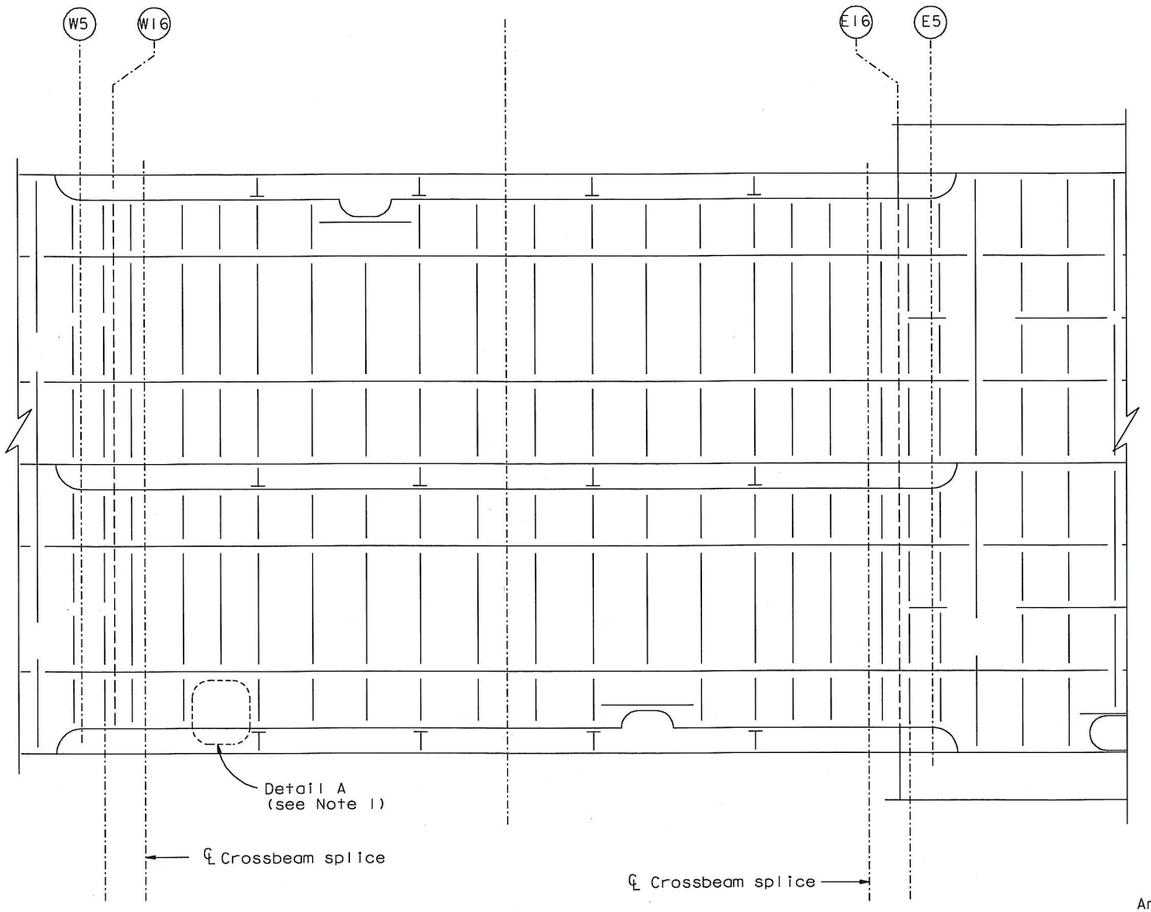

PLAN OF TOP ANCHORAGE PLATE
1:50

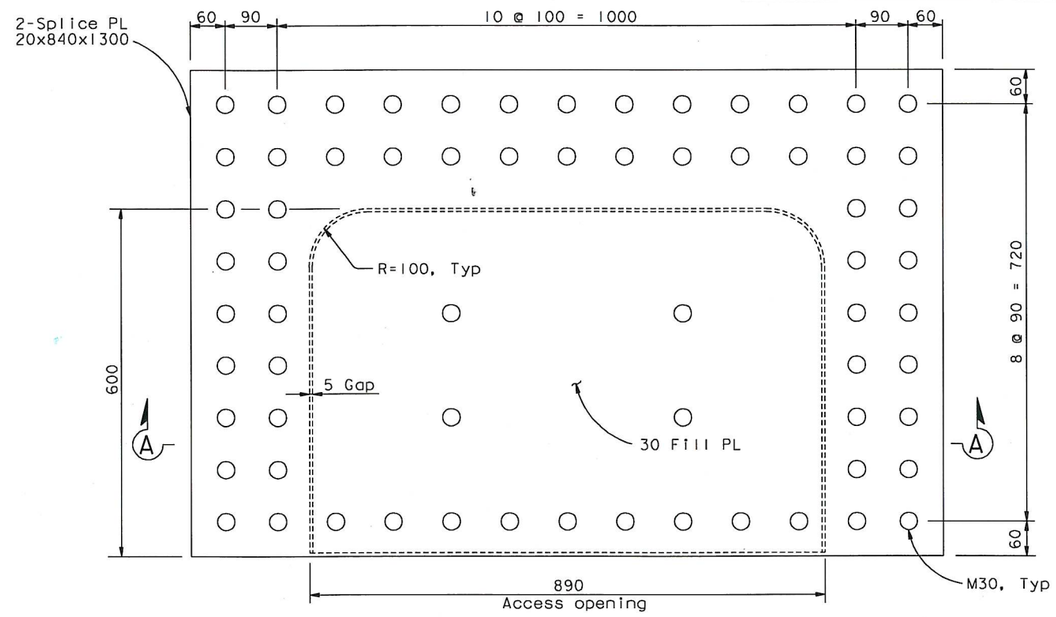

DETAIL A (Optional access opening, Typ)
1:5 (See Note 2)

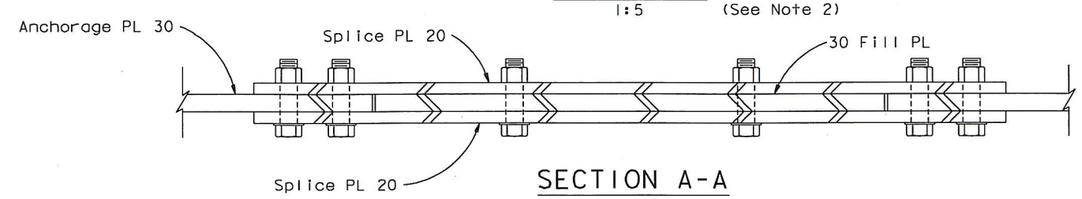

SECTION A-A
1:5

NOTES:

1. At the Contractor's option, access openings may be provided in the anchorage PL, subject to review and approval of the Engineer.
2. Anchorage PL WT stiffener may be omitted at the access opening splice PL, subject to the review and approval of the Engineer.

CONTRACT CHANGE ORDER NO. 87
SHEET 83 OF 115

REQUESTS FOR INFORMATION NOT ADDRESSED IN THIS CCO REMAIN IN FORCE

ALL DIMENSIONS ARE IN MILLIMETERS UNLESS OTHERWISE SHOWN

R. Vaziazdeh/V. Toan/Y.L./W.L./F.C.
DESIGN OVERSIGHT
Roya Vaziazdeh / Vang Toan / Y Liu
SIGN OFF DATE 09/01/11

MARK	DATE	DESCRIPTIONS	BY	CH'D	CCO#
0	09/01/11	EAST END OBG	DT	GB	87

REVISIONS

DESIGN	BY D. Turner	CHECKED G. Baker	
DETAILS	BY D. Turner	CHECKED G. Baker	
QUANTITIES	BY D. Turner	CHECKED G. Baker	

PREPARED FOR THE STATE OF CALIFORNIA DEPARTMENT OF TRANSPORTATION

R. Manzanarez
PROJECT ENGINEER

BRIDGE NO. 34-0006L/R
KILOMETER POST 13.2/13.9

SAN FRANCISCO OAKLAND BAY BRIDGE
EAST SPAN SEISMIC SAFETY PROJECT
SELF-ANCHORED SUSPENSION BRIDGE
(SUPERSTRUCTURE & TOWER)

CROSSBEAM AT EAST ANCHORAGE NO. 2A

Rev. Date: 5-18-98

ORIGINAL SCALE IN MILLIMETERS FOR REDUCED PLANS 0 10 20 30 40 50 60 70 80 90 100

CU 04
EA 0120F1

DISREGARD PRINTS BEARING EARLIER REVISION DATES 09/01/11

REVISION DATES (PRELIMINARY STAGE ONLY)

SHEET 308S1 OF

FILE => I:\bb\04-0120F1\sas\contract plans and cco\cco\cco#87\1-original 09-01-11\dgn\agcrs11a.dgn

100 % PS&E

DATE PLOTTED => 30 AUG 2011 TIME PLOTTED => 10:25:57

USERNAME => PTom

DIST.	COUNTY	ROUTE	KILOMETER POST TOTAL PROJECT	SHEET NO.	TOTAL SHEETS
04	SF	80	13.2/13.9	726R2	1204

George Baker
REGISTERED ENGINEER - CIVIL
12-6-04
PLANS APPROVAL DATE

REGISTERED PROFESSIONAL ENGINEER George S. Baker No. C 57112 Exp. 12/31/05 CIVIL STATE OF CALIFORNIA

The State of California or its officers or agents shall not be responsible for the accuracy or completeness of electronic copies of this plan sheet.

T.Y. LIN / MOFFATT & NICHOL
825 BATTERY STREET
SAN FRANCISCO, CA 94111

Caltrans now has a web site! To get to the web site, go to: http://www.dot.ca.gov

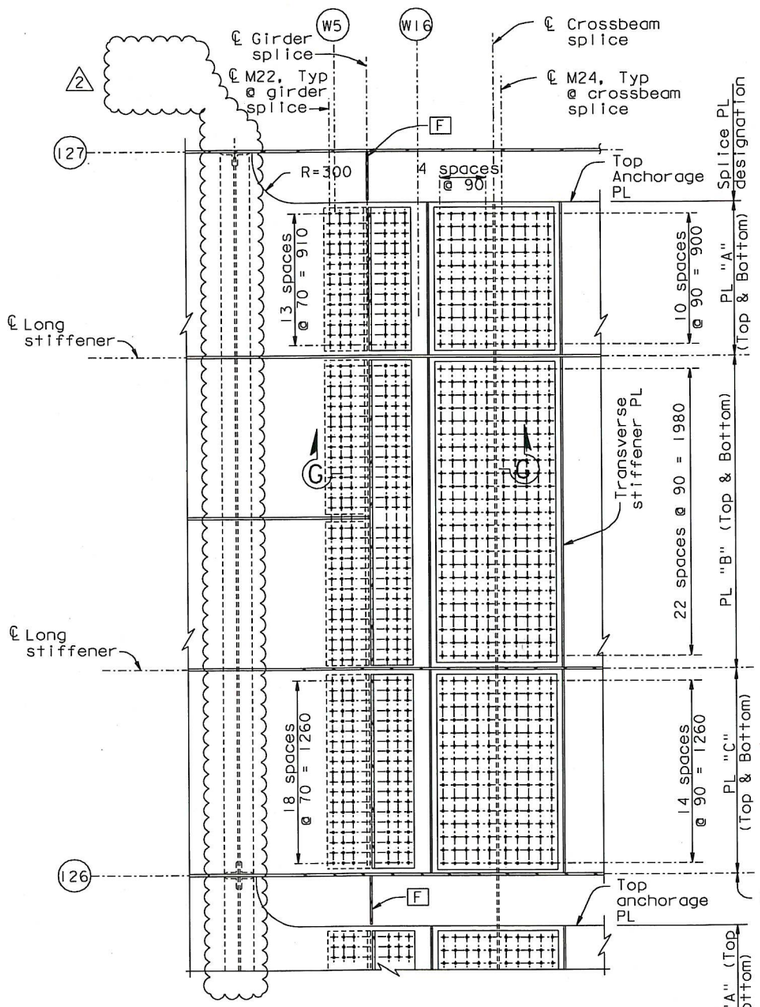

TOP ANCHORAGE PLATE SPLICES

DETAIL E

1:20

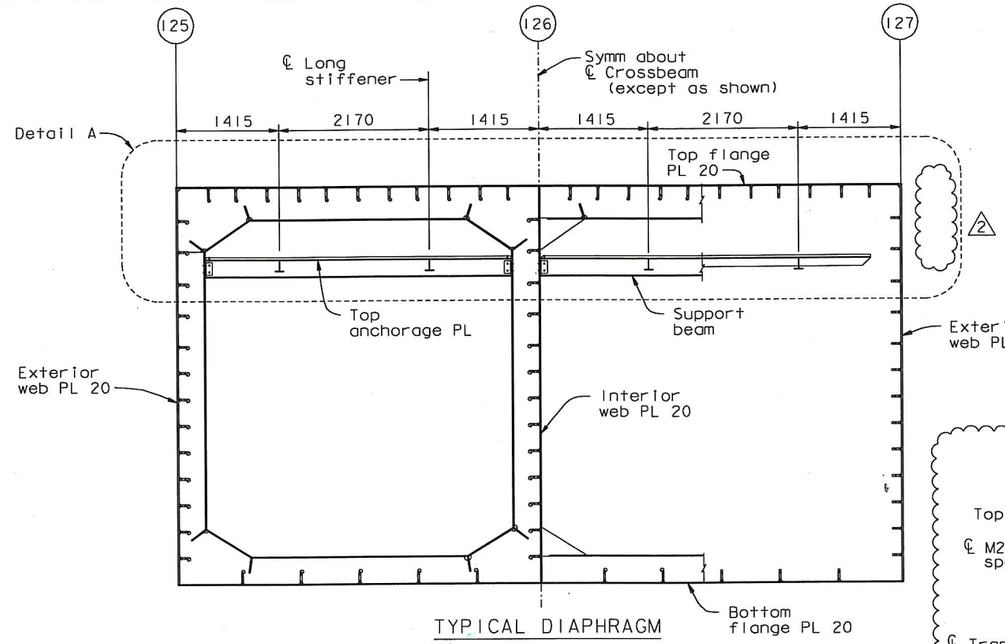

TYPICAL DIAPHRAGM

SECTION A-A

1:40

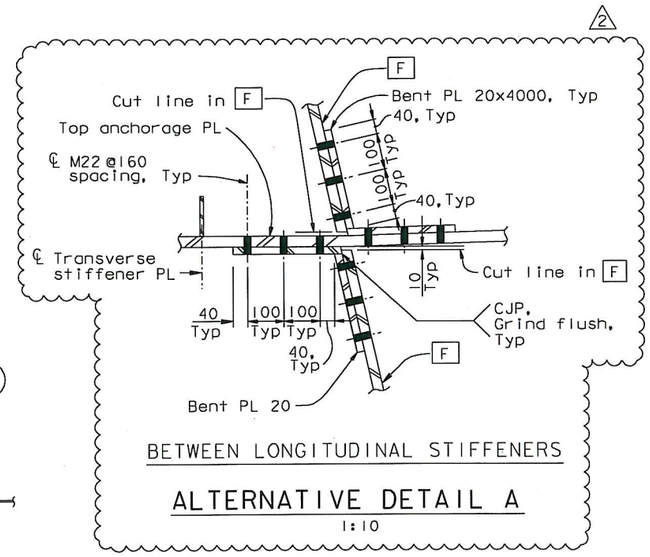

BETWEEN LONGITUDINAL STIFFENERS

ALTERNATIVE DETAIL A

1:10

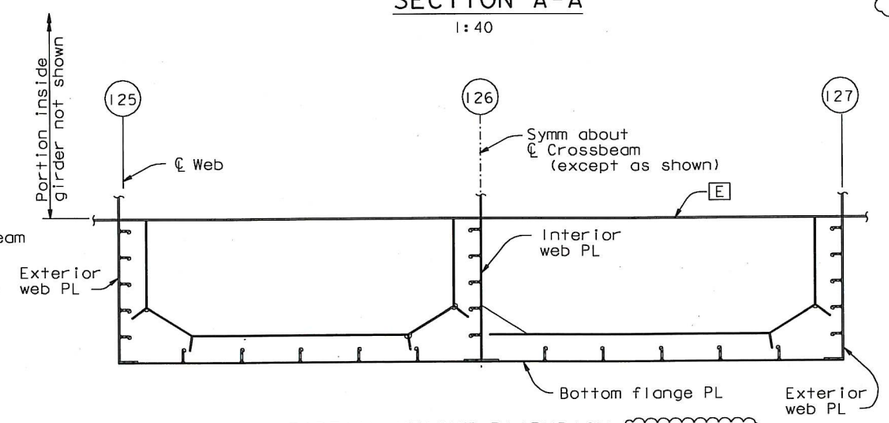

PARTIAL HEIGHT DIAPHRAGM (See Note 5)

SECTION C-C

1:40

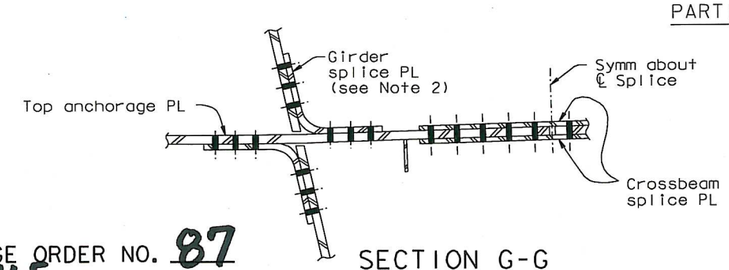

SECTION G-G

1:10

CROSSBEAM SPLICE PLATE TABLE	
Plate Type	Dimensions
PL "A"	PL 20x920x990
PL "B"	PL 20x920x2070
PL "C"	PL 20x920x1350

NOTES:

1. For details not shown, see "Typical Crossbeam Details" sheets.
2. For girder splice PL details, see Detail A on "Crossbeam At East Anchorage No.2" sheet.
3. For Detail A, see "Crossbeam At East Anchorage No.4" sheet.
4. At the Contractor's option, the orientation of the crossbeam diaphragms and PP126 web stiffeners may be reversed, subject to review and approval of the Engineer.
5. At the Contractor's option, WT345x62.5 and WT460x100.5 may be substituted with equivalent built-up sections, subject to review and approval of the Engineer.

100 % PS&E

Daniel J. Turner
REGISTERED PROFESSIONAL ENGINEER Daniel J. Turner No. C 65033 Exp. 06/30/13 CIVIL STATE OF CALIFORNIA

FOR REVISIONS ONLY

CONTRACT CHANGE ORDER NO. 87
SHEET 84 OF 115

REQUESTS FOR INFORMATION NOT ADDRESSED IN THIS CCO REMAIN IN FORCE

ALL DIMENSIONS ARE IN MILLIMETERS UNLESS OTHERWISE SHOWN

R. Valizadeh/V. Toan/Y.L./W.L./F.C.
DESIGN OVERSIGHT
Roya Valizadeh / Vong Toan / Y. Liu
SIGN OFF DATE 09/01/11

MARK	DATE	DESCRIPTIONS	BY	CH'D	CCO#
2	09/01/11	EAST END OBG	DT	GB	87
1	04/02/07	CROSSBEAM KINK	GB	DT	38

REVISIONS

Rev. Date: 5-18-98

	BY	CHECKED
DESIGN	G. Baker	P. Ritchie
DETAILS	D. Veytsman	T. McMeans
QUANTITIES	C. Mauch	M. Roberts

PREPARED FOR THE STATE OF CALIFORNIA DEPARTMENT OF TRANSPORTATION

R. Manzanarez
PROJECT ENGINEER

BRIDGE NO. 34-0006L/R
KILOMETER POST 13.2/13.9

SAN FRANCISCO OAKLAND BAY BRIDGE
EAST SPAN SEISMIC SAFETY PROJECT
SELF-ANCHORED SUSPENSION BRIDGE
(SUPERSTRUCTURE & TOWER)

CROSSBEAM AT EAST ANCHORAGE NO. 3

ORIGINAL SCALE IN MILLIMETERS FOR REDUCED PLANS 0 10 20 30 40 50 60 70 80 90 100

CU 04
EA 0120F1

DISREGARD PRINTS BEARING EARLIER REVISION DATES → 08/28/95 05/24/01 01/08/02 07/09/02 12/19/02

SHEET 309R2 OF

FILE => I:\bb\04-012001\sas\contract plans and cco\cco\cco#87\1-original 09-01-11\dgn\agcrs12.dgn

USERNAME => PTom DATE PLOTTED => 30 AUG 2011 TIME PLOTTED => 10:27:30

DIST.	COUNTY	ROUTE	KILOMETER POST TOTAL PROJECT	SHEET NO.	TOTAL SHEETS
04	SF	80	13.2/13.9	727R1	1204

George Baker
REGISTERED ENGINEER - CIVIL
12-6-04
PLANS APPROVAL DATE

REGISTERED PROFESSIONAL ENGINEER George S. Baker No. C57112 Exp. 12/31/05 CIVIL STATE OF CALIFORNIA

The State of California or its officers or agents shall not be responsible for the accuracy or completeness of electronic copies of this plan sheet.

T.Y. LIN / MOFFATT & NICHOL
825 BATTERY STREET
SAN FRANCISCO, CA 94111

Caltrans now has a web site! To get to the web site, go to: http://www.dot.ca.gov

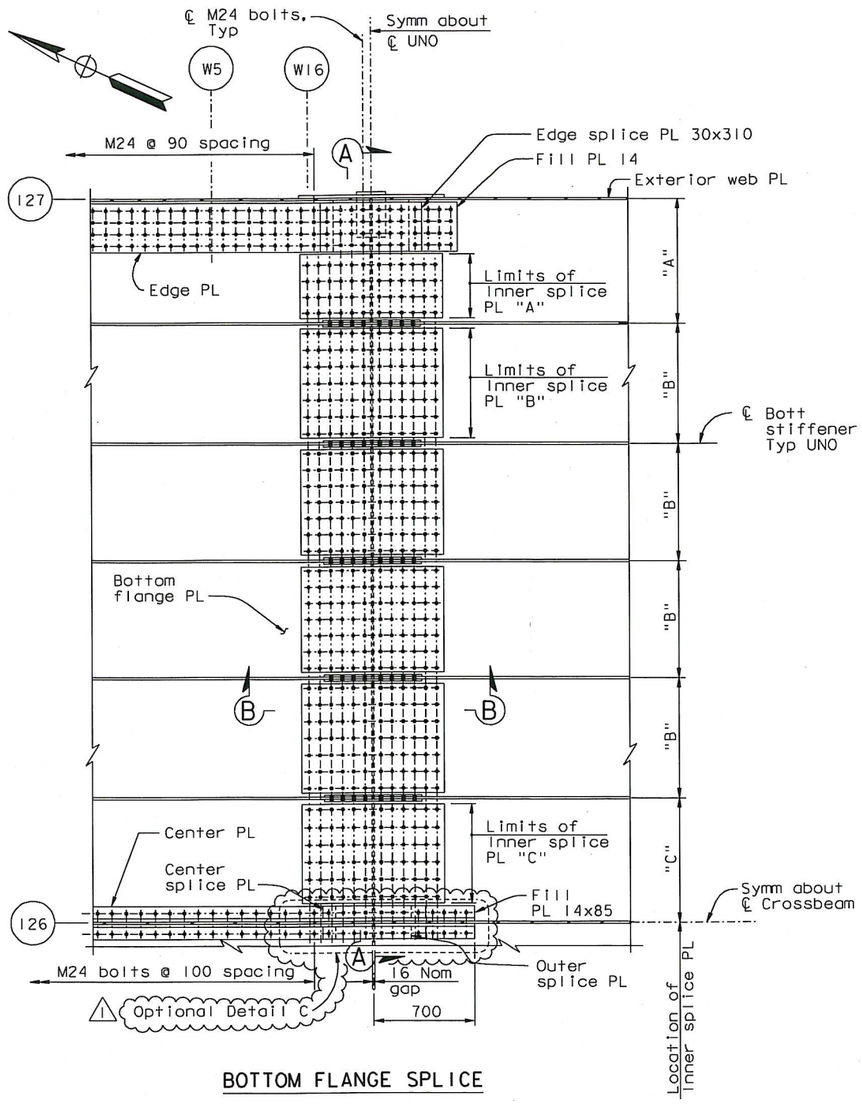

BOTTOM FLANGE SPLICE

DETAIL F

1:20

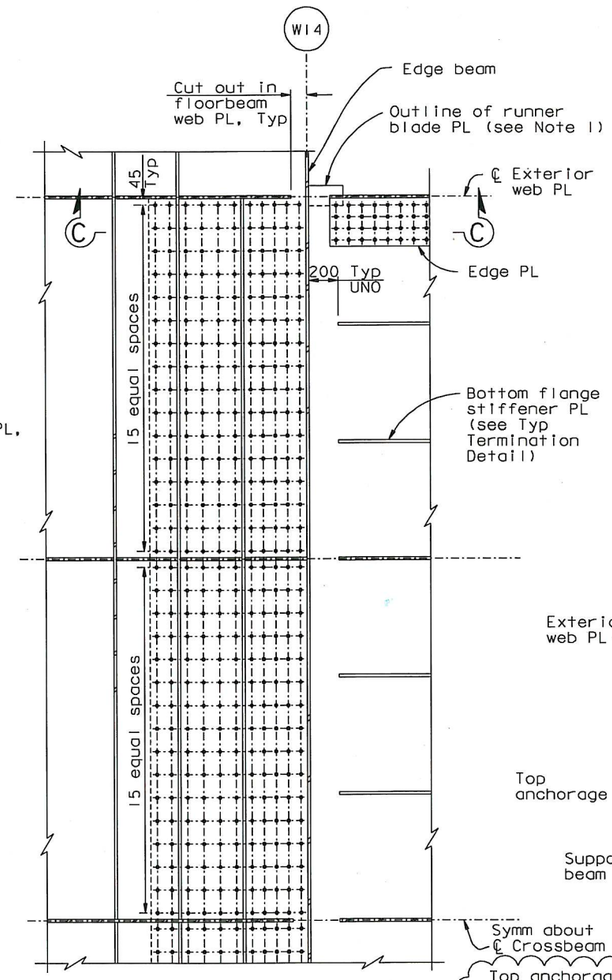

BOTTOM SPLICE TO GIRDER

DETAIL G

1:20

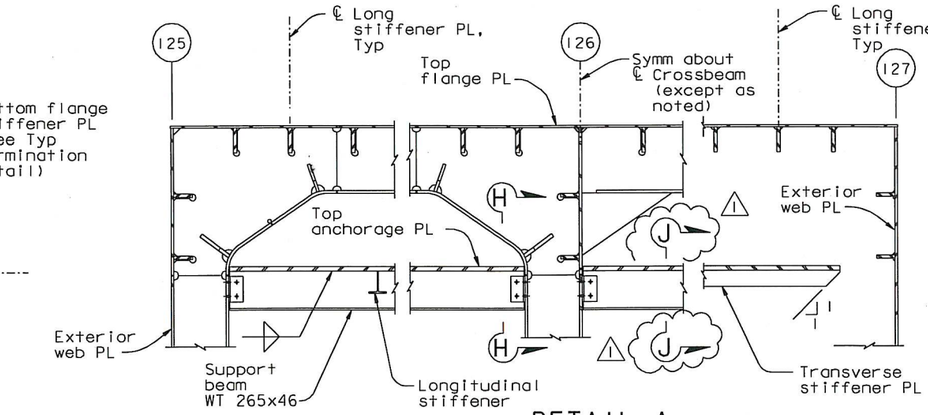

DETAIL A

1:20

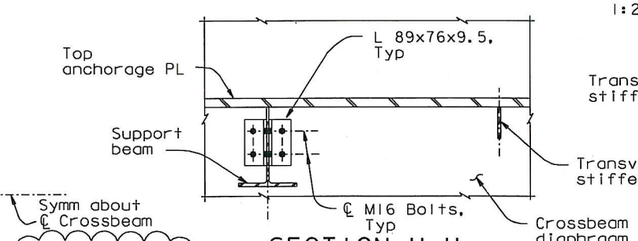

SECTION H-H

1:10

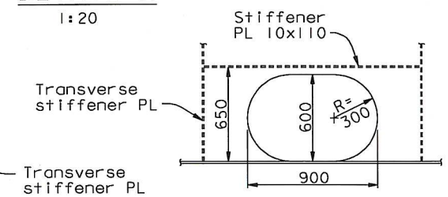

DETAIL B

1:20

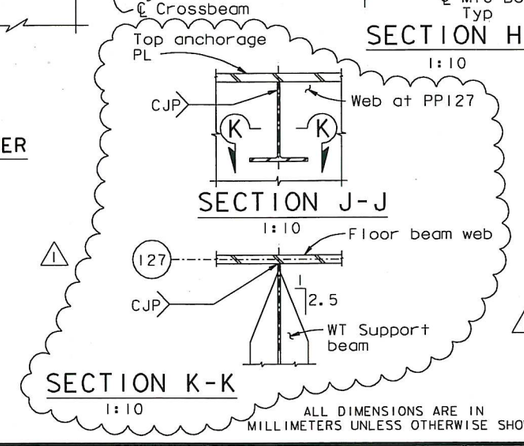

SECTION J-J

1:10

SECTION K-K

1:10

ALL DIMENSIONS ARE IN MILLIMETERS UNLESS OTHERWISE SHOWN

NOTES:

1. For Crossbeam details not shown, see "Typical Crossbeam Details" sheets.
2. For Section A-A, see "Typical Crossbeam Details No. 8" sheet.
3. For Section B-B, see "Crossbeam At Pier E2 No. 5" sheet.
4. For Section C-C, see Section A-A on "Crossbeam At Pier E2 No. 7" sheet.
5. For optional Detail C, see "Crossbeam At East Anchorage No. 4A" sheet.

BOTTOM FLANGE SPLICE PLATE TABLE	
Plate Type	Dimensions
Inner PL "A"	PL 16x1000x420
Inner PL "B"	PL 16x1000x750
Inner PL "C"	PL 16x1000x690
Outer PL	PL 20x1000x9980

REGISTERED PROFESSIONAL ENGINEER Marwan N. Nader No. C 054426 Exp. 12/31/13 CIVIL STATE OF CALIFORNIA

FOR REVISIONS ONLY

CONTRACT CHANGE ORDER NO. 87
SHEET 85 OF 115

REQUESTS FOR INFORMATION NOT ADDRESSED IN THIS CCO REMAIN IN FORCE

R. Valizadeh/V. Toan/Y.L./W.L./F.C.
DESIGN OVERSIGHT
Roya Valizadeh / Vong Toan / Y Liu
SIGN OFF DATE 04/18/12

MARK	DATE	DESCRIPTIONS	BY	CH'D	CCO#
1	04/18/12	EAST END OBG	MN	GB	87

REVISIONS

	BY	CHECKED
DESIGN	G. Baker	P. Ritchie
DETAILS	S. Camo	T. McMeans
QUANTITIES	C. Mauch	M. Roberts

PREPARED FOR THE STATE OF CALIFORNIA DEPARTMENT OF TRANSPORTATION

R. Manzanarez
PROJECT ENGINEER

BRIDGE NO. 34-0006L/R
KILOMETER POST 13.2/13.9

SAN FRANCISCO OAKLAND BAY BRIDGE
EAST SPAN SEISMIC SAFETY PROJECT
SELF-ANCHORED SUSPENSION BRIDGE
(SUPERSTRUCTURE & TOWER)

CROSSBEAM AT EAST ANCHORAGE NO. 4

Rev. Date: 5-18-98

ORIGINAL SCALE IN MILLIMETERS FOR REDUCED PLANS 0 10 20 30 40 50 60 70 80 90 100

CU 04
EA 0120F1

DISREGARD PRINTS BEARING EARLIER REVISION DATES

REVISION DATES (PRELIMINARY STAGE ONLY): 08/02/99 05/31/01 04/08/02 07/01/02 12/19/02

SHEET 310R1 OF

FILE => I:\bb\04-012001\sas\contract plans and cco\cco\cco#87\temp\agcrs19.dgn

100 % PS&E

USERNAME => DWinrow DATE PLOTTED => 18 APR 2012 TIME PLOTTED => 11:25:11

DIST.	COUNTY	ROUTE	KILOMETER POST TOTAL PROJECT	SHEET NO.	TOTAL SHEETS
04	SF	80	13.2/13.9	727S1	1204

Caltrans Metric

Daniel J. Turner
REGISTERED ENGINEER - CIVIL
09-01-11
PLANS APPROVAL DATE

REGISTERED PROFESSIONAL ENGINEER Daniel J. Turner No. C 65033 Exp. 06/30/13 CIVIL STATE OF CALIFORNIA

The State of California or its officers or agents shall not be responsible for the accuracy or completeness of electronic copies of this plan sheet.

T.Y. LIN / MOFFATT & NICHOL
825 BATTERY STREET
SAN FRANCISCO, CA 94111

Caltrans now has a web site! To get to the web site, go to: http://www.dot.ca.gov

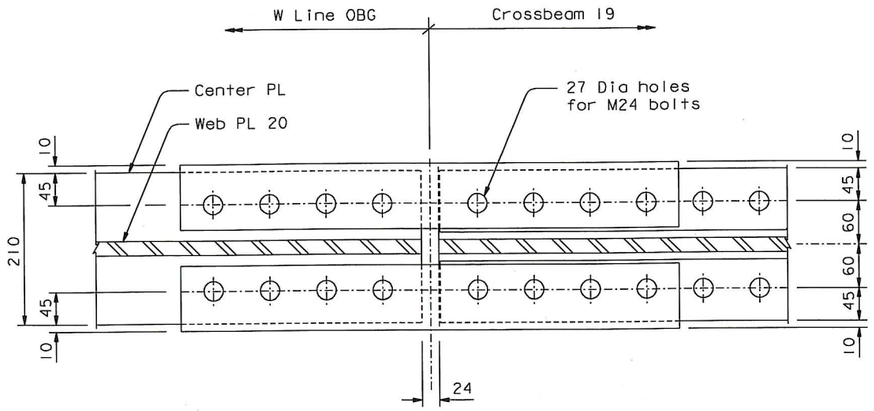

OPTIONAL DETAIL C (See Note 1)

1:4

NOTES:

1. At the Contractor's option, optional Detail C may be used to provide additional clearance in the case of crossbeam to OBG misalignment, subject to review and approval of the Engineer.

100 % PS&E

CONTRACT CHANGE ORDER NO. 87
SHEET 86 OF 115

REQUESTS FOR INFORMATION NOT ADDRESSED IN THIS CCO REMAIN IN FORCE

ALL DIMENSIONS ARE IN MILLIMETERS UNLESS OTHERWISE SHOWN

R. Vallizadeh/V. Toan/Y.L./W.L./F.C.
DESIGN OVERSIGHT
Roya Valiz / Vong Toan / Y Liu
SIGN OFF DATE 09/01/11

MARK	DATE	DESCRIPTIONS	BY	CH'D	CCO#
0	09/01/11	EAST END OBG	DT	GB	87

REVISIONS

	BY	CHECKED
DESIGN	D. Turner	G. Baker
DETAILS	D. Turner	G. Baker
QUANTITIES	D. Turner	G. Baker

PREPARED FOR THE STATE OF CALIFORNIA DEPARTMENT OF TRANSPORTATION

R. Manzanarez
PROJECT ENGINEER

BRIDGE NO. 34-0006L/R
KILOMETER POST 13.2/13.9

SAN FRANCISCO OAKLAND BAY BRIDGE
EAST SPAN SEISMIC SAFETY PROJECT
SELF-ANCHORED SUSPENSION BRIDGE
(SUPERSTRUCTURE & TOWER)

CROSSBEAM AT EAST ANCHORAGE NO. 4A

Rev. Date: 5-18-98

ORIGINAL SCALE IN MILLIMETERS FOR REDUCED PLANS 0 10 20 30 40 50 60 70 80 90 100

CU 04
EA 0120F1

DISREGARD PRINTS BEARING EARLIER REVISION DATES 09/01/11

REVISION DATES (PRELIMINARY STAGE ONLY)

SHEET 310S1 OF

FILE => I:\bb\04-01200I\sas\contract plans and cco\cco\cco=87\I-original 09-01-11\dgn\agcrs19a.dgn

USERNAME => PTom DATE PLOTTED => 30 AUG 2011 TIME PLOTTED => 10:43:15

Caltrans now has a web site! To get to the web site, go to: http://www.dot.ca.gov

Caltrans Metric

DIST.	COUNTY	ROUTE	KILOMETER POST TOTAL PROJECT	SHEET NO.	TOTAL SHEETS
04	SF	80	13.2/13.9	732R3	1204

George Baker
REGISTERED ENGINEER - CIVIL
12-6-04
PLANS APPROVAL DATE

REGISTERED PROFESSIONAL ENGINEER George S. Baker No. C57112 Exp. 12/31/05 CIVIL STATE OF CALIFORNIA

The State of California or its officers or agents shall not be responsible for the accuracy or completeness of electronic copies of this plan sheet.

T.Y. LIN / MOFFATT & NICHOL
825 BATTERY STREET
SAN FRANCISCO, CA 94111

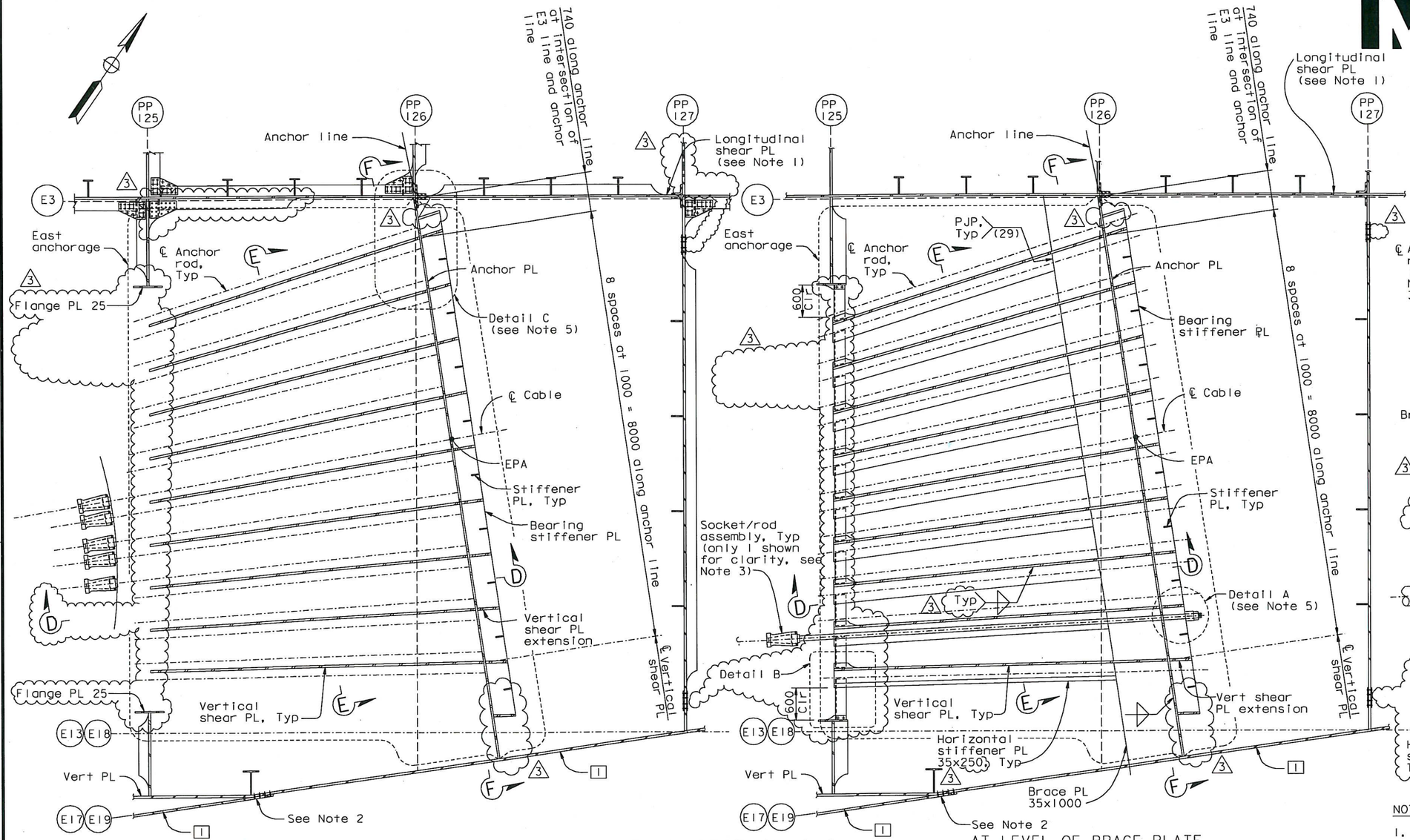

AT LEVEL OF TYPICAL BEARING STIFFENER

PLAN SECTION C-C
1:40

AT LEVEL OF BRACE PLATE

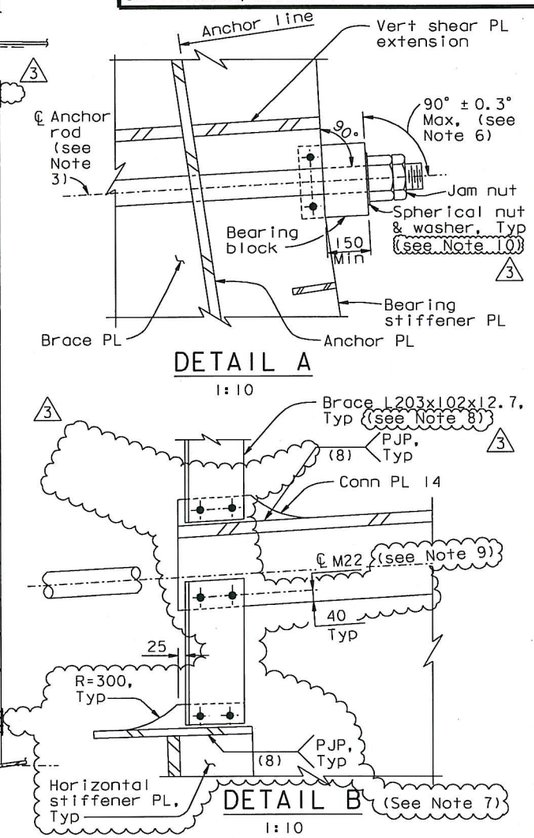

DETAIL A
1:10

DETAIL B
1:10

NOTES:

1. For details of longitudinal shear PL between PP125 and PP127, see "Girder At East Transition No.16" sheet.
2. For details of splice connection at girder PL [1] and vertical PL convergence, see "Girder At East Transition Details" sheets.
3. For strand socket and anchor rod details, see "East Cable Anchorage Details" sheet.
4. For Detail C and Sections D-D, E-E and F-F, see "East Cable Anchorage "E" Line Layout No.3" sheet.
5. Machining of bearing stiffener not shown in plan view.
6. The bearing blocks shall be aligned with the bearing stiffener plates. The angle between the bearing block and the anchor rod may vary (up to 90° ± 0.3° Max) due to the averaging of the bearing stiffeners orientation across each row of anchors.
7. For Alternative Detail B, see "East Cable Anchorage "E" Line Layout No.2A" sheet.
8. At the Contractor's option, a PL 25x200 may be used in lieu of a L203x102x12.7.
9. At the Contractor's option, bolts may be moved to 50 mm from the face of the vertical shear PL, and the L203 or PL 25 extended, to provide additional clearance from the strands, subject to review and approval of the Engineer.
10. At the Contractor's option, the anchor rod spherical nut washer may be ground to allow a rotation of up to 2.8 degrees. Corresponding anchor rod angle correction shall not be larger than 1.0 degree.

REGISTERED PROFESSIONAL ENGINEER Marwan N. Nader No. C 054426 Exp. 12/31/13 CIVIL STATE OF CALIFORNIA

FOR REVISIONS ONLY

CONTRACT CHANGE ORDER NO. 87
SHEET 87 OF 115

REQUESTS FOR INFORMATION NOT ADDRESSED IN THIS CCO REMAIN IN FORCE

MARK	DATE	DESCRIPTIONS	BY	CH'D	CCO#
3	03/09/12	EAST END OBG	MN	DT	87
2	04/08/11	SUSPENSION CABLE MISCELLANEOUS DETAILS	GB	MN	185
1	01/28/11	MISCELLANEOUS CABLE SYSTEM DETAILS	GB	MN	375I

REVISIONS

ALL DIMENSIONS ARE IN MILLIMETERS UNLESS OTHERWISE SHOWN

R. Vallizadeh/V. Toan/Y.L./W.L./F.C.
DESIGN OVERSIGHT
SIGN OFF DATE 03/08/12

	BY	CHECKED
DESIGN	G. Baker	J. Kuliki
DETAILS	M. Gulyas	T. McMeans
QUANTITIES	M. Gulyas	M. Roberts

PREPARED FOR THE STATE OF CALIFORNIA DEPARTMENT OF TRANSPORTATION

R. Manzanarez
PROJECT ENGINEER

BRIDGE NO. 34-0006L/R
KILOMETER POST 13.2/13.9

SAN FRANCISCO OAKLAND BAY BRIDGE
EAST SPAN SEISMIC SAFETY PROJECT
SELF-ANCHORED SUSPENSION BRIDGE
(SUPERSTRUCTURE & TOWER)

EAST CABLE ANCHORAGE "E" LINE LAYOUT NO.2

Rev. Date: 5-18-98

ORIGINAL SCALE IN MILLIMETERS FOR REDUCED PLANS 0 10 20 30 40 50 60 70 80 90 100

CU 04
EA 0120F1

DISREGARD PRINTS BEARING EARLIER REVISION DATES

REVISION DATES (PRELIMINARY STAGE ONLY): 01/15/99 05/10/99 08/02/99 05/31/01 04/08/02 07/31/02 12/18/02 11/13/05

SHEET 315R3 OF

FILE => L:\BB\04-012001\SAS\Contract Plans and CCO\CCO\CCO#87\2-Update 03-09-12\DGN\agan105.dgn

USERNAME => DWinrow DATE PLOTTED => 09 MAR 2012 TIME PLOTTED => 10:12:02

100 % PS&E

DIST.	COUNTY	ROUTE	KILOMETER POST TOTAL PROJECT	SHEET NO.	TOTAL SHEETS
04	SF	80	13.2/13.9	732S1	1204

REGISTERED ENGINEER - CIVIL

04-18-12
PLANS APPROVAL DATE

PROFESSIONAL ENGINEER REGISTERED Marwan N. Nader No. C 054426 Exp. 12/31/13 CIVIL STATE OF CALIFORNIA

The State of California or its officers or agents shall not be responsible for the accuracy or completeness of electronic copies of this plan sheet.

T.Y. LIN / MOFFATT & NICHOL
825 BATTERY STREET
SAN FRANCISCO, CA 94111

Caltrans now has a web site! To get to the web site, go to: http://www.dot.ca.gov

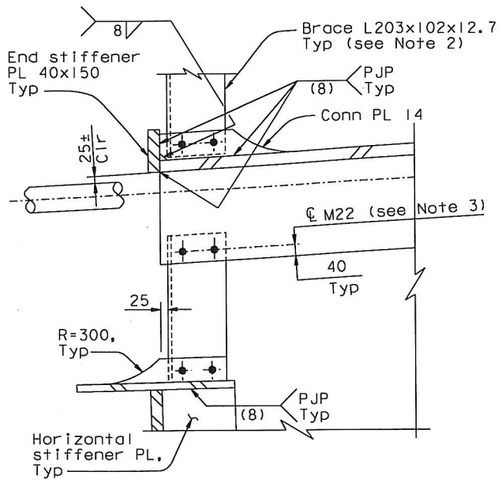

ALTERNATIVE DETAIL B
1:10

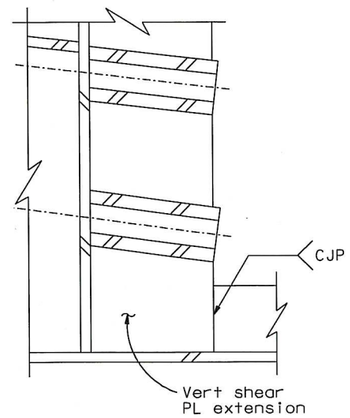

VIEW J-J Shown (View J'-J' Similar)
1:10

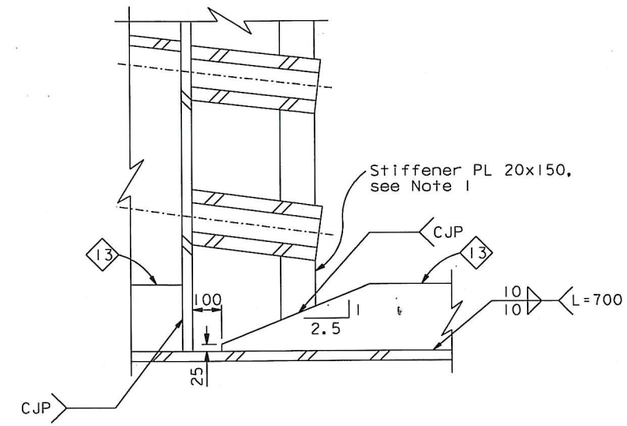

VIEW K-K Shown (View K'-K' Similar)
1:10

NOTES:

1. Bottom stiffener PL 20x150 shall align with stiffener type 13.
2. At the Contractor's option, PL 25x200 may be used in lieu of the L203x102x12.7.
3. At the Contractor's option, bolts may be moved to 50 mm from the face of the vertical shear PL, and the L203 or PL 25 extended, to provide additional clearance from the strands, subject to the review and approval of the Engineer.

100 % PS&E

CONTRACT CHANGE ORDER NO. 87
SHEET 88 OF 115

REQUESTS FOR INFORMATION NOT ADDRESSED IN THIS CCO REMAIN IN FORCE

ALL DIMENSIONS ARE IN MILLIMETERS UNLESS OTHERWISE SHOWN

R. Valizadeh/V. Toan/Y.L./W.L./F.C.
DESIGN OVERSIGHT
SIGN OFF DATE 04/18/12

MARK	DATE	DESCRIPTIONS	BY	CH'D	CCO#
0	04/18/12	EAST END OBG	MN	GB	87

REVISIONS

DESIGN	BY G. Baker	CHECKED M. Nader	
DETAILS	BY G. Baker	CHECKED D. Turner	
QUANTITIES	BY G. Baker	CHECKED D. Turner	

PREPARED FOR THE STATE OF CALIFORNIA DEPARTMENT OF TRANSPORTATION

R. Manzanarez
PROJECT ENGINEER

BRIDGE NO. 34-0006L/R
KILOMETER POST 13.2/13.9

SAN FRANCISCO OAKLAND BAY BRIDGE
EAST SPAN SEISMIC SAFETY PROJECT
SELF-ANCHORED SUSPENSION BRIDGE
(SUPERSTRUCTURE & TOWER)

EAST CABLE ANCHORAGE "E" LINE LAYOUT NO. 2A

Rev. Date: 5-18-98

ORIGINAL SCALE IN MILLIMETERS FOR REDUCED PLANS 0 10 20 30 40 50 60 70 80 90 100

CU 04
EA 0120F1

DISREGARD PRINTS BEARING EARLIER REVISION DATES

REVISION DATES (PRELIMINARY STAGE ONLY) 04/18/12

SHEET 315S1 OF

FILE => I:\bb\04-012001\sas\contract plans and cco\cco\cco#87\temp\agan105s1.dgn

USERNAME => DWinrow DATE PLOTTED => 18 APR 2012 TIME PLOTTED => 11:26:21

DIST.	COUNTY	ROUTE	KILOMETER POST TOTAL PROJECT	SHEET NO.	TOTAL SHEETS
04	SF	80	13.2/13.9	733R4	1204

George Baker
REGISTERED ENGINEER - CIVIL
12-6-04
PLANS APPROVAL DATE

REGISTERED PROFESSIONAL ENGINEER George S. Baker No. C57112 Exp. 12/31/05 CIVIL STATE OF CALIFORNIA

The State of California or its officers or agents shall not be responsible for the accuracy or completeness of electronic copies of this plan sheet.

T.Y. LIN / MOFFATT & NICHOL
825 BATTERY STREET
SAN FRANCISCO, CA 94111

Caltrans now has a web site! To get to the web site, go to: Http://www.dot.ca.gov

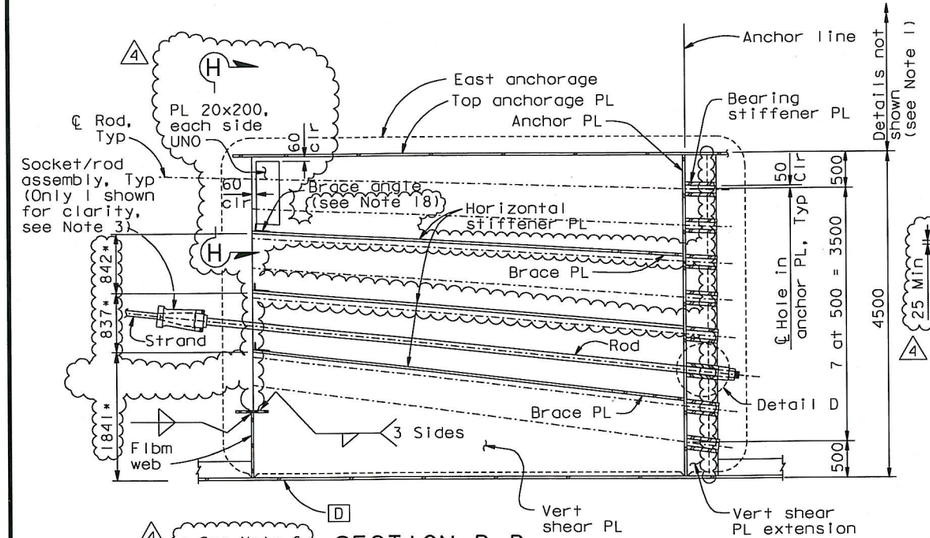

SECTION D-D
1:40

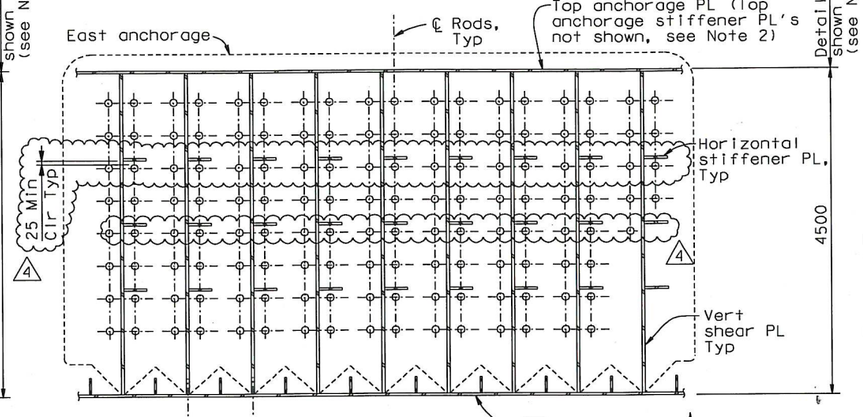

SECTION E-E
1:40

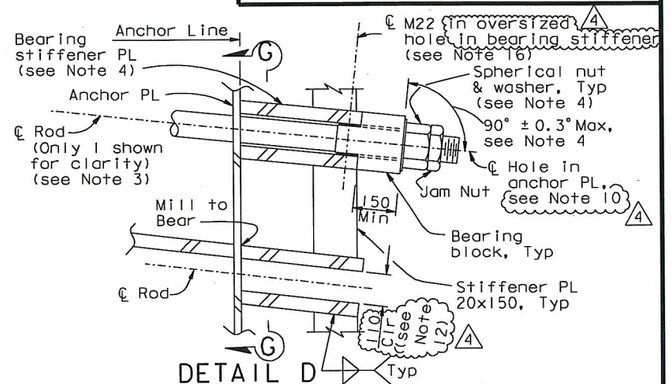

DETAIL D
1:10

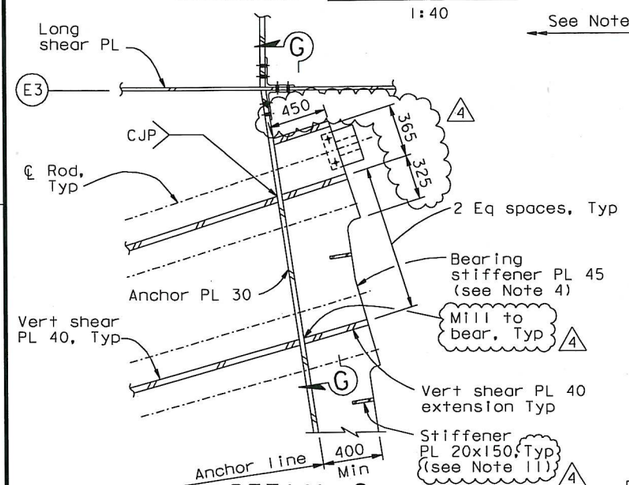

DETAIL C
1:20

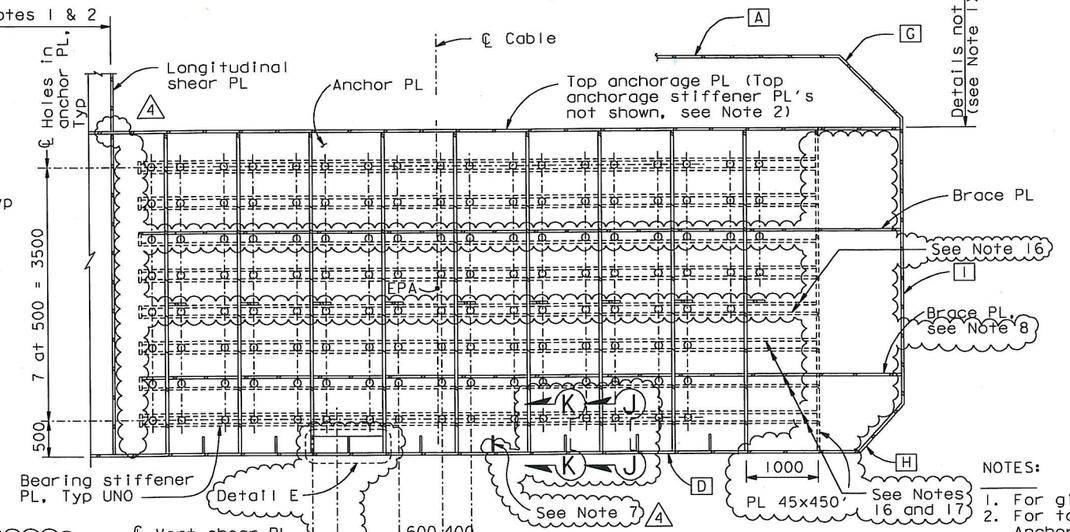

SECTION F-F
1:40

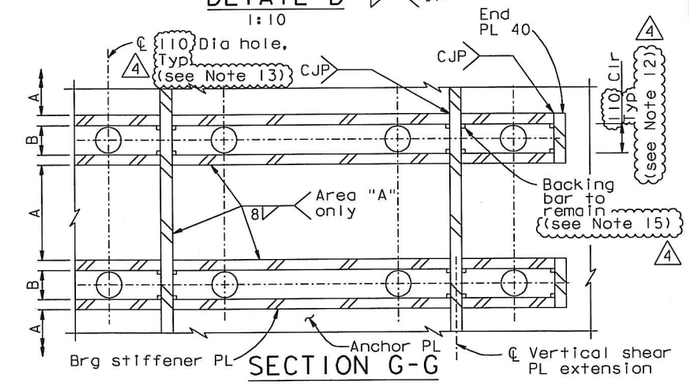

SECTION G-G
1:10

NOTES:

1. For girder details not shown, see "Girder At East Transition" sheets.
2. For top anchorage PL details not shown, see "Crossbeam At East Anchorage" and "Girder At East Transition" sheets.
3. For strand socket, transition anchor rod and bearing block details, see "East Cable Anchorage Details" sheet.
4. Bearing stiffener PL shall be machined to level the bearing block under the nut. The installation tolerance for the bearing block/anchor rod angle is ±1°. Also see Note 6 on "East Cable Anchorage "E" Line Layout No. 2" sheet.
5. For View H-H and Detail E, see "East Cable Anchorage "E" Line Layout No. 3B" sheet.
6. Dimensions shown with an asterisk shall be adjusted as necessary to provide 25 mm Min clearance above the strand and 50 mm Min below the strand.
7. Type 13 stiffeners shall terminate at each face of anchor PL with CJP welds.
8. Face 1 stiffeners shall terminate 100 clear of brace PL as required. For stiffener termination details, see "Typical Girder Details No. 16" sheet.

4

9. For Views J-J and K-K, see "East Cable Anchorage "E" Line Layout No. 2A" sheet.
10. The Contractor may drill the 110 mm Dia holes in the anchor PL normal to the anchor PL instead of along the anchor rod axis.
11. In cases where the top most stiffener PL 20x150 would interfere with bolts in the top anchorage PL, the top most stiffener only shall be relocated to the nearest position that is 60 mm clear of bolt ℄.

4

12. At the Contractor's option, clear spacing between bearing stiffener PL's may be increased to 130mm.
13. At the Contractor's option, anchor rod hole may be increased to 120mm Dia.
14. For Notes 15 and above, see "East Cable Anchorage "E" Line Layout No. 3A" sheet.

ALL DIMENSIONS ARE IN MILLIMETERS UNLESS OTHERWISE SHOWN

PROFESSIONAL ENGINEER Marwan N. Nader No. C 054426 Exp. 12/31/13 CIVIL STATE OF CALIFORNIA

FOR REVISIONS ONLY

CONTRACT CHANGE ORDER NO. 87
SHEET 89 OF 115

REQUESTS FOR INFORMATION NOT ADDRESSED IN THIS CCO REMAIN IN FORCE

MARK	DATE	DESCRIPTIONS	BY	CH'D	CCO#
4	03/21/12	EAST END OBG	GB	MN	87
3	03/25/11	SUSPENSION CABLE MISCELLANEOUS DETAILS	DT	GB	185
2	01/28/11	MISCELLANEOUS CABLE SYSTEM DETAILS	DT	GB	37S1
1	08/28/09	BEARING BLOCKS	DT	GB	78

REVISIONS

R. Valizadeh/V. Toan/Y.L./W.L./F.C.
DESIGN OVERSIGHT
Roya Valizadeh / Vong Toan / Y Liu
SIGN OFF DATE 03/21/12

Rev. Date: 5-18-98

	BY	CHECKED
DESIGN	G. Baker	J. Kulike
DETAILS	M. Guylas	T. McMeans
QUANTITIES	M. Guylas	M. Roberts

PREPARED FOR THE STATE OF CALIFORNIA DEPARTMENT OF TRANSPORTATION

R. Manzanarez
PROJECT ENGINEER

BRIDGE NO. 34-0006L/R
KILOMETER POST 13.2/13.9

CU 04
EA 0120F1

DISREGARD PRINTS BEARING EARLIER REVISION DATES

REVISION DATES (PRELIMINARY STAGE ONLY): 01/15/99 05/15/99 08/05/99 05/14/01 04/08/02 07/01/02 12/18/02 11/13/05

SHEET 316R4 OF

ORIGINAL SCALE IN MILLIMETERS FOR REDUCED PLANS 0 10 20 30 40 50 60 70 80 90 100

FILE => I:\bb\04-012001\sas\contract plans and cco\cco\cco#87\3-update 03-21-12\dgn\agan106.dgn

SAN FRANCISCO OAKLAND BAY BRIDGE
EAST SPAN SEISMIC SAFETY PROJECT
SELF-ANCHORED SUSPENSION BRIDGE
(SUPERSTRUCTURE & TOWER)

EAST CABLE ANCHORAGE "E" LINE LAYOUT NO. 3

100 % PS&E

USERNAME => DWinrow DATE PLOTTED => 21 MAR 2012 TIME PLOTTED => 11:50:26

DIST.	COUNTY	ROUTE	KILOMETER POST TOTAL PROJECT	SHEET NO.	TOTAL SHEETS
04	SF	80	13.2/13.9	733S1	1204

REGISTERED ENGINEER - CIVIL

09-01-11
PLANS APPROVAL DATE

REGISTERED PROFESSIONAL ENGINEER
Marwan N. Nader
No. C 054426
Exp. 12/31/11
CIVIL
STATE OF CALIFORNIA

The State of California or its officers or agents shall not be responsible for the accuracy or completeness of electronic copies of this plan sheet.

T.Y. LIN / MOFFATT & NICHOL
825 BATTERY STREET
SAN FRANCISCO, CA 94111

Caltrans now has a web site! To get to the web site, go to: http://www.dot.ca.gov

NOTES:

15. At the Contractor's option, a PJP (E = 45 mm) may be used in lieu of a CJP with backing. The upper 50 mm portion of weld shall remain as a CJP.

16. At the Contractor's option, mill to bear requirement between bearing stiffener PL and anchor PL may be waived.

17. At the Contractor's option, the weld between bearing stiffener PL and vertical shear PL extension may be one-side 25 mm fillet weld.

18. At the Contractor's option, a PL 25x200 may be used in lieu of a brace angle.

CONTRACT CHANGE ORDER NO. 87
SHEET 90 OF 115

REQUESTS FOR INFORMATION NOT ADDRESSED IN THIS CCO REMAIN IN FORCE

ALL DIMENSIONS ARE IN MILLIMETERS UNLESS OTHERWISE SHOWN

R. Vallizadeh/V. Toan/Y.L./W.L./F.C.
DESIGN OVERSIGHT
SIGN OFF DATE 09/01/11

MARK	DATE	DESCRIPTIONS	BY	CH'D	CCO#
0	09/01/11	EAST END OBG	GB	MN	87

REVISIONS

DESIGN	BY G. Baker	CHECKED M. Nader	
DETAILS	BY G. Baker	CHECKED M. Nader	
QUANTITIES	BY G. Baker	CHECKED M. Nader	

PREPARED FOR THE STATE OF CALIFORNIA DEPARTMENT OF TRANSPORTATION

R. Manzanarez
PROJECT ENGINEER

BRIDGE NO. 34-0006L/R
KILOMETER POST 13.2/13.9

SAN FRANCISCO OAKLAND BAY BRIDGE
EAST SPAN SEISMIC SAFETY PROJECT
SELF-ANCHORED SUSPENSION BRIDGE
(SUPERSTRUCTURE & TOWER)

EAST CABLE ANCHORAGE "E" LINE LAYOUT NO. 3A

Rev. Date: 5-18-98

ORIGINAL SCALE IN MILLIMETERS FOR REDUCED PLANS 0 10 20 30 40 50 60 70 80 90 100

CU 04
EA 0120F1

DISREGARD PRINTS BEARING EARLIER REVISION DATES → 09/01/11

REVISION DATES (PRELIMINARY STAGE ONLY)

SHEET 316S1 OF

FILE => I:\bb\04-012001\sas\contract plans and cco\cco\cco#87\1-original 09-01-11\dgn\agan106a.dgn

100% PS&E

DATE PLOTTED => 30 AUG 2011 TIME PLOTTED => 10:08:42

USERNAME => PTom

DIST.	COUNTY	ROUTE	KILOMETER POST TOTAL PROJECT	SHEET NO.	TOTAL SHEETS
04	SF	80	13.2/13.9	733S2	1204

REGISTERED ENGINEER - CIVIL

04-18-12
PLANS APPROVAL DATE

REGISTERED PROFESSIONAL ENGINEER Marwan N. Nader No. C 054426 Exp. 12/31/13 CIVIL STATE OF CALIFORNIA

The State of California or its officers or agents shall not be responsible for the accuracy or completeness of electronic copies of this plan sheet.

T.Y. LIN / MOFFATT & NICHOL
825 BATTERY STREET
SAN FRANCISCO, CA 94111

Caltrans now has a web site! To get to the web site, go to: http://www.dot.ca.gov

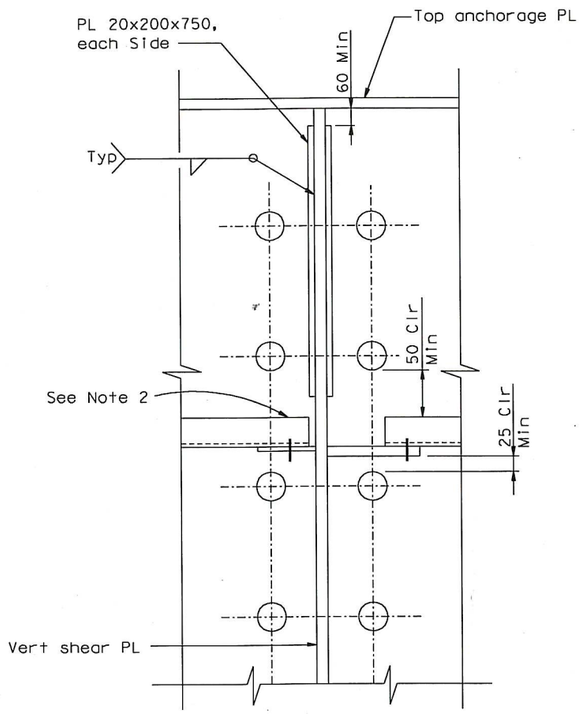

TYPE 1

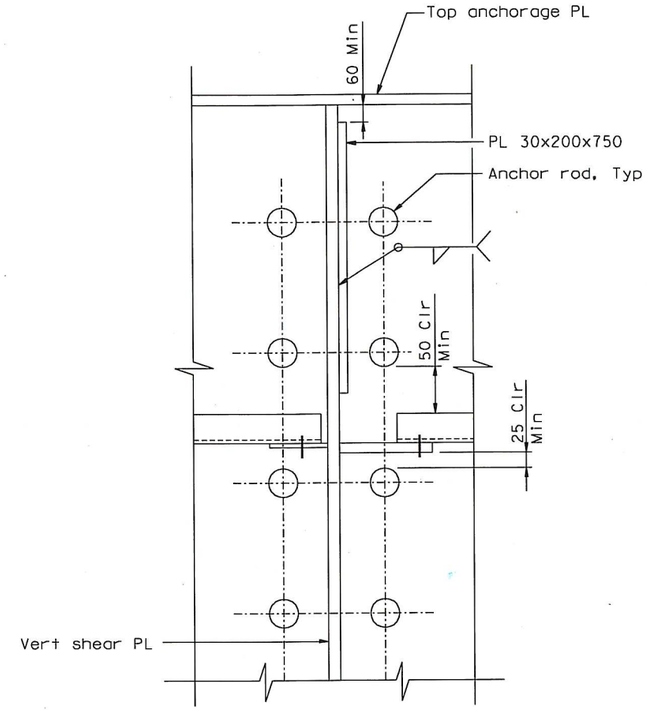

TYPE 2

VIEW H-H (See Note 1)
1:10

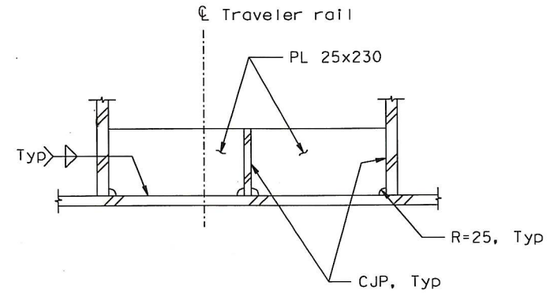

DETAIL E (Detail E' opposite hand)
1:10

NOTES:

1. Use Type 1 layout at all vertical shear PL except for the two southernmost shear plates on the E-Line where Type 2 shall be used.

2. Trim angle as required to clear strand.

100 % PS&E

USERNAME => DWinrow DATE PLOTTED => 18 APR 2012 TIME PLOTTED => 11:27:10

CONTRACT CHANGE ORDER NO. 87
SHEET 91 OF 115

REQUESTS FOR INFORMATION NOT ADDRESSED IN THIS CCO REMAIN IN FORCE

ALL DIMENSIONS ARE IN MILLIMETERS UNLESS OTHERWISE SHOWN

R. Valizadeh/V. Toan/Y.L./W.L./F.C.
DESIGN OVERSIGHT
SIGN OFF DATE 04/18/12

MARK	DATE	DESCRIPTIONS	BY	CH'D	CCO#
0	04/18/12	EAST END OBG	MN	GB	87

REVISIONS

	BY	CHECKED
DESIGN	G. Baker	M. Nader
DETAILS	G. Baker	D. Turner
QUANTITIES	G. Baker	D. Turner

PREPARED FOR THE STATE OF CALIFORNIA DEPARTMENT OF TRANSPORTATION

R. Manzanarez
PROJECT ENGINEER

BRIDGE NO. 34-0006L/R
KILOMETER POST 13.2/13.9

SAN FRANCISCO OAKLAND BAY BRIDGE
EAST SPAN SEISMIC SAFETY PROJECT
SELF-ANCHORED SUSPENSION BRIDGE
(SUPERSTRUCTURE & TOWER)
EAST CABLE ANCHORAGE "E" LINE LAYOUT NO. 3B

Rev. Date: 5-18-98

ORIGINAL SCALE IN MILLIMETERS FOR REDUCED PLANS 0 10 20 30 40 50 60 70 80 90 100

CU 04
EA 0120F1

DISREGARD PRINTS BEARING EARLIER REVISION DATES 04/18/12

REVISION DATES (PRELIMINARY STAGE ONLY)

SHEET 316S2 OF

FILE => I:\bb\04-012001\sas\contract plans and cco\cco\cco#87\temp\agan106b.dgn

NOTES:

1. For details of longitudinal shear plate between P125 and PP127, see "Girder At East Transition No.16" sheet.
2. For details of splice connection at girder plate and vertical plate convergence, see "East Cable Anchorage Details" sheet.
3. For strand socket and anchor rod details, see "East Cable Anchorage Details" sheet.
4. For Detail C and Sections D-D, E-E and F-F, see "East Cable Anchorage "W" Line Layout No.3" sheet.
5. Machining of bearing stiffener not shown in plan view.
6. The bearing blocks shall be aligned with the bearing stiffener plates. The angle between the bearing block and the anchor rod may vary (up to 90° ± 0.3° Max) due to the averaging of the bearing stiffeners orientation across each row of anchors.
7. At the Contractor's option, a PL 25x200 may be used in lieu of a brace angle.
8. At the Contractor's option, bolts may be moved to 50 mm from the face of the vertical shear PL, and the L203 or PL 25 extended, to provide additional clearance from the strands, subject to the review and approval of the Engineer.

DIST.	COUNTY	ROUTE	KILOMETER POST TOTAL PROJECT	SHEET NO.	TOTAL SHEETS
04	SF	80	13.2/13.9	735R4	1204

George Baker
REGISTERED ENGINEER - CIVIL
12-6-04
PLANS APPROVAL DATE

REGISTERED PROFESSIONAL ENGINEER George S. Baker No. C 57112 Exp. 12/31/05 CIVIL STATE OF CALIFORNIA

The State of California or its officers or agents shall not be responsible for the accuracy or completeness of electronic copies of this plan sheet.

T.Y. LIN / MOFFATT & NICHOL
825 BATTERY STREET
SAN FRANCISCO, CA 94111

Caltrans now has a web site! To get to the web site, go to: http://www.dot.ca.gov

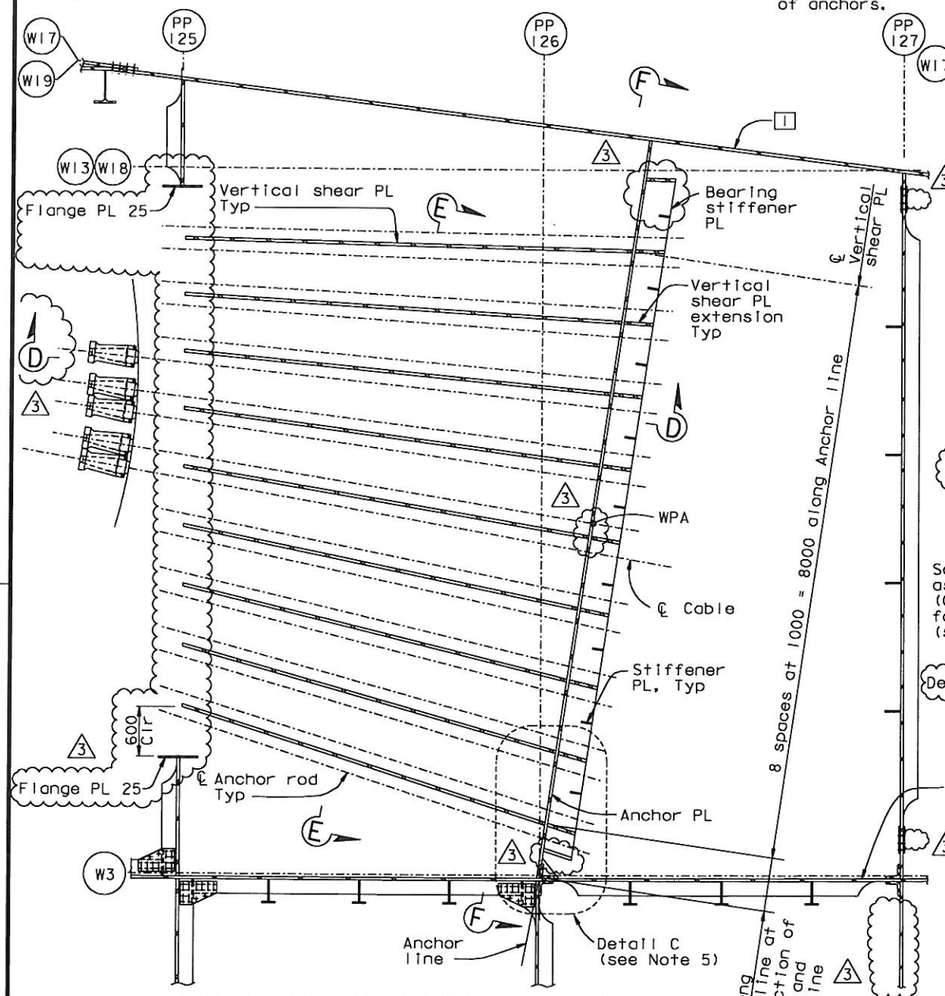

AT LEVEL OF TYPICAL BEARING STIFFENER

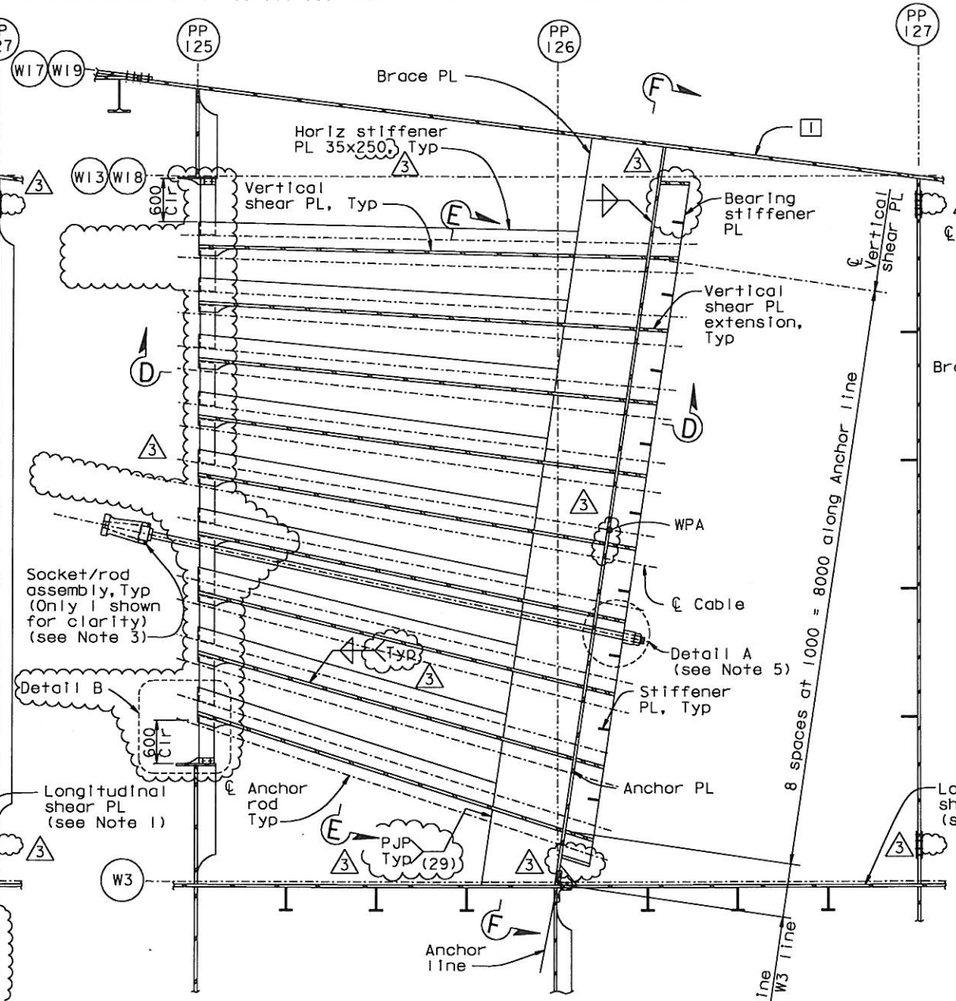

AT LEVEL OF BRACE PLATE

PLAN SECTION C-C
1:40

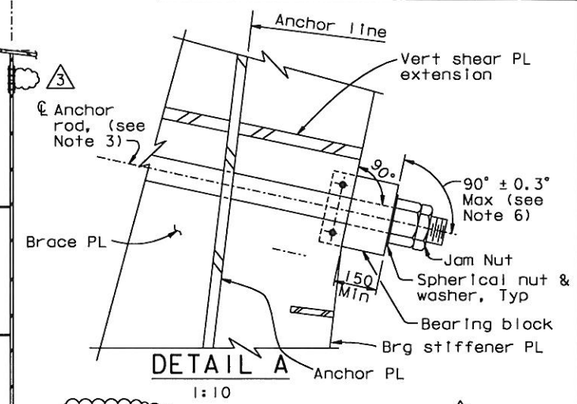

DETAIL A
1:10

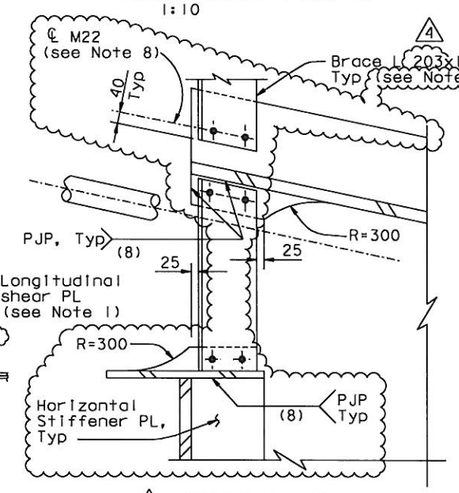

DETAIL B
1:10

ALL DIMENSIONS ARE IN MILLIMETERS UNLESS OTHERWISE SHOWN

REGISTERED PROFESSIONAL ENGINEER Morwan N. Nader No. C 054426 Exp. 12/31/13 CIVIL STATE OF CALIFORNIA

FOR REVISIONS ONLY

CONTRACT CHANGE ORDER NO. 87
SHEET 92 OF 115

REQUESTS FOR INFORMATION NOT ADDRESSED IN THIS CCO REMAIN IN FORCE

MARK	DATE	DESCRIPTIONS	BY	CH'D	CCO#
4	01/04/13	EAST END OBG	MN	DT	87
3	09/01/11	EAST END OBG	MN	DT	87
2	04/08/11	SUSPENSION CABLE MISCELLANEOUS DETAILS	GB	MN	185
1	01/28/11	MISCELLANEOUS CABLE SYSTEM DETAILS	GB	MN	3751

REVISIONS

R. Vallzadeh/V. Toan/Y.L./W.L./F.C.
DESIGN OVERSIGHT
SIGN OFF DATE 01/04/13

Rev. Date: 5-18-98

	BY	CHECKED
DESIGN	G. Baker	J. Kullkl
DETAILS	M. Gulyas	T. McMeans
QUANTITIES	M. Gulyas	M. Roberts

PREPARED FOR THE STATE OF CALIFORNIA DEPARTMENT OF TRANSPORTATION

R. Manzanarez
PROJECT ENGINEER

BRIDGE NO. 34-0006L/R
KILOMETER POST 13.2/13.9

SAN FRANCISCO OAKLAND BAY BRIDGE
EAST SPAN SEISMIC SAFETY PROJECT
SELF-ANCHORED SUSPENSION BRIDGE
(SUPERSTRUCTURE & TOWER)

EAST CABLE ANCHORAGE "W" LINE LAYOUT NO. 2

ORIGINAL SCALE IN MILLIMETERS FOR REDUCED PLANS 0 10 20 30 40 50 60 70 80 90 100

CU 04
EA 0120F1

DISREGARD PRINTS BEARING EARLIER REVISION DATES

REVISION DATES (PRELIMINARY STAGE ONLY) 01/25/99 05/27/99 08/26/99 05/24/01 04/26/02 07/24/02 12/24/02 11/13/05

SHEET 318R4 OF

FILE => L:\BB\04-012001\SAS\Contract Plans and CCO\CCO\CCO#87\5-Revision 01-04-13\DGN\ogan108.dgn

100% PS&E

USERNAME => DWinrow DATE PLOTTED => 04 JAN 2013 TIME PLOTTED => 09:57:42

Caltrans now has a web site! To get to the web site, go to: http://www.dot.ca.gov

DIST.	COUNTY	ROUTE	KILOMETER POST TOTAL PROJECT	SHEET NO.	TOTAL SHEETS
04	SF	80	13.2/13.9	736R5	1204

George Baker
REGISTERED ENGINEER - CIVIL
12-6-04
PLANS APPROVAL DATE

REGISTERED PROFESSIONAL ENGINEER George S. Baker No. C 57112 Exp. 12/31/05 CIVIL STATE OF CALIFORNIA

The State of California or its officers or agents shall not be responsible for the accuracy or completeness of electronic copies of this plan sheet.

T.Y. LIN / MOFFATT & NICHOL
825 BATTERY STREET
SAN FRANCISCO, CA 94111

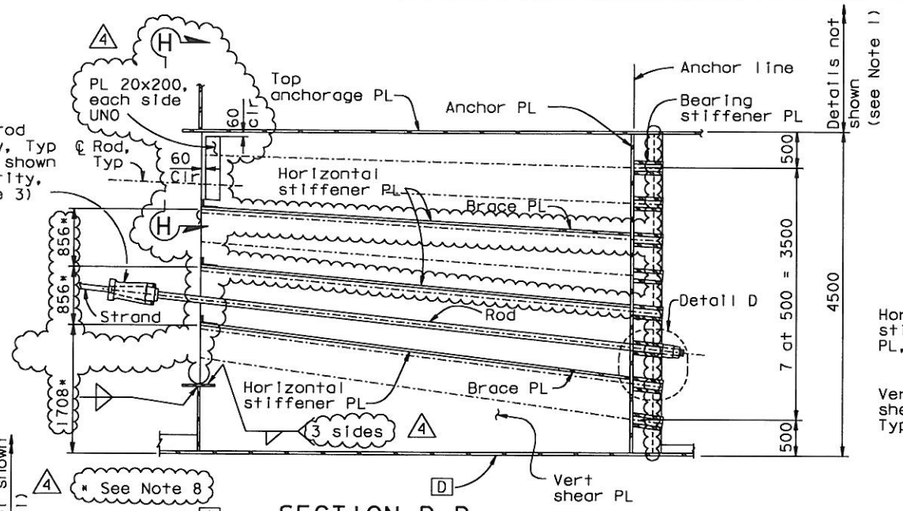

SECTION D-D
1:40

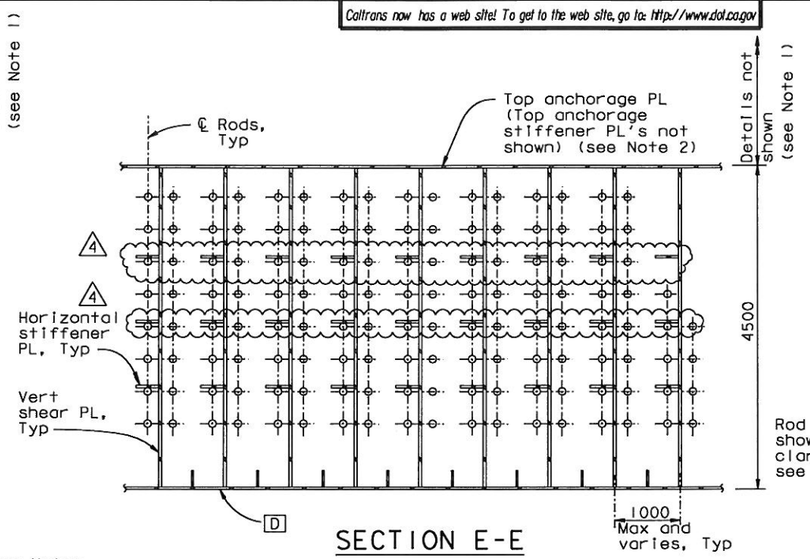

SECTION E-E
1:40

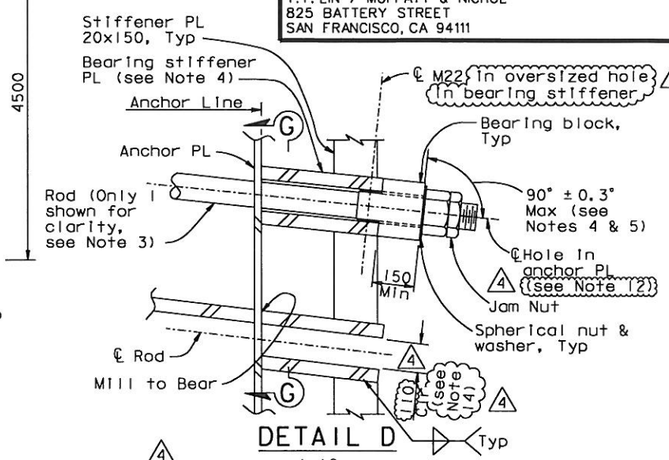

DETAIL D
1:10

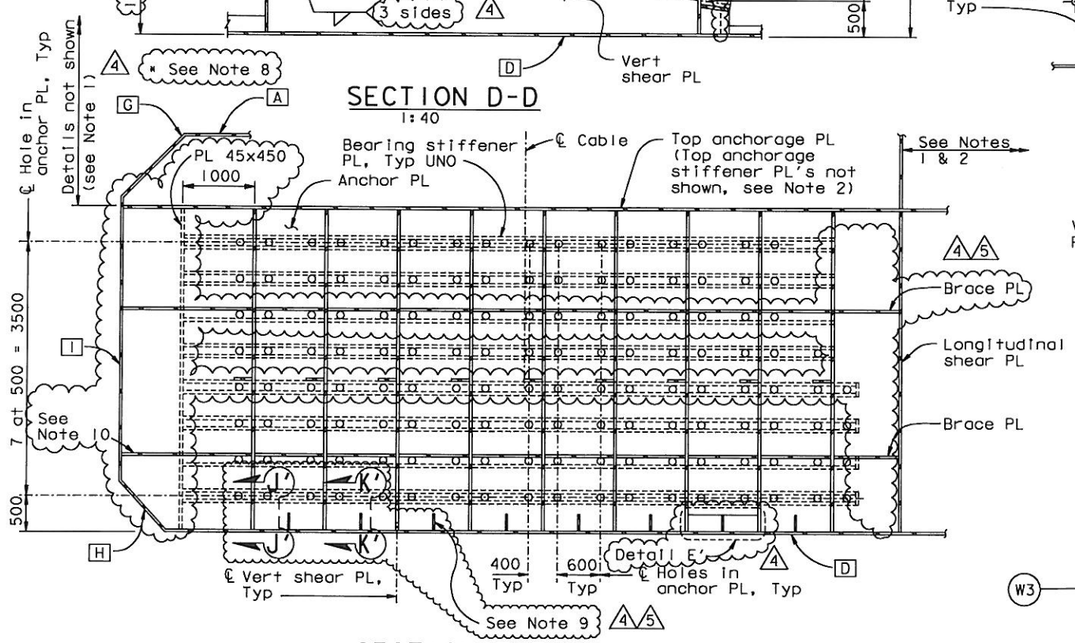

SECTION F-F
1:40

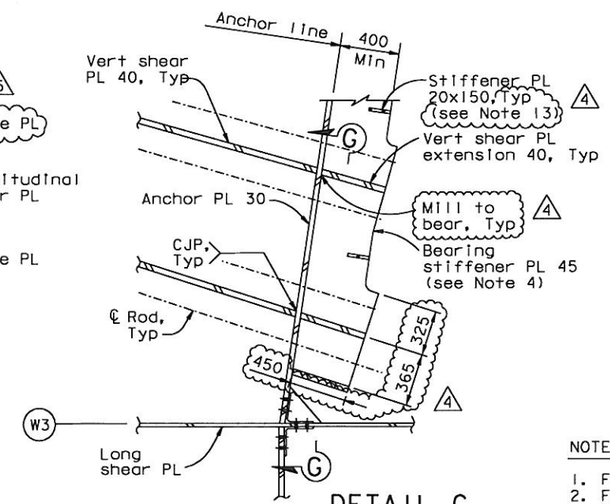

DETAIL C
1:20

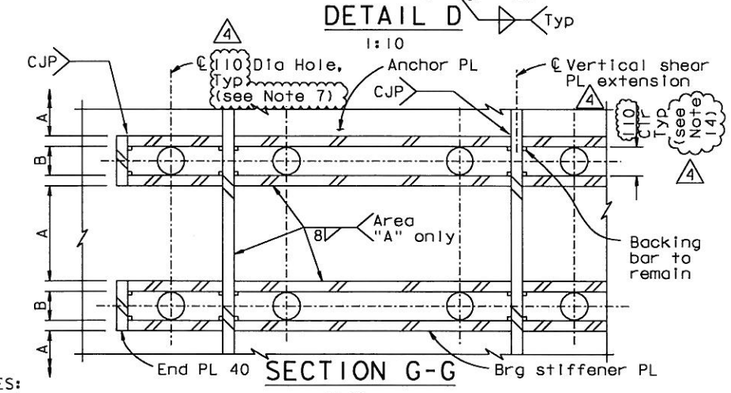

SECTION G-G
1:10

NOTES:

1. For girder details not shown, see "Girder At East Transition" sheets.
2. For top anchorage PL details not shown, see "Crossbeam At East Anchorage" and "Girder At East Transition" sheets.
3. For strand socket, transition anchor rod and bearing block details, see "East Cable Anchorage Details" sheet.
4. Bearing stiffeners plates shall be machined to level the bearing block under the nut. The installation tolerance for the bearing block/anchor rod angle is ±1°. Also see Note 6 on "East Cable Anchorage "W" Line Layout No. 2" sheet.
5. The bearing blocks shall be aligned with the bearing stiffener plates. The angle between the bearing block and the anchor rod may vary (up to 90° ±0.3° Max) due to the averaging of the bearing stiffeners across each row of anchors.
6. For View H-H and Detail E', see "East Cable Anchorage "E" Line Layout No. 3B" sheet.
7. At the Contractor's option, anchor rod hole may be increased to 120 mm Dia.
8. Dimensions shown with an asterisk shall be adjusted as necessary to provide 25 mm Min clearance above the strand and 50 mm Min below the strand.
9. All stiffeners shall terminate at each face of anchor PL with CJP welds.
10. Face 1 stiffeners shall terminate 100 clear of brace PL as required. For stiffener termination details, see "Typical Girder Details No. 16" sheet.
11. For Views J'-J' and K'-K', see "East Anchorage "E" Line Layout No. 2A" sheet.
12. The Contractor may drill the 110 mm Dia holes in the anchor PL normal to the anchor PL instead of along the anchor rod axis.
13. In cases where the top most stiffener PL 20x150 would interfere with bolts in the top anchorage PL, the top most stiffener only shall be relocated to the nearest position that is 60 mm clear of bolt ℄.
14. At the Contractor's option, clear spacing between bearing stiffener PL's may be increased to 130 mm.

ALL DIMENSIONS ARE IN MILLIMETERS UNLESS OTHERWISE SHOWN

REGISTERED PROFESSIONAL ENGINEER Marwan N. Nader No. C 054426 Exp. 12/31/13 CIVIL STATE OF CALIFORNIA

FOR REVISIONS ONLY

CONTRACT CHANGE ORDER NO. 87
SHEET 93 OF 115

REQUESTS FOR INFORMATION NOT ADDRESSED IN THIS CCO REMAIN IN FORCE

MARK	DATE	DESCRIPTIONS	BY	CH'D	CCO#
5	01/04/13	EAST END OBG	GB	MN	87
4	09/01/11	EAST END OBG	GB	MN	87
3	03/25/11	SUSPENSION CABLE MISCELLANEOUS DETAILS	DT	GB	185
2	01/28/11	MISCELLANEOUS CABLE SYSTEM DETAILS	DT	GB	3751
1	08/28/09	BEARING BLOCKS	DT	GB	78

REVISIONS

R. Vallzadeh/V. Toan/Y.L./W.L./F.C.
DESIGN OVERSIGHT
Roya Vallzadeh / Vong Toan / Y. Liu
SIGN OFF DATE 01/04/13

Rev. Date: 5-18-98

	BY	CHECKED	
DESIGN	G. Baker	J. Kulikl	
DETAILS	M. Guiyas	T. McMeans	
QUANTITIES	M. Guiyas	M. Roberts	

PREPARED FOR THE STATE OF CALIFORNIA DEPARTMENT OF TRANSPORTATION

R. Manzanarez
PROJECT ENGINEER

BRIDGE NO. 34-0006L/R
KILOMETER POST 13.2/13.9

SAN FRANCISCO OAKLAND BAY BRIDGE
EAST SPAN SEISMIC SAFETY PROJECT
SELF-ANCHORED SUSPENSION BRIDGE
(SUPERSTRUCTURE & TOWER)

EAST CABLE ANCHORAGE "W" LINE LAYOUT NO. 3

ORIGINAL SCALE IN MILLIMETERS FOR REDUCED PLANS 0 10 20 30 40 50 60 70 80 90 100

CU 04
EA 0120F1

DISREGARD PRINTS BEARING EARLIER REVISION DATES

REVISION DATES (PRELIMINARY STAGE ONLY) 01/25/99 05/25/99 09/28/99 05/31/01 04/08/02 07/24/02 12/13/02 11/13/03

SHEET 319R5 OF

FILE => L:\BB\04-012001\SAS\Contract Plans and CCO\CCO\CCO#87\5-Revision 01-04-13\DGN\ogan109.dgn

100 % PS&E

USERNAME => DWinrow DATE PLOTTED => 04 JAN 2013 TIME PLOTTED => 09:55:18

DIST.	COUNTY	ROUTE	KILOMETER POST TOTAL PROJECT	SHEET NO.	TOTAL SHEETS
04	SF	80	13.2/13.9	737R4	1204

Caltrans Metric

George Baker
REGISTERED ENGINEER - CIVIL
12-6-04
PLANS APPROVAL DATE

REGISTERED PROFESSIONAL ENGINEER George S. Baker No. C 57112 Exp. 12/31/05 CIVIL STATE OF CALIFORNIA

The State of California or its officers or agents shall not be responsible for the accuracy or completeness of electronic copies of this plan sheet.

T.Y. LIN / MOFFATT & NICHOL
825 BATTERY STREET
SAN FRANCISCO, CA 94111

Caltrans now has a web site! To get to the web site, go to: http://www.dot.ca.gov

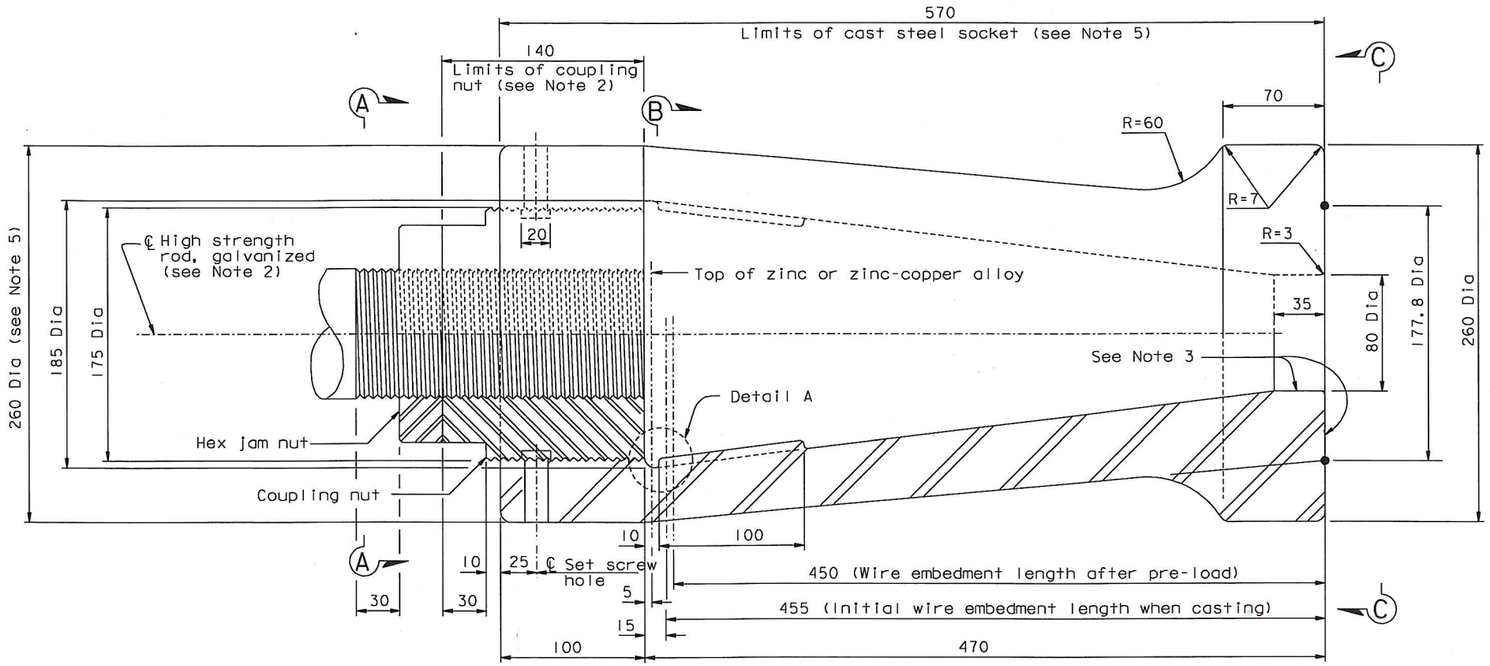

SOCKET DETAIL
1:2

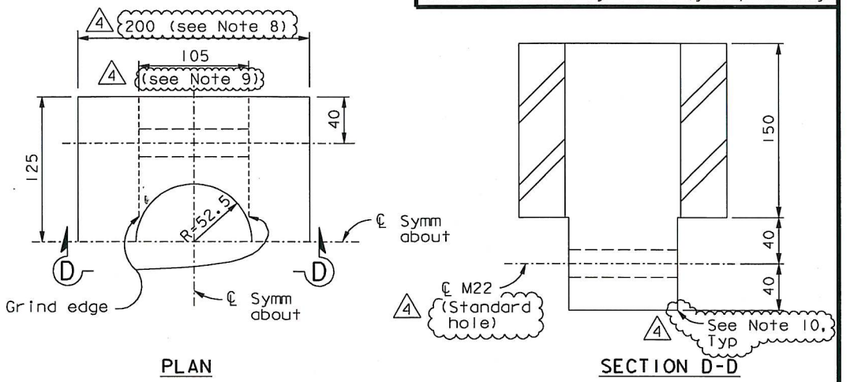

PLAN

SECTION D-D

BEARING BLOCK DETAIL (See Note 6)
1:2.5

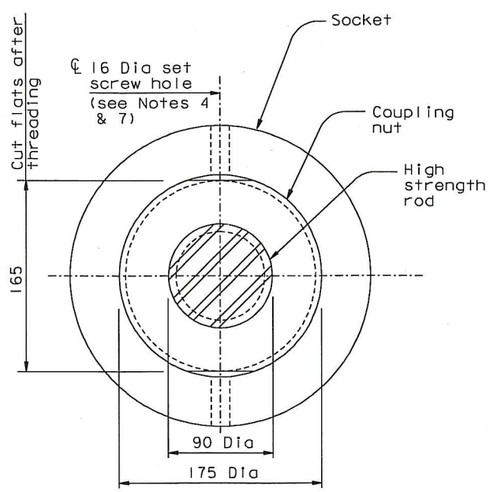

VIEW A-A
1:2.5

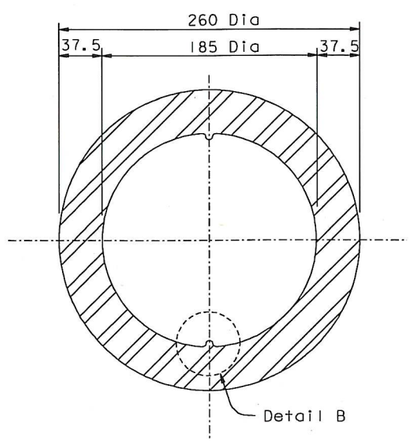

SECTION B-B
1:2.5

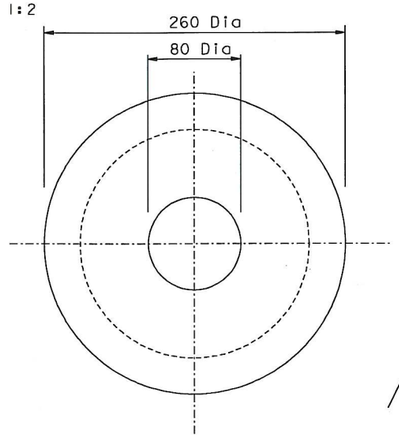

VIEW C-C
1:2.5

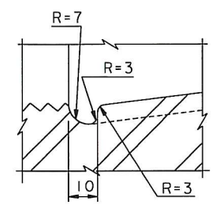

DETAIL A
1:1

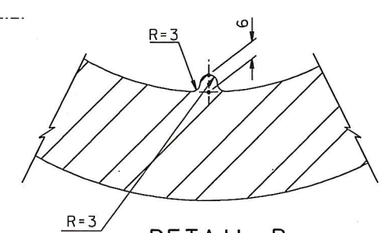

DETAIL B
1:1

NOTES:

1. Coupling nut and socket shall conform to ASTM A194 GR 7, with 4 threads per inch.
2. For main cable strand anchor rod and cable strand socket materials, see "General Notes" sheets.
3. Surface shall be finished to ANSI 500.
4. Provide 16 Dia stainless set screws in threaded hole.
5. All socket dimensions are for information only. The Contractor shall develop socket details consistent with his means and methods and the east cable anchorage geometry, and shall submit them to the Engineer for review and approval. The socket dimensions shall be such that adequate prestressing and erection clearance is provided.
6. Material for bearing blocks shall be ASTM A668 Grade F, or ASTM A148 Grade 550-345.
7. Thread locking compound shall be used to secure the coupling nut set screws.
8. (4) Dimension shall be increased to 250 mm in the case when the clear spacing between Bearing stiffener PL's is 130 mm.
9. Dimension shall be increased to 118 mm in the case when the clear spacing between Bearing stiffener PL's is 130 mm.
10. At the Contractor's option, a 26x26 chamfer may be used.

100 % PS&E

REGISTERED PROFESSIONAL ENGINEER Marwan N. Nader No. C 054426 Exp. 12/31/11 CIVIL STATE OF CALIFORNIA

FOR REVISIONS ONLY

CONTRACT CHANGE ORDER NO. 87
SHEET 94 OF 115

REQUESTS FOR INFORMATION NOT ADDRESSED IN THIS CCO REMAIN IN FORCE

MARK	DATE	DESCRIPTIONS	BY	CH'D	CCO#
4	09/01/11	EAST END OBG	GB	MN	87
3	04/08/11	SUSPENSION CABLE MISCELLANEOUS DETAILS	DT	GB	185
2	02/18/11	MISCELLANEOUS CABLE SYSTEM DETAILS	DT	GB	37S1
1	08/28/09	BEARING BLOCKS	DT	GB	78

REVISIONS

ALL DIMENSIONS ARE IN MILLIMETERS UNLESS OTHERWISE SHOWN

R. Valizadeh/V. Toan/Y.L./W.L./F.C.
DESIGN OVERSIGHT
SIGN OFF DATE 09/01/11

	BY	CHECKED
DESIGN	G. Baker	J. Kulikl
DETAILS	M. Gulyas	T. McMeans
QUANTITIES	M. Gulyas	M. Roberts

PREPARED FOR THE STATE OF CALIFORNIA DEPARTMENT OF TRANSPORTATION

R. Manzanarez
PROJECT ENGINEER

BRIDGE NO. 34-0006L/R
KILOMETER POST 13.2/13.9

SAN FRANCISCO OAKLAND BAY BRIDGE
EAST SPAN SEISMIC SAFETY PROJECT
SELF-ANCHORED SUSPENSION BRIDGE
(SUPERSTRUCTURE & TOWER)

EAST CABLE ANCHORAGE DETAILS

Rev. Date: 5-18-98

ORIGINAL SCALE IN MILLIMETERS FOR REDUCED PLANS 0 10 20 30 40 50 60 70 80 90 100

CU 04
EA 0120F1

DISREGARD PRINTS BEARING EARLIER REVISION DATES

REVISION DATES (PRELIMINARY STAGE ONLY) 08/28/99 05/24/01 09/06/02 07/01/02 12/15/02

SHEET 320R4 OF

FILE => I:\bb\04-01200I\sas\contract plans and cco\cco\cco#87\I-original 09-01-11\dgn\agand08a.dgn

USERNAME => PTom DATE PLOTTED => 30 AUG 2011 TIME PLOTTED => 09:34:57

DIST.	COUNTY	ROUTE	KILOMETER POST TOTAL PROJECT	SHEET NO.	TOTAL SHEETS
04	SF	80	13.2/13.9	740R3	1204

REGISTERED ENGINEER - CIVIL

12/19/02
PLANS APPROVAL DATE

REGISTERED PROFESSIONAL ENGINEER Marwan N. Nader No. C 054426 Exp. 12/31/11 CIVIL STATE OF CALIFORNIA

The State of California or its officers or agents shall not be responsible for the accuracy or completeness of electronic copies of this plan sheet.

T.Y. LIN / MOFFATT & NICHOL
825 BATTERY STREET
SAN FRANCISCO, CA 94111

Caltrans now has a web site! To get to the web site, go to: http://www.dot.ca.gov

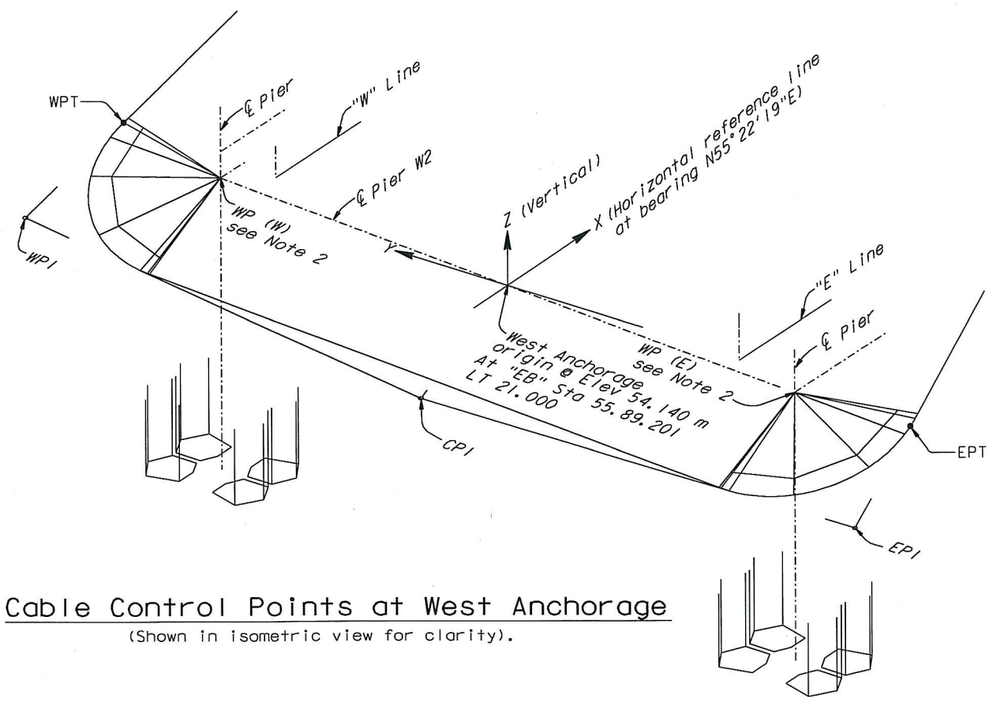

Cable Control Points at West Anchorage

(Shown in isometric view for clarity).

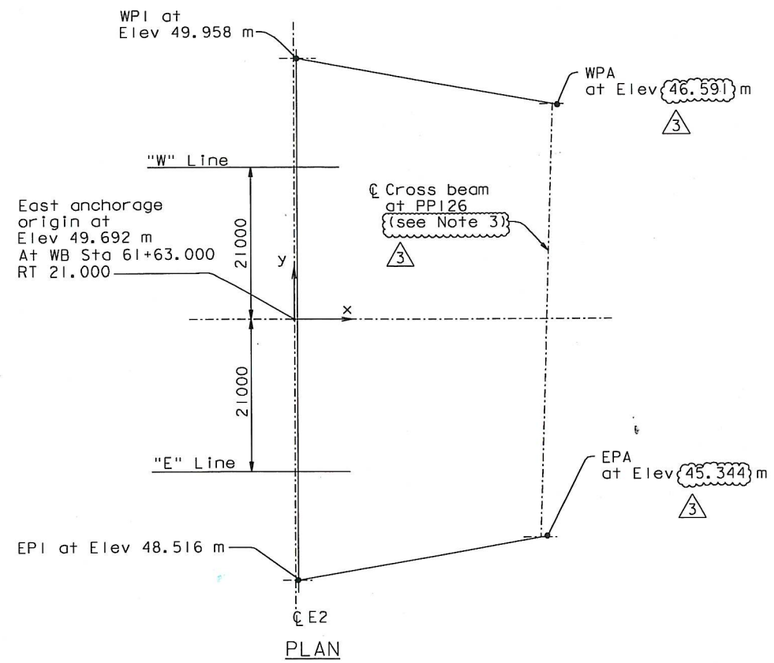

PLAN

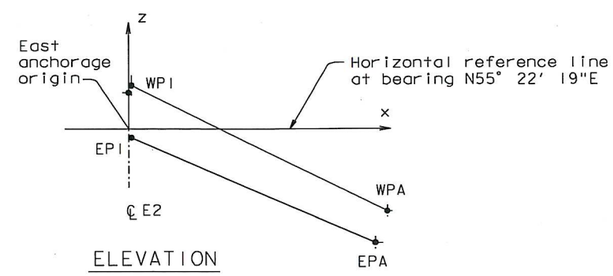

ELEVATION

Cable Control Points at East Anchorage

COORDINATES OF CONTROL POINTS OF WEST ANCHORAGE
(WEST ANCHORAGE COORDINATE SYSTEM)

	"W" Line Saddle WP	"E" Line Saddle WP	WPT	WPI	CPI	EPT	EPI
X	30	-7	1318	-8804	-11278	1587	-8804
Y	26024	-25978	36396	38086	101	-36352	-38084
Z	1057	-1059	2060	-2411	-5080	-765	-5530

COORDINATES OF CONTROL POINTS OF EAST ANCHORAGE
(EAST ANCHORAGE COORDINATE SYSTEM)

	WPI	WPA	EPI	EPA
X	393	36012	393	34281
Y	36045	29653	-36025	-30140
Z	266	-3101	-1176	-4348

3 3

NOTES:

1. At the west anchorage the cable profile shall be determined from the EPT and WPT. Geometry of saddles shall conform to EPI, WPI and CPI.
2. WP(W) & WP(E) do not coincide with ℄ Pier W2, ℄ Pier W2E nor ℄ Pier W2W.
3. WPA and EPA do not coincide with ℄ crossbeam at PP 126.

CONTRACT CHANGE ORDER NO. 87
SHEET 95 OF 115

REQUESTS FOR INFORMATION NOT ADDRESSED IN THIS CCO REMAIN IN FORCE

MARK	DATE	DESCRIPTIONS	BY	CH'D	CCO#
3	09/01/11	EAST END OBG	MN	DT	87
2	04/16/07	CABLE SYSTEM	GB	MN	37
1	01/31/07	WEST DEVIATION SADDLE GEOMETRY	AS	MN	15

REVISIONS

R. Valizadeh/V. Toan/Y.L./W.L./F.C.
DESIGN OVERSIGHT
SIGN OFF DATE 09/01/11

Rev. Date: 5-18-98

DESIGN BY M. Nader CHECKED S. Rodriguez
DETAILS BY C. Mibelli CHECKED S. Rodriguez
QUANTITIES BY C. Mibelli CHECKED G. Baker

PREPARED FOR THE STATE OF CALIFORNIA DEPARTMENT OF TRANSPORTATION

R. Manzanarez
PROJECT ENGINEER

ALL DIMENSIONS ARE IN MILLIMETERS UNLESS OTHERWISE SHOWN

ORIGINAL SCALE IN MILLIMETERS FOR REDUCED PLANS 0 10 20 30 40 50 60 70 80 90 100

BRIDGE NO. 34-0006L/R
KILOMETER POST 13.2/13.9

SAN FRANCISCO OAKLAND BAY BRIDGE
EAST SPAN SEISMIC SAFETY PROJECT
SELF-ANCHORED SUSPENSION BRIDGE
(SUPERSTRUCTURE & TOWER)

SUSPENSION CABLE LAYOUT NO. 3

CU 04
EA 0120F1

DISREGARD PRINTS BEARING EARLIER REVISION DATES
REVISION DATES (PRELIMINARY STAGE ONLY) 05/15/99 08/02/99 05/31/01 04/08/02 07/01/02 12/19/02

SHEET 323R3 OF

FILE => I:\bb\04-01200I\sas\contract plans and cco\cco#87\1-original 09-01-11\dgn\agsc103.dgn

100 % PS&E

USERNAME => ALIshansky DATE PLOTTED => 30 AUG 2011 TIME PLOTTED => 13:30:15

DIST.	COUNTY	ROUTE	KILOMETER POST TOTAL PROJECT	SHEET NO.	TOTAL SHEETS
04	SF	80	13.2/13.9	785R1	1204

George Baker
REGISTERED ENGINEER - CIVIL

12-6-04
PLANS APPROVAL DATE

REGISTERED PROFESSIONAL ENGINEER George S. Baker No. C 57112 Exp. 12/31/05 CIVIL STATE OF CALIFORNIA

The State of California or its officers or agents shall not be responsible for the accuracy or completeness of electronic copies of this plan sheet.

T.Y. LIN / MOFFATT & NICHOL
825 BATTERY STREET
SAN FRANCISCO, CA 94111

Caltrans now has a web site! To get to the web site, go to: http://www.dot.ca.gov

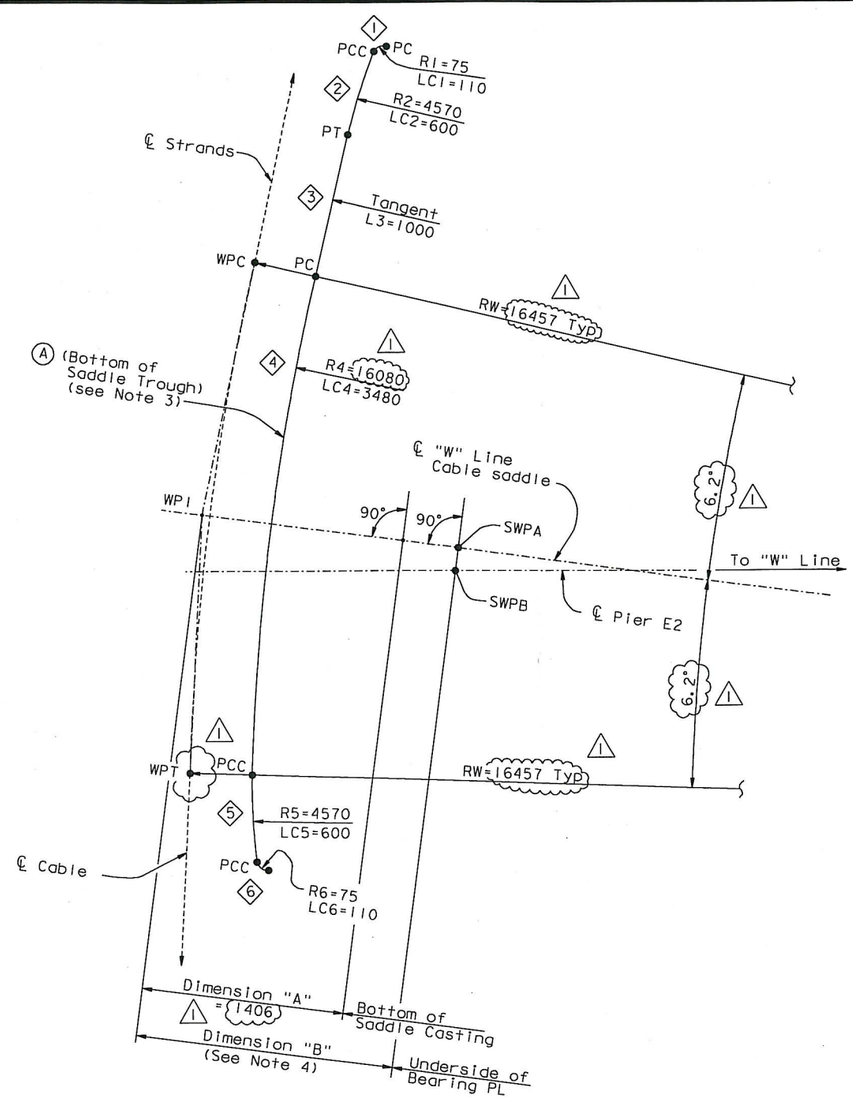

"W" LINE CABLE

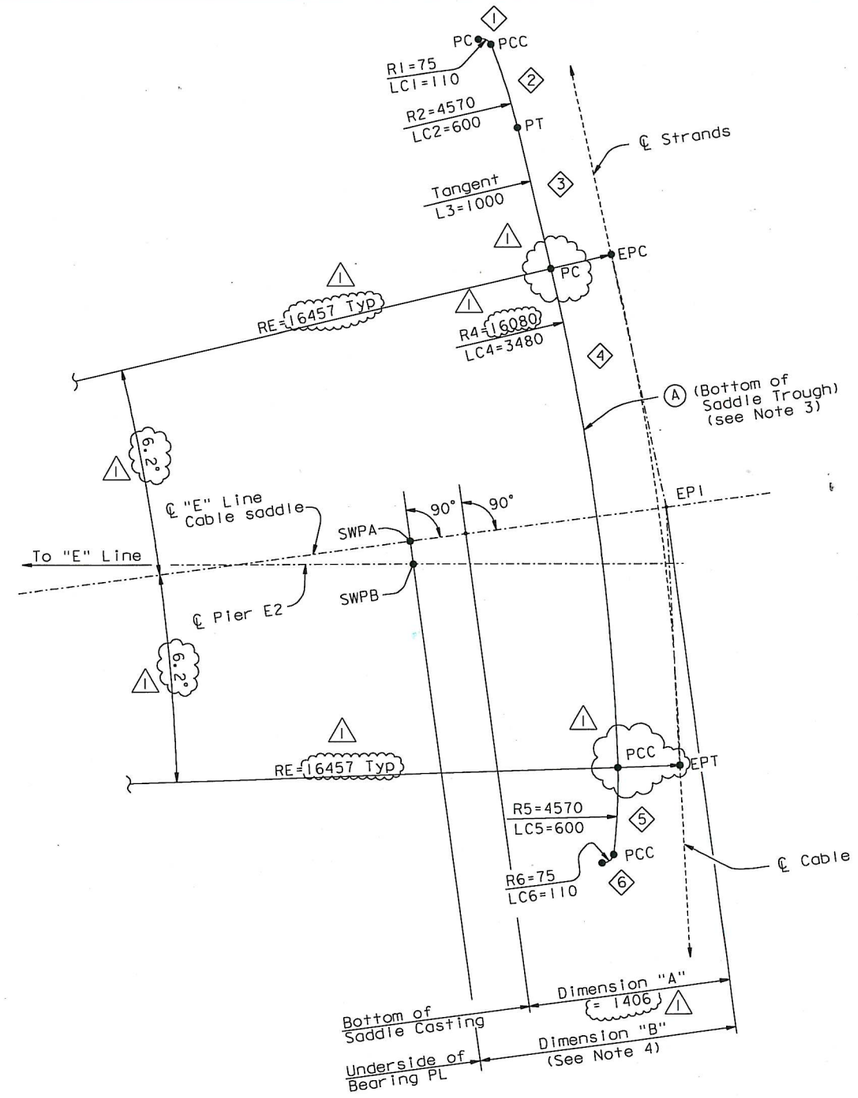

"E" LINE CABLE

EAST SADDLE TROUGH LAYOUT

1:20

LEGEND:

(A) - Trough level A (Bottom of Trough)

(3) - Trough segment No. 3

ABBREVIATIONS:

- EPC - Point of curvature of "E" Line cable
- EPI - Point of intersection of "E" Line cable
- EPT - Point of tangency of "E" Line cable
- L3 - Length, trough segment 3
- LC4 - Length of curve, trough segment 4
- NA - Not applicable
- PC - Point of curvature
- PCC - Point of compound curvature
- PT - Point of tangency
- RE - Radius for "E" Line cable
- RW - Radius for "W" Line cable
- R1 - Radius for bottom of trough, trough segment 1
- SWP - Working point
- SWPA - Point of intersection of underside of bearing PL and CL East saddle
- SWPB - Point of intersection of underside of bearing PL and CL Pier E2
- WPC - Point of curvature of "W" Line cable
- WPI - Point of intersection of "W" Line cable
- WPT - Point of tangency of "W" Line cable

NOTES:

1. Geometry shown for "E" Line cable and saddle is in plane of cable at EPI. Geometry shown for "W" Line cable and saddle is in plane of cable at WPI.
2. For EPI and WPI control information, see "Suspension Cable Layout No. 3" sheet.
3. For details of trough layout , see "East Saddle Details No. 4" sheet.
4. For dimension "B", see "East Saddle Details No. 3" and "East Saddle Details No. 6" sheets.
5. The location of EPT and WPT can change with the cable profile. The Contractor shall determine EPT and WPT based on the actual constructed weight.

REGISTERED PROFESSIONAL ENGINEER Marwan N. Nader No. C 054426 Exp. 12/31/13 CIVIL STATE OF CALIFORNIA

FOR REVISIONS ONLY

CONTRACT CHANGE ORDER NO. 87
SHEET 96 OF 115

REQUESTS FOR INFORMATION NOT ADDRESSED IN THIS CCO REMAIN IN FORCE

ALL DIMENSIONS ARE IN MILLIMETERS UNLESS OTHERWISE SHOWN

R. Vallzadeh/V. Toan/Y.L./W.L./F.C.
DESIGN OVERSIGHT
SIGN OFF DATE 04/18/12

MARK	DATE	DESCRIPTIONS	BY	CH'D	CCO#
1	04/18/12	EAST END OBG	MN	GB	87

REVISIONS

DESIGN	BY	G. Baker	CHECKED	J. Kuliki
DETAILS	BY	M. Gulyas	CHECKED	T. McMeans
QUANTITIES	BY	D. Turner	CHECKED	D. Harrison

PREPARED FOR THE STATE OF CALIFORNIA DEPARTMENT OF TRANSPORTATION

R. Manzanarez
PROJECT ENGINEER

BRIDGE NO. 34-0006L/R
KILOMETER POST 13.2/13.9

SAN FRANCISCO OAKLAND BAY BRIDGE
EAST SPAN SEISMIC SAFETY PROJECT
SELF-ANCHORED SUSPENSION BRIDGE
(SUPERSTRUCTURE & TOWER)

EAST SADDLE DETAILS NO. 2

Rev. Date: 5-18-98

ORIGINAL SCALE IN MILLIMETERS FOR REDUCED PLANS 0 10 20 30 40 50 60 70 80 90 100

CU 04
EA 0120F1

DISREGARD PRINTS BEARING EARLIER REVISION DATES

REVISION DATES (PRELIMINARY STAGE ONLY) 08/02/99 05/23/01 04/26/02 07/29/02 12/19/02

SHEET 368R1 OF

FILE => I:\bb\04-01200I\sas\contract plans and cco\cco\cco#87\temp\ggsdd10.dgn

100 % PS&E

DATE PLOTTED => 18 APR 2012 TIME PLOTTED => 11:28:32

USERNAME => DWinrow

Caltrans now has a web site! To get to the web site, go to: http://www.dot.ca.gov

DIST.	COUNTY	ROUTE	KILOMETER POST TOTAL PROJECT	SHEET NO.	TOTAL SHEETS
04	SF	80	13.2/13.9	786R1	1204

Caltrans Metric

George Baker
REGISTERED ENGINEER - CIVIL
12-6-04
PLANS APPROVAL DATE

REGISTERED PROFESSIONAL ENGINEER George S. Baker No. C 57112 Exp. 12/31/05 CIVIL STATE OF CALIFORNIA

The State of California or its officers or agents shall not be responsible for the accuracy or completeness of electronic copies of this plan sheet.

T.Y. LIN / MOFFATT & NICHOL
825 BATTERY STREET
SAN FRANCISCO, CA 94111

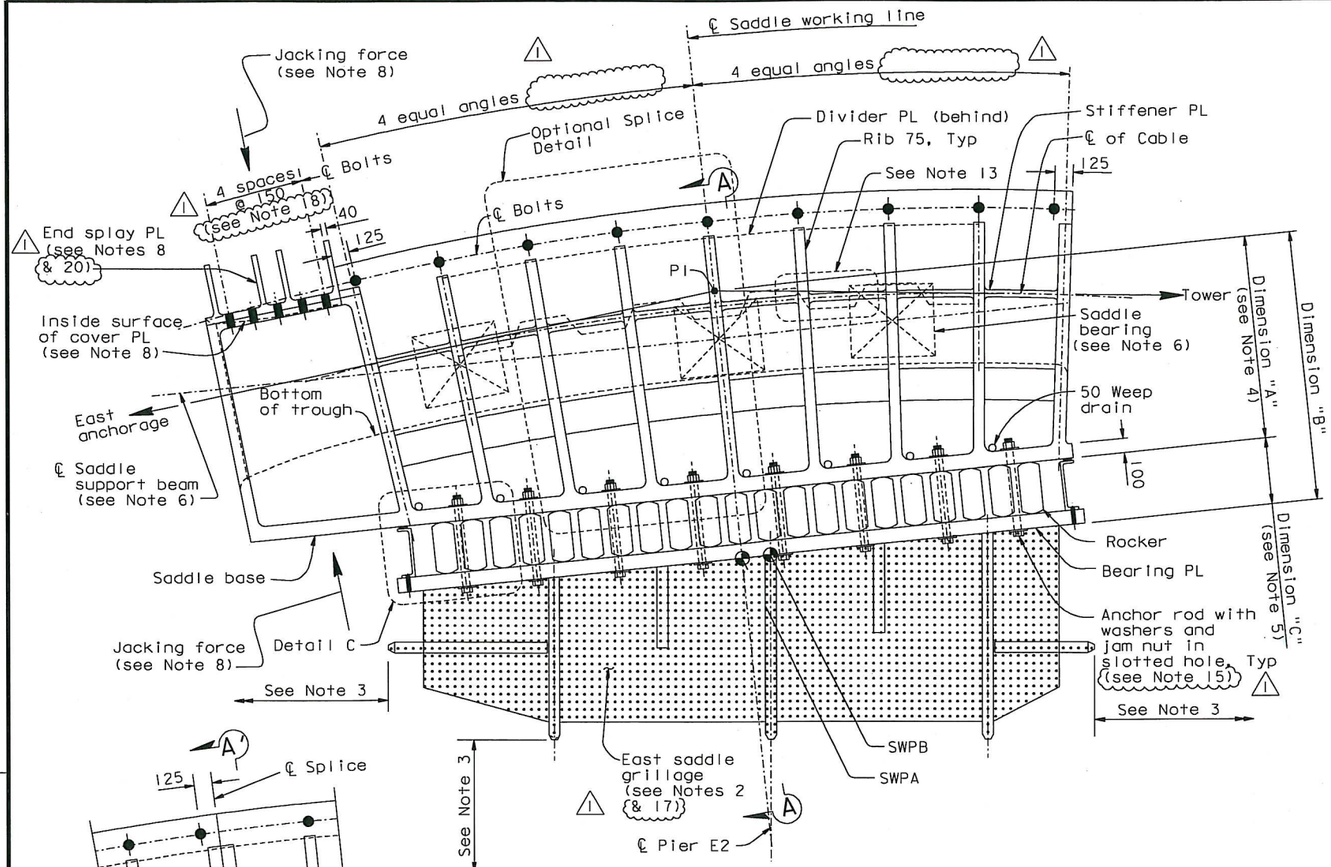

ELEVATION OF TYPICAL EAST SADDLE (IN THE PLANE OF CABLE) (See Note 6)

(Shown for south anchorage, north anchorage similar and opposite hand)

1:20

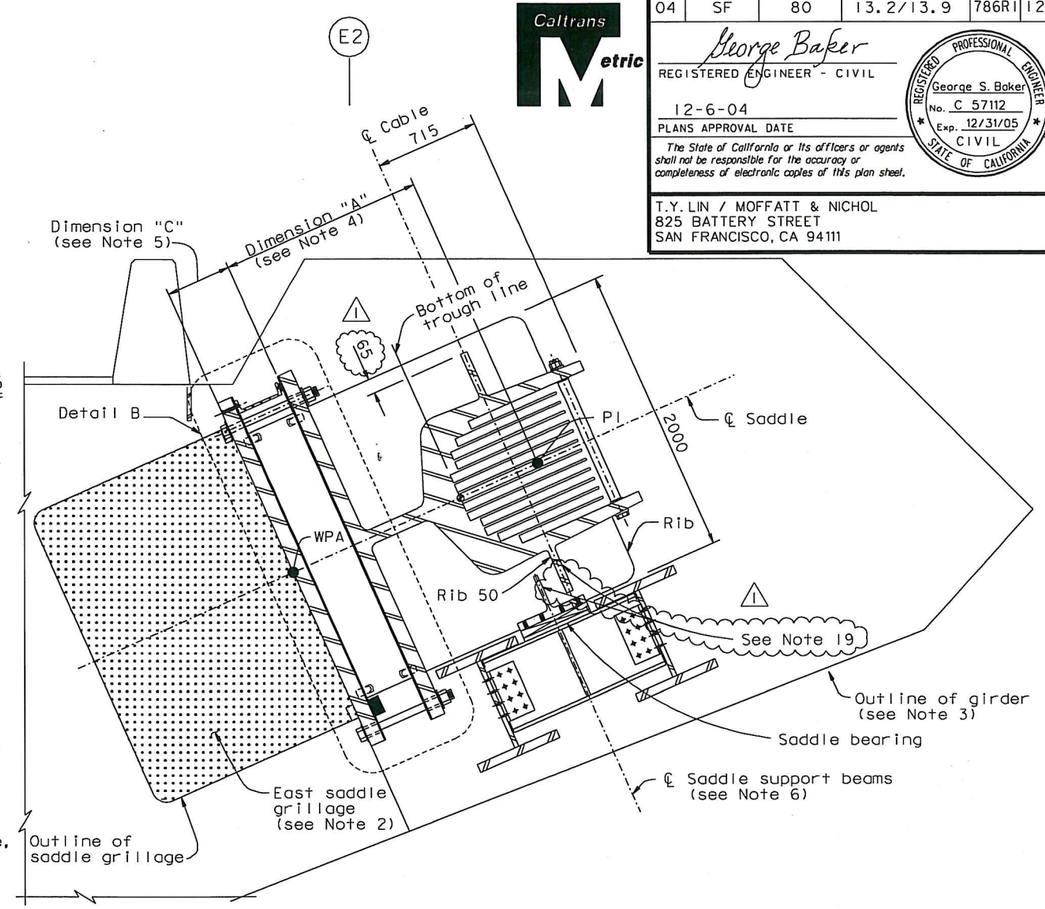

SECTION A-A

1:20

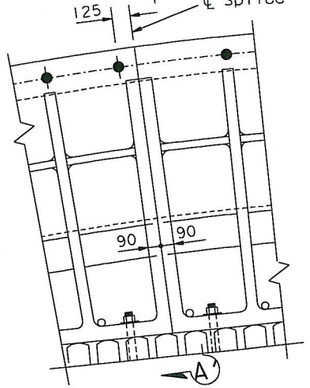

OPTIONAL SPLICE DETAIL

1:20

17. It is acceptable to align the ends of grillage plate A with a projection of the centerline of the outmost saddle ribs, subject to review and approval of the Engineer.
18. Spacing may be adjusted to accomodate jacking, subject to review and approval of the Engineer.
19. It is acceptable to extend the saddle rib to the saddle bearing plate in lieu of the bearing plate web extension subject to review and approval of the Engineer. Where the offset between the saddle rib and the support beam centerlines exceeds 60 mm, the bearing plate shall be thickened to 60 mm.
20. At the Contractor's option, it is acceptable to incorporate permanent diaphragm plates at the end splay plate, subject to review and approval of the Engineer.

10. All surfaces inside the trough shall be machined to ANSI 500 roughness. The geometric tolerance of the surfaces shall not exceed ±1.5 mm per meter of surfaces without sudden kinks.
11. The inside of the troughs shall be metallized with a coating thickness not less than 0.4 mm.
12. All divider plates shall be hot dip galvanized with Class A coating.
13. For detail of Divider PL joint, see "West Deviation Saddle Details No.3" sheet.
14. In the bolted splices the flatness of the faying surfaces shall be ±0.5 mm per meter, and the gap between them shall not exceed 0.5 mm per meter. The perimeters of faying surfaces shall be caulked.
15. Slotted holes may be placed in bearing PL or saddle base PL.
16. The Contractor may propose holes and attachments for erection, subject to review and approval of the Engineer. Upon erection completion, all holes shall be filled with bolts.

NOTES:

1. For Section A'-A', Details B and C, see "East Saddle Details No.6" sheet.
2. For east saddle grillage details, see "Girder At Pier E2 No.5" sheet.
3. For girder details at the east saddle, see "Girder At Pier E2" sheets.
4. For dimension "A", see "East Saddle Details No.2" sheet.
5. For dimension "C", see "East Saddle Details No.6" sheet.
6. For saddle bearings and saddle beam support details, see "East Saddle Details No.7" sheet.
7. For the plane of the cable, see "East Saddle Details No.1" and "East Saddle Details No.2" sheets.
8. End splay plate shall be pressed into place by jacking and bolted to the saddle after completion of cable erection and before load transfer to cable. Total jacking capacity shall be at least 1.9 MN. For end splay PL details, see "East Saddle Details No.5" sheet.
9. Bearing surfaces of rockers shall be finished to ANSI 250 surface roughness. Rocker bearing surfaces shall be finished to ANSI 250 and shall be finished flat to ±0.5 mm per meter of surface length.

100 % PS&E

REGISTERED PROFESSIONAL ENGINEER Marwan N. Nader No. C 054426 Exp. 12/31/11 CIVIL STATE OF CALIFORNIA

FOR REVISIONS ONLY

CONTRACT CHANGE ORDER NO. 87
SHEET 97 OF 115

REQUESTS FOR INFORMATION NOT ADDRESSED IN THIS CCO REMAIN IN FORCE

ALL DIMENSIONS ARE IN MILLIMETERS UNLESS OTHERWISE SHOWN

R. Vallizadeh/V. Toan/Y.L./W.L./F.C.
DESIGN OVERSIGHT
Roya Vallizadeh / Vong Toan / Y. Liu
SIGN OFF DATE 09/01/11

MARK	DATE	DESCRIPTIONS	BY	CH'D	CCO#
1	09/01/11	EAST END OBG	GB	MN	87

REVISIONS

DESIGN	BY G. Baker	CHECKED J. Kuliki	
DETAILS	BY R. Kanitkar	CHECKED T. McMeans	
QUANTITIES	BY D. Turner	CHECKED D. Harrison	

PREPARED FOR THE STATE OF CALIFORNIA DEPARTMENT OF TRANSPORTATION

R. Manzanarez
PROJECT ENGINEER

BRIDGE NO. 34-0006L/R
KILOMETER POST 13.2/13.9

SAN FRANCISCO OAKLAND BAY BRIDGE
EAST SPAN SEISMIC SAFETY PROJECT
SELF-ANCHORED SUSPENSION BRIDGE
(SUPERSTRUCTURE & TOWER)

EAST SADDLE DETAILS NO. 3

Rev. Date: 5-18-98

ORIGINAL SCALE IN MILLIMETERS FOR REDUCED PLANS 0 10 20 30 40 50 60 70 80 90 100

CU 04
EA 0120F1

DISREGARD PRINTS BEARING EARLIER REVISION DATES

REVISION DATES (PRELIMINARY STAGE ONLY): 05/13/99 08/02/99 05/31/01 01/08/02 07/01/02 12/13/02 11/13/03 12/01/05

SHEET 369R1 OF

FILE => I:\bb\04-0120F1\sas\contract plans and cco\cco\cco#87\1-original 09-01-11\dgn\ogsddll.dgn

USERNAME => ALIshansky DATE PLOTTED => 30 AUG 2011 TIME PLOTTED => 13:33:47

11. At the Contractor's option, it is acceptable to use 8 mm fillet welds to connect the MC channels in lieu of the bolted L75x75x7.9, subject to review and approval of the Engineer.

12. At the Contractor's option, MC13x31.8 ASTM A709 grade 36 channels may be used in lieu of MC330x47.3 ASTM A709 grade 50 channels, subject to review and approval of the Engineer.

Caltrans Metric

DIST.	COUNTY	ROUTE	KILOMETER POST TOTAL PROJECT	SHEET NO.	TOTAL SHEETS
04	SF	80	13.2/13.9	789R1	1204

George Baker
REGISTERED ENGINEER - CIVIL
12-6-04
PLANS APPROVAL DATE

REGISTERED PROFESSIONAL ENGINEER George S. Baker No. C 57112 Exp. 12/31/05 CIVIL STATE OF CALIFORNIA

The State of California or its officers or agents shall not be responsible for the accuracy or completeness of electronic copies of this plan sheet.

T.Y. LIN / MOFFATT & NICHOL
825 BATTERY STREET
SAN FRANCISCO, CA 94111

Caltrans now has a web site! To get to the web site, go to: http://www.dot.ca.gov

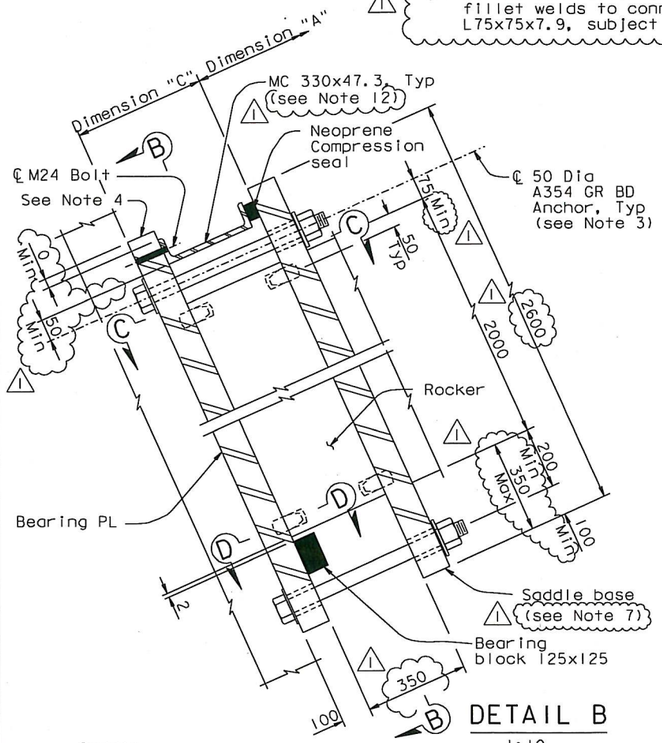

DETAIL B
1:10

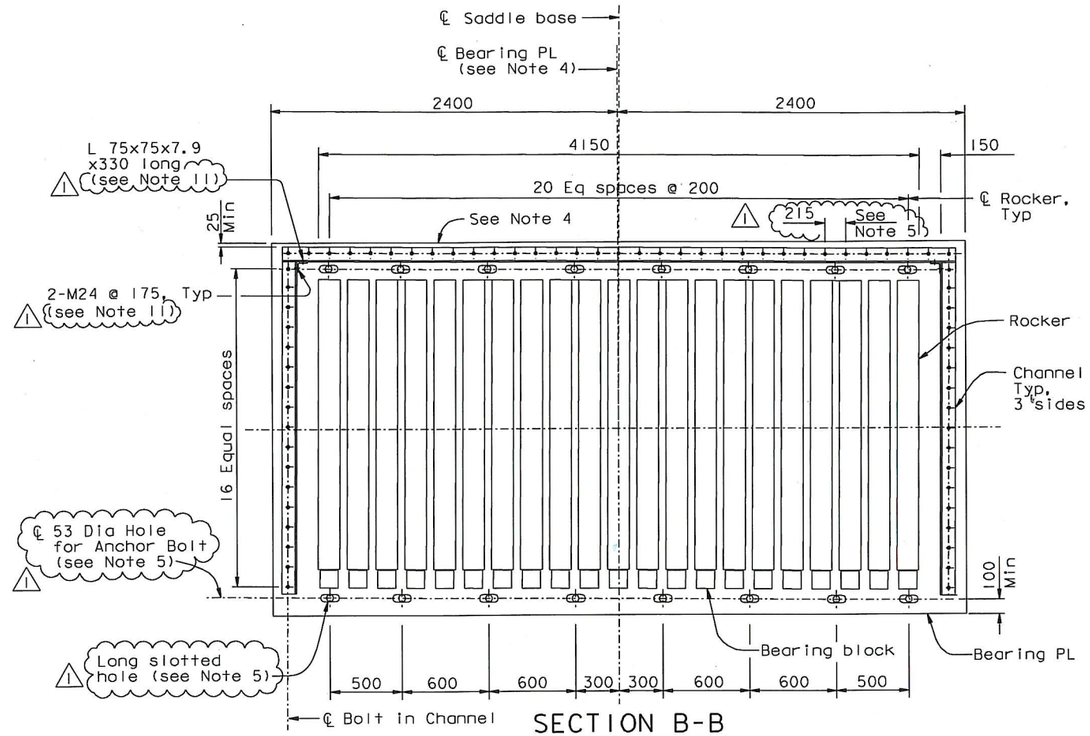

SECTION B-B
1:20

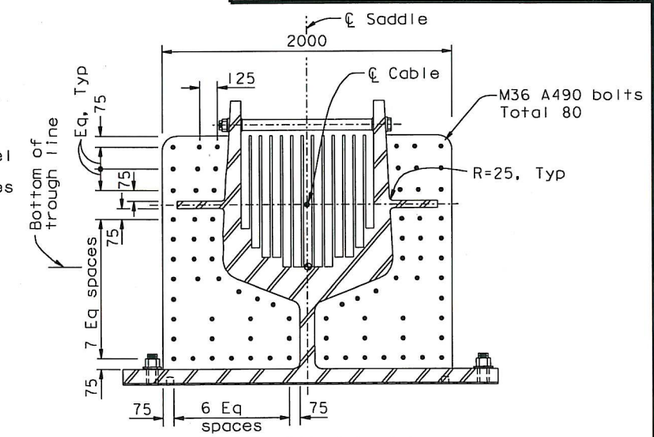

SECTION A'-A'
1:20

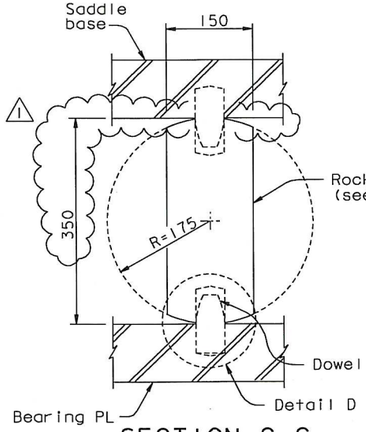

SECTION C-C
1:5

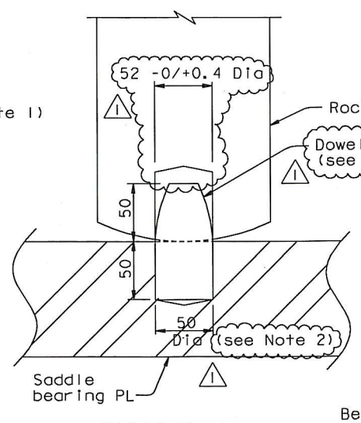

DETAIL D
1:2.5

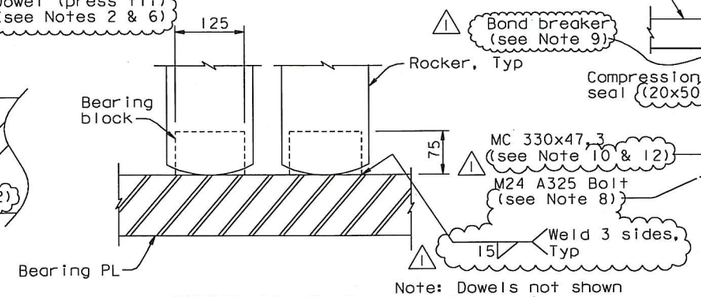

SECTION D-D
1:5

Note: Dowels not shown for clarity.

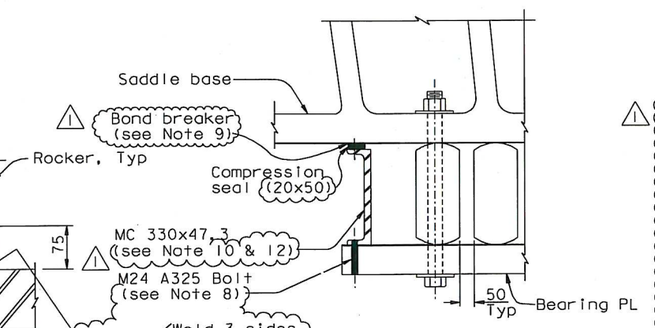

DETAIL C
1:10

NOTES:

1. Rockers shall be ASTM A668 Class J.
2. Dowels shall be ASTM A276 Type 410 condition T. Dowels of 50 Dia shall be press fit into holes of diameter 0.15 mm smaller than the dowel.
3. Each anchor rod shall hand wrench tightened.
4. The saddle and rockers shall be oriented according to the saddle layout. See "East Saddle Details No.1" and "East Saddle Details No.2" sheets.
5. Slotted holes shall be detailed to accommodate all saddle movements during erection, and after completion of the bridge shall accommodate a range of saddle movement of at least 50 mm in each direction. Slotted holes may be placed in the Bearing PL or the saddle base PL.
6. The shape of the dowel shall be a cycloid consistent with the radius of the rocker.
7. For slotted holes in the saddle base plate option the following shall apply: the anchor rods shall be threaded in both ends; two nuts and one washer shall be installed in the bearing plate to clamp the rod in the standard hole; a nominal gap (0.8 mm), a washer and a jam-nut (or other anti-loosening devise) shall be provided at the slotted holes in the saddle base plate.
8. The MC 330 may be welded, subject to approval of the Engineer.
9. PTFE tape (0.5mm thick), shall be applied to the neoprene compression seal.
10. It is acceptable to shift the MC 330 on the tower side 50 mm towards the east anchorage, subject to review and approval by the Engineer.

REGISTERED PROFESSIONAL ENGINEER Marwan N. Nader No. C 054426 Exp. 12/31/11 CIVIL STATE OF CALIFORNIA

FOR REVISIONS ONLY

CONTRACT CHANGE ORDER NO. 87
SHEET 98 OF 115

REQUESTS FOR INFORMATION NOT ADDRESSED IN THIS CCO REMAIN IN FORCE

ALL DIMENSIONS ARE IN MILLIMETERS UNLESS OTHERWISE SHOWN

R. Valizadeh/V. Toan/Y.L./W.L./F.C.
DESIGN OVERSIGHT
Roya Valizadeh / Vonal Toan / Y Liu
SIGN OFF DATE 09/01/11

MARK	DATE	DESCRIPTIONS	BY	CH'D	CCO#
1	09/01/11	EAST END OBG	GB	MN	87

REVISIONS

DESIGN	BY G. Baker	CHECKED J. Kuliki	
DETAILS	BY R. Kanitkar	CHECKED T. McMeans	
QUANTITIES	BY D. Turner	CHECKED D. Harrison	

PREPARED FOR THE STATE OF CALIFORNIA DEPARTMENT OF TRANSPORTATION

R. Manzanarez
PROJECT ENGINEER

BRIDGE NO. 34-0006L/R
KILOMETER POST 13.2/13.9

SAN FRANCISCO OAKLAND BAY BRIDGE
EAST SPAN SEISMIC SAFETY PROJECT
SELF-ANCHORED SUSPENSION BRIDGE
(SUPERSTRUCTURE & TOWER)

EAST SADDLE DETAILS NO. 6

Rev. Date: 5-18-98

ORIGINAL SCALE IN MILLIMETERS FOR REDUCED PLANS 0 10 20 30 40 50 60 70 80 90 100

CU 04
EA 0120F1

DISREGARD PRINTS BEARING EARLIER REVISION DATES

REVISION DATES (PRELIMINARY STAGE ONLY) 05/15/99 08/02/99 05/24/01 04/08/02 07/08/02 12/19/02

SHEET 372R1 OF

FILE => I:\bb\04-0120F1\sas\contract plans and cco\cco\cco#87\1-original 09-01-11\dgn\agsdd12.dgn

100 % PS&E

USERNAME => ALIshansky DATE PLOTTED => 30 AUG 2011 TIME PLOTTED => 13:35:35

DIST.	COUNTY	ROUTE	KILOMETER POST TOTAL PROJECT	SHEET NO.	TOTAL SHEETS
04	SF	80	13.2/13.9	790R1	1204

George Baker
REGISTERED ENGINEER - CIVIL
12-6-04
PLANS APPROVAL DATE

REGISTERED PROFESSIONAL ENGINEER George S. Baker No. C 57112 Exp. 12/31/05 CIVIL STATE OF CALIFORNIA

The State of California or its officers or agents shall not be responsible for the accuracy or completeness of electronic copies of this plan sheet.

T.Y. LIN / MOFFATT & NICHOL
825 BATTERY STREET
SAN FRANCISCO, CA 94111

Caltrans now has a web site! To get to the web site, go to: http://www.dot.ca.gov

9. It is acceptable to extend the saddle rib to the saddle bearing PL in lieu of the bearing PL web extension, subject to review and approval of the Engineer. Where the offset between the saddle rib and the support beam centerlines exceeds 60 mm, the bearing PL shall be thickened to 60 mm.
10. It is acceptable to replace the W530x150 crossbeams at the bearing locations with W310x253 or a built-up shape equivalent to a W310x253, subject to review and and approval of the Engineer. The W310x253 connection to the saddle support beam shall consist of L 203x203x19 and 6-M24 bolts at each faying surface (in lieu of 8-M22). At the Contractor's option, it is acceptable to use A992 Gr 345 or A572 Gr 345 in lieu of A709 Br 345 for W310x253.
11. For Section E-E, see "East Saddle Details No. 7A" sheet.
12. At the Contractor's option, alternate detail using oversize holes may be used. For acceptable alternate details, see "East Saddle Details No. 7B" sheet.
13. At the Contractor's option, longitudinal slotted holes may be provided in the saddle support beam flanges and web to facilitate alignment of the bearing beams with the saddle.

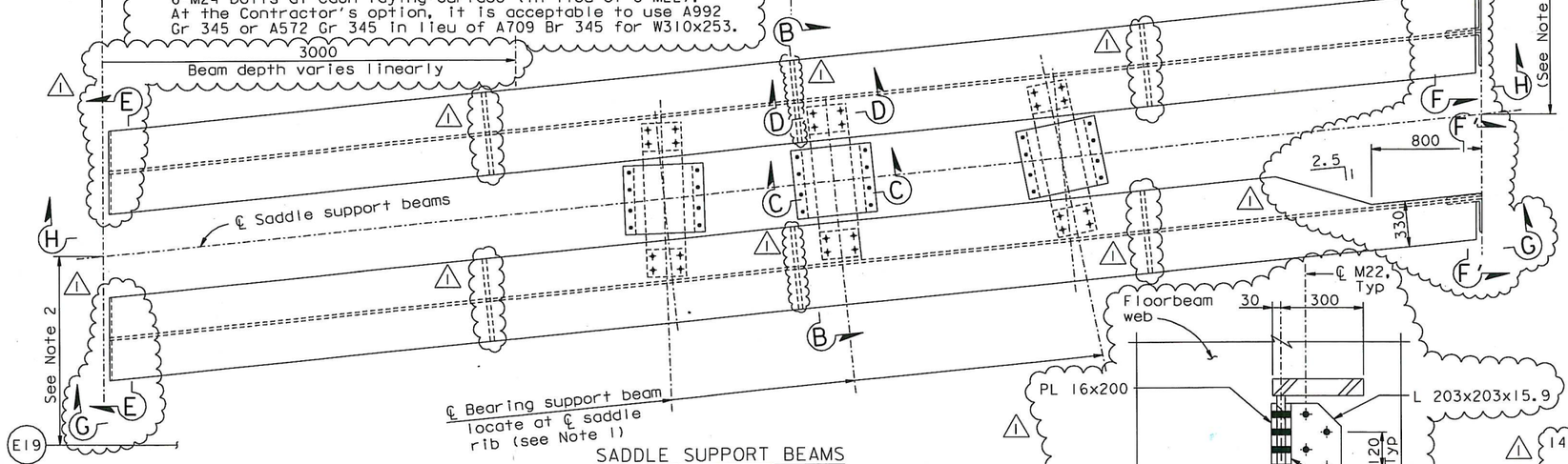

SADDLE SUPPORT BEAMS
PLAN SECTION A-A (See Key Section)
1:20

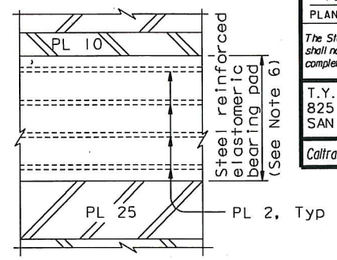

DETAIL E
NTS

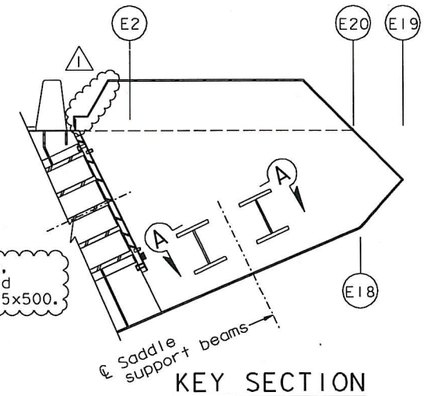

KEY SECTION
NTS

14. At the Contractor's option, elastomeric bearing pad and PL 25 may be reduced to 375x500.

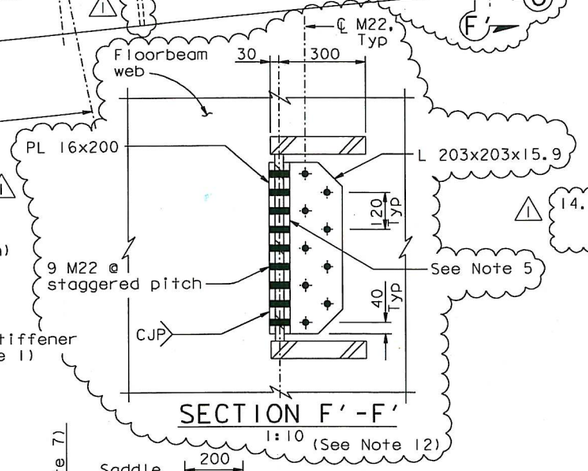

SECTION F'-F'
1:10 (See Note 12)

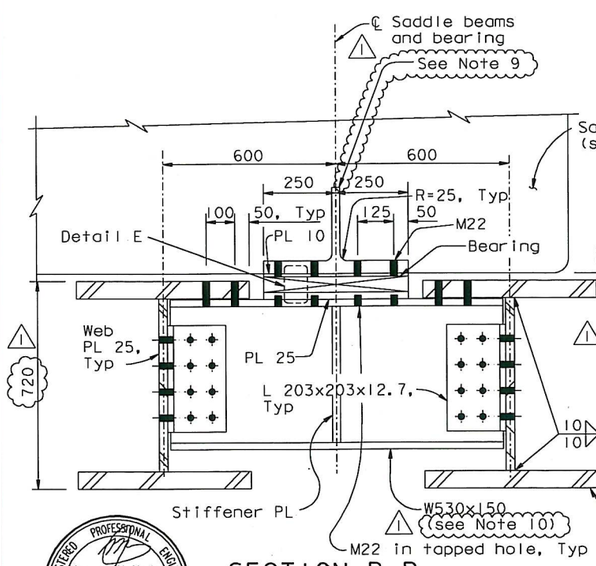

SECTION B-B
1:10

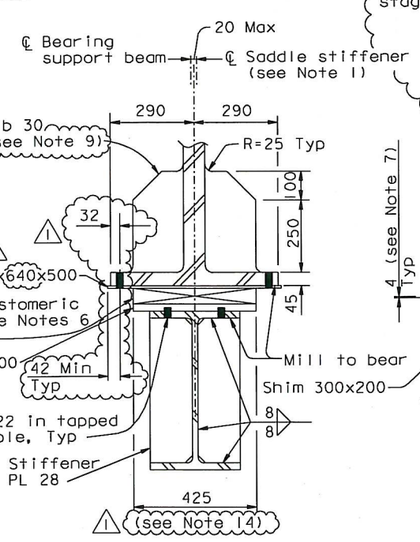

SECTION C-C
1:10

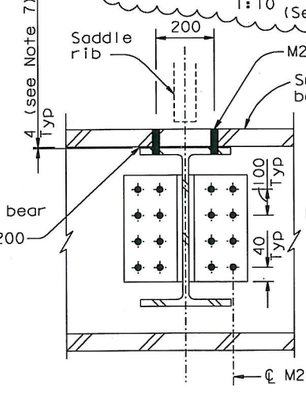

SECTION D-D
1:10 (See Note 13)

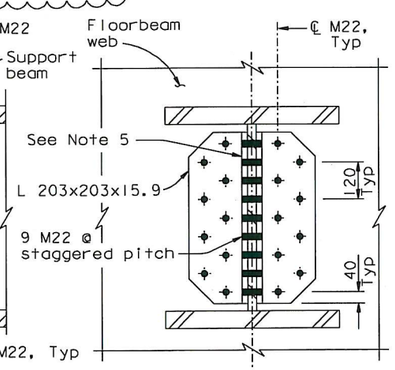

SECTION F-F
1:10 (See Note 12)

NOTES:

1. For saddle geometry and details, see "East Saddle Details No. 1" to "East Saddle Details No. 6" sheets.
2. The saddle support beams shall be aligned with respect to the east saddle and shall be positioned so as to support the saddle during construction. For approximate location of saddle support beam connection to floorbeam, see "Floorbeam At East Transition No. 2" sheet.
3. The Contractor shall provide temporary supports for the saddles and rockers during installation. The temporary supports shall accommodate all saddle movements during construction. During construction the Contractor shall support the saddle against unseating or uplift due to the cable movements.
4. The saddle support beams and elastomeric bearings shall be permanent. The support beams may be used by the Contractor for temporary support, subject to approval by the Engineer.
5. Angles shall be bent to lie flush against floorbeams webs.
6. The elastomeric bearing pad shall be vulcanized to both the PL 10 and the PL 25. It shall be installed without shear deformation.
7. Dimensions shown for information only. Gap shall be set as recommended by the elastomeric bearing pad manufacturer so that each bearing will be installed with a precompressed force of 500 kN.
8. For Section G-G, see "East Saddle Details No. 7A" sheet.

REGISTERED PROFESSIONAL ENGINEER Marwan N. Nader No. C 054426 Exp. 12/31/11 CIVIL STATE OF CALIFORNIA

FOR REVISIONS ONLY

CONTRACT CHANGE ORDER NO. 87
SHEET 99 OF 115

SADDLE SUPPORT BEAM DETAILS

REQUESTS FOR INFORMATION NOT ADDRESSED IN THIS CCO REMAIN IN FORCE

ALL DIMENSIONS ARE IN MILLIMETERS UNLESS OTHERWISE SHOWN

R. Valizadeh/V. Toan/Y.L./W.L./F.C.
DESIGN OVERSIGHT
Roya Valizadeh / Vonal Toan / Y Liu
SIGN OFF DATE 09/01/11

MARK	DATE	DESCRIPTIONS	BY	CH'D	CCO#
1	09/01/11	EAST END OBG	GB	MN	87

REVISIONS

DESIGN	BY G. Baker	CHECKED	J. Kuliki
DETAILS	BY R. Kanitkar	CHECKED	T. McMeans
QUANTITIES	BY D. Turner	CHECKED	D. Harrison

PREPARED FOR THE STATE OF CALIFORNIA DEPARTMENT OF TRANSPORTATION

R. Manzanarez
PROJECT ENGINEER

BRIDGE NO. 34-0006L/R
KILOMETER POST 13.2/13.9

SAN FRANCISCO OAKLAND BAY BRIDGE
EAST SPAN SEISMIC SAFETY PROJECT
SELF-ANCHORED SUSPENSION BRIDGE
(SUPERSTRUCTURE & TOWER)

EAST SADDLE DETAILS NO. 7

Rev. Date: 5-18-98

ORIGINAL SCALE IN MILLIMETERS FOR REDUCED PLANS 0 10 20 30 40 50 60 70 80 90 100

CU 04
EA 0120F1

DISREGARD PRINTS BEARING EARLIER REVISION DATES

REVISION DATES (PRELIMINARY STAGE ONLY) 05/01/99 06/08/99 05/31/01 04/08/02 07/09/02 12/09/02 11/13/05

SHEET 373R1 OF

FILE => I:\bb\04-012001\sas\contract plans and cco\cco\cco#87\1-original 09-01-11\dgn\agsddl3a.dgn

USERNAME => ALishansk DATE PLOTTED => 30 AUG 2011 TIME PLOTTED => 13:37:18

100 % PS&E

DIST.	COUNTY	ROUTE	KILOMETER POST TOTAL PROJECT	SHEET NO.	TOTAL SHEETS
04	SF	80	13.2/13.9	79051	1204

Caltrans Metric

REGISTERED ENGINEER - CIVIL

09-01-11

PLANS APPROVAL DATE

REGISTERED PROFESSIONAL ENGINEER Marwan N. Nader No. C 054426 Exp. 12/31/11 CIVIL STATE OF CALIFORNIA

The State of California or its officers or agents shall not be responsible for the accuracy or completeness of electronic copies of this plan sheet.

T.Y. LIN / MOFFATT & NICHOL
825 BATTERY STREET
SAN FRANCISCO, CA 94111

Caltrans now has a web site! To get to the web site, go to: http://www.dot.ca.gov

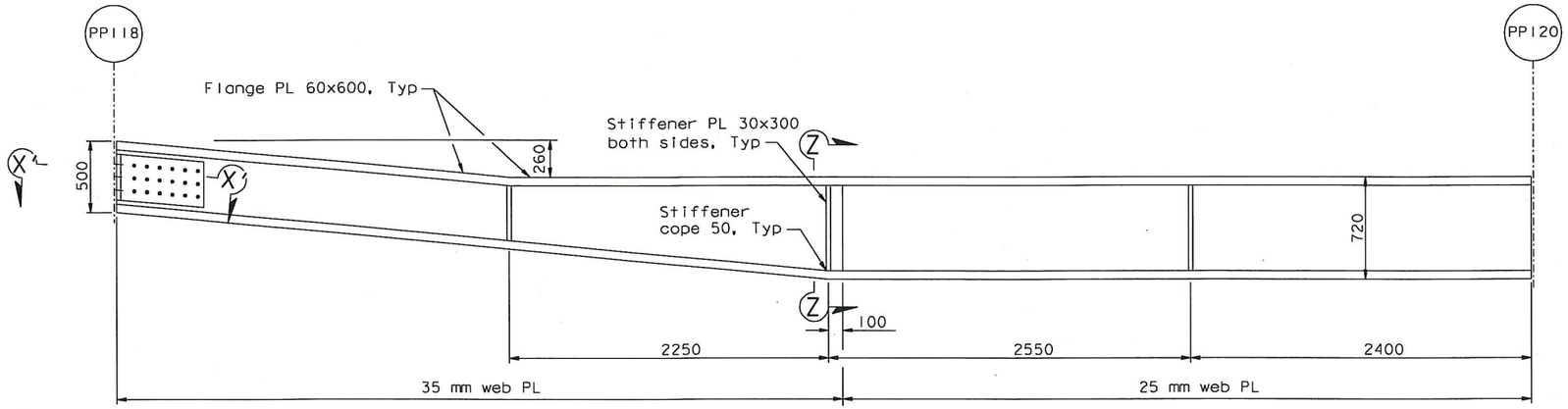

SECTION G-G
1:20

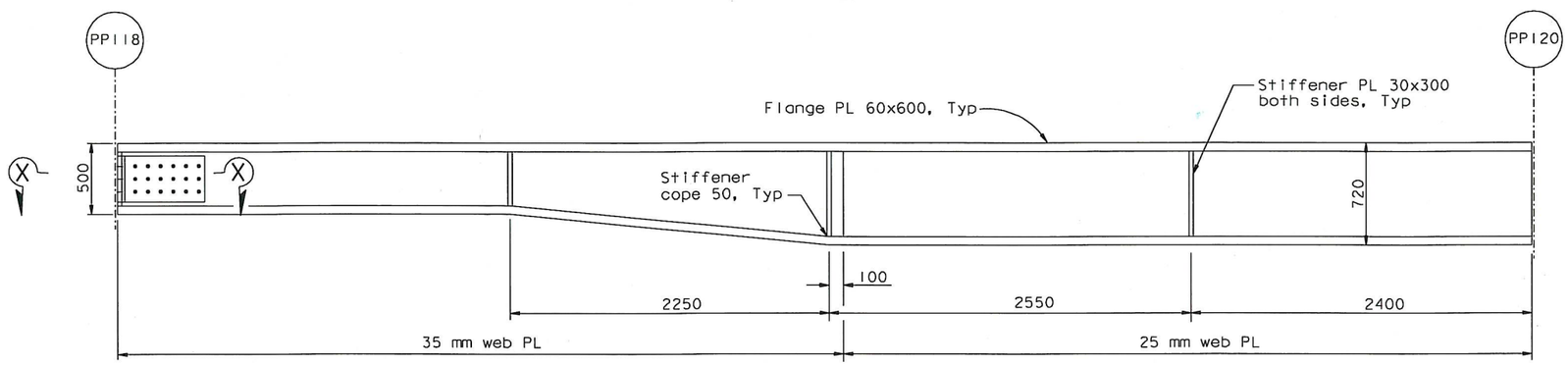

SECTION H-H
1:20

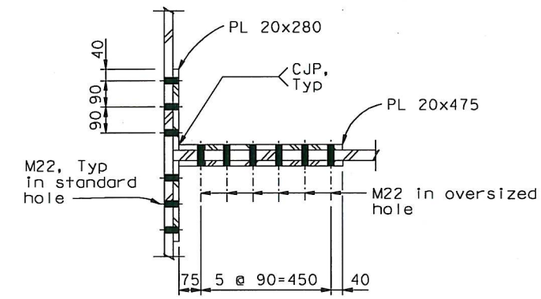

SECTION X-X (X'-X' Similar)
1:10

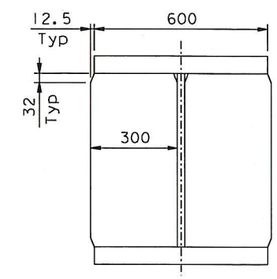

SECTION Z-Z
1:10

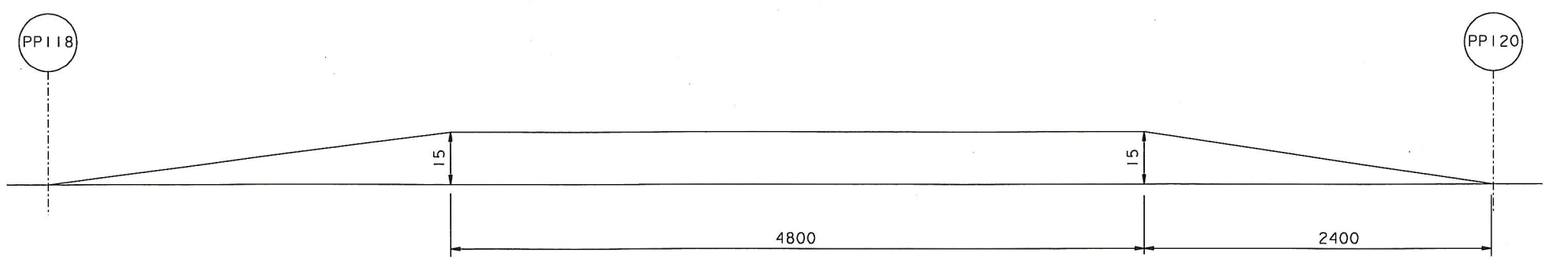

SADDLE SUPPORT BEAM CAMBER DIAGRAM
NTS

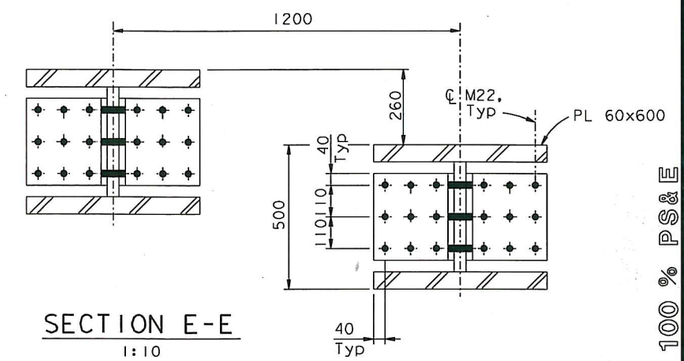

SECTION E-E
1:10

CONTRACT CHANGE ORDER NO. 87
SHEET 100 OF 115

REQUESTS FOR INFORMATION NOT ADDRESSED IN THIS CCO REMAIN IN FORCE

ALL DIMENSIONS ARE IN MILLIMETERS UNLESS OTHERWISE SHOWN

R. Vallizadeh/V. Toan/Y.L./W.L./F.C.
DESIGN OVERSIGHT
SIGN OFF DATE 09/01/11

MARK	DATE	DESCRIPTIONS	BY	CH'D	CCO#
0	09/01/11	EAST END OBG	GB	MN	87

REVISIONS

DESIGN	BY D. Turner	CHECKED G. Baker	
DETAILS	BY D. Turner	CHECKED G. Baker	
QUANTITIES	BY D. Turner	CHECKED G. Baker	

PREPARED FOR THE STATE OF CALIFORNIA DEPARTMENT OF TRANSPORTATION

R. Manzanarez
PROJECT ENGINEER

BRIDGE NO. 34-0006L/R
KILOMETER POST 13.2/13.9

SAN FRANCISCO OAKLAND BAY BRIDGE
EAST SPAN SEISMIC SAFETY PROJECT
SELF-ANCHORED SUSPENSION BRIDGE
(SUPERSTRUCTURE & TOWER)

EAST SADDLE DETAILS NO. 7A

Rev. Date: 5-18-98

ORIGINAL SCALE IN MILLIMETERS FOR REDUCED PLANS 0 10 20 30 40 50 60 70 80 90 100

CU 04
EA 0120F1

DISREGARD PRINTS BEARING EARLIER REVISION DATES → 09/01/11

REVISION DATES (PRELIMINARY STAGE ONLY)

SHEET 373S1 OF

FILE => I:\bb\04-0120F1\sas\contract plans and cco\cco\cco#87\1-original 09-01-11\dgn\agsdd13b.dgn

100 % PS&E

USERNAME => ALIshonsk DATE PLOTTED => 30 AUG 2011 TIME PLOTTED => 13:39:33

DIST.	COUNTY	ROUTE	KILOMETER POST TOTAL PROJECT	SHEET NO.	TOTAL SHEETS
04	SF	80	13.2/13.9	790S2	1204

REGISTERED ENGINEER - CIVIL

09-01-11

PLANS APPROVAL DATE

REGISTERED PROFESSIONAL ENGINEER Marwan N. Nader No. C 054426 Exp. 12/31/11 CIVIL STATE OF CALIFORNIA

The State of California or its officers or agents shall not be responsible for the accuracy or completeness of electronic copies of this plan sheet.

T.Y. LIN / MOFFATT & NICHOL
825 BATTERY STREET
SAN FRANCISCO, CA 94111

Caltrans now has a web site! To get to the web site, go to: http://www.dot.ca.gov

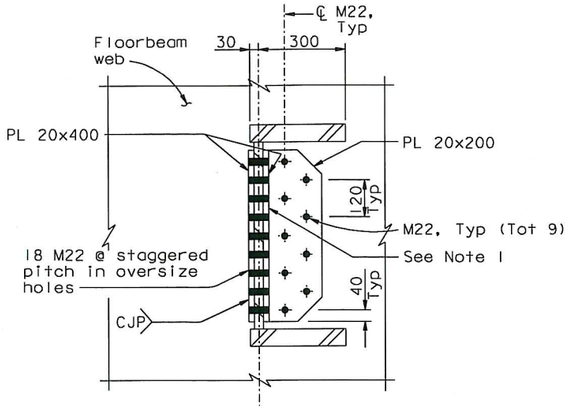

ALTERNATE SECTION F'-F'
1:10

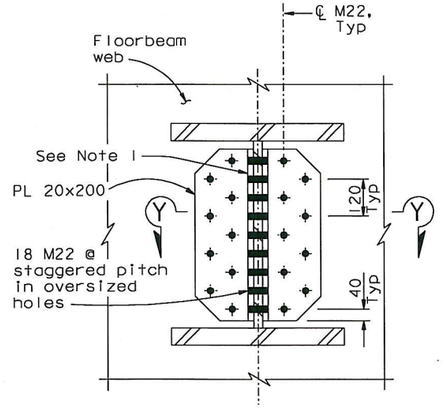

ALTERNATE SECTION F-F
1:10

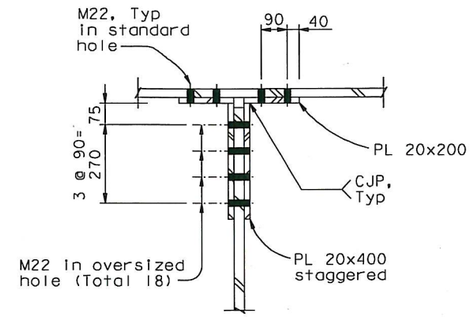

SECTION Y-Y
1:10

NOTES:

1. Plate shall lie flush against floorbeam webs.

CONTRACT CHANGE ORDER NO. 87
SHEET 101 OF 115

REQUESTS FOR INFORMATION NOT ADDRESSED IN THIS CCO REMAIN IN FORCE

ALL DIMENSIONS ARE IN MILLIMETERS UNLESS OTHERWISE SHOWN

MARK	DATE	DESCRIPTIONS	BY	CH'D	CCO#
0	09/01/11	EAST END OBG	GB	MN	87

REVISIONS

R. Vallzadeh/V. Toan/Y.L./W.L./F.C.
DESIGN OVERSIGHT
Roya Vallzadeh / Vorat Toan / Y Liu
SIGN OFF DATE 09/01/11

	BY	CHECKED
DESIGN	D. Turner	G. Baker
DETAILS	D. Turner	G. Baker
QUANTITIES	D. Turner	G. Baker

PREPARED FOR THE STATE OF CALIFORNIA DEPARTMENT OF TRANSPORTATION

R. Manzanarez
PROJECT ENGINEER

BRIDGE NO. 34-0006L/R
KILOMETER POST 13.2/13.9

SAN FRANCISCO OAKLAND BAY BRIDGE
EAST SPAN SEISMIC SAFETY PROJECT
SELF-ANCHORED SUSPENSION BRIDGE
(SUPERSTRUCTURE & TOWER)

EAST SADDLE DETAILS NO. 7B

Rev. Date: 5-18-98

ORIGINAL SCALE IN MILLIMETERS FOR REDUCED PLANS 0 10 20 30 40 50 60 70 80 90 100

CU 04
EA 0120F1

DISREGARD PRINTS BEARING EARLIER REVISION DATES 09/01/11

REVISION DATES (PRELIMINARY STAGE ONLY)

SHEET 373S2 OF

FILE => I:\bb\04-012001\sas\contract plans and cco\cco\cco#87\1-original 09-01-11\dgn\agsdd13c.dgn

100 % PS&E

USERNAME => ALishansk DATE PLOTTED => 30 AUG 2011 TIME PLOTTED => 13:42:47

DIST.	COUNTY	ROUTE	KILOMETER POST TOTAL PROJECT	SHEET NO.	TOTAL SHEETS
04	SF	80	13.2/13.9	805R1	1204

Caltrans Metric

George Baker
REGISTERED ENGINEER - CIVIL
12-6-04
PLANS APPROVAL DATE

REGISTERED PROFESSIONAL ENGINEER George S. Baker No. C57112 Exp. 12/31/05 CIVIL STATE OF CALIFORNIA

The State of California or its officers or agents shall not be responsible for the accuracy or completeness of electronic copies of this plan sheet.

T.Y. LIN / MOFFATT & NICHOL
825 BATTERY STREET
SAN FRANCISCO, CA 94111

Caltrans now has a web site! To get to the web site, go to: http://www.dot.ca.gov

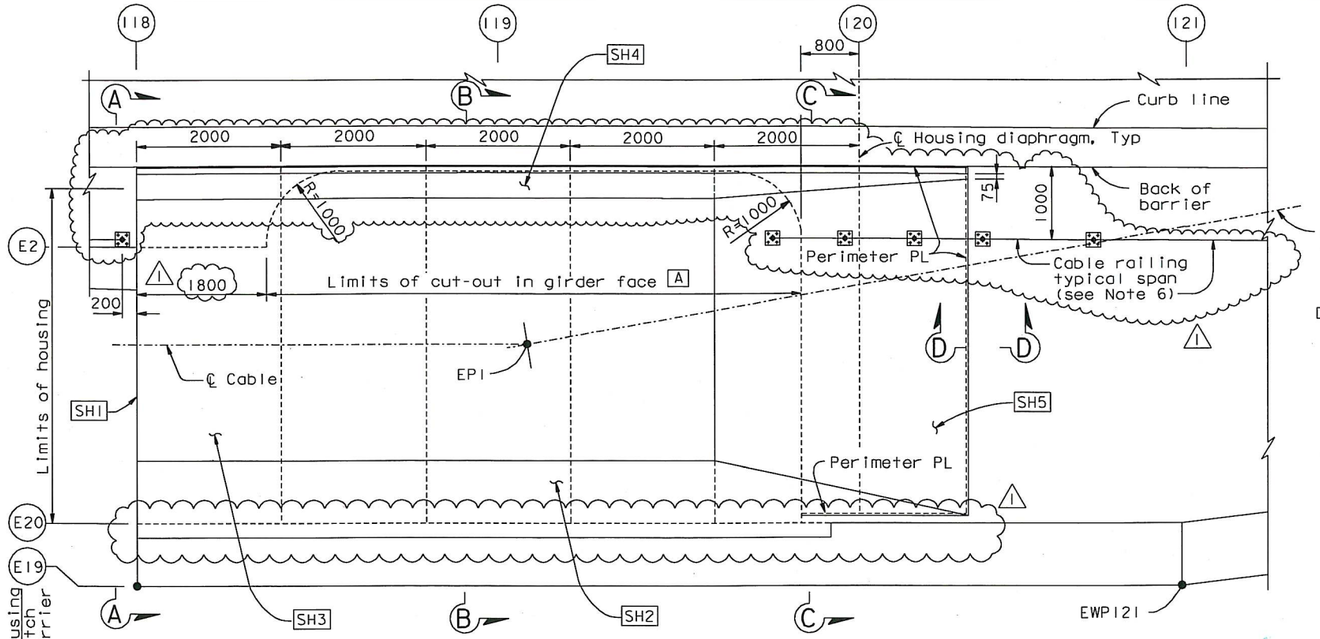

PLAN (See Note 2)

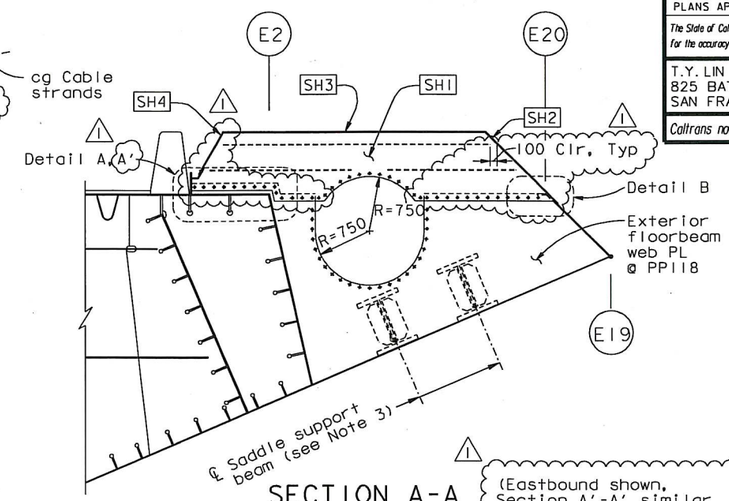

SECTION A-A
1:40

(Eastbound shown, Section A'-A' similar and opposite hand)

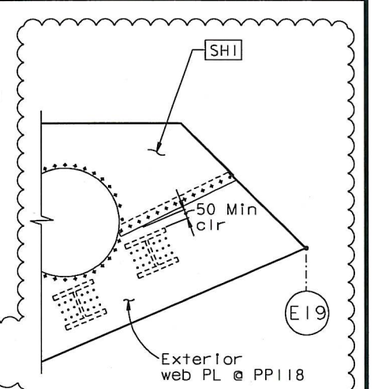

ALTERNATIVE SECTION A-A (See Note 7)
1:40

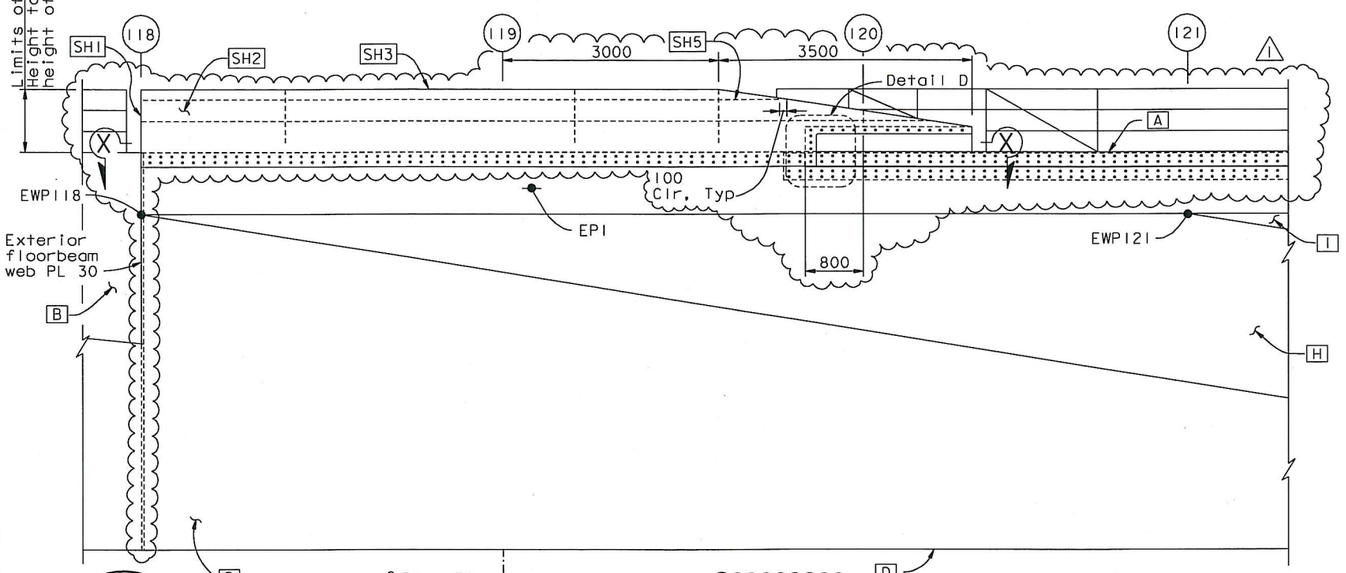

ELEVATION
EAST SADDLE HOUSING
1:40

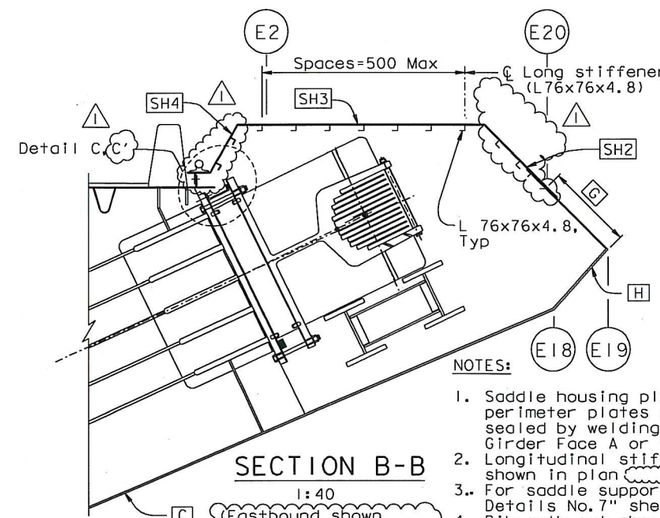

SECTION B-B
1:40

(Eastbound shown, Section B'-B' similar and opposite hand)

LEGEND:

SH5 Saddle housing PL 5

C Girder Face C

NOTES:

1. Saddle housing plates SH1 through SH5 and all perimeter plates shall be 10 mm thick and shall be sealed by welding against any entry of water from Girder Face A or from above.
2. Longitudinal stiffeners in saddle housing are not shown in plan for clarity.
3. For saddle support beam details, see "East Saddle Details No.7" sheet.
4. Bikepath not shown. For bikepath details, see "Bikepath Details" sheets.
5. For Sections C-C, D-D and Details A,B and C, see "East Saddle Housing Details No.2" sheet.
6. For B11-47 cable railing details see "Standard Plans".
7. At the Contractor's option, it is acceptable to use "Alternative Section A-A" in lieu of Section A-A".
8. For Detail D and Section X-X, see "East Saddle Housing Details No.1A" sheet.
9. For architectural splice details, see "Girder At East Transition Details No.3" sheet.
10. For Details A' and C', see "East Saddle Housing Details No.2" sheet.

ALL DIMENSIONS ARE IN MILLIMETERS UNLESS OTHERWISE SHOWN

REGISTERED PROFESSIONAL ENGINEER Marwan N. Nader No. C 054426 Exp. 12/31/11 CIVIL STATE OF CALIFORNIA

FOR REVISIONS ONLY

CONTRACT CHANGE ORDER NO. 87
SHEET 102 OF 115

REQUESTS FOR INFORMATION NOT ADDRESSED IN THIS CCO REMAIN IN FORCE

MARK	DATE	DESCRIPTIONS	BY	CH'D	CCO#
1	09/01/11	EAST END OBG	GB	MN	87

REVISIONS

R. Vallzadeh/V. Toan/Y.L./W.L./F.C.
DESIGN OVERSIGHT
Roya Valizadeh / Vong Toan / Y Liu
SIGN OFF DATE 09/01/11

	BY	CHECKED
DESIGN	G. Baker	T. McMeans
DETAILS	C. Mauch	T. McMeans
QUANTITIES	C. Mauch	D. Harrison

PREPARED FOR THE STATE OF CALIFORNIA DEPARTMENT OF TRANSPORTATION

R. Manzanarez
PROJECT ENGINEER

BRIDGE NO. 34-0006L/R
KILOMETER POST 13.2/13.9

SAN FRANCISCO OAKLAND BAY BRIDGE
EAST SPAN SEISMIC SAFETY PROJECT
SELF-ANCHORED SUSPENSION BRIDGE
(SUPERSTRUCTURE & TOWER)

EAST SADDLE HOUSING DETAILS NO. 1

Rev. Date: 5-18-98

ORIGINAL SCALE IN MILLIMETERS FOR REDUCED PLANS 0 10 20 30 40 50 60 70 80 90 100

CU 04
EA 0120F1

DISREGARD PRINTS BEARING EARLIER REVISION DATES

REVISION DATES (PRELIMINARY STAGE ONLY): 5/15/99 08/20/99 05/31/01 01/08/02 07/01/02 12/19/02

SHEET 388R1 OF

FILE => I:\bb\04-012001\sas\contract plans and cco\cco\cco#87\1-original 09-01-11\dgn\agshd05.dgn

USERNAME => ALishansky DATE PLOTTED => 30 AUG 2011 TIME PLOTTED => 13:44:24

100% PS&E

DIST.	COUNTY	ROUTE	KILOMETER POST TOTAL PROJECT	SHEET NO.	TOTAL SHEETS
04	SF	80	13.2/13.9	805S1	1204

REGISTERED ENGINEER - CIVIL

09-01-11

PLANS APPROVAL DATE

REGISTERED PROFESSIONAL ENGINEER Marwan N. Nader No. C 054426 Exp. 12/31/11 CIVIL STATE OF CALIFORNIA

The State of California or its officers or agents shall not be responsible for the accuracy or completeness of electronic copies of this plan sheet.

T.Y. LIN / MOFFATT & NICHOL
825 BATTERY STREET
SAN FRANCISCO, CA 94111

Caltrans now has a web site! To get to the web site, go to: http://www.dot.ca.gov

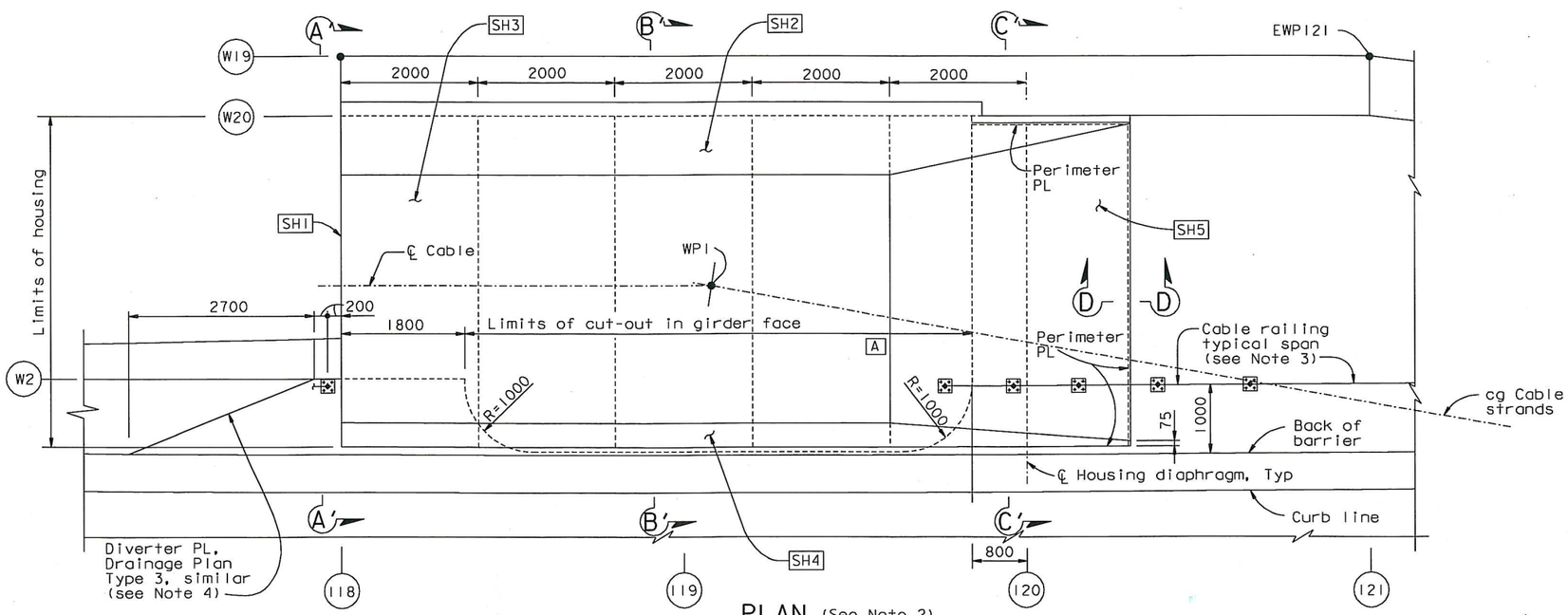

PLAN (See Note 2)

EAST SADDLE HOUSING (Westbound)

1:40

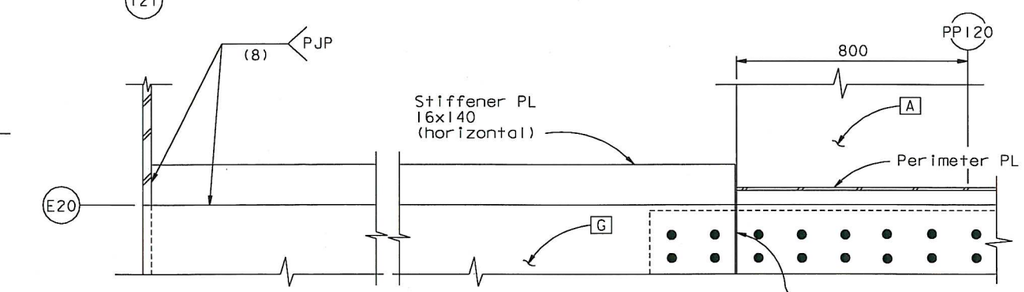

SECTION X-X (Saddle housing not shown)

1:10

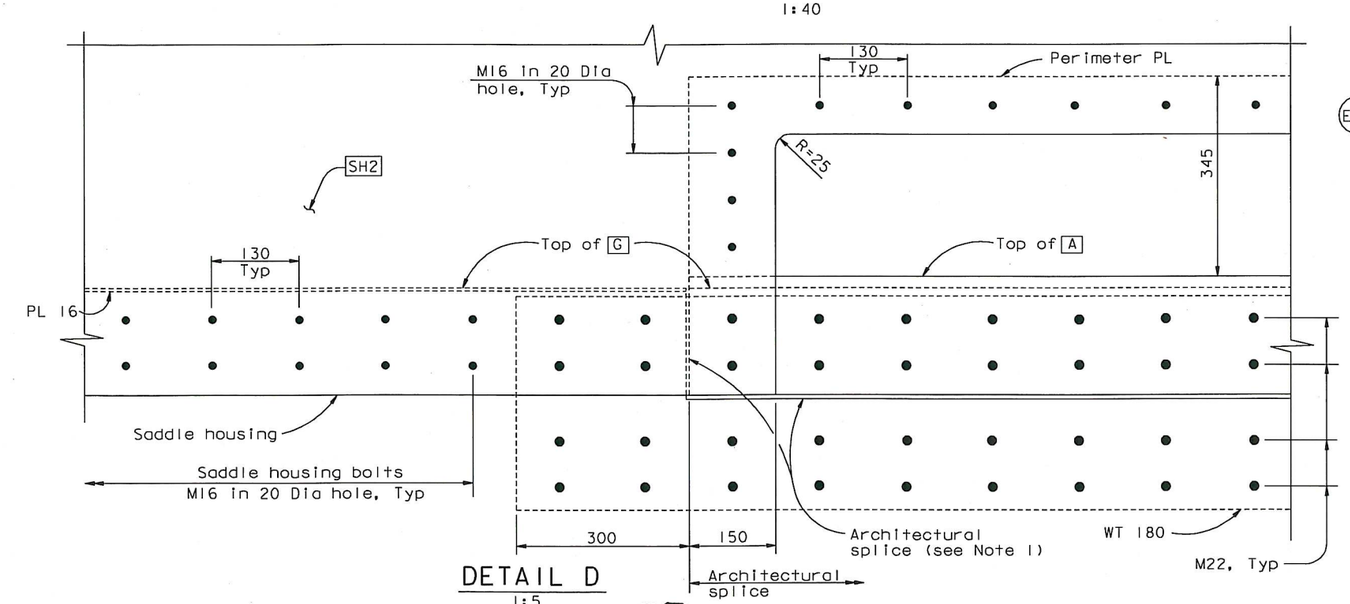

DETAIL D

1:5

NOTES:

1. For other architectural splice details, see "Girder at East Transition Details No.3" sheet.
2. Longitudinal stiffeners in saddle housing are not shown in plan for clarity.
3. For B11-47 cable railing details, see "Standard Plans".
4. For diverter PL details, see "Deck Drainage Details No.1" sheet.
5. For Sections A'-A' and B'-B', see "East Saddle Housing Details No.1" sheet.
6. For Section C'-C', see "East Saddle Housing Details No.3" sheet.
7. For Section D-D, see "East Saddle Housing Details No.2" sheet.

CONTRACT CHANGE ORDER NO. 87
SHEET 103 OF 115

REQUESTS FOR INFORMATION NOT ADDRESSED IN THIS CCO REMAIN IN FORCE

ALL DIMENSIONS ARE IN MILLIMETERS UNLESS OTHERWISE SHOWN

100 % PS&E

R. Vallizadeh/V. Toan/Y.L./W.L./F.C.
DESIGN OVERSIGHT
Roya Vallizadeh / Vonal Toan / Y Liu
SIGN OFF DATE 09/01/11

MARK	DATE	DESCRIPTIONS	BY	CH'D	CCO#
0	09/01/11	EAST END OBG	GB	MN	87

REVISIONS

DESIGN	BY D. Turner	CHECKED G. Baker	
DETAILS	BY D. Turner	CHECKED G. Baker	
QUANTITIES	BY D. Turner	CHECKED G. Baker	

PREPARED FOR THE STATE OF CALIFORNIA DEPARTMENT OF TRANSPORTATION

R. Manzanarez
PROJECT ENGINEER

BRIDGE NO. 34-0006L/R
KILOMETER POST 13.2/13.9

SAN FRANCISCO OAKLAND BAY BRIDGE
EAST SPAN SEISMIC SAFETY PROJECT
SELF-ANCHORED SUSPENSION BRIDGE
(SUPERSTRUCTURE & TOWER)

EAST SADDLE HOUSING DETAILS NO. 1A

Rev. Date: 5-18-98

ORIGINAL SCALE IN MILLIMETERS FOR REDUCED PLANS 0 10 20 30 40 50 60 70 80 90 100

CU 04
EA 0120F1

DISREGARD PRINTS BEARING EARLIER REVISION DATES 09/01/11

REVISION DATES (PRELIMINARY STAGE ONLY)

SHEET 388S1 OF

FILE => I:\bb\04-01200I\sas\contract plans and cco\cco\cco#87\1-original 09-01-11\dgn\agshd05a.dgn

USERNAME => ALishonsk; DATE PLOTTED => 30 AUG 2011 TIME PLOTTED => 14:00:00

DIST.	COUNTY	ROUTE	KILOMETER POST TOTAL PROJECT	SHEET NO.	TOTAL SHEETS
04	SF	80	13.2/13.9	806R1	1204

Caltrans Metric

George Baker
REGISTERED ENGINEER - CIVIL
12-6-04
PLANS APPROVAL DATE

REGISTERED PROFESSIONAL ENGINEER George S. Baker No. C57112 Exp. 12/31/05 CIVIL STATE OF CALIFORNIA

The State of California or its officers or agents shall not be responsible for the accuracy or completeness of electronic copies of this plan sheet.

T.Y. LIN / MOFFATT & NICHOL
825 BATTERY STREET
SAN FRANCISCO, CA 94111

Caltrans now has a web site! To get to the web site, go to: http://www.dot.ca.gov

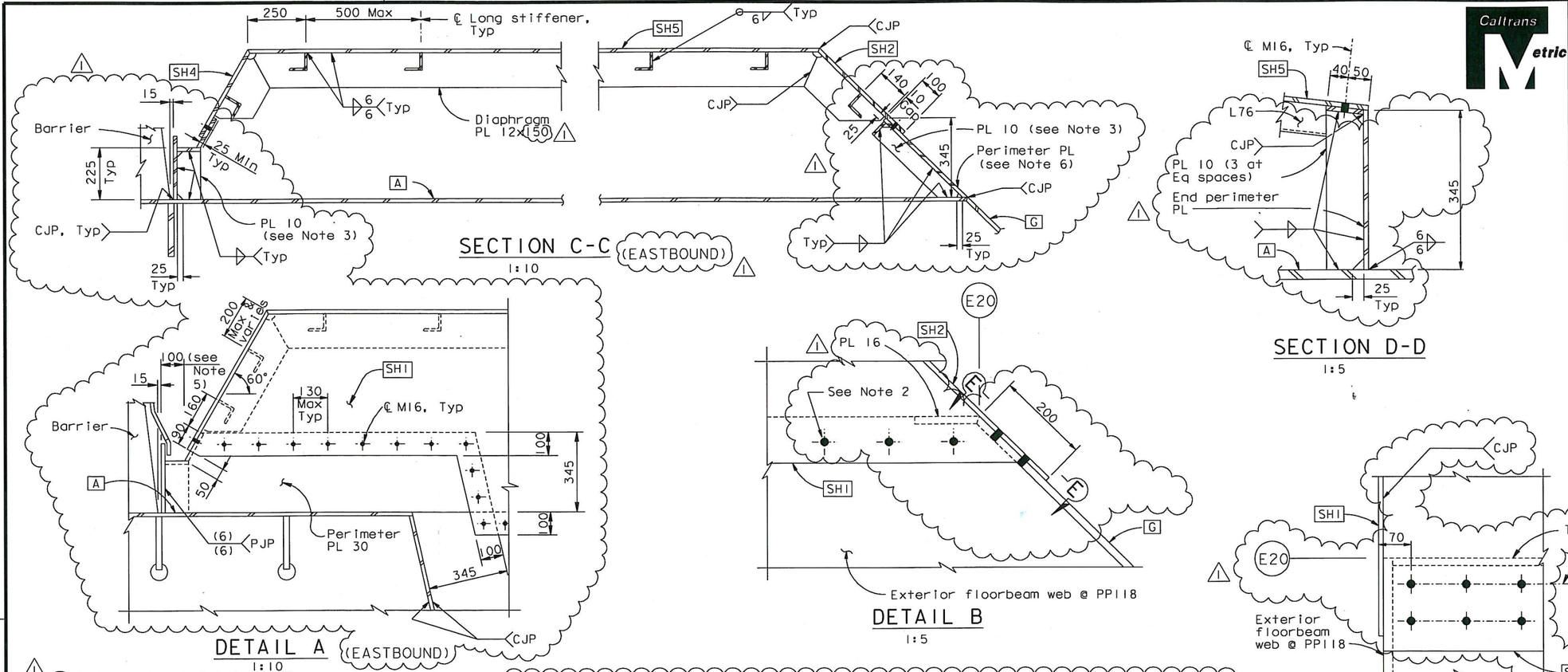

NOTES:

1. All horizontal dimensions are taken parallel to Girder face A.
2. At the Contractor's option, oversized holes may be used for M16 bolts in housing and web PL.
3. Spacing of PL 10 to match spacing of PL 12 diaphragm.
4. For other barrier details not shown, see "Barrier Details" sheets.
5. The housing perimeter PL is fabricated straight. Dimension is 100 from PP118 to PP119 and thereafter varies.
6. At the segment splice, upstation from PP120, the saddle housing perimeter PL shall be cut to fit the deck contour. The top edge of the perimeter PL shall be straight and level with respect to the saddle housing.

REGISTERED PROFESSIONAL ENGINEER Marwan N. Nader No. C 054426 Exp. 12/31/11 CIVIL STATE OF CALIFORNIA

FOR REVISIONS ONLY

CONTRACT CHANGE ORDER NO. 87
SHEET 104 OF 115

REQUESTS FOR INFORMATION NOT ADDRESSED IN THIS CCO REMAIN IN FORCE

ALL DIMENSIONS ARE IN MILLIMETERS UNLESS OTHERWISE SHOWN

MARK	DATE	DESCRIPTIONS	BY	CH'D	CCO#
1	09/01/11	EAST END OBG	GB	MN	87

REVISIONS

R. Vallizadeh/V. Toan/Y.L./W.L./F.C.
DESIGN OVERSIGHT
SIGN OFF DATE 09/01/11

DESIGN	BY G. Baker	CHECKED	T. McMeans
DETAILS	BY C. Mauch	CHECKED	T. McMeans
QUANTITIES	BY C. Mauch	CHECKED	D. Harrison

PREPARED FOR THE STATE OF CALIFORNIA DEPARTMENT OF TRANSPORTATION

R. Manzanarez
PROJECT ENGINEER

BRIDGE NO. 34-0006L/R
KILOMETER POST 13.2/13.9

SAN FRANCISCO OAKLAND BAY BRIDGE
EAST SPAN SEISMIC SAFETY PROJECT
SELF-ANCHORED SUSPENSION BRIDGE
(SUPERSTRUCTURE & TOWER)

EAST SADDLE HOUSING DETAILS NO. 2

Rev. Date: 5-18-98

ORIGINAL SCALE IN MILLIMETERS FOR REDUCED PLANS 0 10 20 30 40 50 60 70 80 90 100

CU 04
EA 0120F1

DISREGARD PRINTS BEARING EARLIER REVISION DATES

REVISION DATES (PRELIMINARY STAGE ONLY) 05/15/99 08/26/99 05/31/01 01/08/02 07/01/02 12/19/02

SHEET 389R1 OF

FILE => I:\bb\04-012001\sas\contract plans and cco\cco\cco#87\1-original 09-01-11\dgn\agshd06.dgn

USERNAME => ALishansk DATE PLOTTED => 30 AUG 2011 TIME PLOTTED => 14:02:58

100 % PS&E

DIST.	COUNTY	ROUTE	KILOMETER POST TOTAL PROJECT	SHEET NO.	TOTAL SHEETS
04	SF	80	13.2/13.9	806S1	1204

REGISTERED ENGINEER - CIVIL

09-01-11

PLANS APPROVAL DATE

REGISTERED PROFESSIONAL ENGINEER Marwan N. Nader No. C 054426 Exp. 12/31/11 CIVIL STATE OF CALIFORNIA

The State of California or its officers or agents shall not be responsible for the accuracy or completeness of electronic copies of this plan sheet.

T.Y. LIN / MOFFATT & NICHOL
825 BATTERY STREET
SAN FRANCISCO, CA 94111

Caltrans now has a web site! To get to the web site, go to: http://www.dot.ca.gov

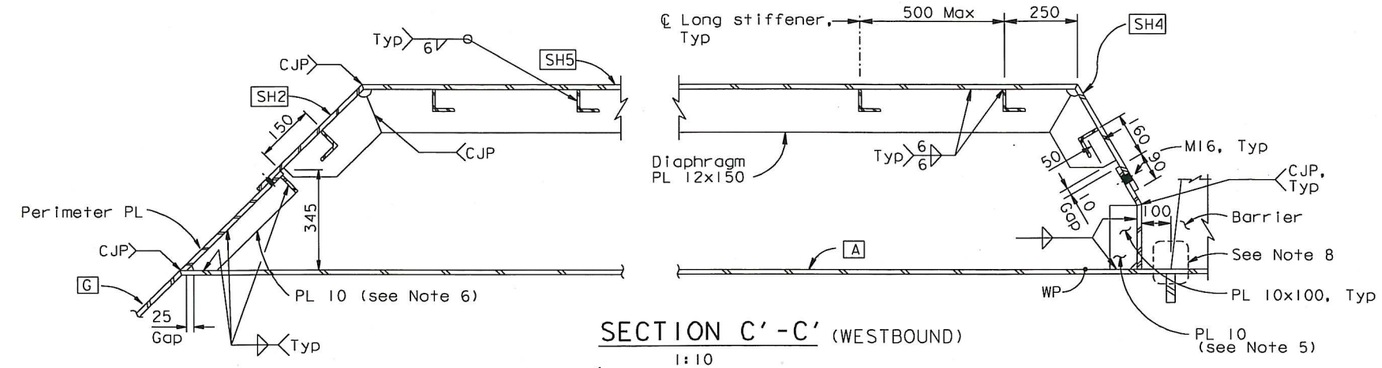

SECTION C'-C' (WESTBOUND)
1:10

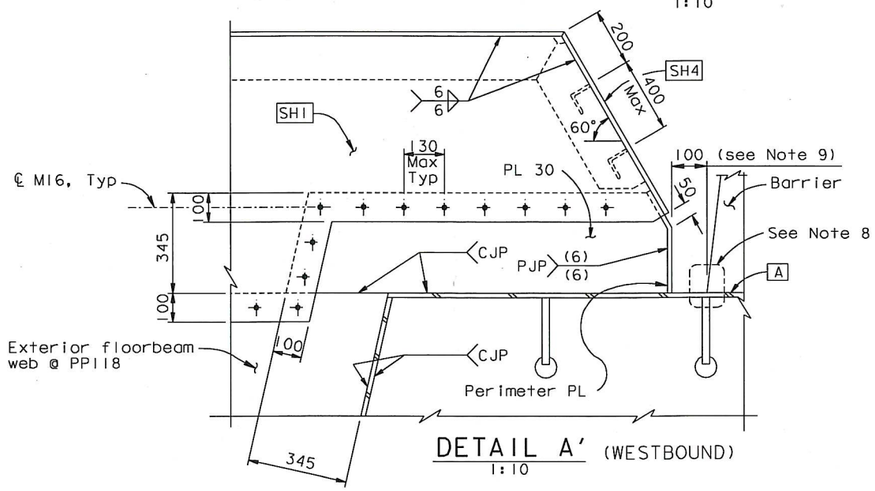

DETAIL A' (WESTBOUND)
1:10

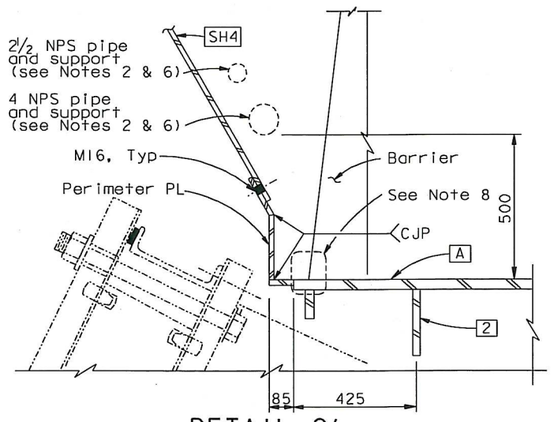

DETAIL C' (WESTBOUND)
1:10

CONTRACT CHANGE ORDER NO. 87
SHEET 105 OF 115

REQUESTS FOR INFORMATION NOT ADDRESSED IN THIS CCO REMAIN IN FORCE

NOTES:

1. All horizontal dimensions are taken parallel to girder Face A.
2. For pipe and pipe support locations and pipe support details, see "Road Plans".
3. At the Contractor's option, long slotted holes in the horizontal direction may be used in the perimeter PL only, subject to review and approval of the Engineer.
4. At the Contractor's option, oversized holes may be used in housing and web PL at PP118 only, subject to review and approval of the Engineer.
5. Spacing of PL 10 to match spacing of PL 12 diaphragm.
6. 4 NPS supports shall be offset from 2½ NPS supports downstation by 900 mm.
7. For barrier details, see "Barrier Details" sheet.
8. For barrier diverter PL details, see "Deck Drainage Details No.2" sheet.
9. The housing perimeter PL is fabricated straight. Dimension is 100 from PP118 to PP119 and thereafter varies.

100 % PS&E

ALL DIMENSIONS ARE IN MILLIMETERS UNLESS OTHERWISE SHOWN

R. Valizadeh/V. Toan/Y.L./W.L./F.C.
DESIGN OVERSIGHT
Ryan Valizadeh / Vonn Toan / Y Liu
SIGN OFF DATE 09/01/11

MARK	DATE	DESCRIPTIONS	BY	CH'D	CCO#
0	09/01/11	EAST END OBG	GB	MN	87

REVISIONS

	BY	CHECKED
DESIGN	D. Turner	G. Baker
DETAILS	D. Turner	G. Baker
QUANTITIES	D. Turner	G. Baker

PREPARED FOR THE STATE OF CALIFORNIA DEPARTMENT OF TRANSPORTATION

R. Manzanarez
PROJECT ENGINEER

BRIDGE NO. 34-0006L/R
KILOMETER POST 13.2/13.9

SAN FRANCISCO OAKLAND BAY BRIDGE
EAST SPAN SEISMIC SAFETY PROJECT
SELF-ANCHORED SUSPENSION BRIDGE
(SUPERSTRUCTURE & TOWER)

EAST SADDLE HOUSING DETAILS NO. 3

Rev. Date: 5-18-98

ORIGINAL SCALE IN MILLIMETERS FOR REDUCED PLANS 0 10 20 30 40 50 60 70 80 90 100

CU 04
EA 0120F1

DISREGARD PRINTS BEARING EARLIER REVISION DATES 09/01/11

REVISION DATES (PRELIMINARY STAGE ONLY)

SHEET 389S OF

FILE => I:\bb\04-012001\sas\contract plans and cco\cco\cco#87\1-original 09-01-11\dgn\agshd06a.dgn

USERNAME => ALIshansky DATE PLOTTED => 30 AUG 2011 TIME PLOTTED => 14:06:36

DIST.	COUNTY	ROUTE	KILOMETER POST TOTAL PROJECT	SHEET NO.	TOTAL SHEETS
04	SF	80	13.2/13.9	811R1	1204

George Baker
REGISTERED ENGINEER - CIVIL
12-6-04
PLANS APPROVAL DATE

REGISTERED PROFESSIONAL ENGINEER George S. Baker No. C 57112 Exp. 12/31/05 CIVIL STATE OF CALIFORNIA

The State of California or its officers or agents shall not be responsible for the accuracy or completeness of electronic copies of this plan sheet.

T.Y. LIN / MOFFATT & NICHOL
825 BATTERY STREET
SAN FRANCISCO, CA 94111

Caltrans now has a web site! To get to the web site, go to: http://www.dot.ca.gov

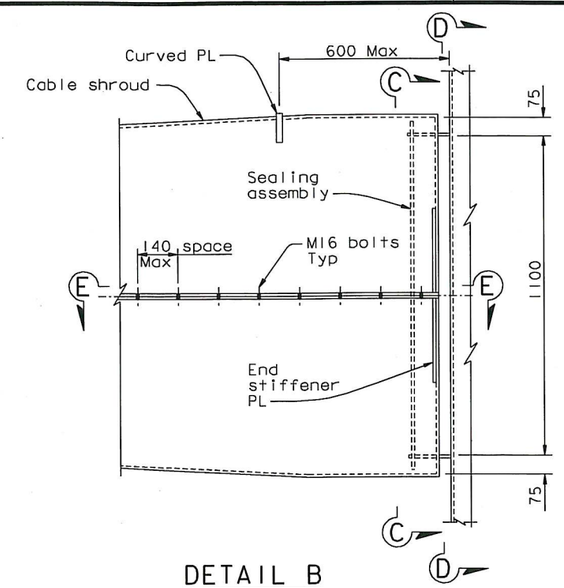

DETAIL B
1:10

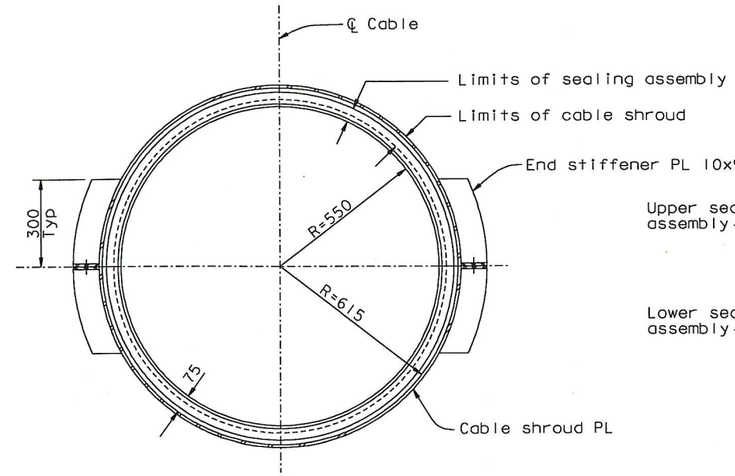

SECTION C-C
1:10

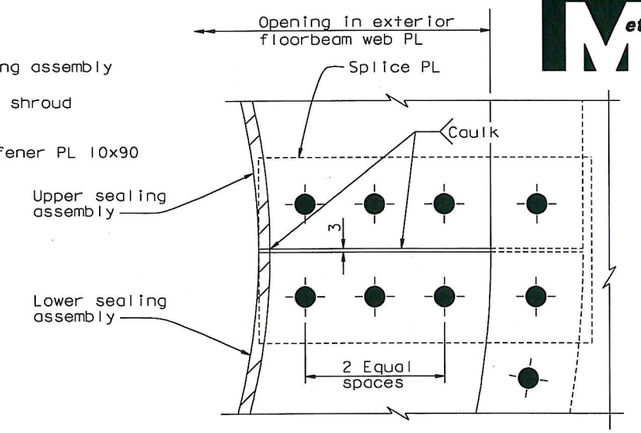

DETAIL D
1:2.5

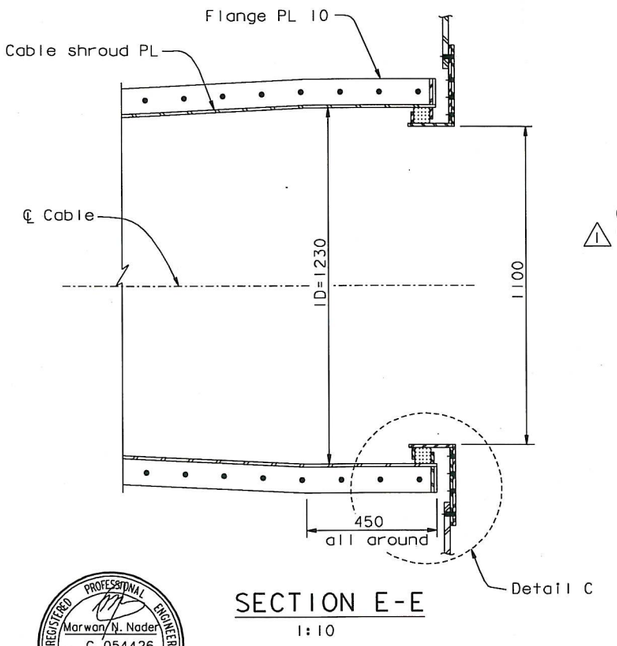

SECTION E-E
1:10

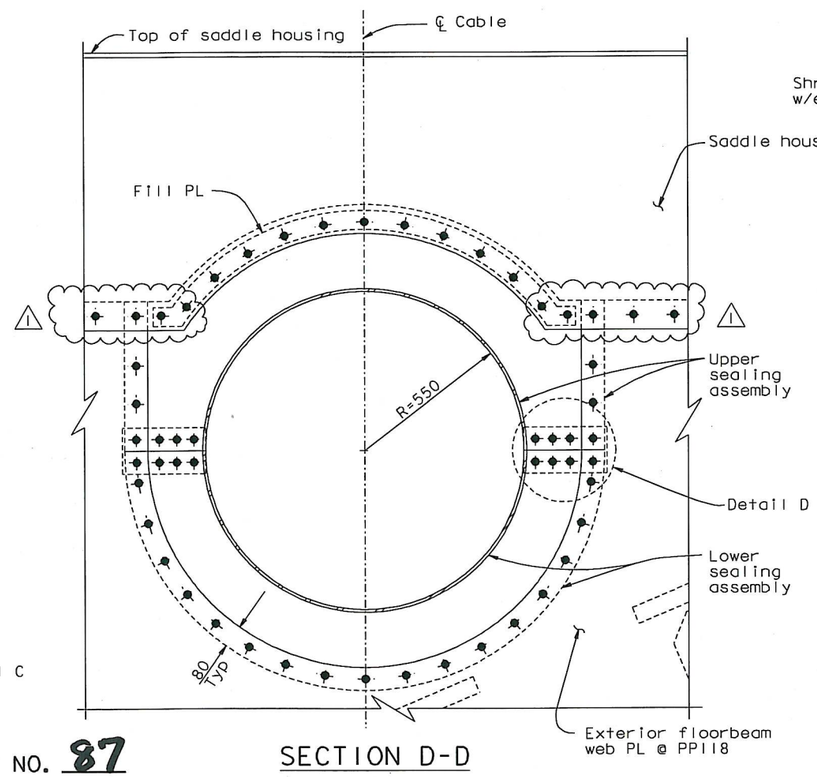

SECTION D-D
1:10

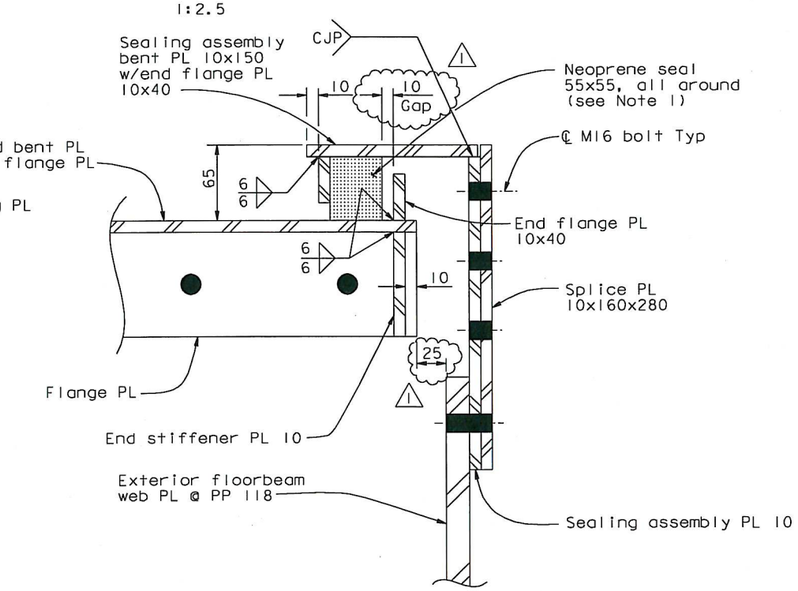

DETAIL C
1:2.5

NOTES:

1. Neoprene seal shall be wrapped around sealing assembly bent PL and shall have no gap around the perimeter. Seal shall be compressed to fit during shroud installation.

REGISTERED PROFESSIONAL ENGINEER Marwan N. Nader No. C 054426 Exp. 12/31/13 CIVIL STATE OF CALIFORNIA

FOR REVISIONS ONLY

CONTRACT CHANGE ORDER NO. 87
SHEET 106 OF 115

REQUESTS FOR INFORMATION NOT ADDRESSED IN THIS CCO REMAIN IN FORCE

ALL DIMENSIONS ARE IN MILLIMETERS UNLESS OTHERWISE SHOWN

R. Valizadeh/V. Toan/Y.L./W.L./F.C.
DESIGN OVERSIGHT
SIGN OFF DATE 04/18/12

MARK	DATE	DESCRIPTIONS	BY	CH'D	CCO#
1	04/18/12	EAST END OBG	MN	GB	87

REVISIONS

DESIGN	BY G. Baker	CHECKED	T. McMeans
DETAILS	BY D. Turner	CHECKED	T. McMeans
QUANTITIES	BY C. Mauch	CHECKED	D. Harrison

PREPARED FOR THE STATE OF CALIFORNIA DEPARTMENT OF TRANSPORTATION

R. Manzanarez
PROJECT ENGINEER

BRIDGE NO. 34-0006L/R
KILOMETER POST 13.2/13.9

SAN FRANCISCO OAKLAND BAY BRIDGE
EAST SPAN SEISMIC SAFETY PROJECT
SELF-ANCHORED SUSPENSION BRIDGE
(SUPERSTRUCTURE & TOWER)

EAST CABLE SHROUD DETAILS NO. 2

Rev. Date: 5-18-98

ORIGINAL SCALE IN MILLIMETERS FOR REDUCED PLANS 0 10 20 30 40 50 60 70 80 90 100

CU 04
EA 0120F1

DISREGARD PRINTS BEARING EARLIER REVISION DATES

REVISION DATES (PRELIMINARY STAGE ONLY) 05/25/99 06/02/99 07/27/01 01/08/02 07/09/02 12/19/02

SHEET 394R1 OF

FILE => I:\bb\04-0120F1\sas\contract plans and cco\cco\cco#87\temp\ogshr06.dgn

100 % PS&E

USERNAME => DWinrow DATE PLOTTED => 18 APR 2012 TIME PLOTTED => 11:32:09

DIST.	COUNTY	ROUTE	KILOMETER POST TOTAL PROJECT	SHEET NO.	TOTAL SHEETS
04	SF	80	13.2/13.9	877R3	1204

George Baker
REGISTERED ENGINEER - CIVIL
12-6-04
PLANS APPROVAL DATE

REGISTERED PROFESSIONAL ENGINEER George S. Baker No. C57112 Exp. 12/31/05 CIVIL STATE OF CALIFORNIA

The State of California or its officers or agents shall not be responsible for the accuracy or completeness of electronic copies of this plan sheet.

T.Y. LIN / MOFFATT & NICHOL
825 BATTERY STREET
SAN FRANCISCO, CA 94111

Caltrans now has a web site! To get to the web site, go to: http://www.dot.ca.gov

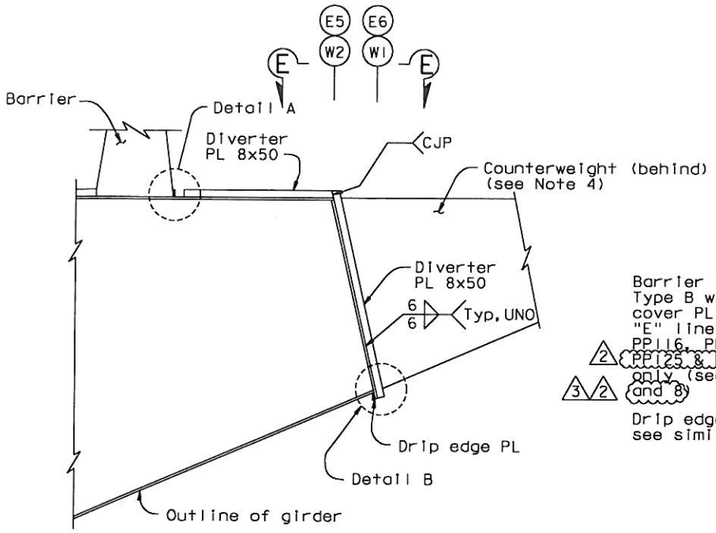

SECTION A-A (SECTION A'-A' SIMILAR) (see Note 6)
1:20

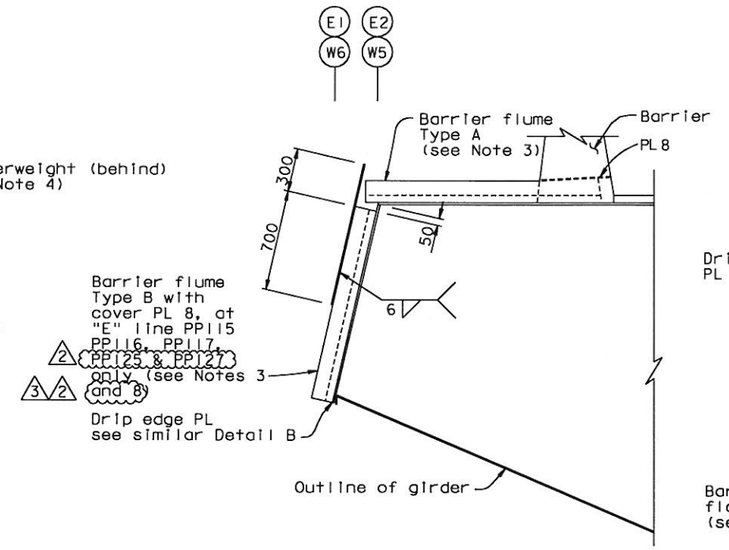

SECTION B-B
1:20

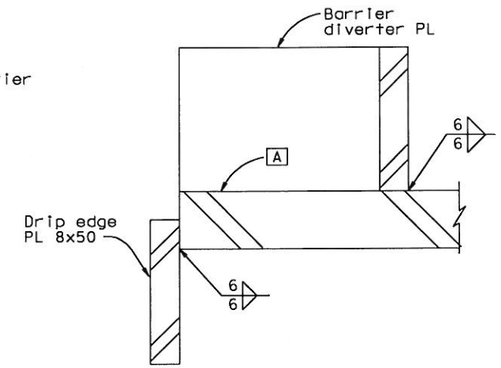

SECTION C-C
1:1

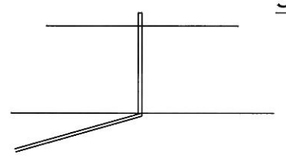

SECTION E-E

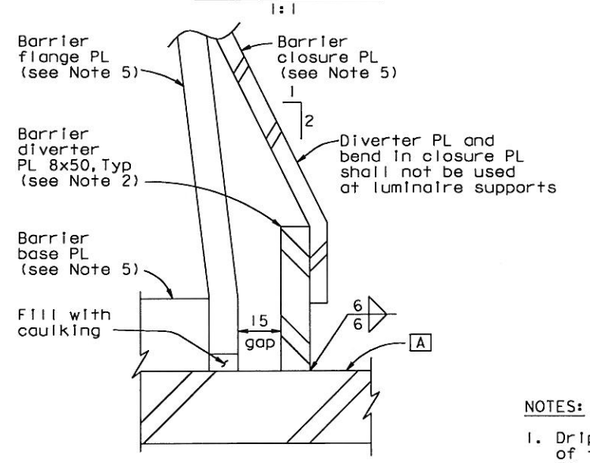

DETAIL A
1:1

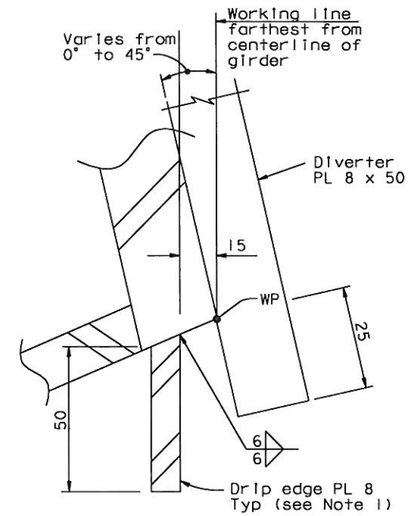

DETAIL B
1:1

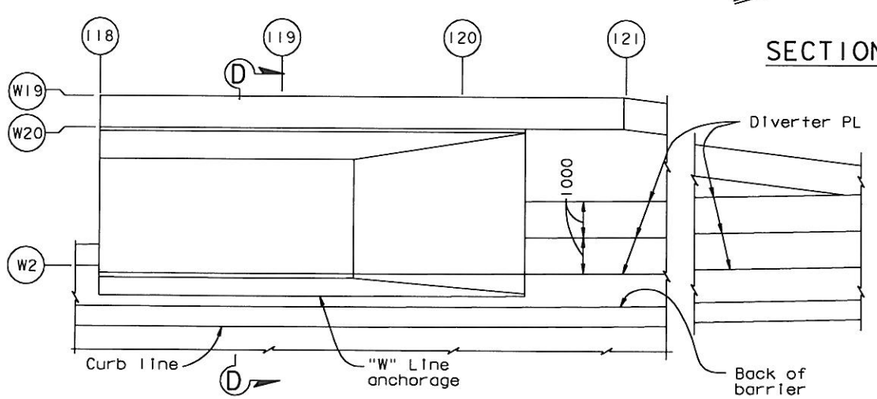

DRAINAGE PLAN AT "W" LINE ANCHORAGE
1:100

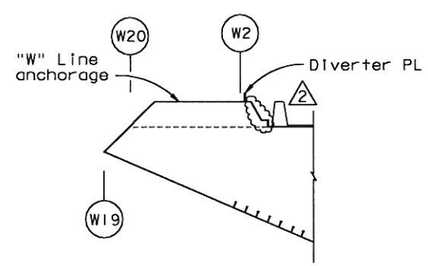

SECTION D-D
1:100

NOTES:

1. Drip edge plate shall be continuous along length of typical girder at working lines W1, W6, E1 and E6. For girder transitions at pier W2, tower and east approach, drip edge plate shall be continuous along bottom corner of working line farthest from the center line of girder.
2. Barrier diverter plate shall be continuous along barriers near working lines W2 and E5, unless otherwise shown.
3. For barrier flume details, see "Deck Drainage Details No.3" sheet.
4. For counterweight details, see "Typical Girder Details" sheets.
5. For barrier details, see "Barrier Details" sheets.
6. Use similar detail where diverter PLs meet edge of girder top face at "W" line anchorage and line E5 at PP 8.5.
7. At all drip edge and diverter plate terminations, the end 40 mm of weld shall be CJP.
8. Type B flume may be omitted at PP 125 and PP 127 if there is interference with the bikepath structure. (2)

Daniel J. Turner
REGISTERED PROFESSIONAL ENGINEER Daniel J. Turner No. C 65033 Exp. 06/30/13 CIVIL STATE OF CALIFORNIA

FOR REVISIONS ONLY

CONTRACT CHANGE ORDER NO. 87
SHEET 107 OF 115

REQUESTS FOR INFORMATION NOT ADDRESSED IN THIS CCO REMAIN IN FORCE

MARK	DATE	DESCRIPTIONS	BY	CH'D	CCO#
3	01/04/13	EAST END OBG	DT	GB	87
2	09/01/11	EAST END OBG	DT	GB	87
1	08/24/07	BARRIER MODIFICATIONS	GB	DT	44

REVISIONS

ALL DIMENSIONS ARE IN MILLIMETERS UNLESS OTHERWISE SHOWN

R. Valizadeh/V. Toan/Y.L./W.L./F.C.
DESIGN OVERSIGHT
Roya Valizadeh / Vong Toan / Y. Liu
SIGN OFF DATE 01/04/13

Rev. Date: 5-18-98

DESIGN	BY G. Baker	CHECKED T. Ho	
DETAILS	BY D. Turner	CHECKED T. Ho	
QUANTITIES	BY G. Baker	CHECKED D. Harrison	

PREPARED FOR THE STATE OF CALIFORNIA DEPARTMENT OF TRANSPORTATION

R. Manzanarez
PROJECT ENGINEER

BRIDGE NO. 34-0006L/R
KILOMETER POST 13.2/13.9

SAN FRANCISCO OAKLAND BAY BRIDGE
EAST SPAN SEISMIC SAFETY PROJECT
SELF-ANCHORED SUSPENSION BRIDGE
(SUPERSTRUCTURE & TOWER)

DECK DRAINAGE DETAILS NO. 2

ORIGINAL SCALE IN MILLIMETERS FOR REDUCED PLANS 0 10 20 30 40 50 60 70 80 90 100

CU 04
EA 0120F1

DISREGARD PRINTS BEARING EARLIER REVISION DATES

REVISION DATES (PRELIMINARY STAGE ONLY) 01/29/99 05/28/99 08/26/99 05/24/01 01/28/02 07/26/02 12/26/02 11/13/05

SHEET 460R3 OF

FILE => L:\BB\04-0120D1\SAS\Contract Plans and CCO\CCO\CCO#87\5-Revision 01-04-13\DGN\akdkd02.dgn

USERNAME => DWinrow DATE PLOTTED => 04 JAN 2013 TIME PLOTTED => 10:03:13

100 % PS&E

DIST.	COUNTY	ROUTE	KILOMETER POST TOTAL PROJECT	SHEET NO.	TOTAL SHEETS
04	SF	80	13.2/13.9	878R3	1204

George Baker
REGISTERED ENGINEER - CIVIL
12-6-04
PLANS APPROVAL DATE

REGISTERED PROFESSIONAL ENGINEER George S. Baker No. C57112 Exp. 12/31/05 CIVIL STATE OF CALIFORNIA

The State of California or its officers or agents shall not be responsible for the accuracy or completeness of electronic copies of this plan sheet.

T.Y. LIN / MOFFATT & NICHOL
825 BATTERY STREET
SAN FRANCISCO, CA 94111

Caltrans now has a web site! To get to the web site, go to: http://www.dot.ca.gov

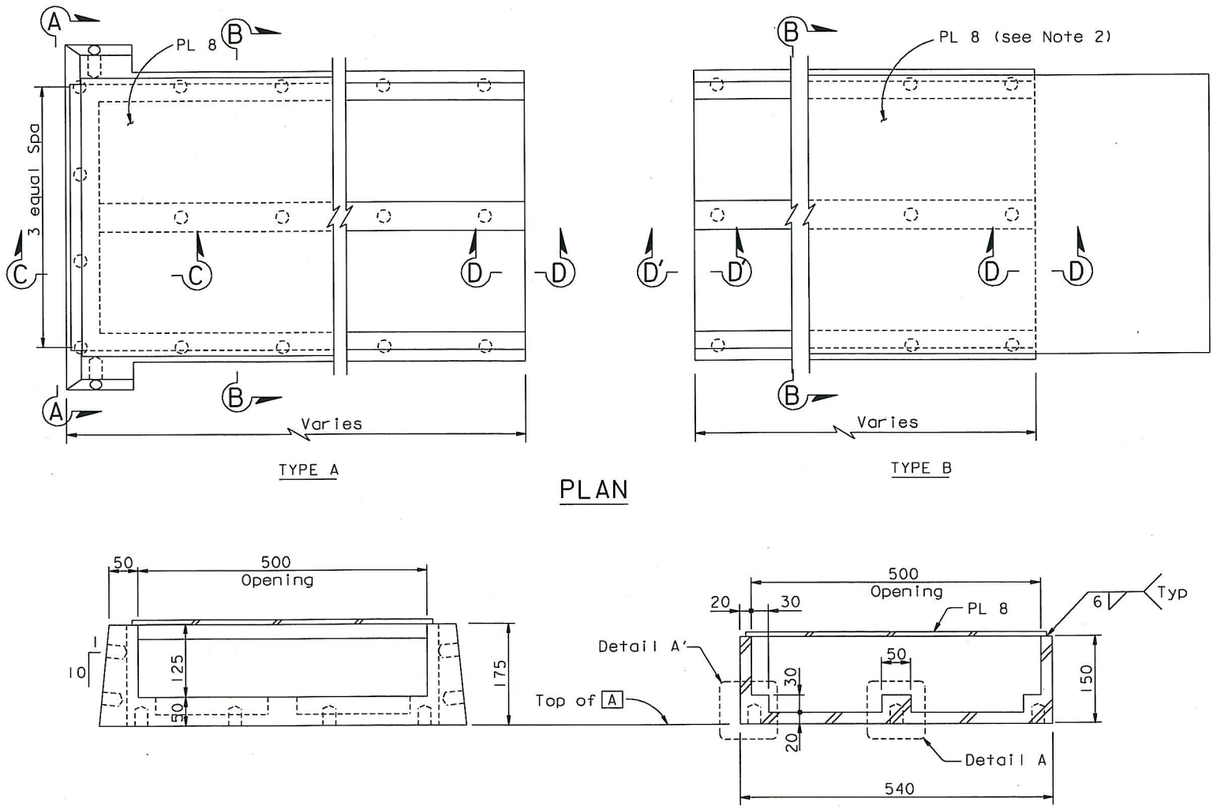

BARRIER FLUME DETAILS (Drainage Type 2 only)
1:5

DRAINAGE TYPE LOCATION TABLE
See Note 1

PANEL POINT					
TYPE 1			TYPE 2		TYPE 3
W2		E5	W5	E2	E5
10	66	19	9	West of 11	16
12	68	25	12	19	22
14	70	31	18	25	28
16	72	37	23	29	34
18	74	49	25	35	46
20	76	55	30	39	52
22	78	61	35	45	58
24	80	67	37	49	64
26	82	73	46	55	70
28	84	79	48	59	76
30	86	85	53	65	82
32	88	91	55	69	88
34	90	97	61	75	94
36	92	103	66	79	100
38	94	108	71	85	106
40	96	115	73	89	112
42	98	117	78	95	120
44	100	124	84	99	127
46	102		89	105	
48	104		91	111	
50	106		96	115	
52	110		101	116	
54	112		103	117	
56	114		107	123	
58	116		113	125	
60	118		116	127	
62			117	128	
64			120.5		
			121		
			122		
			123		
			123.5		
			124		
			127		
			127.5		
			3		

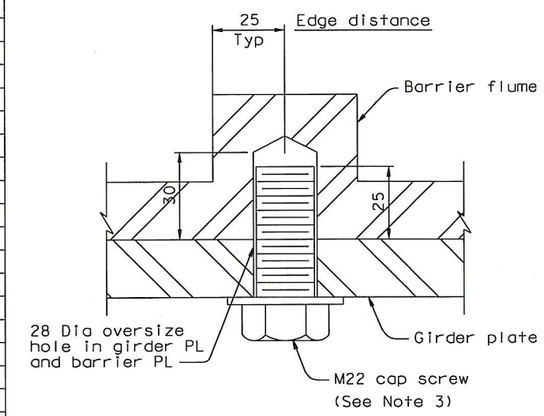

DETAIL A (A' Similar)
1:1

NOTES:

1. Drainage types 1, 2 and 3 are located to the nearest working line indicated. Types 2 and 3 are located east of the panel point unless noted otherwise. Type 1 is located west of panel point.
2. For the extent of PL 8 at Type B Flume, see Section B-B, "Deck Drainage Details No. 2" sheet.
3. Cap screws shall be galvanized A307 bolts and shall be used with a thread locking system.

Daniel J. Turner
REGISTERED PROFESSIONAL ENGINEER Daniel J. Turner No. C 65033 Exp. 06/30/13 CIVIL STATE OF CALIFORNIA

FOR REVISIONS ONLY

CONTRACT CHANGE ORDER NO. 87
SHEET 108 OF 115

REQUESTS FOR INFORMATION NOT ADDRESSED IN THIS CCO REMAIN IN FORCE

MARK	DATE	DESCRIPTIONS	BY	CH'D	CCO#
3	09/01/11	EAST END OBG	DT	GB	87
2	06/13/08	BARRIER MODIFICATIONS	GB	DT	44
1	08/24/07	BARRIER MODIFICATIONS	GB	DT	44

REVISIONS

R. Vallzadeh/V. Toan/Y.L./W.L./F.C.
DESIGN OVERSIGHT
Ryan Vallzadeh / Vang P. Toan / Y. Liu
SIGN OFF DATE 09/01/11

Rev. Date: 5-18-98

DESIGN	BY G. Baker	CHECKED T. Ho	
DETAILS	BY D. Turner	CHECKED T. Ho	
QUANTITIES	BY G. Baker	CHECKED D. Harrison	

PREPARED FOR THE STATE OF CALIFORNIA DEPARTMENT OF TRANSPORTATION

R. Manzanarez
PROJECT ENGINEER

ALL DIMENSIONS ARE IN MILLIMETERS UNLESS OTHERWISE SHOWN

ORIGINAL SCALE IN MILLIMETERS FOR REDUCED PLANS 0 10 20 30 40 50 60 70 80 90 100

CU 04
EA 0120F1

BRIDGE NO. 34-0006L/R
KILOMETER POST 13.2/13.9

DISREGARD PRINTS BEARING EARLIER REVISION DATES 05/08/99 08/08/99 05/31/01 01/08/02 01/01/02 12/19/02

SAN FRANCISCO OAKLAND BAY BRIDGE
EAST SPAN SEISMIC SAFETY PROJECT
SELF-ANCHORED SUSPENSION BRIDGE
(SUPERSTRUCTURE & TOWER)

DECK DRAINAGE DETAIL NO. 3

SHEET 461R3 OF

FILE => I:\bb\04-012001\sas\contract plans and cco\cco\cco#87\1-original 09-01-11\dgn\akdkd03.dgn

100 % PS&E

USERNAME => AL1shansk; DATE PLOTTED => 30 AUG 2011 TIME PLOTTED => 14:41:57

DIST.	COUNTY	ROUTE	KILOMETER POST TOTAL PROJECT	SHEET NO.	TOTAL SHEETS
04	SF	80	13.2/13.9	943R3	1204

Caltrans Metric

George Baker
REGISTERED ENGINEER - CIVIL
12-6-04
PLANS APPROVAL DATE

REGISTERED PROFESSIONAL ENGINEER George S. Baker No. C57112 Exp. 12/31/05 CIVIL STATE OF CALIFORNIA

The State of California or its officers or agents shall not be responsible for the accuracy or completeness of electronic copies of this plan sheet.

T.Y. LIN / MOFFATT & NICHOL
825 BATTERY STREET
SAN FRANCISCO, CA 94111

Caltrans now has a web site! To get to the web site, go to: http://www.dot.ca.gov

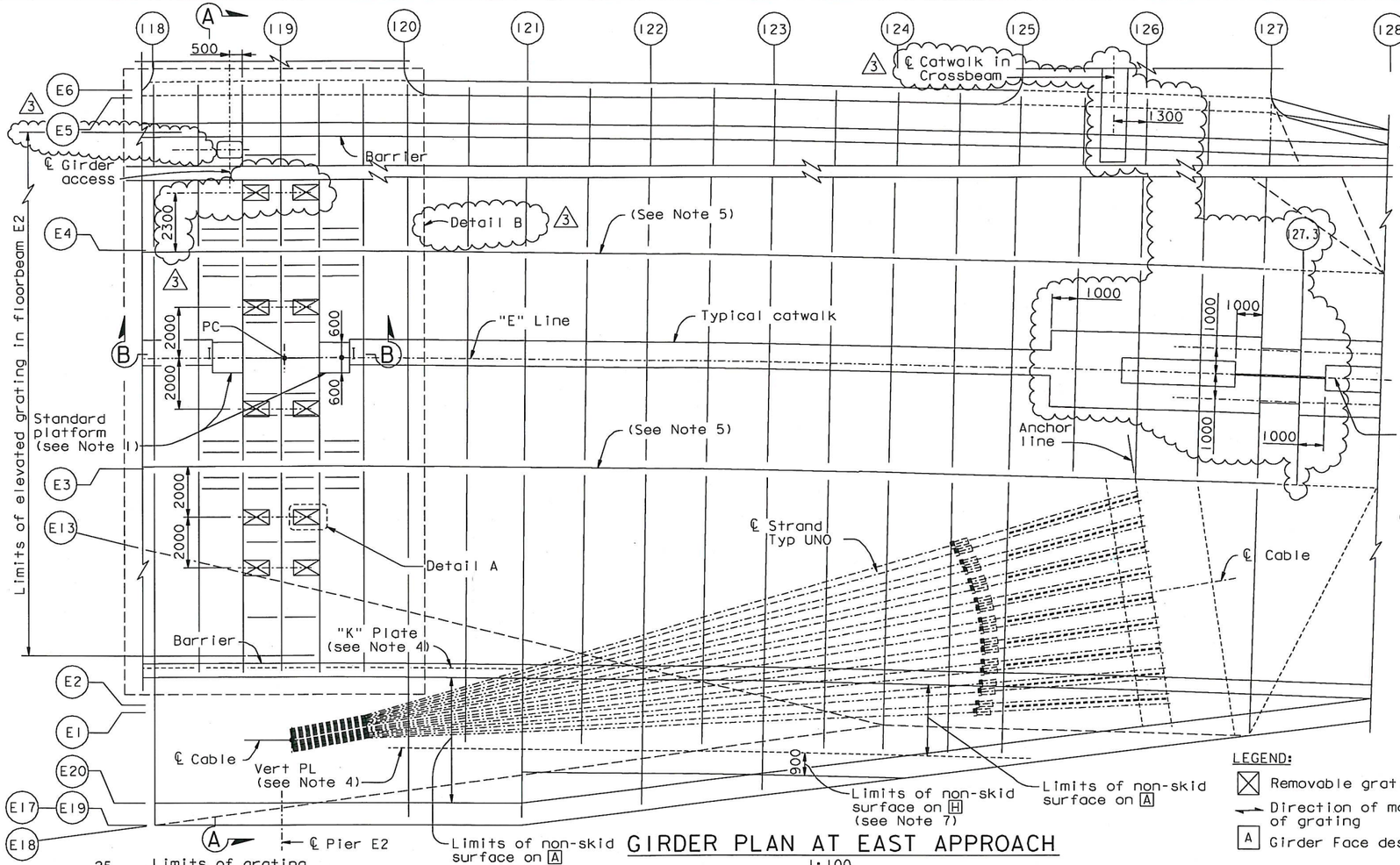

GIRDER PLAN AT EAST APPROACH

1:100

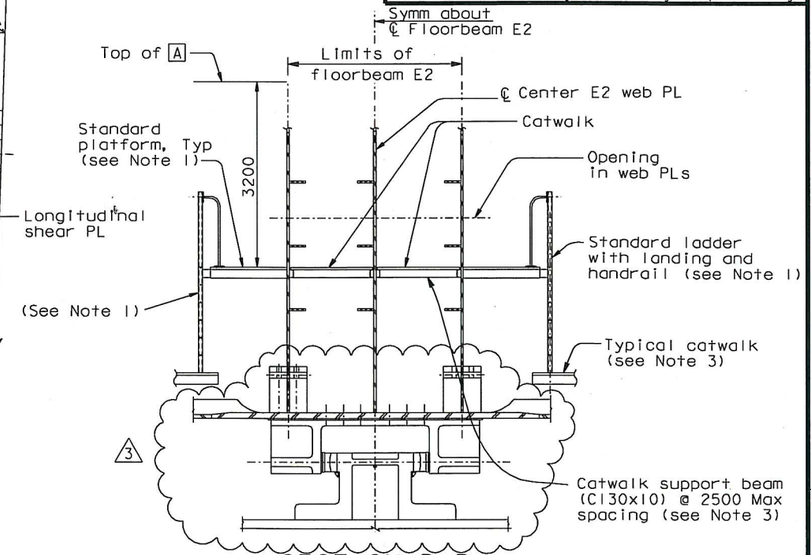

SECTION B-B

1:50

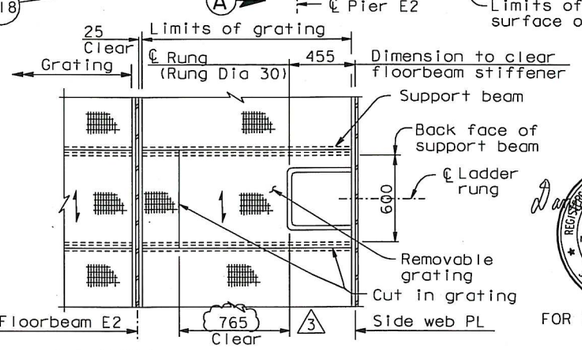

DETAIL A

1:20

REGISTERED PROFESSIONAL ENGINEER Daniel J. Turner No. C 65033 Exp. 06/30/13 CIVIL STATE OF CALIFORNIA

FOR REVISIONS ONLY

CONTRACT CHANGE ORDER NO. 87
SHEET 109 OF 115

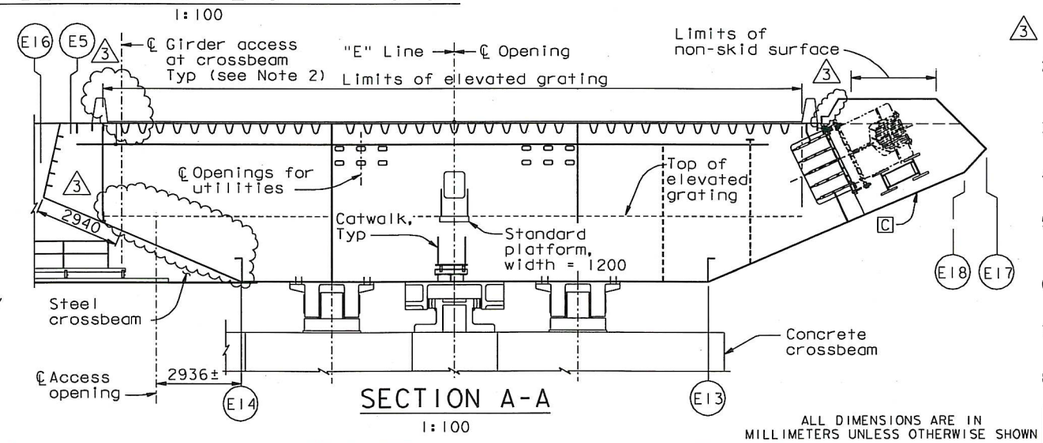

SECTION A-A

1:100

LEGEND:

- ☒ Removable grating access
- ⟷ Direction of main reinforcement of grating
- A Girder Face designation A

NOTES:

1. For standard platform, ladder and railing, see "Tower Access Details" sheets. Channel 75 ladder rails shall be spaced at 500 mm back-to-back. Landing handrails shall be spaced at 500 mm clear or greater. At the contractor's option, it is acceptable to use A992 Gr 345 or A572 Gr 345 in lieu of A709 Gr 345 for channel 75. (3)
2. For access openings and rungs, see "Typical Girder Details No. 15", "Crossbeam At Pier E2", and "Girder At Pier E2" sheets.
3. For catwalk details not shown, see "Girder Access Details No. 2" sheet.
4. For "K" plate and vertical plate access openings, see "Girder At East Transition Details" sheets.
5. For access openings in longitudinal shear plates, see "Typical Girder Details No. 7" and "Girder At East Transition No. 9" sheets.
6. For other access openings, see "Floorbeam At East Transition" sheets.
7. Within limits shown, apply non-skid surface to face H and the upper face of longitudinal stiffeners.
8. Locate crossbeam catwalk 1300 west of west side web.

ALL DIMENSIONS ARE IN MILLIMETERS UNLESS OTHERWISE SHOWN

REQUESTS FOR INFORMATION NOT ADDRESSED IN THIS CCO REMAIN IN FORCE

MARK	DATE	DESCRIPTIONS	BY	CH'D	CCO#
3	09/01/11	EAST END OBG	DT	GB	87
2	06/29/11	ADDITIONAL PAINTING	DT	JD	94
1	11/05/10	PP119 ACCESS & PP125 PLATES	GB	DT	86

REVISIONS

R. Valizadeh/V. Toan/Y.L./W.L./F.C.
DESIGN OVERSIGHT
SIGN OFF DATE 09/01/11

	BY	CHECKED
DESIGN	C. Baker	T. McMeans
DETAILS	C. Mauch	T. McMeans
QUANTITIES	C. Mauch	J. Leventini

PREPARED FOR THE STATE OF CALIFORNIA DEPARTMENT OF TRANSPORTATION

R. Manzanarez
PROJECT ENGINEER

BRIDGE NO. 34-0006L/R
KILOMETER POST 13.2/13.9

SAN FRANCISCO OAKLAND BAY BRIDGE
EAST SPAN SEISMIC SAFETY PROJECT
SELF-ANCHORED SUSPENSION BRIDGE
(SUPERSTRUCTURE & TOWER)

GIRDER ACCESS DETAILS NO. 3

Rev. Date: 5-18-98

ORIGINAL SCALE IN MILLIMETERS FOR REDUCED PLANS 0 10 20 30 40 50 60 70 80 90 100

CU 04
EA 0120F1

DISREGARD PRINTS BEARING EARLIER REVISION DATES

REVISION DATES (PRELIMINARY STAGE ONLY): 01/25/99 05/14/99 08/09/99 05/31/01 04/08/02 07/09/02 12/13/02 12/01/05

SHEET 526R3 OF

FILE => I:\bb\04-012001\sas\contract plans and cco\cco\cco#87\1-original 09-01-11\dgn\akacc13.dgn

USERNAME => A.Ashanski DATE PLOTTED => 30 AUG 2011 TIME PLOTTED => 14:16:14

100 % PS&E

DIST.	COUNTY	ROUTE	KILOMETER POST TOTAL PROJECT	SHEET NO.	TOTAL SHEETS
04	SF	80	13.2/13.9	943SIRI	1204

Caltrans Metric

Daniel J. Turner
REGISTERED ENGINEER - CIVIL

11-05-10
PLANS APPROVAL DATE

REGISTERED PROFESSIONAL ENGINEER Daniel J. Turner No. C 65033 Exp. 06/30/13 CIVIL STATE OF CALIFORNIA

The State of California or its officers or agents shall not be responsible for the accuracy or completeness of electronic copies of this plan sheet.

T.Y. LIN / MOFFATT & NICHOL
825 BATTERY STREET
SAN FRANCISCO, CA 94111

Caltrans now has a web site! To get to the web site, go to: http://www.dot.ca.gov

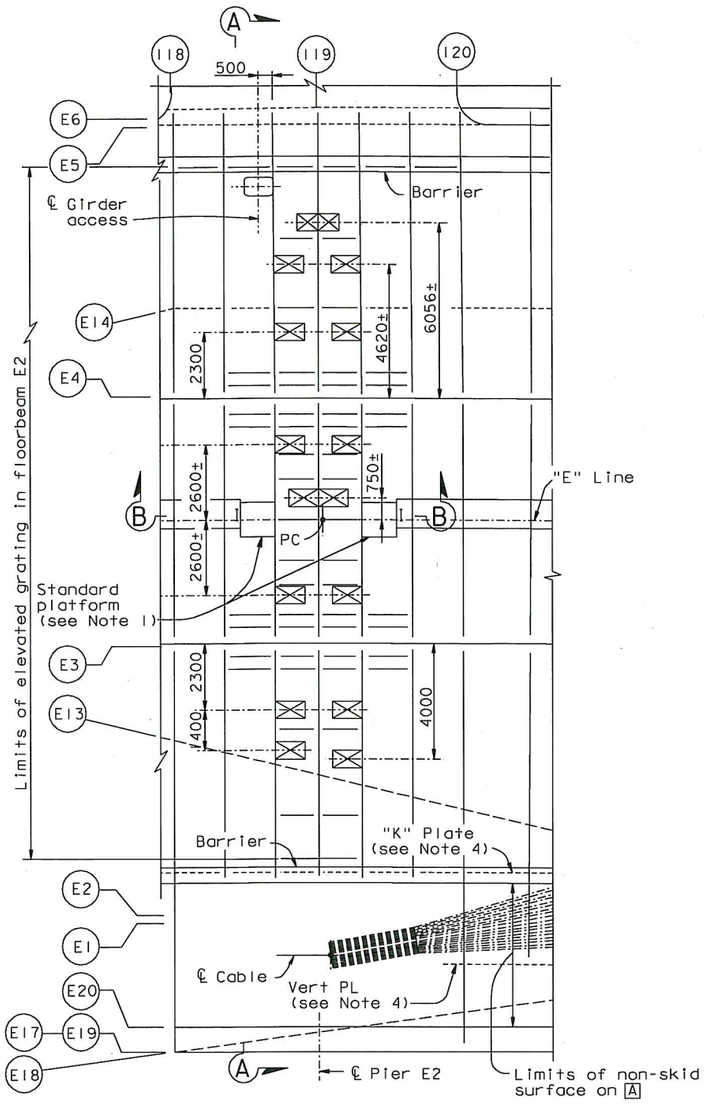

DETAIL B
1:100

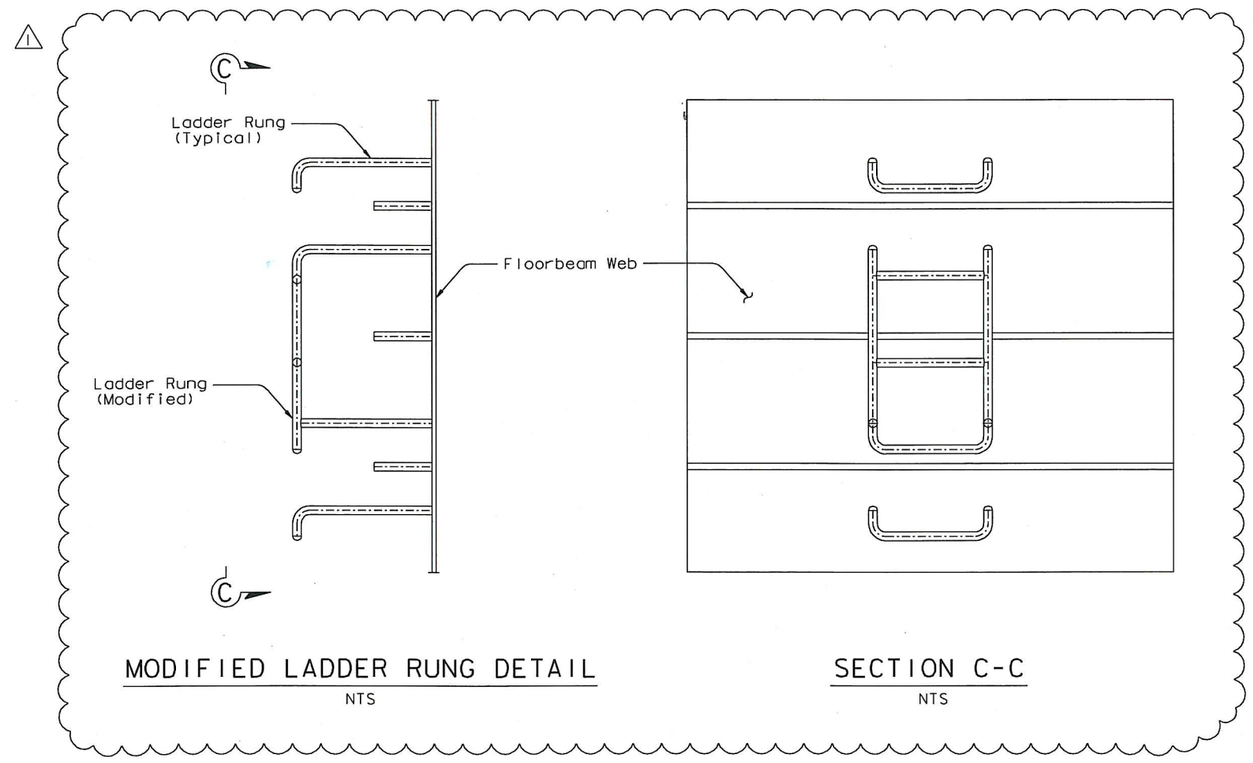

MODIFIED LADDER RUNG DETAIL
NTS

SECTION C-C
NTS

CONTRACT CHANGE ORDER NO. 87
SHEET 110 OF 115

REQUESTS FOR INFORMATION NOT ADDRESSED IN THIS CCO REMAIN IN FORCE

ALL DIMENSIONS ARE IN MILLIMETERS UNLESS OTHERWISE SHOWN

MARK	DATE	DESCRIPTIONS	BY	CH'D	CCO#
1	09/01/11	EAST END OBG	DT	GB	87
0	11/05/10	PP119 ACCESS & PP125 PLATES	GB	DT	86

REVISIONS

R. Vallzadeh/V. Toan/Y.L./W.L./F.C.
DESIGN OVERSIGHT
Roya Vallzadeh / Vang P. Toan / Y. Liu
SIGN OFF DATE 09/01/11

	BY	CHECKED
DESIGN	G. Baker	D. Turner
DETAILS	G. Baker	D. Turner
QUANTITIES	G. Baker	D. Turner

PREPARED FOR THE STATE OF CALIFORNIA DEPARTMENT OF TRANSPORTATION

R. Manzanarez
PROJECT ENGINEER

BRIDGE NO. 34-0006L/R
KILOMETER POST 13.2/13.9

SAN FRANCISCO OAKLAND BAY BRIDGE
EAST SPAN SEISMIC SAFETY PROJECT
SELF-ANCHORED SUSPENSION BRIDGE
(SUPERSTRUCTURE & TOWER)

GIRDER ACCESS DETAILS NO. 3A

Rev. Date: 5-18-98

ORIGINAL SCALE IN MILLIMETERS FOR REDUCED PLANS 0 10 20 30 40 50 60 70 80 90 100

CU 04
EA 0120F1

DISREGARD PRINTS BEARING EARLIER REVISION DATES 11/05/10

REVISION DATES (PRELIMINARY STAGE ONLY)

SHEET 526SIRI OF

FILE => I:\bb\04-012001\sas\contract plans and cco\cco\cco#87\1-original 09-01-11\dgn\akacc13a.dgn

100 % PS&E

USERNAME => ALishonsk DATE PLOTTED => 30 AUG 2011 TIME PLOTTED => 14:18:48

DIST.	COUNTY	ROUTE	KILOMETER POST TOTAL PROJECT	SHEET NO.	TOTAL SHEETS
04	SF	80	13.2/13.9	949R2	1204

REGISTERED ENGINEER - CIVIL

12-6-04

PLANS APPROVAL DATE

REGISTERED PROFESSIONAL ENGINEER Marwan N. Nader No. C 054426 Exp. 12/31/11 CIVIL STATE OF CALIFORNIA

The State of California or its officers or agents shall not be responsible for the accuracy or completeness of electronic copies of this plan sheet.

T.Y. LIN / MOFFATT & NICHOL
825 BATTERY STREET
SAN FRANCISCO, CA 94111

Caltrans now has a web site! To get to the web site, go to: http://www.dot.ca.gov

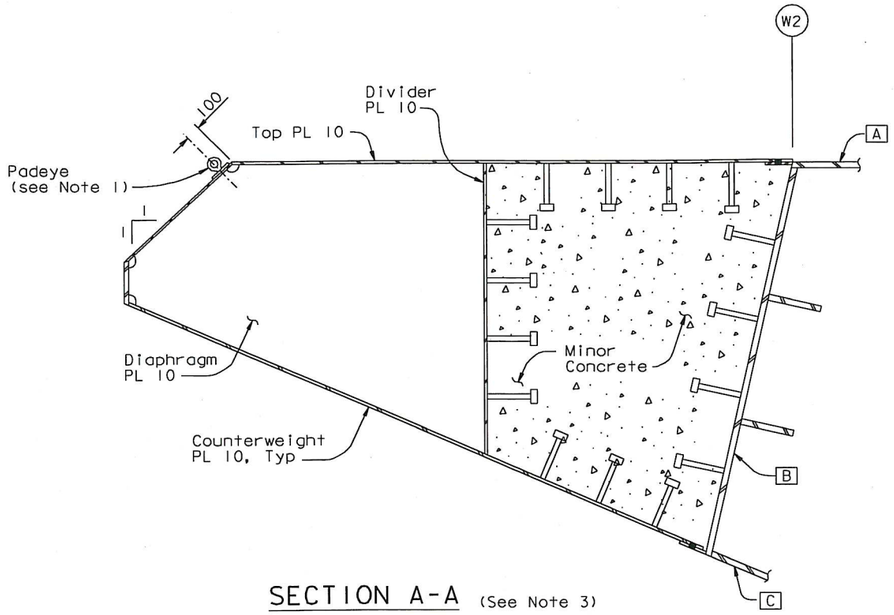

SECTION A-A (See Note 3)
1:20

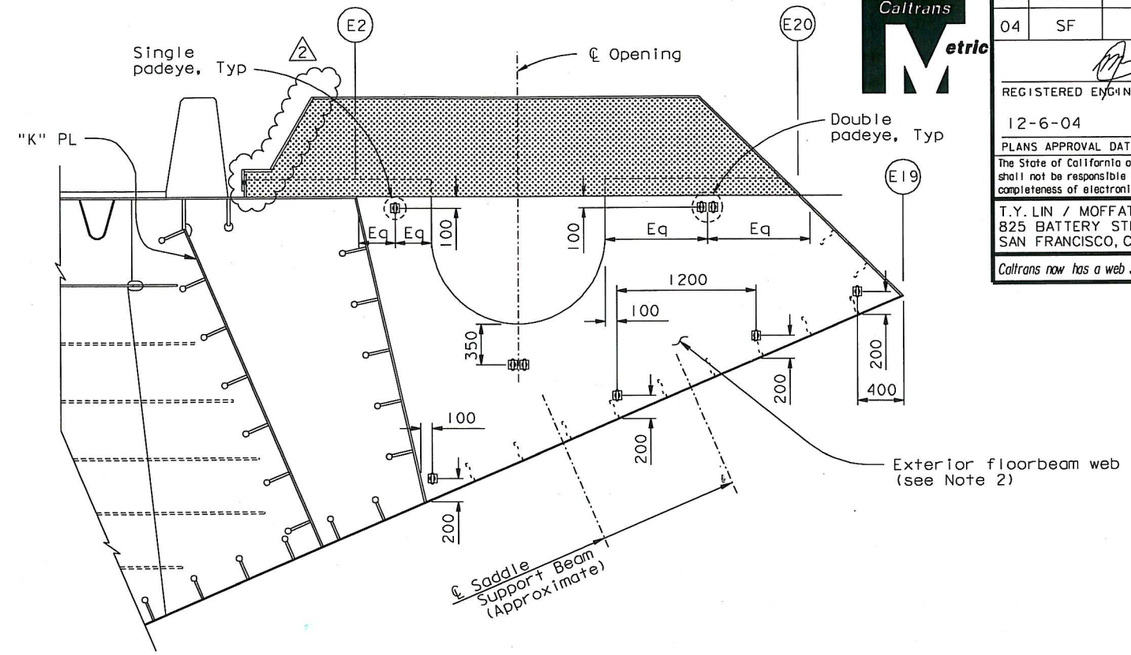

GIRDER ACCESS AT
EXTERIOR PLATE AT PP118
1:25

("E" Line shown,
"W" Line similar)

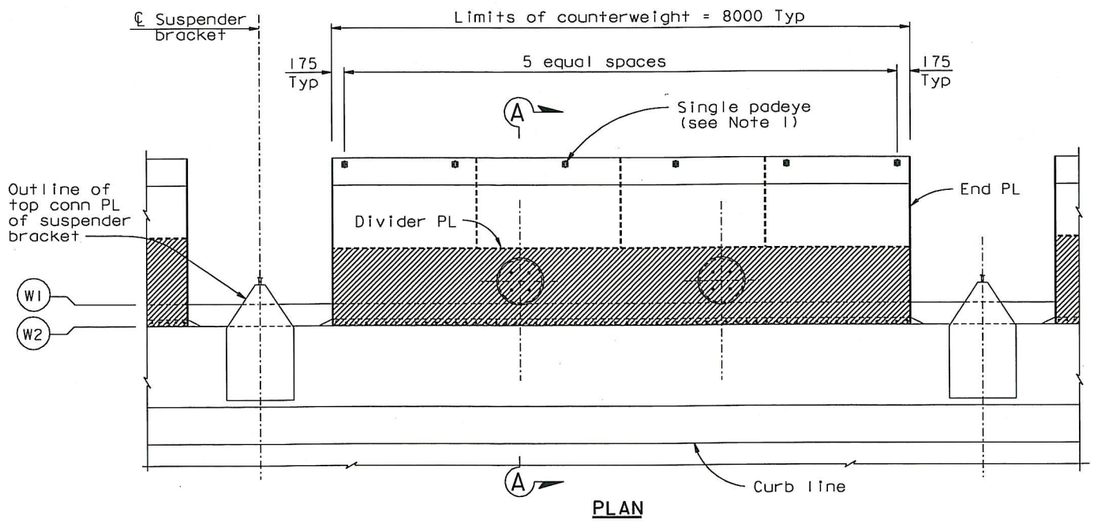

PLAN

COUNTERWEIGHT ACCESS LAYOUT
1:40

LEGEND:

Limits of minor concrete

Cable Saddle housing

NOTES:

1. For counterweight padeye use "Padeye At Bikepath Detail", see "Girder Access Details No. 10" sheet.
2. For saddle housing details, see "East Saddle Housing Details" sheets.
3. For counterweight details, see "Typical Girder Details No. 17" sheet.
4. Eliminate the detailed padeyes on the box girder, including the bikepath and the counterweights, unless directed otherwise by the Engineer.

CONTRACT CHANGE ORDER NO. 87
SHEET 111 OF 115

REQUESTS FOR INFORMATION NOT ADDRESSED IN THIS CCO REMAIN IN FORCE

ALL DIMENSIONS ARE IN MILLIMETERS UNLESS OTHERWISE SHOWN

R. Valizadeh/V. Toan/Y.L./W.L./F.C.
DESIGN OVERSIGHT
Roya Valizadeh / Vong P. Toan / Y. Liu
SIGN OFF DATE 09/01/11

MARK	DATE	DESCRIPTIONS	BY	CH'D	CCO#
2	09/01/11	EAST END OBG	MN	DT	87
1	05/01/09	PADEYE MODIFICATIONS	GB	MN	41

REVISIONS

DESIGN	BY M. Nader	CHECKED	N. Vo
DETAILS	BY M. Roberts	CHECKED	N. Vo
QUANTITIES	BY M. Roberts	CHECKED	N. Vo

PREPARED FOR THE STATE OF CALIFORNIA DEPARTMENT OF TRANSPORTATION

R. Manzanarez
PROJECT ENGINEER

BRIDGE NO. 34-0006L/R
KILOMETER POST 13.2/13.9

SAN FRANCISCO OAKLAND BAY BRIDGE
EAST SPAN SEISMIC SAFETY PROJECT
SELF-ANCHORED SUSPENSION BRIDGE
(SUPERSTRUCTURE & TOWER)

GIRDER ACCESS DETAILS NO. 9

Rev. Date: 5-18-98

ORIGINAL SCALE IN MILLIMETERS FOR REDUCED PLANS 0 10 20 30 40 50 60 70 80 90 100

CU 04
EA 0120F1

DISREGARD PRINTS BEARING EARLIER REVISION DATES

REVISION DATES (PRELIMINARY STAGE ONLY) 04/08/02 07/01/02 12/15/02

SHEET 532R2 OF

FILE => I:\bb\04-012001\sas\contract plans and cco\cco\cco#87\1-original 09-01-11\dgn\akacc09b.dgn

100% PS&E

USERNAME => ALishansk DATE PLOTTED => 30 AUG 2011 TIME PLOTTED => 14:14:32

DIST.	COUNTY	ROUTE	KILOMETER POST TOTAL PROJECT	SHEET NO.	TOTAL SHEETS
04	SF	80	13.2/13.9	951R4	1204

REGISTERED ENGINEER - CIVIL

12-6-04

PLANS APPROVAL DATE

REGISTERED PROFESSIONAL ENGINEER Marwan N. Nader No. C 054426 Exp. 12/31/11 CIVIL STATE OF CALIFORNIA

The State of California or its officers or agents shall not be responsible for the accuracy or completeness of electronic copies of this plan sheet.

T.Y. LIN / MOFFATT & NICHOL
825 BATTERY STREET
SAN FRANCISCO, CA 94111

Caltrans now has a web site! To get to the web site, go to: http://www.dot.ca.gov

Caltrans Metric

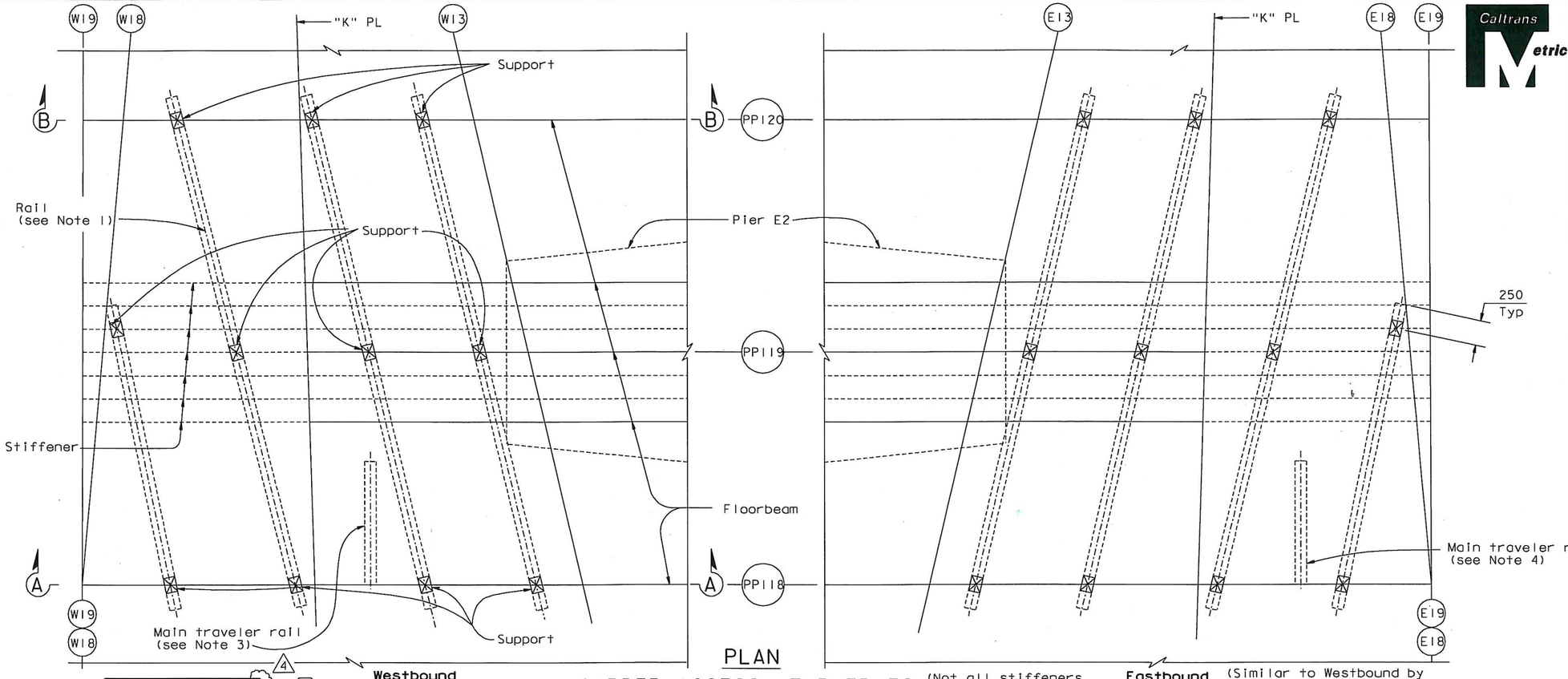

PLAN

GIRDER ACCESS AT PIER E2 (Not all stiffeners shown for clarity)

1:50

Westbound

Eastbound (Similar to Westbound by opposite hand except as shown)

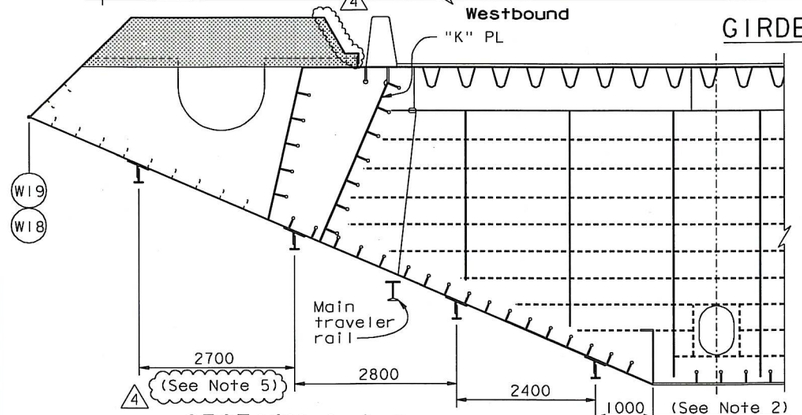

SECTION A-A (Westbound shown, Eastbound similar)

1:50

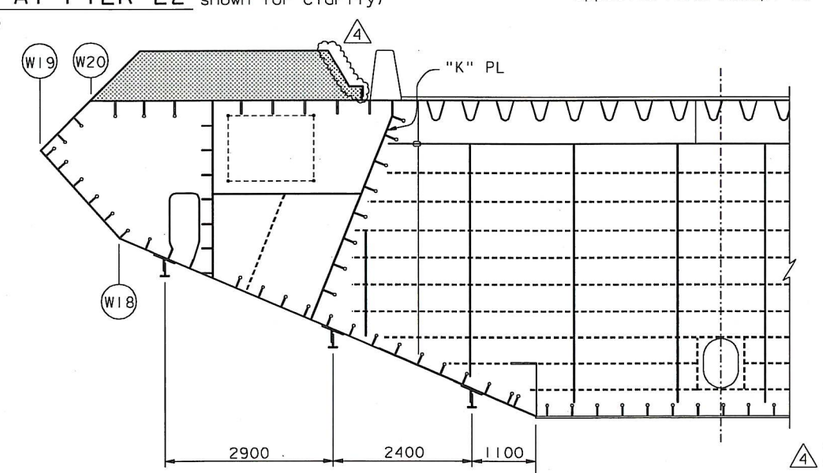

SECTION B-B

1:50

(Westbound shown, Eastbound similar)

ALL DIMENSIONS ARE IN MILLIMETERS UNLESS OTHERWISE SHOWN

LEGEND:

Cable Saddle housing

NOTES:

1. For rail details, see "Crossbeam Access Details No. 4" sheet.
2. Adjust support locations as neccessary to clear main traveler rail.
3. For main traveler rail layout, see "SAS-WB Traveler-Operating Ranges" sheets.
4. For main traveler rail layout, see "SAS-EB Traveler-Operating Ranges" sheets.
5. Location of outermost rail shall be adjusted by one to two stiffener bays to clear the architectural splice.

CONTRACT CHANGE ORDER NO. 87
SHEET 112 OF 115

REVISION 2
SUPERSEDES
REVISION 1

REQUESTS FOR INFORMATION NOT ADDRESSED IN THIS CCO REMAIN IN FORCE

MARK	DATE	DESCRIPTIONS	BY	CH'D	CCO#
4	09/01/11	EAST END OBG	MN	DT	87
3	04/08/10	TRAVELER RAIL MODIFICATIONS	MN	NV	2450
2	06/19/09	TRAVELER RAIL MODIFICATIONS	MN	NV	2450
1	07/20/07	RAIL CHANGE & MISCELLANEOUS DETAILS	MN	NV	24

REVISIONS

R. Vallzadeh/V. Toan/Y.L./W.L./F.C.
DESIGN OVERSIGHT
SIGN OFF DATE 09/01/11

Rev. Date: 5-18-98

DESIGN	BY M. Nader	CHECKED N. Vo	
DETAILS	BY G. Baker	CHECKED N. Vo	
QUANTITIES	BY G. Baker	CHECKED N. Vo	

PREPARED FOR THE STATE OF CALIFORNIA DEPARTMENT OF TRANSPORTATION

R. Manzanarez
PROJECT ENGINEER

BRIDGE NO. 34-0006L/R
KILOMETER POST 13.2/13.9

SAN FRANCISCO OAKLAND BAY BRIDGE
EAST SPAN SEISMIC SAFETY PROJECT
SELF-ANCHORED SUSPENSION BRIDGE
(SUPERSTRUCTURE & TOWER)

GIRDER ACCESS DETAILS NO. 11

ORIGINAL SCALE IN MILLIMETERS FOR REDUCED PLANS 0 10 20 30 40 50 60 70 80 90 100

CU 04
EA 0120F1

DISREGARD PRINTS BEARING EARLIER REVISION DATES → 04/08/02 01/07/02 12/19/02

SHEET 534R4 OF

FILE => I:\bb\04-012001\sas\contract plans and cco\cco\cco#87\1-original 09-01-11\dgn\akacc17a.dgn

100 % PS&E

USERNAME => ALishanski, DATE PLOTTED => 30 AUG 2011 TIME PLOTTED => 14:33:26

DIST.	COUNTY	ROUTE	KILOMETER POST TOTAL PROJECT	SHEET NO.	TOTAL SHEETS
04	SF	80	13.2/13.9	959R1	1204

George Baker
REGISTERED ENGINEER - CIVIL
12-6-04
PLANS APPROVAL DATE

REGISTERED PROFESSIONAL ENGINEER George S. Baker No. C 57112 Exp. 12/31/05 CIVIL STATE OF CALIFORNIA

The State of California or its officers or agents shall not be responsible for the accuracy or completeness of electronic copies of this plan sheet.

T.Y. LIN / MOFFATT & NICHOL
825 BATTERY STREET
SAN FRANCISCO, CA 94111

Caltrans now has a web site! To get to the web site, go to: http://www.dot.ca.gov

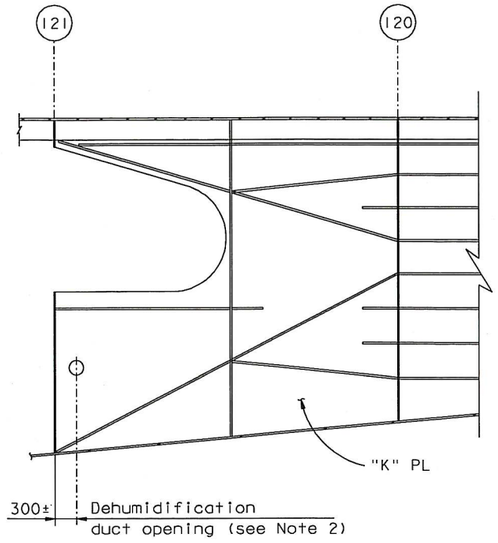

SECTION A-A
1:40

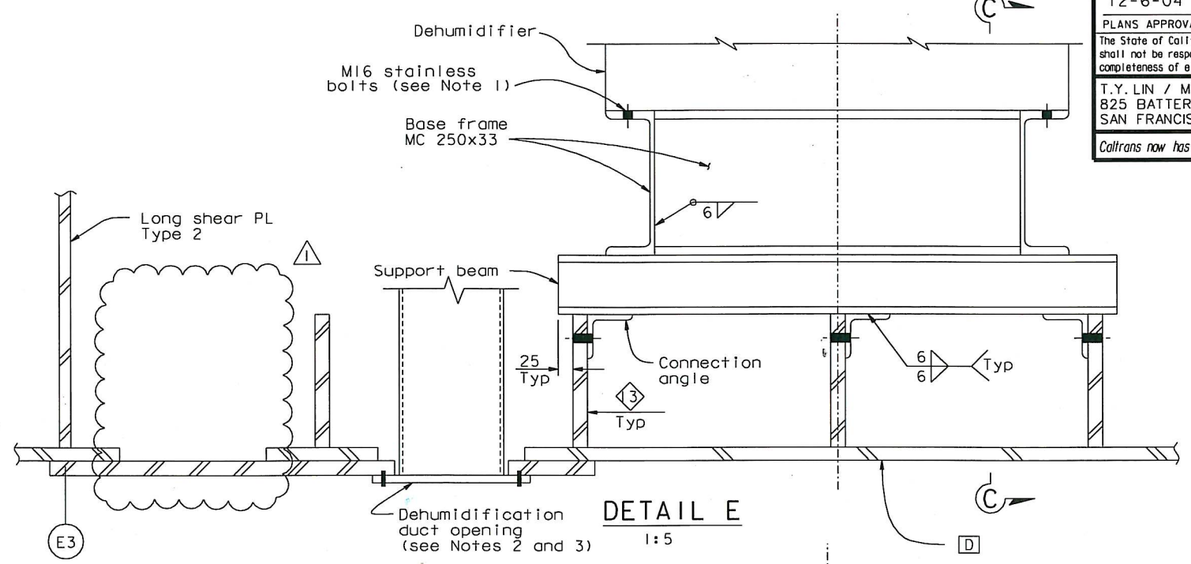

DETAIL E
1:5

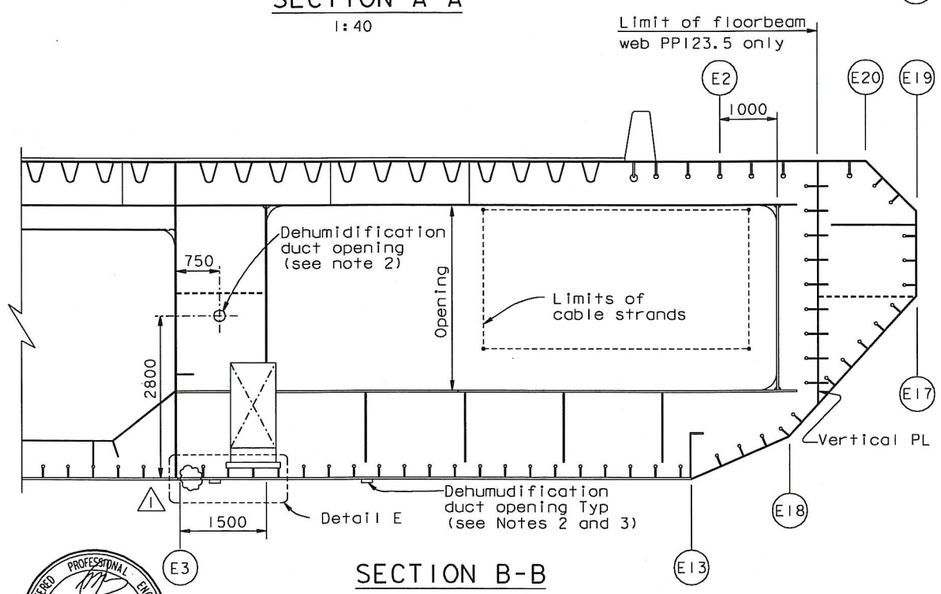

SECTION B-B
1:50

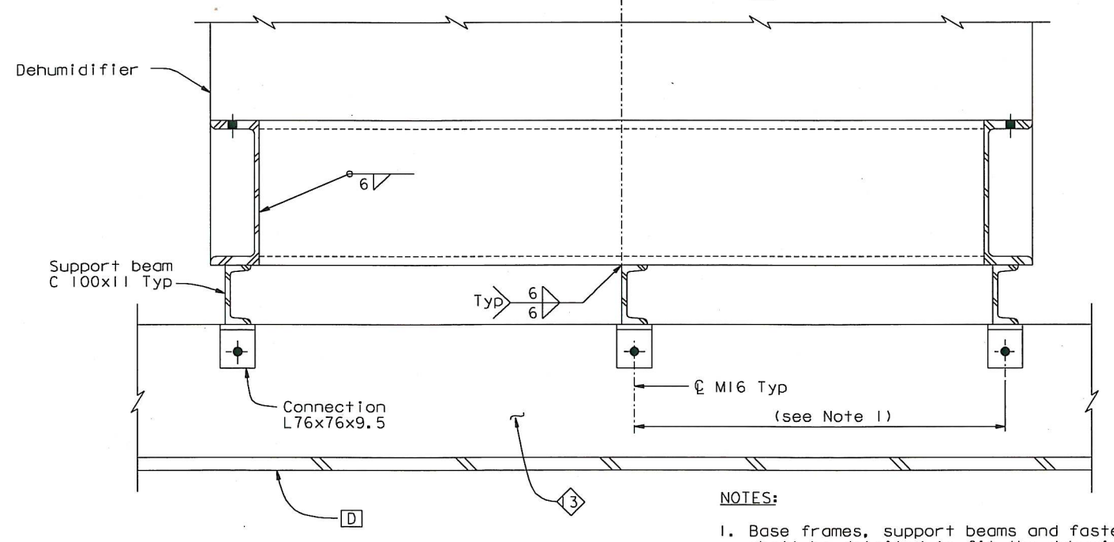

SECTION C-C
1:5

NOTES:

1. Base frames, support beams and fasteners shall be detailed to fit the dehumidifier.
2. For Duct opening details, see "Dehumidification Support Details No.5" sheet.
3. For location of duct openings, see "East Cable Anchorage Dehumidification Details" sheets.

REGISTERED PROFESSIONAL ENGINEER Marwan N. Nader No. C 054426 Exp. 12/31/13 CIVIL STATE OF CALIFORNIA

FOR REVISIONS ONLY

CONTRACT CHANGE ORDER NO. 87
SHEET 113 OF 115

REQUESTS FOR INFORMATION NOT ADDRESSED IN THIS CCO REMAIN IN FORCE

ALL DIMENSIONS ARE IN MILLIMETERS UNLESS OTHERWISE SHOWN

MARK	DATE	DESCRIPTIONS	BY	CH'D	CCO#
1	04/18/12	EAST END OBG	MN	GB	87

REVISIONS

R. Valizadeh/V. Toan/Y.L./W.L./F.C.
DESIGN OVERSIGHT
SIGN OFF DATE 04/18/12

DESIGN BY G. Baker CHECKED T. Ho
DETAILS BY C. Mauch CHECKED T. Ho
QUANTITIES BY C. Mauch CHECKED D. Harrison

PREPARED FOR THE STATE OF CALIFORNIA DEPARTMENT OF TRANSPORTATION

R. Manzanarez
PROJECT ENGINEER

BRIDGE NO. 34-0006L/R
KILOMETER POST 13.2/13.9

SAN FRANCISCO OAKLAND BAY BRIDGE
EAST SPAN SEISMIC SAFETY PROJECT
SELF-ANCHORED SUSPENSION BRIDGE
(SUPERSTRUCTURE & TOWER)

DEHUMIDIFICATION SUPPORT DETAILS NO. 3

Rev. Date: 5-18-98

ORIGINAL SCALE IN MILLIMETERS FOR REDUCED PLANS 0 10 20 30 40 50 60 70 80 90 100

CU 04
EA 0120F1

DISREGARD PRINTS BEARING EARLIER REVISION DATES

REVISION DATES (PRELIMINARY STAGE ONLY) 05/22/99 08/22/99 05/17/01 01/28/02 07/01/02 12/19/02

SHEET 542R1 OF

FILE => I:\bb\04-012001\sas\contract plans and cco\cco\cco#87\temp\okdeh03.dgn

100 % PS&E

USERNAME => DWinrow DATE PLOTTED => 18 APR 2012 TIME PLOTTED => 11:33:08

DIST.	COUNTY	ROUTE	KILOMETER POST TOTAL PROJECT	SHEET NO.	TOTAL SHEETS
04	SF	80	13.2/13.9	986R1	1204

George Baker
REGISTERED ENGINEER - CIVIL
12-6-04
PLANS APPROVAL DATE

REGISTERED PROFESSIONAL ENGINEER George S. Baker No. C57112 Exp. 12/31/05 CIVIL STATE OF CALIFORNIA

The State of California or its officers or agents shall not be responsible for the accuracy or completeness of electronic copies of this plan sheet.

T.Y. LIN / MOFFATT & NICHOL
825 BATTERY STREET
SAN FRANCISCO, CA 94111

Caltrans now has a web site! To get to the web site, go to: http://www.dot.ca.gov

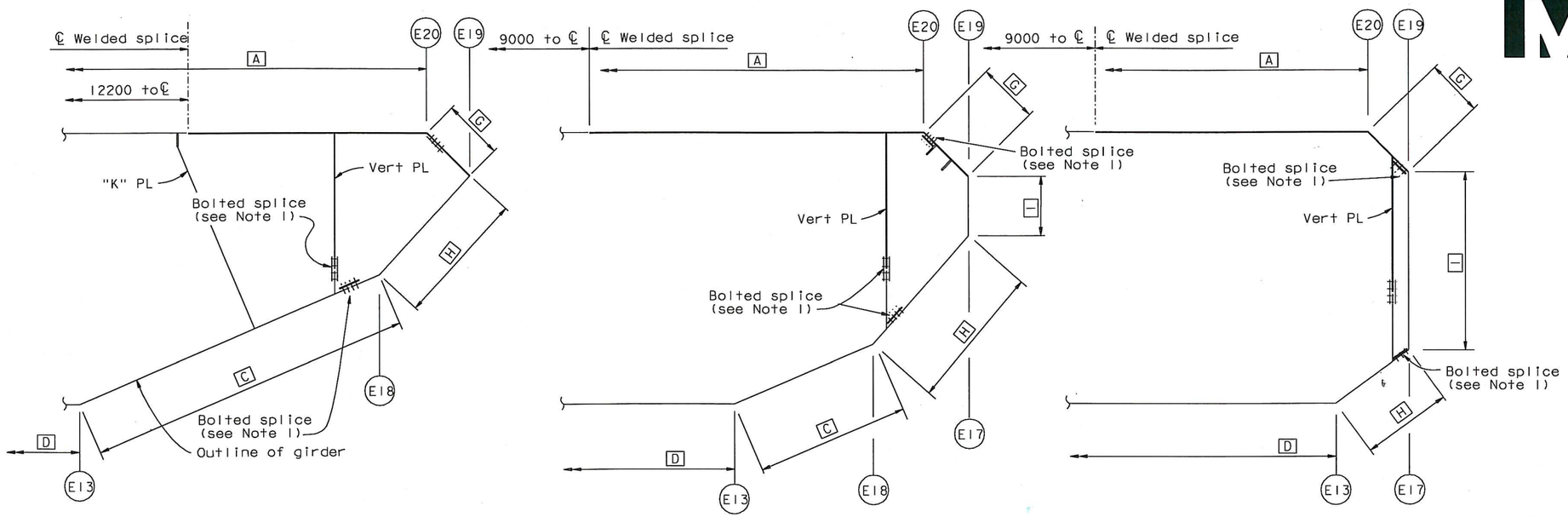

SECTION B-B

SECTION C-C

SECTION D-D

GIRDER SECTIONS (SCHEMATIC)

NTS

LEGEND FOR GIRDER PLATE SCHEMATIC:

—— Actual girder plate (main)

—— Actual girder plate (Closure)

NOTES:

1. Splice locations and patterns are shown for information only. Contractor shall be responsible for the design and detailing of splices suitable to his erection methods. All splices shall develop the full capacity of the connected parts, except for architectural splices shown in the plans. For design criteria see the "General Notes" sheets. The Contractor shall submit his design details for review and approval by the Engineer.

   ⚠ Acceptable splice details are shown on "East Anchorage Construction Details No. 3" sheet.

2. During field welding the cable strands shall be protected to the satisfaction of the Engineer.
3. For connections containing both welded and bolted parts, bolts shall be designed as "slip critical"
4. Stiffener across web splice may be installed in the field or spliced at web splice location.

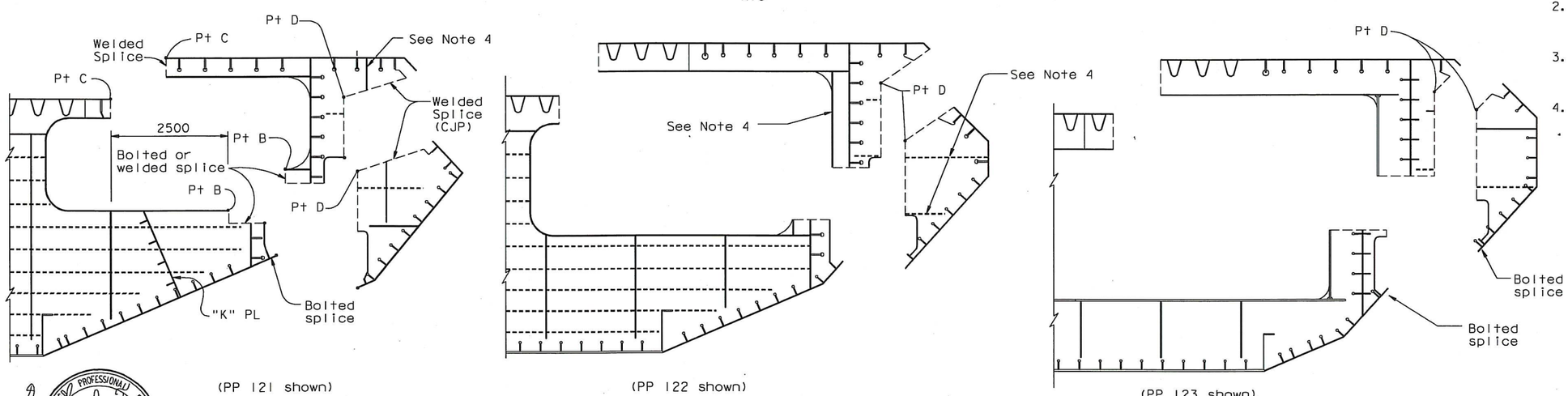

(PP 121 shown)
SECTION B'-B'

(PP 122 shown)
SECTION C'-C'

(PP 123 shown)
SECTION D'-D'

FLOORBEAM SECTIONS

Daniel J. Turner
REGISTERED PROFESSIONAL ENGINEER Daniel J. Turner No. C 65033 Exp. 06/30/13 CIVIL STATE OF CALIFORNIA

FOR REVISIONS ONLY

CONTRACT CHANGE ORDER NO. 87
SHEET 114 OF 115

REQUESTS FOR INFORMATION NOT ADDRESSED IN THIS CCO REMAIN IN FORCE

ALL DIMENSIONS ARE IN MILLIMETERS UNLESS OTHERWISE SHOWN

R. Vallizadeh/V. Toan/Y.L./W.L./F.C.
DESIGN OVERSIGHT
Roya Vallizadeh / Vong P. Toan / Y. Liu
SIGN OFF DATE 09/01/11

MARK	DATE	DESCRIPTIONS	BY	CH'D	CCO#
1	09/01/11	EAST END OBG	DT	GB	87

REVISIONS

DESIGN	BY G. Baker	CHECKED	C. Seim
DETAILS	BY M. Gulyas	CHECKED	C. Mibelli
QUANTITIES	BY M. Gulyas	CHECKED	C. Mibelli

PREPARED FOR THE STATE OF CALIFORNIA DEPARTMENT OF TRANSPORTATION

R. Manzanarez
PROJECT ENGINEER

BRIDGE NO. 34-0006L/R
KILOMETER POST 13.2/13.9

SAN FRANCISCO OAKLAND BAY BRIDGE
EAST SPAN SEISMIC SAFETY PROJECT
SELF-ANCHORED SUSPENSION BRIDGE
(SUPERSTRUCTURE & TOWER)

EAST ANCHORAGE CONSTRUCTION DETAILS NO. 2

Rev. Date: 5-18-98

ORIGINAL SCALE IN MILLIMETERS FOR REDUCED PLANS 0 10 20 30 40 50 60 70 80 90 100

CU 04
EA 0120F1

DISREGARD PRINTS BEARING EARLIER REVISION DATES

REVISION DATES (PRELIMINARY STAGE ONLY) 01/15/99 05/17/99 08/07/99 05/17/01 04/08/02 07/09/02 12/19/02

SHEET 569R1 OF

FILE => I:\bb\04-012001\sas\contract plans and cco\cco\cco#87\1-original 09-01-11\dgn\akcns13.dgn

100 % PS&E

USERNAME => ALishansky DATE PLOTTED => 30 AUG 2011 TIME PLOTTED => 14:35:23

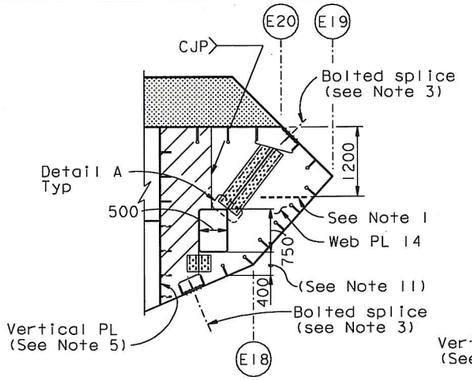

SPLICE AT PP 120

("E" Line Shown, "W" Line Similar)
1:50

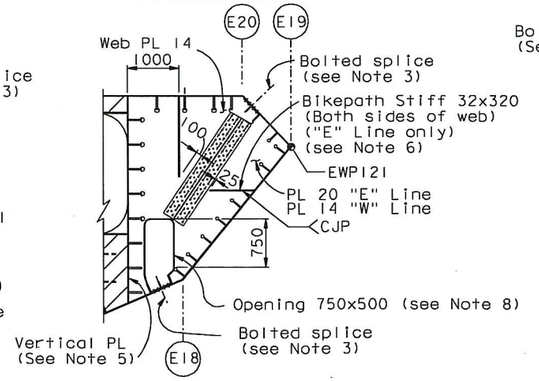

SPLICE AT PP 121

("E" Line Shown, "W" Line Similar)
1:50

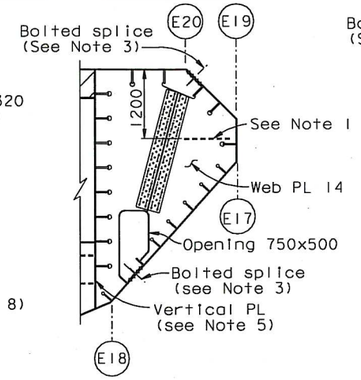

SPLICE AT PP 122

("E" Line Shown, "W" Line Similar)
1:50

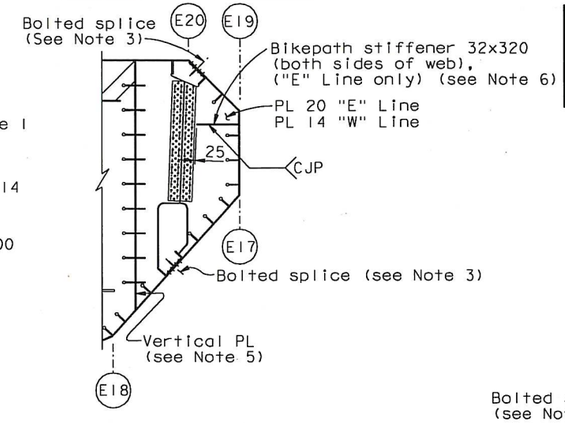

SPLICE AT PP 123

("E" Line Shown, "W" Line Similar)
1:50

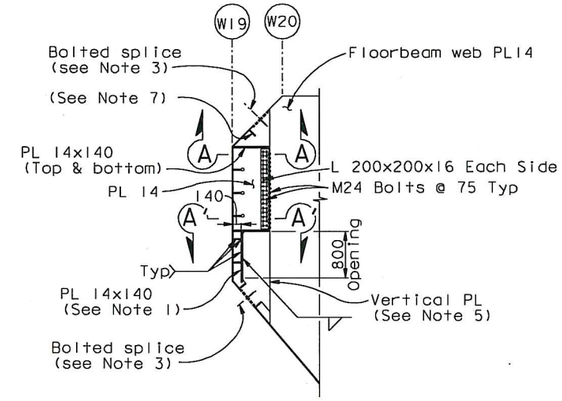

PP 124 ("W" Line)

1:50

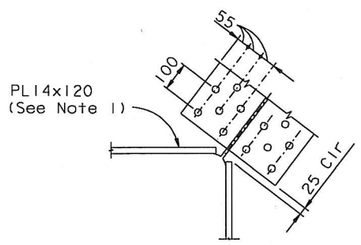

DETAIL A

1:10

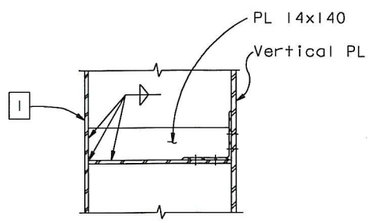

SECTION A-A

(Section A'-A' Similar)
1:10

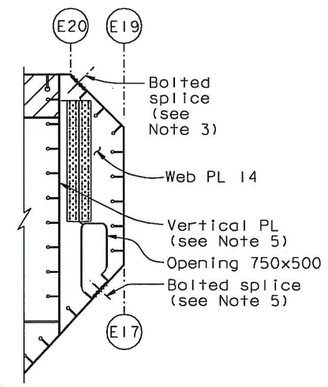

PP 124 ("E" Line)

1:50

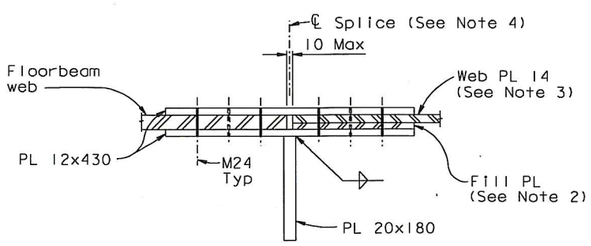

TYPICAL WEB SPLICE DETAIL

1:5

NOTES:

1. For stiffener termination details, see "Typical Stiffener Transition Detail" on "Typical Floorbeam Details No. 4" sheet.
2. Use fill plate as required when webs do not align.
3. Girder faces G, H and I are architectural from PP118 to PP125. For bolted splices see "Girder At East Transition Details No. 3" sheet. For splice locations see "Girder At East Transition Nos. 11 to 14" sheets.
4. Splice ℄ may be adjusted.
5. For "K" plate and vertical plate details, see "Girder At East Transition Details" sheets.
6. Bikepath bearing stiffeners shall be welded to girder plate using PJP with 80% penetration welds. Girder stiffener plates shall be coped on either side of bikepath stiffener. Bikepath stiffeners shall align with the bottom flanges of the bikepath cantilever beams at PP121, PP123 and PP125. For locations of bikepath cantilever beams, see "Bikepath Details" sheets.
7. Terminate stiffener as required to access splice.
8. Web opening similar to Detail E, "Girder at East Transition Details No. 3" sheet.

CONTRACT CHANGE ORDER NO. 87
SHEET 115 OF 115

REQUESTS FOR INFORMATION NOT ADDRESSED IN THIS CCO REMAIN IN FORCE

ALL DIMENSIONS ARE IN MILLIMETERS UNLESS OTHERWISE SHOWN

DIST.	COUNTY	ROUTE	KILOMETER POST TOTAL PROJECT	SHEET NO.	TOTAL SHEETS
04	SF	80	13.2/13.9	986S1	1204

REGISTERED ENGINEER - CIVIL
04-18-12
PLANS APPROVAL DATE

REGISTERED PROFESSIONAL ENGINEER Marwan N. Nader No. C 054426 Exp. 12/31/13 CIVIL STATE OF CALIFORNIA

The State of California or its officers or agents shall not be responsible for the accuracy or completeness of electronic copies of this plan sheet.

T.Y. LIN / MOFFATT & NICHOL
825 BATTERY STREET
SAN FRANCISCO, CA 94111

Caltrans now has a web site! To get to the web site, go to: http://www.dot.ca.gov

R. Valizadeh/V. Toan/Y.L./W.L./F.C.
DESIGN OVERSIGHT
Ryan Valizadeh / Vong P. Toan / Y. Liu
SIGN OFF DATE 04/18/12

MARK	DATE	DESCRIPTIONS	BY	CH'D	CCO#
0	04/18/12	EAST END OBG	GB	MN	87

REVISIONS

	BY	CHECKED
DESIGN	G. Baker	M. Nader
DETAILS	G. Baker	D. Turner
QUANTITIES	G. Baker	D. Turner

PREPARED FOR THE STATE OF CALIFORNIA DEPARTMENT OF TRANSPORTATION

R. Manzanarez
PROJECT ENGINEER

BRIDGE NO. 34-0006L/R
KILOMETER POST 13.2/13.9

SAN FRANCISCO OAKLAND BAY BRIDGE
EAST SPAN SEISMIC SAFETY PROJECT
SELF-ANCHORED SUSPENSION BRIDGE
(SUPERSTRUCTURE & TOWER)

EAST ANCHORAGE CONSTRUCTION DETAILS NO. 3

Rev. Date: 5-18-98

ORIGINAL SCALE IN MILLIMETERS FOR REDUCED PLANS 0 10 20 30 40 50 60 70 80 90 100

CU 04
EA 0120F1

DISREGARD PRINTS BEARING EARLIER REVISION DATES 04/18/12

REVISION DATES (PRELIMINARY STAGE ONLY)

SHEET 569S1 OF

FILE => I:\bb\04-012001\sas\contract plans and cco\cco\cco#87\temp\akcns13a.dgn

100 % PS&E

USERNAME => DWinrow DATE PLOTTED => 18 APR 2012 TIME PLOTTED => 11:34:23