DIST.	COUNTY	ROUTE	KILOMETER POST TOTAL PROJECT	SHEET NO.	TOTAL SHEETS
04	SF	80	13.2/13.9	682R1	1204

George Baker
REGISTERED ENGINEER - CIVIL
12-6-04
PLANS APPROVAL DATE

REGISTERED PROFESSIONAL ENGINEER George S. Baker No. C57112 Exp. 12/31/05 CIVIL STATE OF CALIFORNIA

The State of California or its officers or agents shall not be responsible for the accuracy or completeness of electronic copies of this plan sheet.

T.Y. LIN / MOFFATT & NICHOL
825 BATTERY STREET
SAN FRANCISCO, CA 94111

Caltrans now has a web site! To get to the web site, go to: http://www.dot.ca.gov

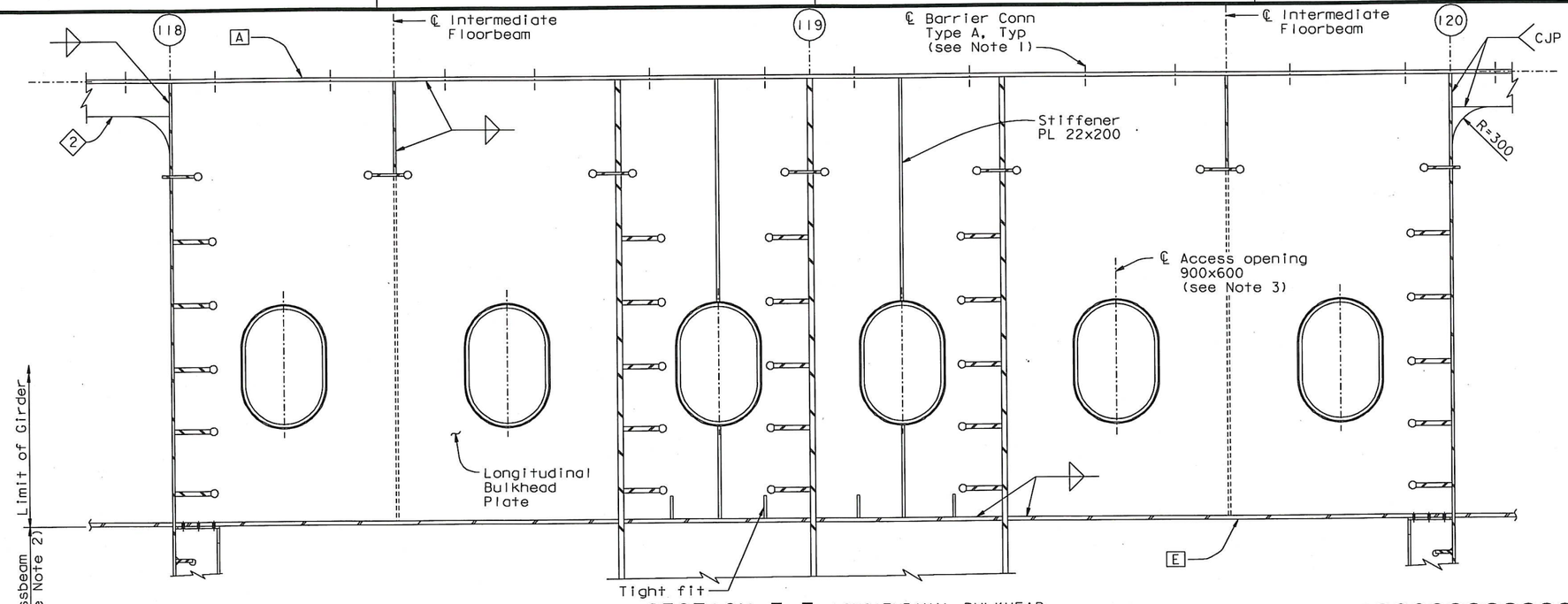

SECTION T-T LONGITUDINAL BULKHEAD AT PIER E2 CROSSBEAM

1:20

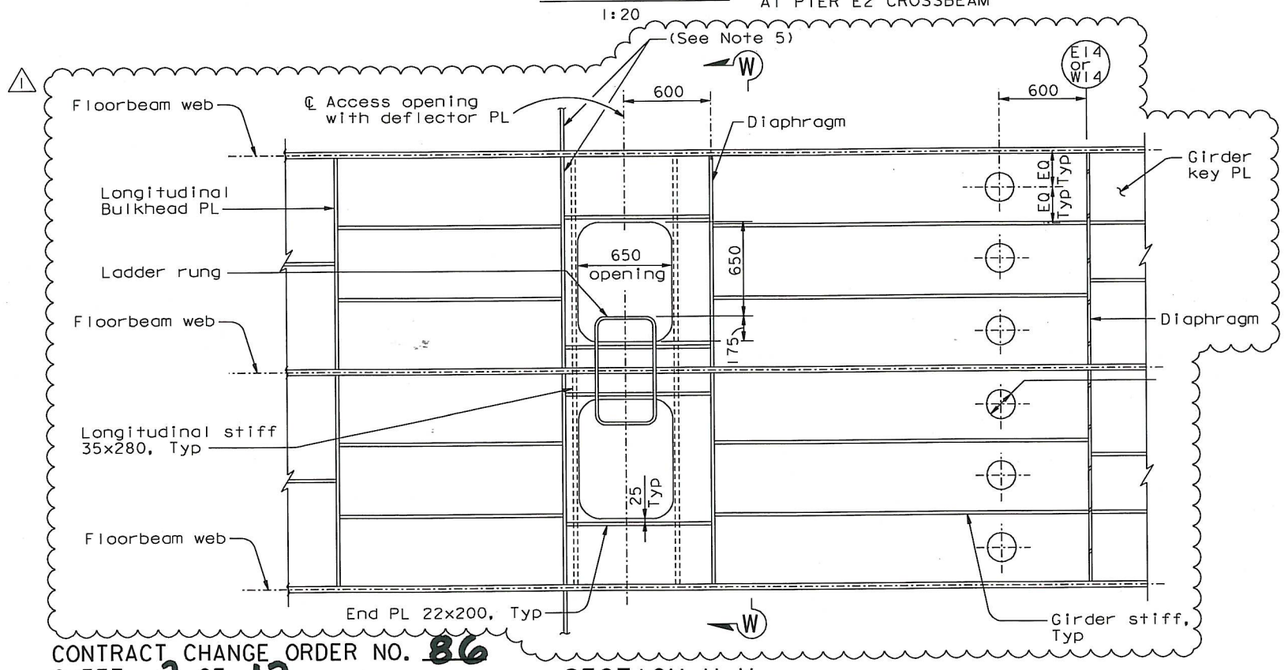

SECTION V-V

1:20

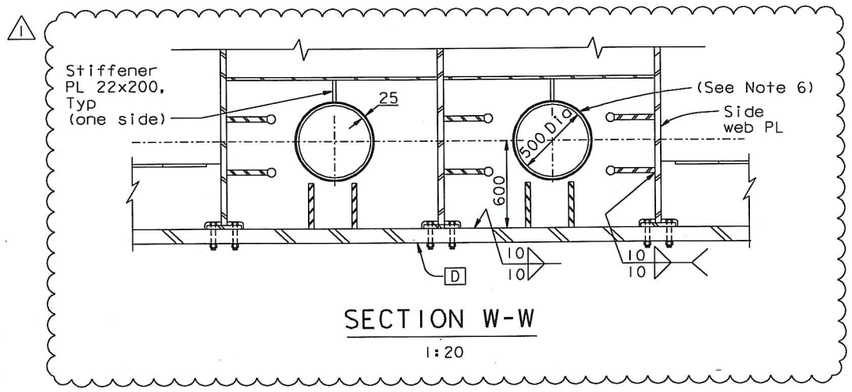

SECTION W-W

1:20

NOTES:

1. For details, see "Typical Girder Details No. 14" sheet.
2. For details, see "Crossbeam At Pier E2" sheets.
3. For opening details, see "Typical Girder Details No. 7" sheet.
4. For Section V-V opening details, see "Typical Girder Details No. 15" sheet.
5. Access opening stiffener shall align with the longitudinal stiffener.
6. For opening details not shown, see "Typical Girder Details No. 7" sheet.

REGISTERED PROFESSIONAL ENGINEER Daniel J. Turner No. C 65033 Exp. 06/30/11 CIVIL STATE OF CALIFORNIA

FOR REVISIONS ONLY

CONTRACT CHANGE ORDER NO. 86
SHEET 2 OF 12

REQUESTS FOR INFORMATION NOT ADDRESSED IN THIS CCO REMAIN IN FORCE

ALL DIMENSIONS ARE IN MILLIMETERS UNLESS OTHERWISE SHOWN

MARK	DATE	DESCRIPTIONS	BY	CH'D	CCO#
1	11/05/10	PP119 ACCESS & PP125 PLATES	GB	DT	86

REVISIONS

R. Vaziazadeh/V. Toan/Y.L./W.L./F.C.
DESIGN OVERSIGHT
SIGN OFF DATE 11/09/10

Rev. Date: 5-18-98

	BY	CHECKED	
DESIGN	G. Baker	P. Ritchie	
DETAILS	C. Mauch	T. McMeans	
QUANTITIES	D. Turner	M. Roberts	

PREPARED FOR THE STATE OF CALIFORNIA DEPARTMENT OF TRANSPORTATION

R. Manzanarez
PROJECT ENGINEER

CU 04
EA 0120F1

BRIDGE NO. 34-0006L/R
KILOMETER POST 13.2/13.9

DISREGARD PRINTS BEARING EARLIER REVISION DATES

REVISION DATES (PRELIMINARY STAGE ONLY): 05/15/99 08/02/99 05/31/01 01/08/02 07/01/02 12/18/02 11/23/05 12/07/05

SHEET 265R1 OF

ORIGINAL SCALE IN MILLIMETERS FOR REDUCED PLANS 0 10 20 30 40 50 60 70 80 90 100

SAN FRANCISCO OAKLAND BAY BRIDGE
EAST SPAN SEISMIC SAFETY PROJECT
SELF-ANCHORED SUSPENSION BRIDGE
(SUPERSTRUCTURE & TOWER)

GIRDER AT PIER E2 NO. 9

100 % PS&E

USERNAME => DWinrow DATE PLOTTED => 05 NOV 2010 TIME PLOTTED => 14:00:55

FILE => L:\BB\04-012001\SAS\Contract Plans and CCO\CCO\CCO#86\1-Original 11-05-10\DGN\aggdd14.dgn

Caltrans now has a web site! To get to the web site, go to: http://www.dot.ca.gov

DIST.	COUNTY	ROUTE	KILOMETER POST TOTAL PROJECT	SHEET NO.	TOTAL SHEETS
04	SF	80	13.2/13.9	694R2	1204

Caltrans Metric

George Baker
REGISTERED ENGINEER - CIVIL
12-6-04
PLANS APPROVAL DATE

REGISTERED PROFESSIONAL ENGINEER George S. Baker No. C57112 Exp. 12/31/05 CIVIL STATE OF CALIFORNIA

The State of California or its officers or agents shall not be responsible for the accuracy or completeness of electronic copies of this plan sheet.

T.Y. LIN / MOFFATT & NICHOL
825 BATTERY STREET
SAN FRANCISCO, CA 94111

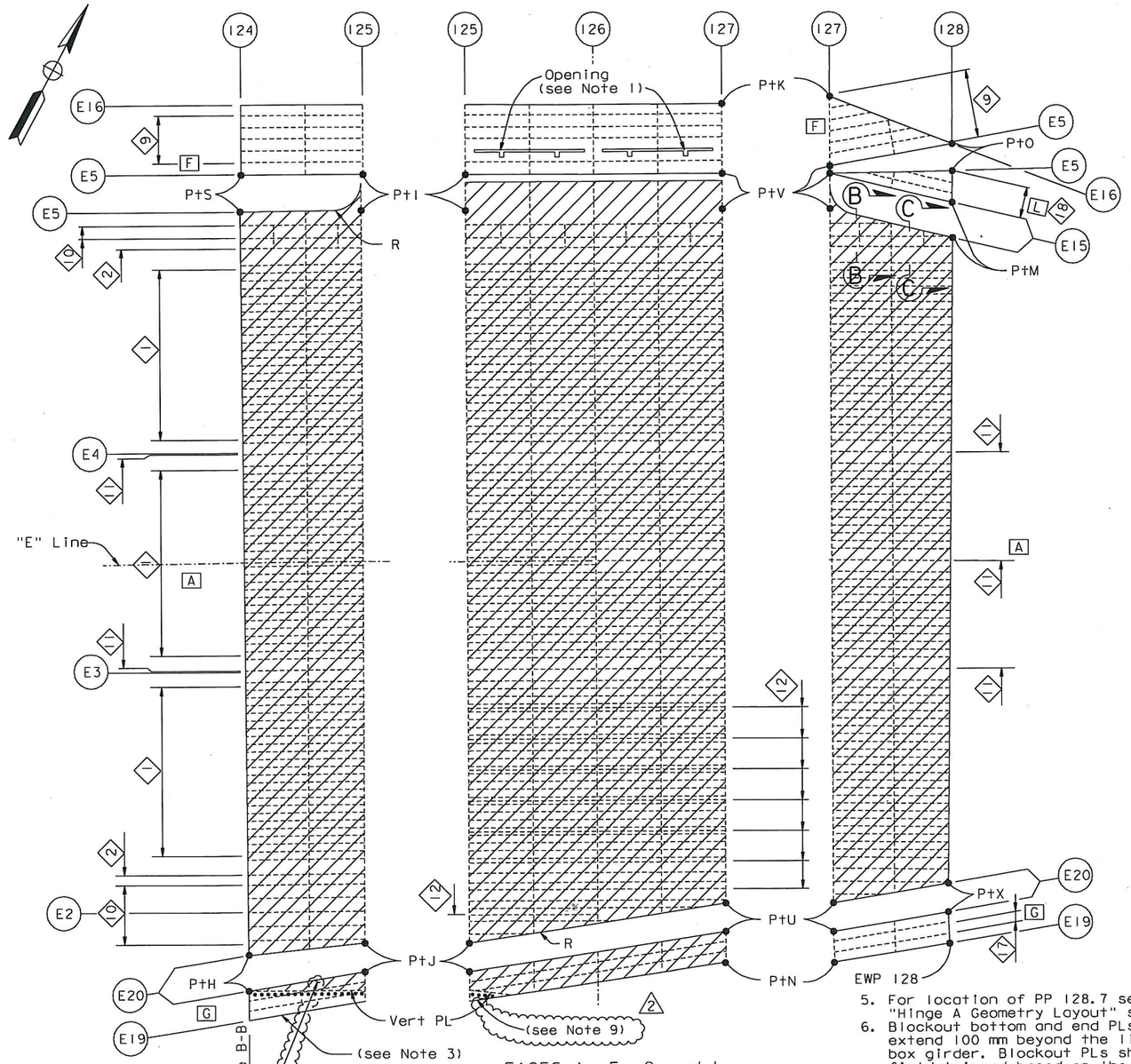

FACES A, F, G and L
("E" LINE SHOWN, "W" LINE SIMILAR)

TOP GIRDER FACE LAYOUT

1:100

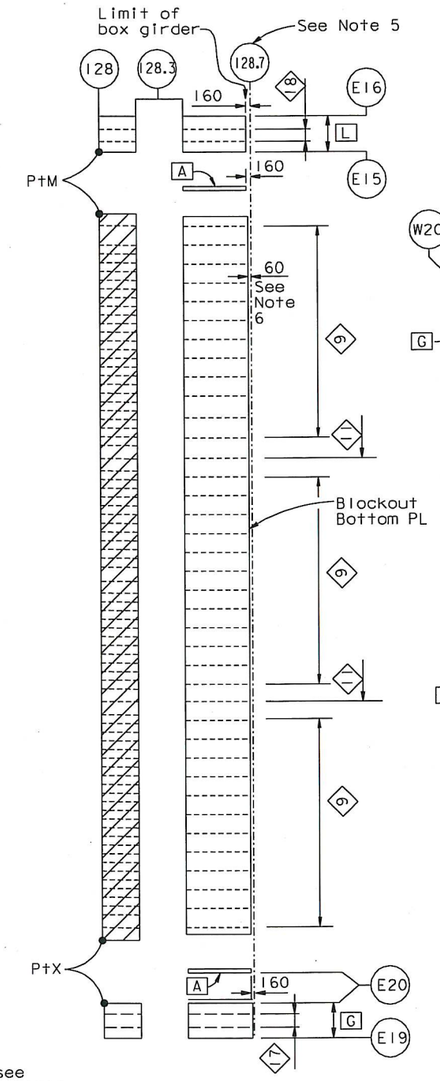

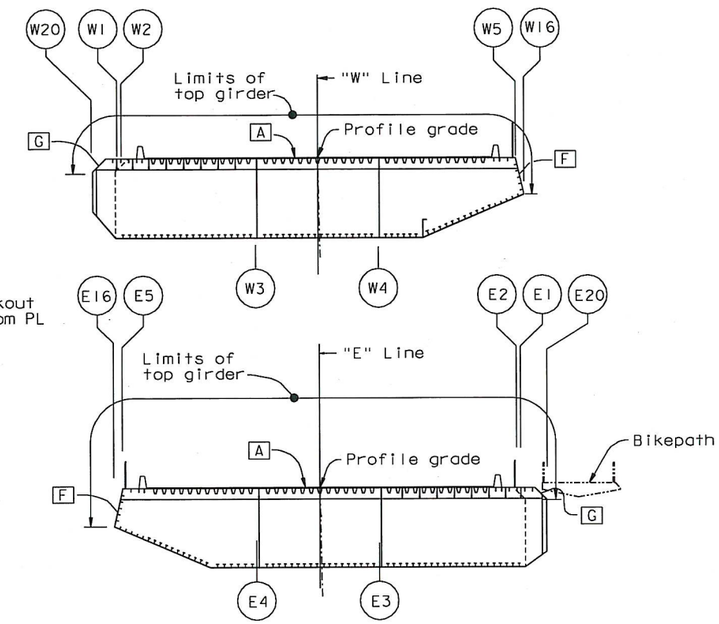

FACE KEY SECTION

1:200

LEGEND:

- A — Girder face designation A
- Stiffener type 2, 9, 10, 11 or other stiffener
- Stiffener type 1 leg
- Floorbeam unless noted otherwise
- Stiffener type 1 designation
- R - Radius (see Note 2)
- Bolted splice (see Note 3)
- "Indicates SPCM shell plate"
- see Note 4

NOTES:

1. For opening details in girder plate F, see "Crossbeam At East Anchorage" sheets.
2. Plate edges identified with "R" are curved. All other plate edges are straight.
3. For PP124 to 125 the indicated portion of G is an architectural housing. For bolted splice details, see "Girder At East Transition Details No.3" sheet. Housing shall be installed after full cable dead load force is applied to the box girder.
4. Deleted.
5. For location of PP 128.7 see "Hinge A Geometry Layout" sheets.
6. Blockout bottom and end PLs shall extend 100 mm beyond the limit of box girder. Blockout PLs shall be field-trimmed based on the as-built bridge as directed by the Engineer.
7. For Sections B-B & C-C, see "Girder at East Transition No.12A" sheet.
8. Plates inboard of the architectural splice shall be SPCM. Thickness of SPCM plate shall be taken from "Girder at East Transition Details No.3A" sheet.
9. Thickness of non-SPCM plate shall be taken from "Girder at East Transition Details No.3A" sheet.

ALL DIMENSIONS ARE IN MILLIMETERS UNLESS OTHERWISE SHOWN

REGISTERED PROFESSIONAL ENGINEER Marwan N. Nader No. C 054426 Exp. 12/31/11 CIVIL STATE OF CALIFORNIA

FOR REVISIONS ONLY

CONTRACT CHANGE ORDER NO. 86
SHEET 3 OF 12

REQUESTS FOR INFORMATION NOT ADDRESSED IN THIS CCO REMAIN IN FORCE

MARK	DATE	DESCRIPTIONS	BY	CH'D	CCO#
2	11/05/10	PP119 ACCESS & PP125 PLATES	MN	GB	86
1	04/09/10	HINGE A MODIFICATIONS	MN	GB	120

REVISIONS

R. Valizadeh/V. Taan/Y.L./W.L./F.C.
DESIGN OVERSIGHT
SIGN OFF DATE 11/05/10

DESIGN	BY G. Baker	CHECKED	P. Ritchie
DETAILS	BY M. Gulyas	CHECKED	T. McMeans
QUANTITIES	BY G. Baker	CHECKED	M. Roberts

PREPARED FOR THE STATE OF CALIFORNIA DEPARTMENT OF TRANSPORTATION

R. Manzanarez
PROJECT ENGINEER

BRIDGE NO. 34-0006L/R
KILOMETER POST 13.2/13.9

SAN FRANCISCO OAKLAND BAY BRIDGE
EAST SPAN SEISMIC SAFETY PROJECT
SELF-ANCHORED SUSPENSION BRIDGE
(SUPERSTRUCTURE & TOWER)

GIRDER AT EAST TRANSITION NO. 12

Rev. Date: 5-18-98

ORIGINAL SCALE IN MILLIMETERS FOR REDUCED PLANS 0 10 20 30 40 50 60 70 80 90 100

CU 04
EA 0120F1

DISREGARD PRINTS BEARING EARLIER REVISION DATES

REVISION DATES (PRELIMINARY STAGE ONLY) 05/24/01 04/08/02 07/09/02 12/18/02 05/18/03 09/06/04

SHEET 277R2 OF

FILE => I:\bb\04-01200I\sas\contract plans and cco\cco\cco#86\1-original 11-05-10\dgn\agegd08-r1.dgn

USERNAME => DWinrow DATE PLOTTED => 05 NOV 2010 TIME PLOTTED => 10:54:13

100 % PS&E

DIST.	COUNTY	ROUTE	KILOMETER POST TOTAL PROJECT	SHEET NO.	TOTAL SHEETS
04	SF	80	13.2/13.9	696R2	1204

Caltrans Metric

George Baker
REGISTERED ENGINEER - CIVIL

12-6-04
PLANS APPROVAL DATE

REGISTERED PROFESSIONAL ENGINEER George S. Baker No. C57112 Exp. 12/31/05 CIVIL STATE OF CALIFORNIA

The State of California or its officers or agents shall not be responsible for the accuracy or completeness of electronic copies of this plan sheet.

T.Y. LIN / MOFFATT & NICHOL
825 BATTERY STREET
SAN FRANCISCO, CA 94111

Caltrans now has a web site! To get to the web site, go to: http://www.dot.ca.gov

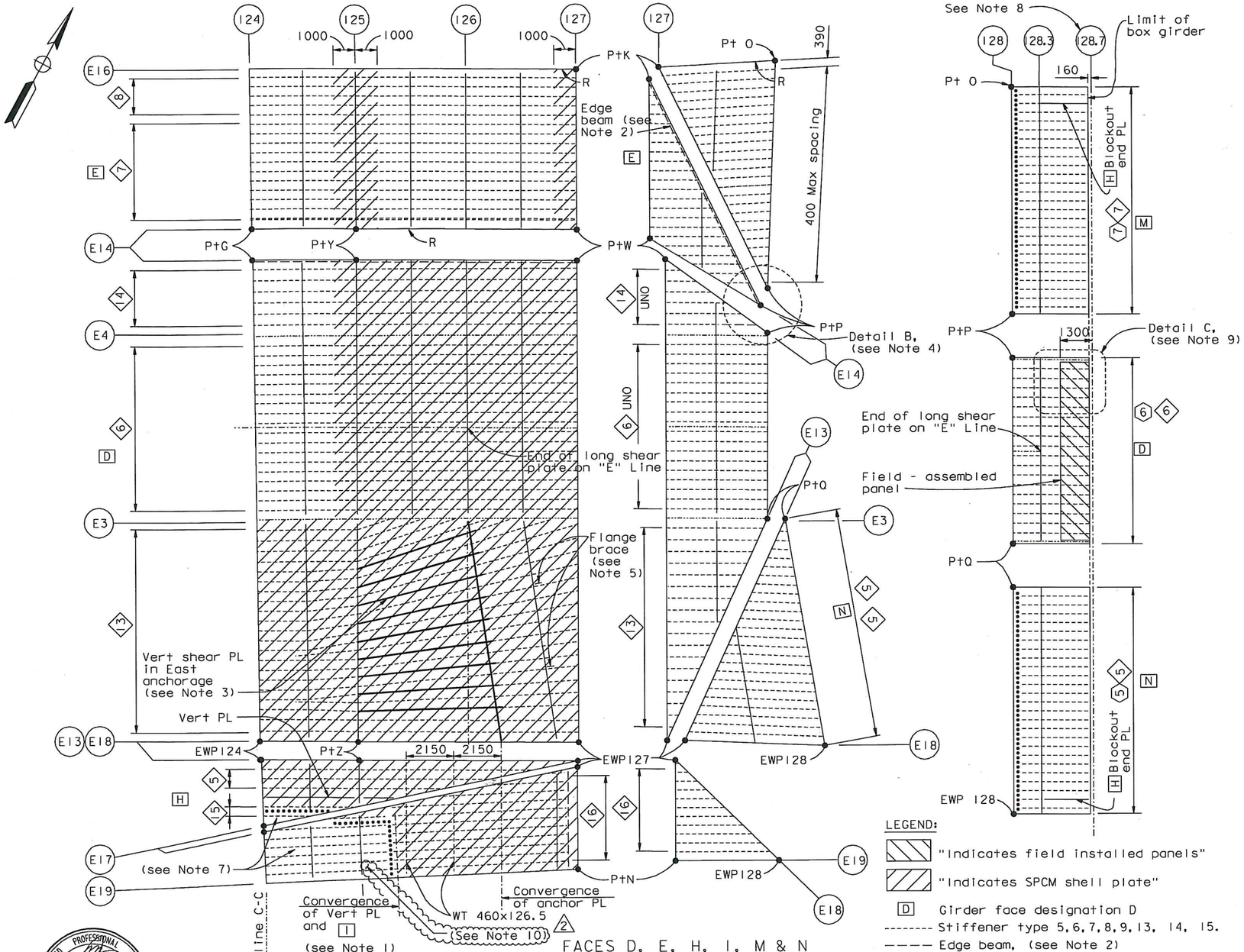

FACES D, E, H, I, M & N

("E" LINE SHOWN, "W" LINE SIMILAR)

BOTTOM GIRDER FACE LAYOUT

1:100

LEGEND:

- "Indicates field installed panels"
- "Indicates SPCM shell plate"
- D — Girder face designation D
- Stiffener type 5, 6, 7, 8, 9, 13, 14, 15.
- Edge beam, (see Note 2)
- Longitudinal shear plate type 2, UNO
- Bolted splice, (see Note 7)
- 5 — Stiffener type 5
- R - Radius
- Pt A - Point A

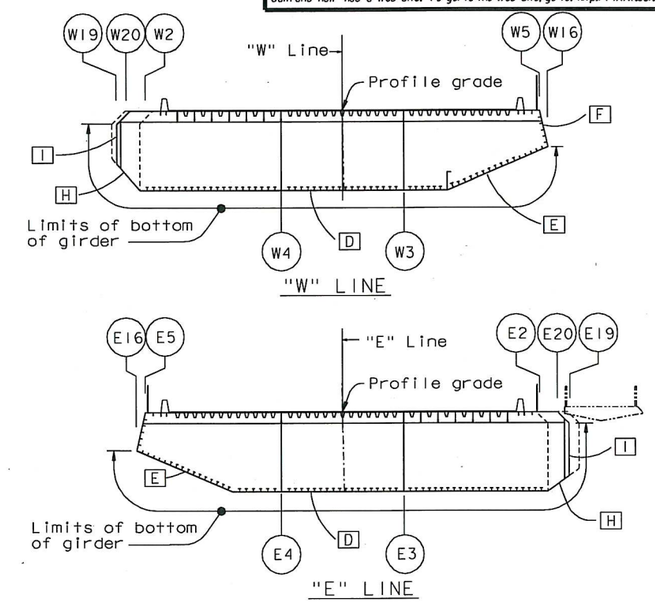

FACE KEY SECTION

1:200

NOTES:

1. For details of convergence of vertical plate and girder plate I, see "Girder At East Transition Details No.3" sheet.
2. Edge beam shall have same dimensions and details as longitudinal shear plate type 1 UNO. See "Typical Girder Details No.8" and "Typical Floorbeam Details No.5" sheets. For edge beam connection at PP128 see Detail B on "Girder At East Transition Details No.3" sheet.
3. For east anchorage details, see "East Cable Anchorage "E" Line Layout" sheets.
4. For Detail B, see "Girder At East Transition Details No.3" sheet.
5. For flange brace details, see "Floorbeam At East Transition" sheets.
6. Plate edges identified with "R" are curved. All other plate edges are straight.
7. For PP124 to 125.5 the indicated portions of H and I bounded by the bolted splices are architectural housings. For bolted splice details, see "Girder At East Transition Details No.3" sheet. Housing shall be installed after full cable dead load force is applied to the box girder.
8. For location of PP 128.7, see "Hinge A Geometry Layout" sheets.
9. For Detail C, see "Girder At East Transition Details No.5" sheet.
10. Thickness of non-SPCM plate shall be taken from PP122-PP125 column on Girder Plate Thickness Table, "Typical Girder Details No.1" sheet. (2)

ALL DIMENSIONS ARE IN MILLIMETERS UNLESS OTHERWISE SHOWN

REGISTERED PROFESSIONAL ENGINEER Marwan N. Nader No. C 054426 Exp. 12/31/11 CIVIL STATE OF CALIFORNIA

FOR REVISIONS ONLY

CONTRACT CHANGE ORDER NO. 86
SHEET 4 OF 12

REQUESTS FOR INFORMATION NOT ADDRESSED IN THIS CCO REMAIN IN FORCE

MARK	DATE	DESCRIPTIONS	BY	CH'D	CCO#
2	11/05/10	PP119 ACCESS & PP125 PLATES	MN	GB	86
1	04/09/10	HINGE A MODIFICATIONS	MN	GB	120

REVISIONS

R. Valizadeh/V. Toan/Y.L./W.L./F.C.
DESIGN OVERSIGHT
SIGN OFF DATE 11/05/10

Rev. Date: 5-18-98

	BY	CHECKED
DESIGN	G. Baker	P. Ritchie
DETAILS	M. Guiyas	T. McMeans
QUANTITIES	G. Baker	M. Roberts

PREPARED FOR THE STATE OF CALIFORNIA DEPARTMENT OF TRANSPORTATION

R. Manzanarez
PROJECT ENGINEER

BRIDGE NO. 34-0006L/R
KILOMETER POST 13.2/13.9

SAN FRANCISCO OAKLAND BAY BRIDGE
EAST SPAN SEISMIC SAFETY PROJECT
SELF-ANCHORED SUSPENSION BRIDGE
(SUPERSTRUCTURE & TOWER)

GIRDER AT EAST TRANSITION NO. 14

ORIGINAL SCALE IN MILLIMETERS FOR REDUCED PLANS 0 10 20 30 40 50 60 70 80 90 100

CU 04
EA 0120F1

DISREGARD PRINTS BEARING EARLIER REVISION DATES

REVISION DATES (PRELIMINARY STAGE ONLY) 08/28/99 05/24/01 01/08/02 07/09/02 12/19/02 05/16/03

SHEET 279R2 OF

FILE => I:\bb\04-012001\sas\contract plans and cco\cco\cco#86\1-original 11-05-10\dgn\agegd10.dgn

USERNAME => DWinrow DATE PLOTTED => 05 NOV 2010 TIME PLOTTED => 10:55:08

100 % PS&E

DIST.	COUNTY	ROUTE	KILOMETER POST TOTAL PROJECT	SHEET NO.	TOTAL SHEETS
04	SF	80	13.2/13.9	703R1	1204

Caltrans Metric

George Baker
REGISTERED ENGINEER - CIVIL
12-6-04
PLANS APPROVAL DATE

REGISTERED PROFESSIONAL ENGINEER George S. Baker No. C 57112 Exp. 12/31/05 CIVIL STATE OF CALIFORNIA

The State of California or its officers or agents shall not be responsible for the accuracy or completeness of electronic copies of this plan sheet.

T.Y. LIN / MOFFATT & NICHOL
825 BATTERY STREET
SAN FRANCISCO, CA 94111

Caltrans now has a web site! To get to the web site, go to: http://www.dot.ca.gov

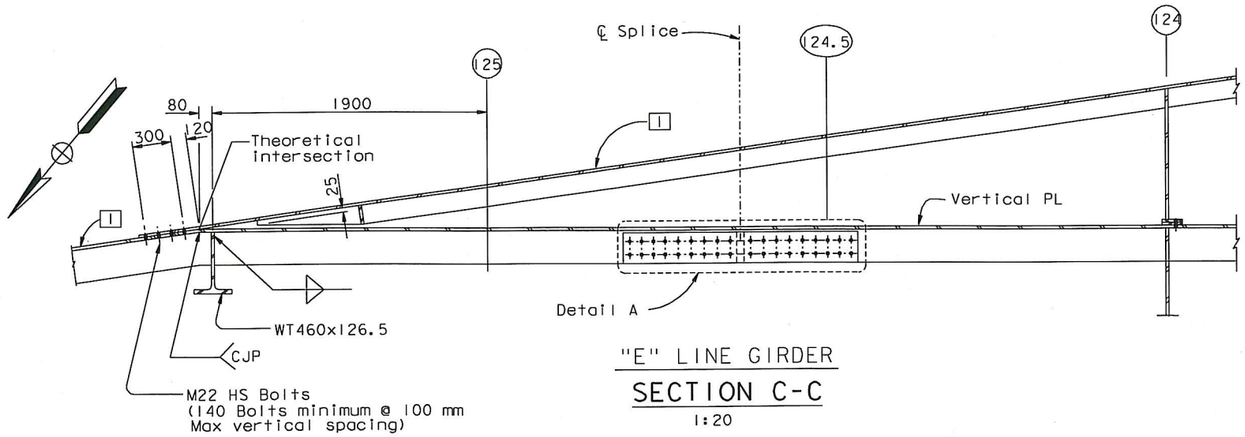

"E" LINE GIRDER
SECTION C-C
1:20

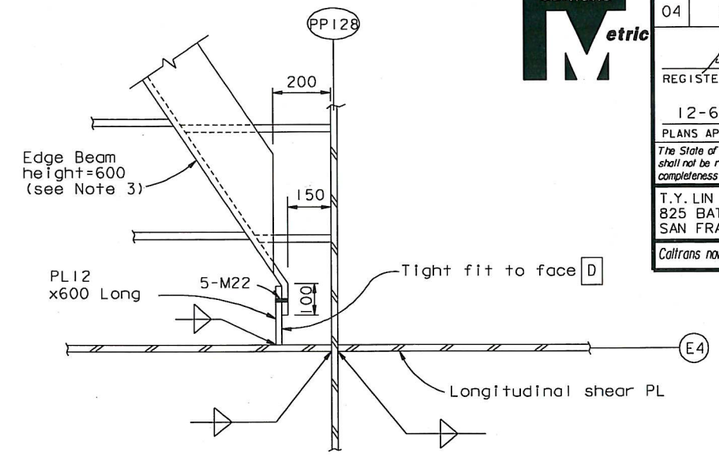

DETAIL B (see Note 1)
1:10

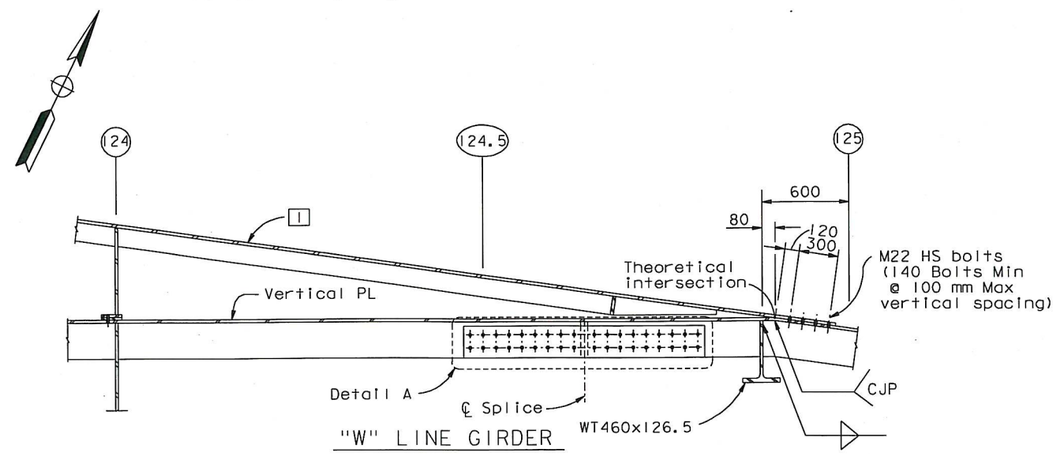

"W" LINE GIRDER
SECTION C-C (Similar)
1:20

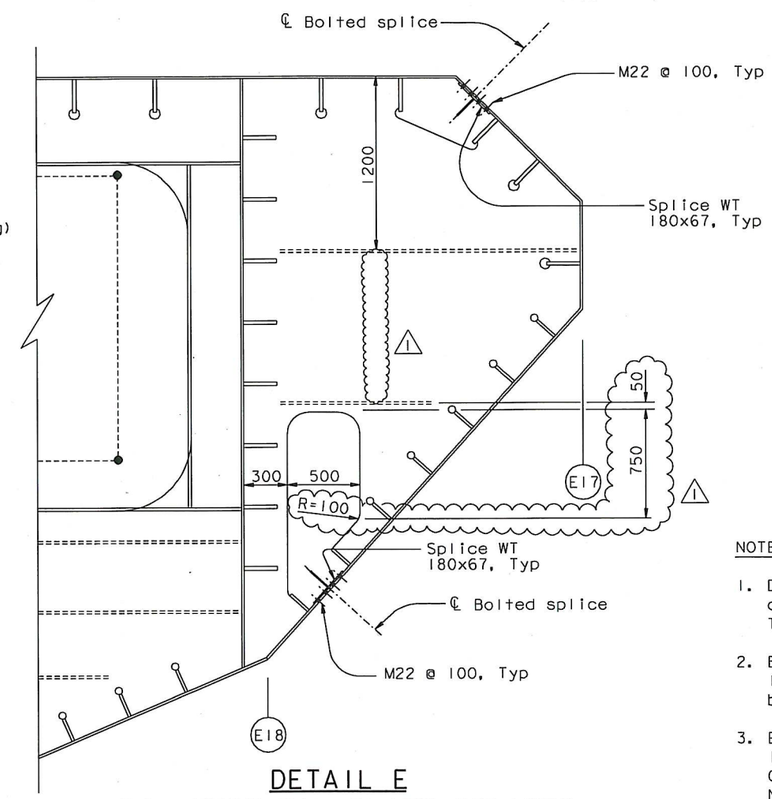

DETAIL E
ARCHITECTURAL PLATE SPLICES
1:20

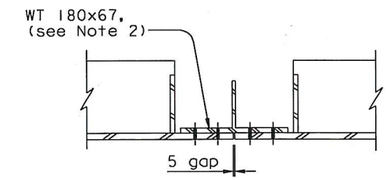

ARCHITECTURAL SPLICE DETAIL
1:10

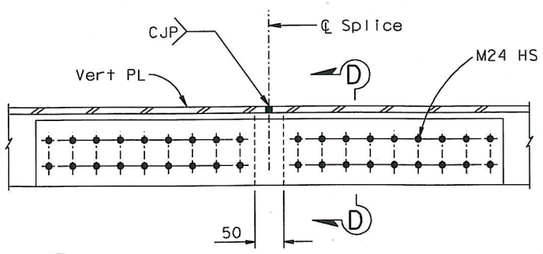

DETAIL A
1:10

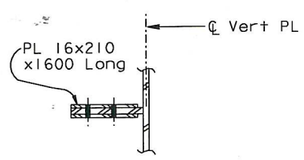

SECTION D-D
1:10

NOTES:

1. Detail B shown at E4; W4 similar. For location of Detail B, see Detail A on "Girder At East Transition No. 14" sheet.
2. Bolt holes in architectural splice plates shall be long slotted in the longitudinal direction of the bridge.
3. Edge beam shall have same dimensions and details as longitudinal shear plate type 1 UNO. See "Typical Girder Details No. 8" and "Typical Floorbeam Details No. 5" sheets.

REGISTERED PROFESSIONAL ENGINEER Daniel J. Turner No. C 65033 Exp. 06/30/11 CIVIL STATE OF CALIFORNIA

FOR REVISIONS ONLY

CONTRACT CHANGE ORDER NO. 86
SHEET 5 OF 12

REQUESTS FOR INFORMATION NOT ADDRESSED IN THIS CCO REMAIN IN FORCE

ALL DIMENSIONS ARE IN MILLIMETERS UNLESS OTHERWISE SHOWN

R. Valizadeh/V. Toan/Y.L./W.L./F.C.
DESIGN OVERSIGHT
SIGN OFF DATE 11/05/10

MARK	DATE	DESCRIPTIONS	BY	CH'D	CCO#
1	11/05/10	PP119 ACCESS & PP125 PLATES	GB	DT	86

REVISIONS

DESIGN	BY	G. Baker	CHECKED	P. Ritchie
DETAILS	BY	D. Veytsman	CHECKED	T. McMeans
QUANTITIES	BY	G. Baker	CHECKED	M. Roberts

PREPARED FOR THE STATE OF CALIFORNIA DEPARTMENT OF TRANSPORTATION

R. Manzanarez
PROJECT ENGINEER

BRIDGE NO. 34-0006L/R
KILOMETER POST 13.2/13.9

SAN FRANCISCO OAKLAND BAY BRIDGE
EAST SPAN SEISMIC SAFETY PROJECT
SELF-ANCHORED SUSPENSION BRIDGE
(SUPERSTRUCTURE & TOWER)

GIRDER AT EAST TRANSITION DETAILS NO. 3

Rev. Date: 5-18-98

ORIGINAL SCALE IN MILLIMETERS FOR REDUCED PLANS 0 10 20 30 40 50 60 70 80 90 100

CU 04
EA 0120F1

DISREGARD PRINTS BEARING EARLIER REVISION DATES — REVISION DATES (PRELIMINARY STAGE ONLY) 08/02/99 05/31/01 09/06/02 07/07/02 12/19/02

SHEET 286R1 OF

FILE => I:\bb\04-0120FI\sas\contract plans and cco\cco\cco#86\1-original 11-05-10\dgn\agand16.dgn

100% PS&E

USERNAME => DWinrow DATE PLOTTED => 05 NOV 2010 TIME PLOTTED => 10:55:52

DIST.	COUNTY	ROUTE	KILOMETER POST TOTAL PROJECT	SHEET NO.	TOTAL SHEETS
04	SF	80	13.2/13.9	708R1	1204

George Baker
REGISTERED ENGINEER - CIVIL
12-6-04
PLANS APPROVAL DATE

REGISTERED PROFESSIONAL ENGINEER George S. Baker No. C 57112 Exp. 12/31/05 CIVIL STATE OF CALIFORNIA

The State of California or its officers or agents shall not be responsible for the accuracy or completeness of electronic copies of this plan sheet.

T.Y. LIN / MOFFATT & NICHOL
825 BATTERY STREET
SAN FRANCISCO, CA 94111

Caltrans now has a web site! To get to the web site, go to: http://www.dot.ca.gov

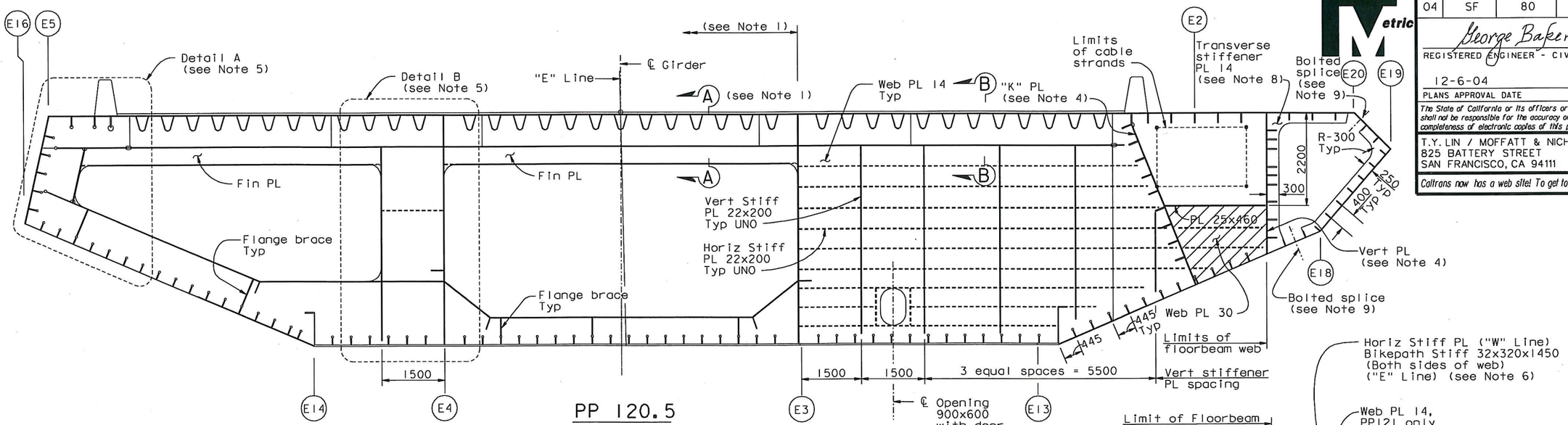

PP 120.5

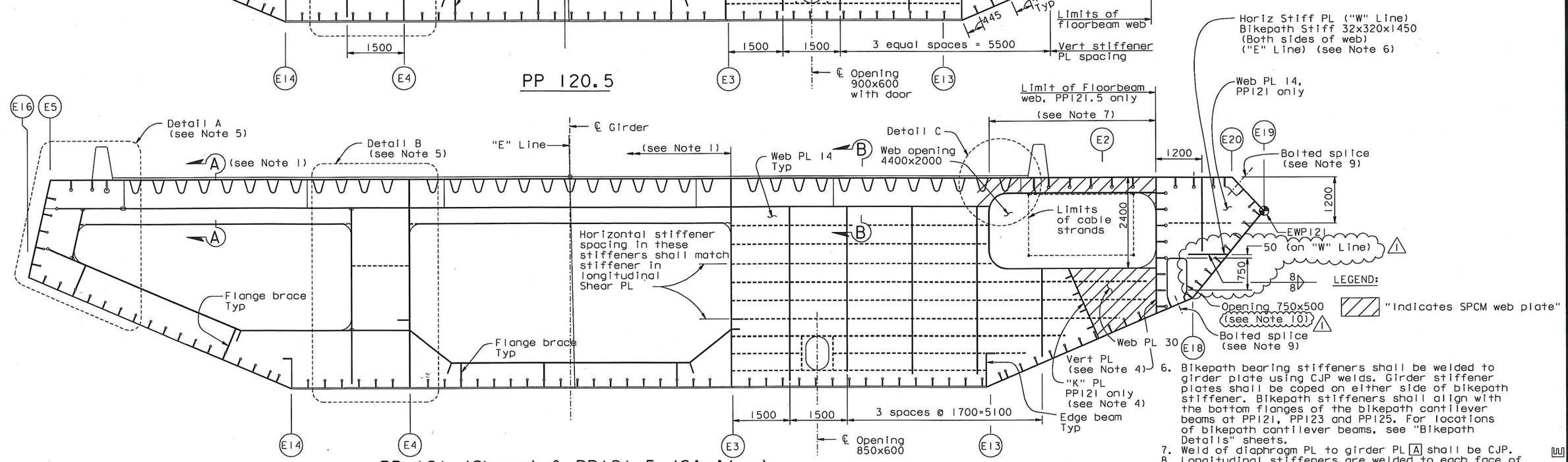

PP 121 (Shown) & PP121.5 (Similar) (see Note 2)
1:50

NOTES:

1. Floorbeams at PP120.5, PP121 and PP121.5 are similar to typical intermediate floorbeam type I from working lines E3 to E16. For these details, including Section A-A, see "Typical Floorbeam Details No.8" and "Typical Floorbeam Details No.9" sheets. For other details not shown, see "Typical Floorbeam Details" sheets. For girder dimensions not shown, see "Girder At East Transition" sheets.
2. "E" Line girder is shown, "W" Line girder is similar.
3. For saddle housing details, see "East Saddle Housing Details" sheet.
4. For "K" plate and vertical plate details, see "Girder At East Transition Details" sheets.
5. For Details A, B and C and Section B-B, see "Floorbeam At East Transition Details No.1" sheet.
6. Bikepath bearing stiffeners shall be welded to girder plate using CJP welds. Girder stiffener plates shall be coped on either side of bikepath stiffener. Bikepath stiffeners shall align with the bottom flanges of the bikepath cantilever beams at PP121, PP123 and PP125. For locations of bikepath cantilever beams, see "Bikepath Details" sheets.
7. Weld of diaphragm PL to girder PL [A] shall be CJP.
8. Longitudinal stiffeners are welded to each face of transverse stiffener plate. For details see stiffener type ⟨9⟩ on "Typical Girder Details No.5" sheet. Also provide tranverse stiffeners around openings at PP121.5, PP122.5, PP123.5 and PP124.5.
9. Girder faces G, H and I are architectural from PP118 to PP125. For bolted splices see "Girder At East Transition Details No.3" sheet. For splice locations see "Girder At East Transition Nos 11 to 14" sheet.
10. Web opening similar to Detail E, "Girder at East Transition Details No.3" sheet.

Daniel J. Turner
REGISTERED PROFESSIONAL ENGINEER Daniel J. Turner No. C 65033 Exp. 06/30/11 CIVIL STATE OF CALIFORNIA
FOR REVISIONS ONLY

CONTRACT CHANGE ORDER NO. 86
SHEET 6 OF 12

REQUESTS FOR INFORMATION NOT ADDRESSED IN THIS CCO REMAIN IN FORCE

ALL DIMENSIONS ARE IN MILLIMETERS UNLESS OTHERWISE SHOWN

MARK	DATE	DESCRIPTIONS	BY	CH'D	CCO#
1	11/05/10	PP119 ACCESS & PP125 PLATES	GB	DT	86

REVISIONS

R. Valizadeh/V. Toan/Y.L./W.L./F.C.
DESIGN OVERSIGHT
SIGN OFF DATE 11/05/10

Rev. Date: 5-18-98

DESIGN BY G. Baker CHECKED P. Ritchie
DETAILS BY S. Camo CHECKED T. McMeans
QUANTITIES BY C. Mauch CHECKED M. Roberts

PREPARED FOR THE STATE OF CALIFORNIA DEPARTMENT OF TRANSPORTATION

R. Manzanarez
PROJECT ENGINEER

BRIDGE NO. 34-0006L/R
KILOMETER POST 13.2/13.9

SAN FRANCISCO OAKLAND BAY BRIDGE
EAST SPAN SEISMIC SAFETY PROJECT
SELF-ANCHORED SUSPENSION BRIDGE
(SUPERSTRUCTURE & TOWER)

FLOORBEAM AT EAST TRANSITION NO. 4

ORIGINAL SCALE IN MILLIMETERS FOR REDUCED PLANS 0 10 20 30 40 50 60 70 80 90 100

CU 04
EA 0120F1

DISREGARD PRINTS BEARING EARLIER REVISION DATES

REVISION DATES (PRELIMINARY STAGE ONLY) 01/13/99 05/13/99 09/07/99 05/31/01 04/08/02 07/01/02 12/19/02

SHEET 291R1 OF

FILE => I:\bb\04-0120F1\sas\contract plans and cco\cco\cco#86\1-original 11-05-10\dgn\agefd07.dgn

USERNAME => DWinrow DATE PLOTTED => 05 NOV 2010 TIME PLOTTED => 10:56:57

100 % PS&E

DIST.	COUNTY	ROUTE	KILOMETER POST TOTAL PROJECT	SHEET NO.	TOTAL SHEETS
04	SF	80	13.2/13.9	709R1	1204

George Baker
REGISTERED ENGINEER - CIVIL

12-6-04
PLANS APPROVAL DATE

REGISTERED PROFESSIONAL ENGINEER George S. Baker No. C 57112 Exp. 12/31/05 CIVIL STATE OF CALIFORNIA

The State of California or its officers or agents shall not be responsible for the accuracy or completeness of electronic copies of this plan sheet.

T.Y. LIN / MOFFATT & NICHOL
825 BATTERY STREET
SAN FRANCISCO, CA 94111

Caltrans now has a web site! To get to the web site, go to: http://www.dot.ca.gov

Caltrans Metric

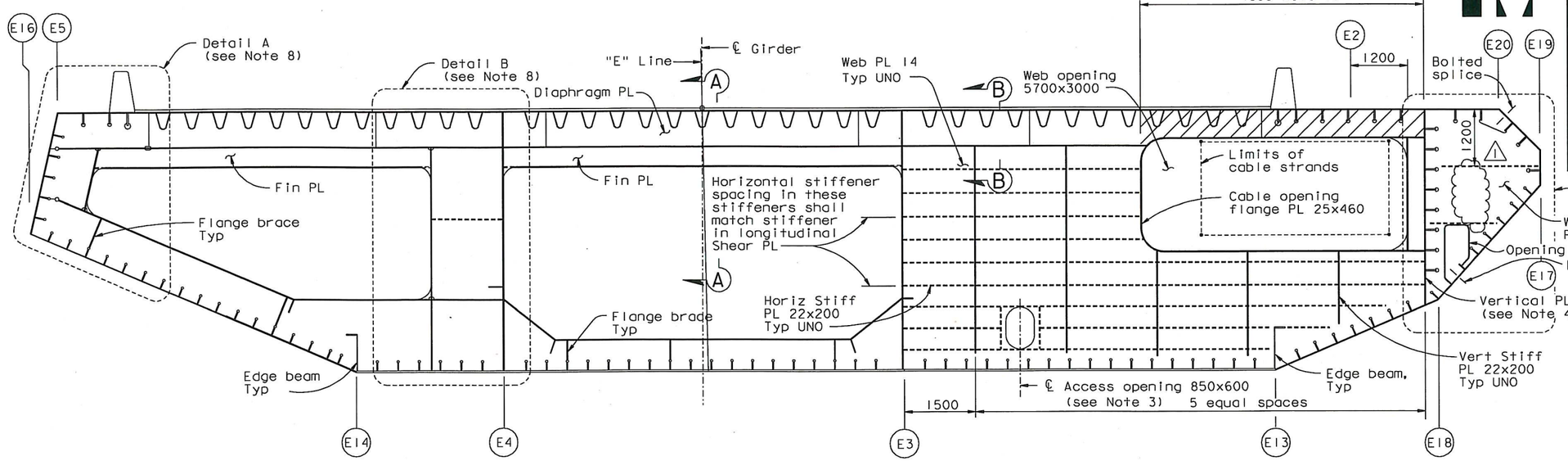

PP 122 (Shown) & PP 122.5 (Similar)

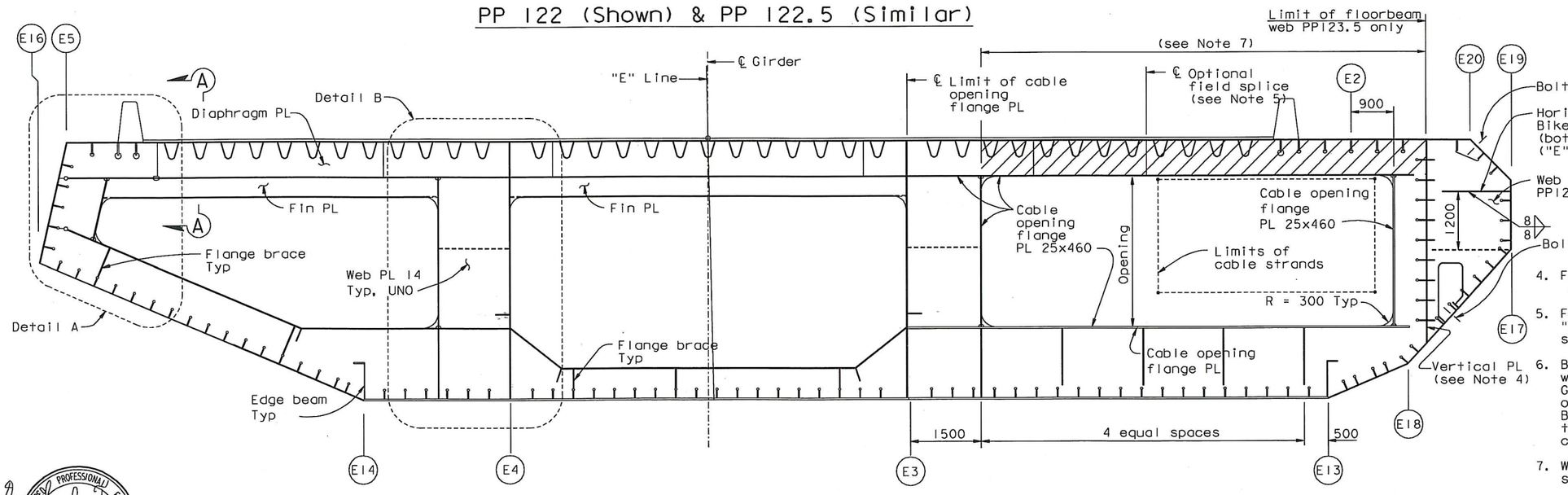

PP 123 (Shown) & PP 123.5 (Similar)

"E" LINE SECTION (see Note 2)
1:50

LEGEND:

"Indicates SPCM web plate"

NOTES:

1. For floorbeam details not shown and Section A-A, see "Typical Floorbeam Details" sheets. For dimensions not shown, see "Girder At East Transition" sheets.
2. "E" Line girder is shown, "W" Line girder is similar.
3. For access opening details not shown, see "Typical Girder Details No.7" sheet.
4. For vertical plate details, see "Girder At East Transition Details" sheets.
5. For optional field splice details, see "East Anchorage Construction Details" sheets.
6. Bikepath bearing stiffeners shall be welded to girder plate using CJP welds. Girder stiffener plates shall be coped on either side of bikepath stiffener. Bikepath stiffeners shall align with the bottom flanges of the bikepath cantilever beams at PP 123.
7. Weld of diaphragm PL to girder PL [A] shall be CJP.
8. For Details A, B and C, and Section B-B, see "Floorbeam At East Transition Details No.1" sheet.
9. For Detail E, see "Girder At East Transition Details No.3" sheet.

REGISTERED PROFESSIONAL ENGINEER Daniel J. Turner No. C 65033 Exp. 06/30/11 CIVIL STATE OF CALIFORNIA

FOR REVISIONS ONLY

CONTRACT CHANGE ORDER NO. 86
SHEET 7 OF 12

REQUESTS FOR INFORMATION NOT ADDRESSED IN THIS CCO REMAIN IN FORCE

ALL DIMENSIONS ARE IN MILLIMETERS UNLESS OTHERWISE SHOWN

R. Valizadeh/V. Toan/Y.L./W.L./F.C.
DESIGN OVERSIGHT
SIGN OFF DATE 11/05/10

MARK	DATE	DESCRIPTIONS	BY	CH'D	CCO#
1	11/05/10	PP119 ACCESS & PP125 PLATES	GB	DT	86

REVISIONS

DESIGN	BY G. Baker	CHECKED P. Ritchie	
DETAILS	BY S. Camo	CHECKED T. McMeans	
QUANTITIES	BY C. Mauch	CHECKED M. Roberts	

PREPARED FOR THE STATE OF CALIFORNIA DEPARTMENT OF TRANSPORTATION

R. Manzanarez
PROJECT ENGINEER

BRIDGE NO. 34-0006L/R
KILOMETER POST 13.2/13.9

SAN FRANCISCO OAKLAND BAY BRIDGE
EAST SPAN SEISMIC SAFETY PROJECT
SELF-ANCHORED SUSPENSION BRIDGE
(SUPERSTRUCTURE & TOWER)

FLOORBEAM AT EAST TRANSITION NO. 5

Rev. Date: 5-18-98

ORIGINAL SCALE IN MILLIMETERS FOR REDUCED PLANS 0 10 20 30 40 50 60 70 80 90 100

CU 04
EA 0120F1

DISREGARD PRINTS BEARING EARLIER REVISION DATES

REVISION DATES (PRELIMINARY STAGE ONLY) 05/25/99 08/26/99 05/31/01 01/08/02 01/09/02 12/19/02

SHEET 292R1 OF

FILE => I:\bb\04-01200\sas\contract plans and cco\cco\cco#86\1-original 11-05-10\dgn\agefd03.dgn

USERNAME => DWinrow DATE PLOTTED => 05 NOV 2010 TIME PLOTTED => 10:57:46

100 % PS&E

DIST.	COUNTY	ROUTE	KILOMETER POST TOTAL PROJECT	SHEET NO.	TOTAL SHEETS
04	SF	80	13.2/13.9	710R1	1204

George Baker
REGISTERED ENGINEER - CIVIL
12-6-04
PLANS APPROVAL DATE

REGISTERED PROFESSIONAL ENGINEER George S. Baker No. C 57112 Exp. 12/31/05 CIVIL STATE OF CALIFORNIA

The State of California or its officers or agents shall not be responsible for the accuracy or completeness of electronic copies of this plan sheet.

T.Y. LIN / MOFFATT & NICHOL
825 BATTERY STREET
SAN FRANCISCO, CA 94111

Caltrans now has a web site! To get to the web site, go to: http://www.dot.ca.gov

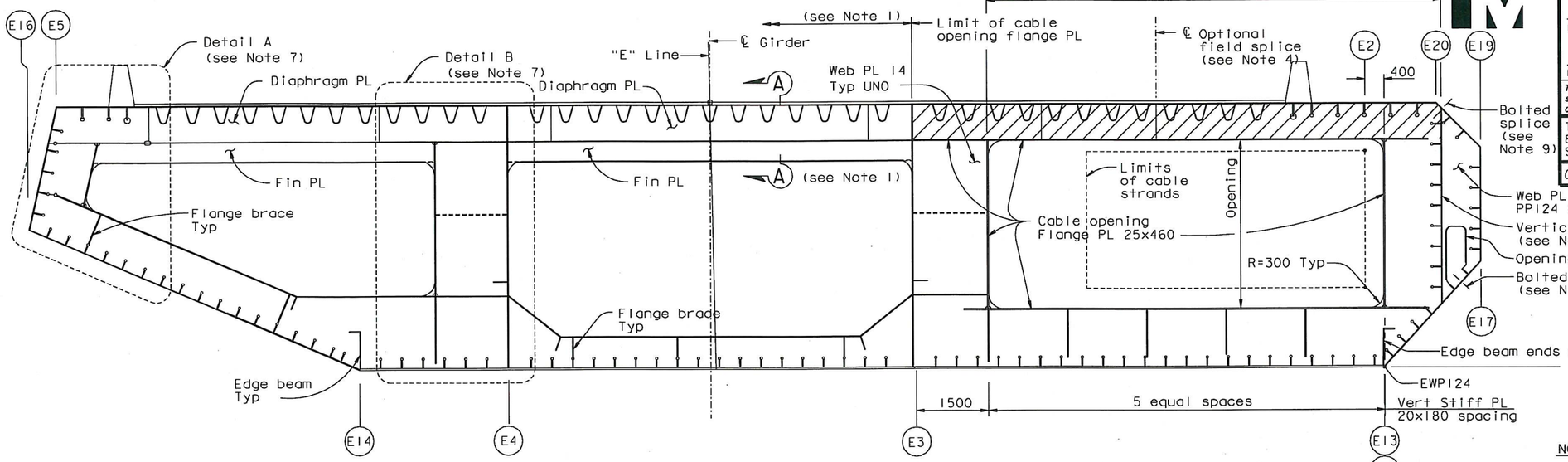

PP 124 (Shown) & PP 124.5 (Similar)

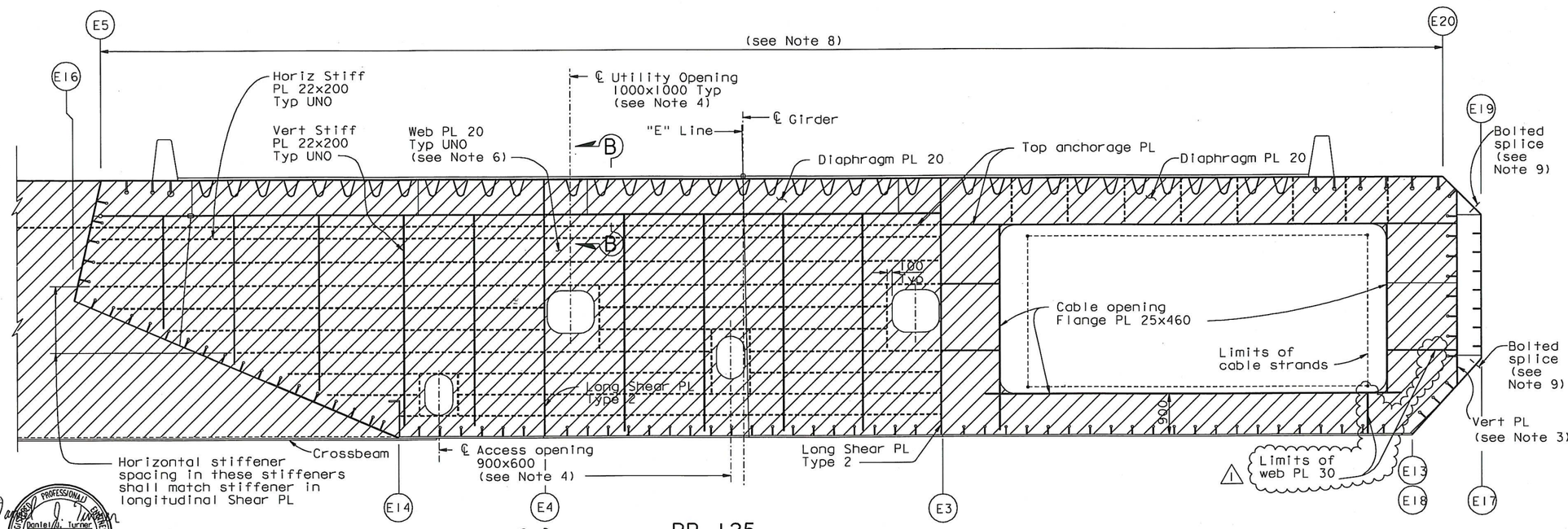

PP 125

"E" LINE SECTION (see Note 2)

1:50

LEGEND:

"Indicates SPCM web plate"

NOTES:

1. Floorbeams at PP124 and PP124.5 are similar to typical intermediate floorbeam type I from working lines E3 to E16. For these details, including Section A-A, see "Typical Floorbeam Details No. 8" and "Typical Floorbeam Details No. 9" sheets. For other details not shown, see "Typical Floorbeam Details" sheet. For girder dimensions not shown, see "Girder At East Transition" sheets.
2. "E" Line girder is shown, "W" Line girder is similar.
3. For vertical plate details, see "Girder At East Transition Details No. 2" sheet.
4. For details of access and utility openings not shown, see "Typical Girder Details No. 7" sheet.
5. For optional field splice details, see "East Anchorage Construction Details" sheets.
6. For floorbeam web plate details at PP125, see "Floorbeam At East Transition Details No. 2" sheet.
7. For Details A and B, and Section B-B, see "Floorbeam At East Transition Details No. 1" sheet.
8. Weld of diaphragm PL to girder PL [A] shall be CJP.
9. Girder faces G, H and I are architectural from PP118 to PP125. For bolted splices see "Girder At East Transition Details No. 3" sheet. For splice locations see "Girder At East Transitiion Nos 11 to 14" sheet.

REGISTERED PROFESSIONAL ENGINEER Daniel J. Turner No. C 65033 Exp. 06/30/11 CIVIL STATE OF CALIFORNIA

FOR REVISIONS ONLY

CONTRACT CHANGE ORDER NO. 86
SHEET 8 OF 12

REQUESTS FOR INFORMATION NOT ADDRESSED IN THIS CCO REMAIN IN FORCE

ALL DIMENSIONS ARE IN MILLIMETERS UNLESS OTHERWISE SHOWN

R. Valizadeh/V. Toan/Y.L./W.L./F.C.
DESIGN OVERSIGHT
SIGN OFF DATE 11/05/10
Rev. Date: 5-18-98

MARK	DATE	DESCRIPTIONS	BY	CH'D	CCO#
1	11/05/10	PP119 ACCESS & PP125 PLATES	GB	DT	86

REVISIONS

	BY	CHECKED
DESIGN	G. Baker	P. Ritchie
DETAILS	S. Camo	T. McMeans
QUANTITIES	C. Mauch	M. Roberts

PREPARED FOR THE STATE OF CALIFORNIA DEPARTMENT OF TRANSPORTATION

R. Manzanarez
PROJECT ENGINEER

BRIDGE NO. 34-0006L/R
KILOMETER POST 13.2/13.9

SAN FRANCISCO OAKLAND BAY BRIDGE
EAST SPAN SEISMIC SAFETY PROJECT
SELF-ANCHORED SUSPENSION BRIDGE
(SUPERSTRUCTURE & TOWER)

FLOORBEAM AT EAST TRANSITION NO. 6

ORIGINAL SCALE IN MILLIMETERS FOR REDUCED PLANS 0 10 20 30 40 50 60 70 80 90 100

CU 04
EA 0120F1

DISREGARD PRINTS BEARING EARLIER REVISION DATES

REVISION DATES (PRELIMINARY STAGE ONLY) 05/05/99 08/05/99 05/31/01 01/08/02 07/01/02 12/19/02

SHEET 293R1 OF

FILE => I:\bb\04-012001\sas\contract plans and cco\cco\cco#86\1-original 11-05-10\dgn\agefd04.dgn

100 % PS&E

USERNAME => DWTnrow DATE PLOTTED => 05 NOV 2010 TIME PLOTTED => 10:58:26

DIST.	COUNTY	ROUTE	KILOMETER POST TOTAL PROJECT	SHEET NO.	TOTAL SHEETS
04	SF	80	13.2/13.9	722R1	1204

George Baker
REGISTERED ENGINEER - CIVIL
12-6-04
PLANS APPROVAL DATE

REGISTERED PROFESSIONAL ENGINEER George S. Baker No. C57112 Exp. 12/31/05 CIVIL STATE OF CALIFORNIA

The State of California or its officers or agents shall not be responsible for the accuracy or completeness of electronic copies of this plan sheet.

T.Y. LIN / MOFFATT & NICHOL
825 BATTERY STREET
SAN FRANCISCO, CA 94111

Caltrans now has a web site! To get to the web site, go to: http://www.dot.ca.gov

Caltrans Metric

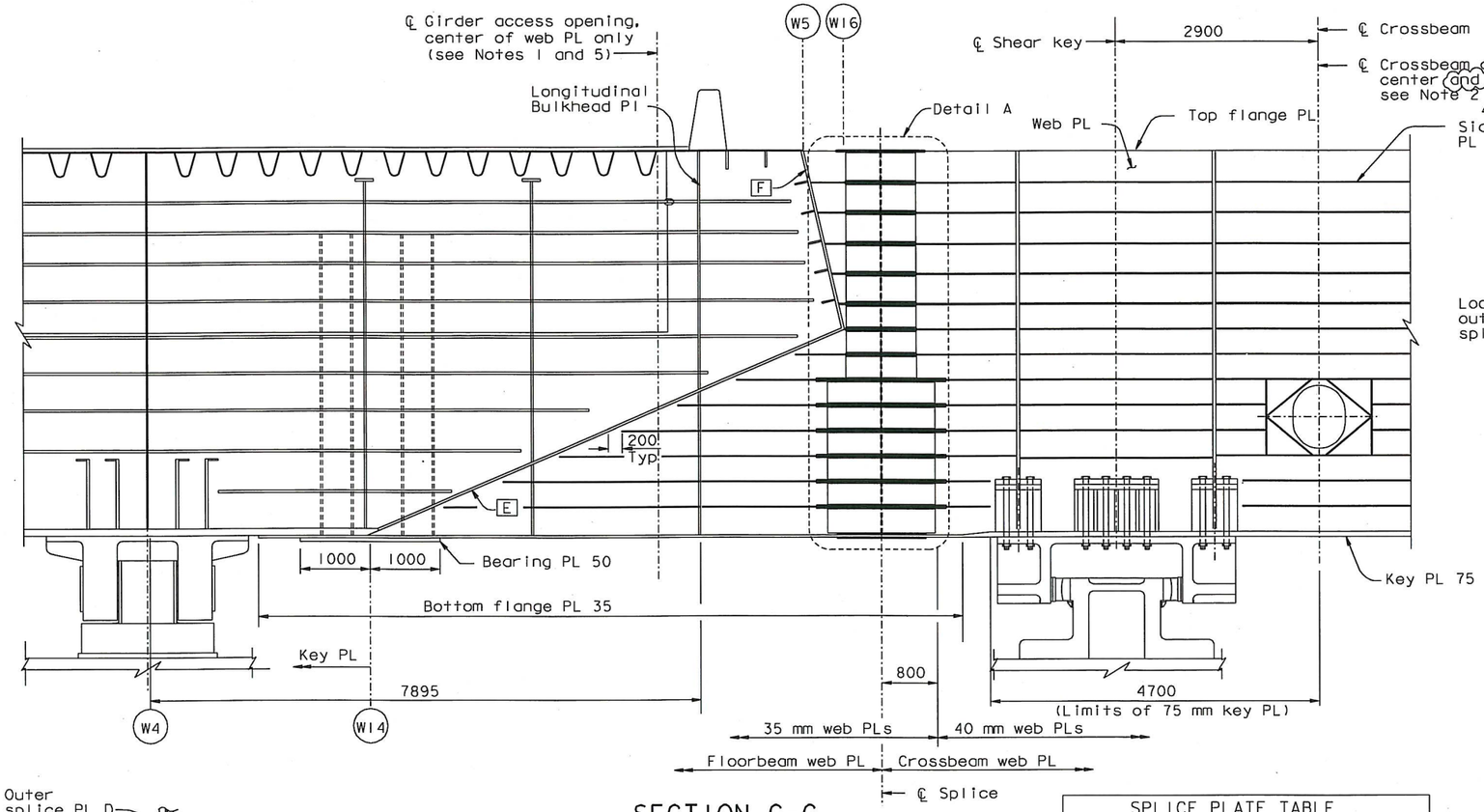

SECTION C-C
1:40

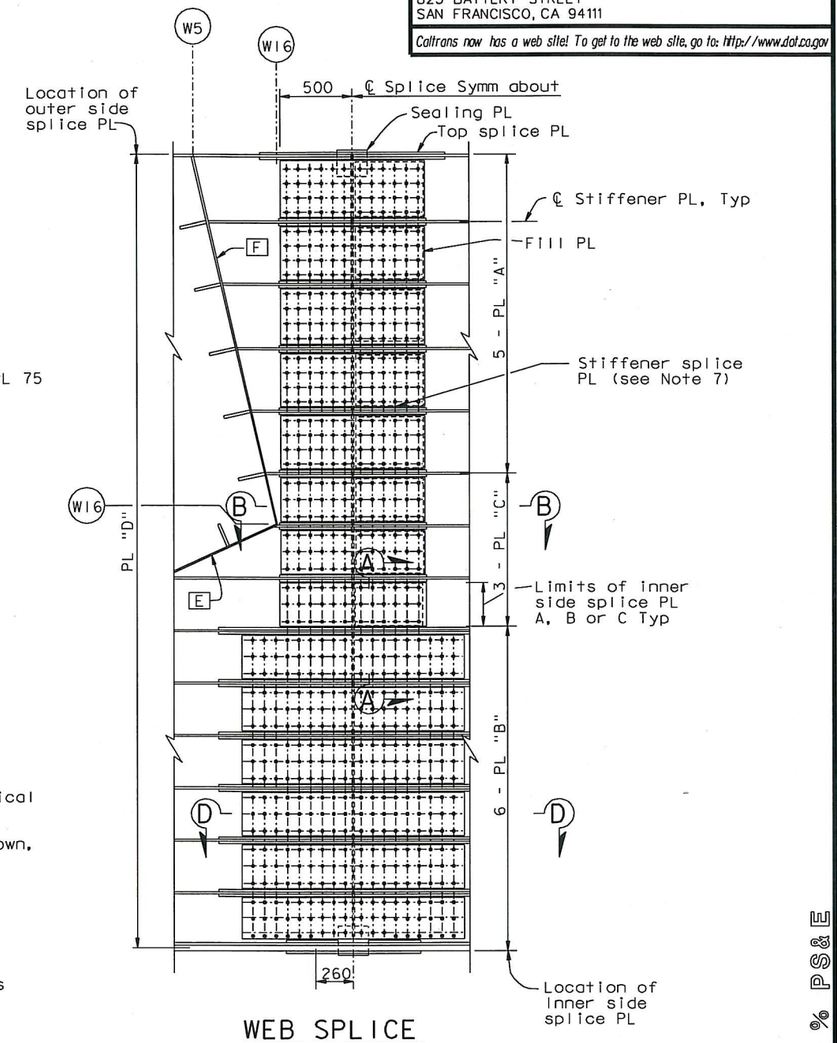

WEB SPLICE
DETAIL A
1:20

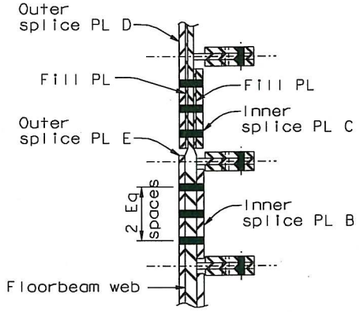

SECTION A-A
1:10

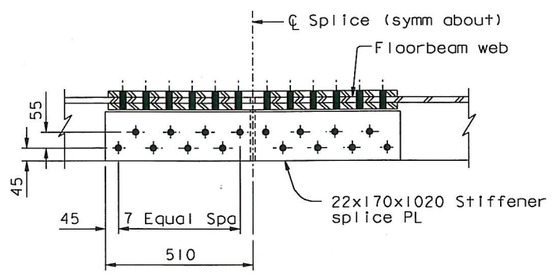

SECTION B-B
1:10

SPLICE PLATE TABLE	
Plate Type	Dimensions
Inner Splice PL "A"	PL 22x1000x390
Inner Splice PL "B"	PL 22x1620x310
Outer Splice PL "D"	PL 28x1000x3170
Inner Splice PL "C"	PL 22x1000x310
Outer Splice PL "E"	PL 28x1620x2140

NOTES:

1. For details at girder access opening, see "Typical Girder Details No.15" sheet.
2. For details of crossbeam access opening not shown, see "Typical Crossbeam Details No.6" sheet.
3. For details not shown, see "Typical Crossbeam Details" sheets.
4. For layout of E2 floorbeam web, see "Girder At Pier E2 No.4" sheet.
5. For girder access locations, see "Girder Access Details No.3" sheet.
6. For details not shown, see "Typical Crossbeam Details No.5" sheet.
7. For stiffener splices, see Section A-A on "Typical Crossbeam at Pier E2 Details No.4" sheet.
8. For Section D-D, see "Crossbeam at Pier E2 No.5" sheet.

ALL DIMENSIONS ARE IN MILLIMETERS UNLESS OTHERWISE SHOWN

Daniel J. Turner
REGISTERED PROFESSIONAL ENGINEER Daniel J. Turner No. C 65033 Exp. 06/30/11 CIVIL STATE OF CALIFORNIA

FOR REVISIONS ONLY

CONTRACT CHANGE ORDER NO. 86
SHEET 9 OF 12

REQUESTS FOR INFORMATION NOT ADDRESSED IN THIS CCO REMAIN IN FORCE

MARK	DATE	DESCRIPTIONS	BY	CH'D	CCO#
1	11/05/10	PP119 ACCESS & PP125 PLATES	GB	DT	86

REVISIONS

R. Valizadeh/V. Toan/Y.L./W.L./F.C.
DESIGN OVERSIGHT
SIGN OFF DATE 11/09/10

DESIGN BY G. Baker CHECKED P. Ritchie
DETAILS BY D. Veytsman CHECKED T. McMeans
QUANTITIES BY D. Turner CHECKED M. Roberts

PREPARED FOR THE STATE OF CALIFORNIA DEPARTMENT OF TRANSPORTATION

R. Manzanarez
PROJECT ENGINEER

BRIDGE NO. 34-0006L/R
KILOMETER POST 13.2/13.9

SAN FRANCISCO OAKLAND BAY BRIDGE
EAST SPAN SEISMIC SAFETY PROJECT
SELF-ANCHORED SUSPENSION BRIDGE
(SUPERSTRUCTURE & TOWER)

CROSSBEAM AT PIER E2 NO.6

Rev. Date: 5-18-98

ORIGINAL SCALE IN MILLIMETERS FOR REDUCED PLANS 0 10 20 30 40 50 60 70 80 90 100

CU 04
EA 0120F1

DISREGARD PRINTS BEARING EARLIER REVISION DATES

REVISION DATES (PRELIMINARY STAGE ONLY) 08/02/99 05/23/01 04/08/02 07/01/02 12/19/02 12/01/05

SHEET 305R1 OF

100 % PS&E

USERNAME => DWinrow DATE PLOTTED => 05 NOV 2010 TIME PLOTTED => 10:59:03

FILE => I:\bb\04-0120F1\sas\contract plans and cco\cco\cco#86\1-original 11-05-10\dgn\agcrs17.dgn

DIST.	COUNTY	ROUTE	KILOMETER POST TOTAL PROJECT	SHEET NO.	TOTAL SHEETS
04	SF	80	13.2/13.9	924R4	1204

REGISTERED ENGINEER - CIVIL

12-6-04
PLANS APPROVAL DATE

Marwan N. Nader No. C 054426 Exp. 12/31/11 CIVIL — REGISTERED PROFESSIONAL ENGINEER — STATE OF CALIFORNIA

The State of California or its officers or agents shall not be responsible for the accuracy or completeness of electronic copies of this plan sheet.

T.Y. LIN / MOFFATT & NICHOL
825 BATTERY STREET
SAN FRANCISCO, CA 94111

Caltrans now has a web site! To get to the web site, go to: http://www.dot.ca.gov

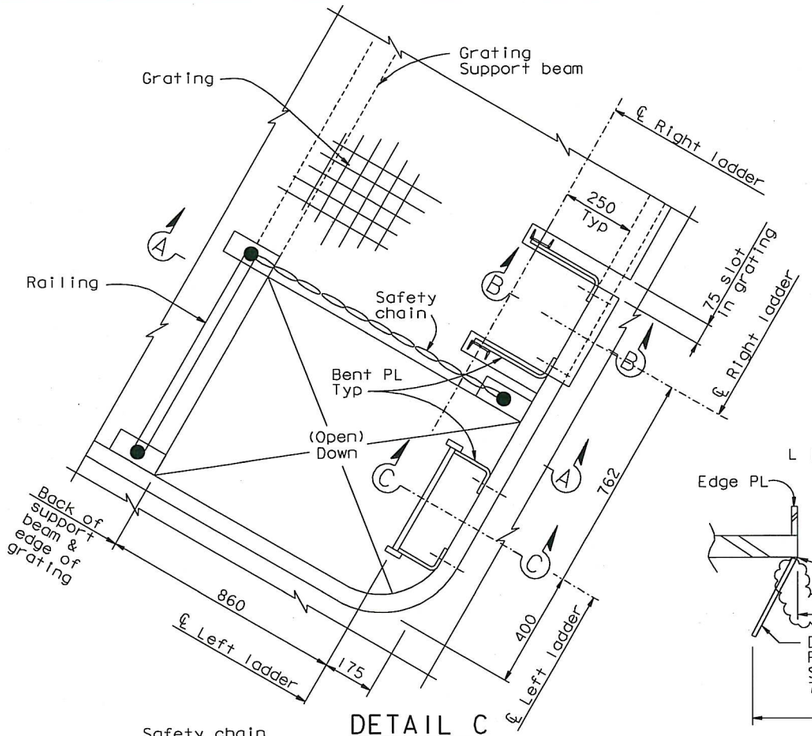

DETAIL C
1:10

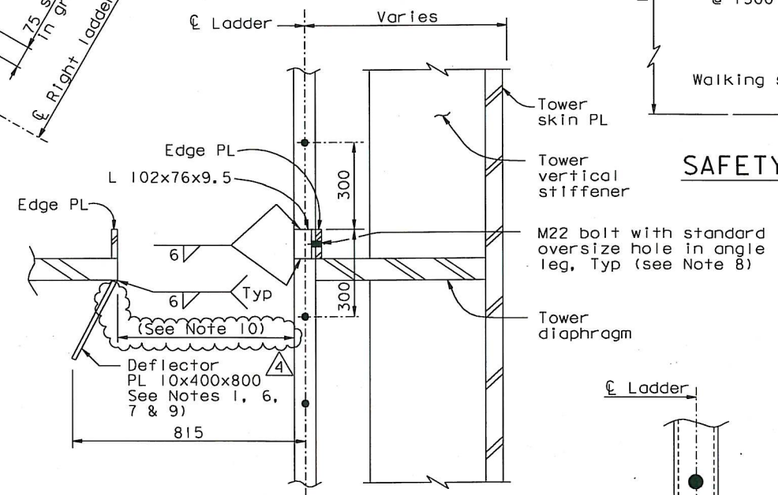

SECTION D-D
1:10

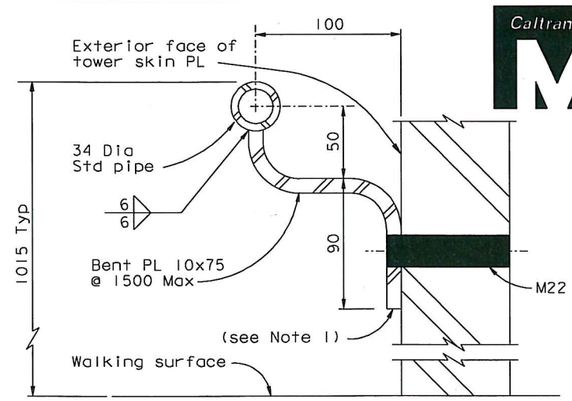

SAFETY HANDRAIL TYPICAL DETAIL
1:2

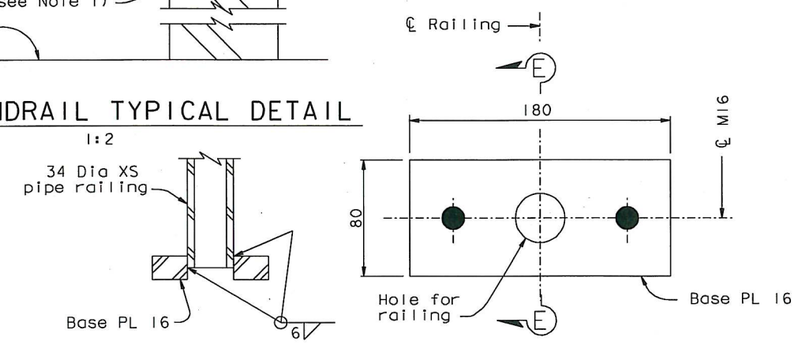

SECTION E-E

PLAN VIEW

RAILING BASE PLATE DETAILS
1:2

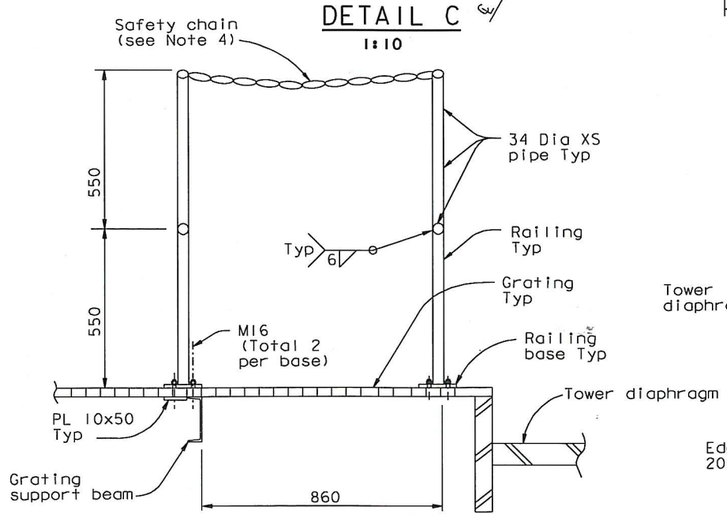

SECTION A-A
1:10

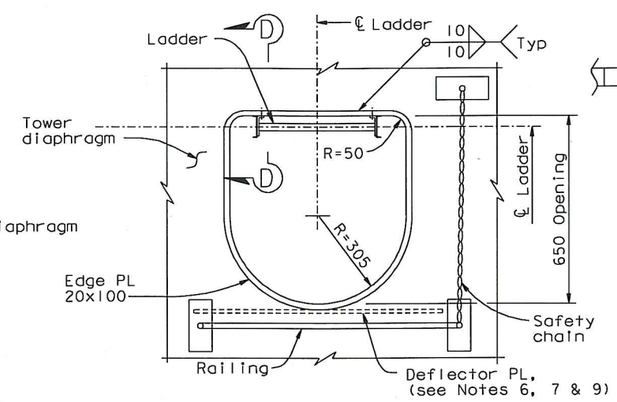

DETAIL E
1:10

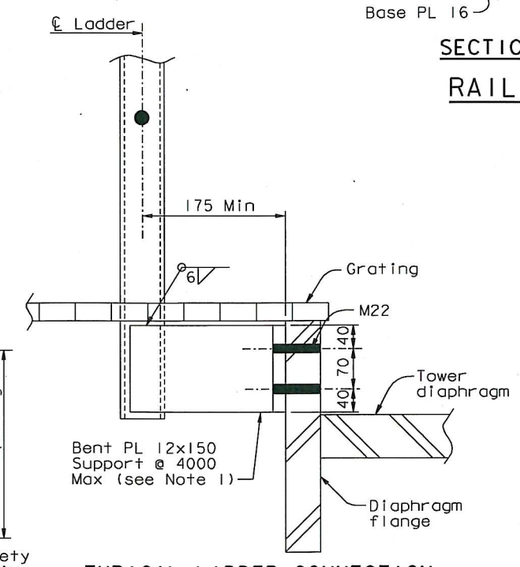

TYPICAL LADDER CONNECTION TO DIAPHRAGM FLANGE

SECTION B-B
1:5

(SECTION C-C similar)

NOTES:

1. The Contractor shall detail typical connections to fit the supporting structure, and may submit alternative designs for review and approval of the Engineer.
2. For tower diaphragm dimensions, see "Tower Diaphragm Details" sheets.
3. For ladder details not shown, see "Tower Access Details No. 7" sheet.
4. Safety chain shall be galvanized chain with spring clip end fasteners. Chain and fasteners to be rated at 5 kN (1000 lb) breaking load.
5. Opening in grating and direction of ladder shall alternate as shown on Section B-B on "Tower Access Details No.5" sheet. Railing and safety chain shall enclose opening in grating.
6. Deflector plate may be omitted at the two ladder openings at elevation 9.000 m.
7. Deflector plate may be coped or slotted to clear longitudinal stiffeners.
8. Bolt shall be installed snug-tight prior to load transfer and fully tensioned after load transfer.
9. Deflector plates interfering with diaphragm web access openings at elevation 109.000 m and above shall be omitted.
10. Deflector plates shall be placed at tower and girder access openings with less than 765 clear distance to the ladder rung. (4)

CONTRACT CHANGE ORDER NO. 86
SHEET 10 OF 12

REQUESTS FOR INFORMATION NOT ADDRESSED IN THIS CCO REMAIN IN FORCE

MARK	DATE	DESCRIPTIONS	BY	CH'D	CCO#
4	11/05/10	PP119 ACCESS & PP125 PLATES	GB	DT	86
3	12/18/09	HANDRAIL AND PLATFORMS	MN	TH	114
2	06/19/09	HANDRAIL	MN	TH	114
1	07/18/08	TOWER ACCESS	NV	MN	65

REVISIONS

ALL DIMENSIONS ARE IN MILLIMETERS UNLESS OTHERWISE SHOWN

R. Vallzadeh/V. Toan/Y.L./W.L./F.C.
DESIGN OVERSIGHT
SIGN OFF DATE 11/09/10

DESIGN BY M. Nader CHECKED M. Gulyas
DETAILS BY G. Baker CHECKED L. Rus
QUANTITIES BY D. Turner CHECKED J. Leventini

PREPARED FOR THE STATE OF CALIFORNIA DEPARTMENT OF TRANSPORTATION

R. Manzanarez
PROJECT ENGINEER

BRIDGE NO. 34-0006L/R
KILOMETER POST 13.2/13.9

SAN FRANCISCO OAKLAND BAY BRIDGE
EAST SPAN SEISMIC SAFETY PROJECT
SELF-ANCHORED SUSPENSION BRIDGE
(SUPERSTRUCTURE & TOWER)

TOWER ACCESS DETAILS NO. 8

Rev. Date: 5-18-98

ORIGINAL SCALE IN MILLIMETERS FOR REDUCED PLANS 0 10 20 30 40 50 60 70 80 90 100

CU 04
EA 0120F1

DISREGARD PRINTS BEARING EARLIER REVISION DATES

REVISION DATES (PRELIMINARY STAGE ONLY) 05/16/99 08/02/99 05/31/01 04/08/02 07/01/02 12/19/02

SHEET 507R4 OF

FILE => I:\bb\04-01200I\sas\contract plans and cco\cco\cco#86\1-original 11-05-10\dgn\akacc08c.dgn

USERNAME => DWinrow DATE PLOTTED => 05 NOV 2010 TIME PLOTTED => 11:00:05

100 % PS&E

DIST.	COUNTY	ROUTE	KILOMETER POST TOTAL PROJECT	SHEET NO.	TOTAL SHEETS
04	SF	80	13.2/13.9	943R1	1204

George Baker
REGISTERED ENGINEER - CIVIL
12-6-04
PLANS APPROVAL DATE

REGISTERED PROFESSIONAL ENGINEER George S. Baker No. C57112 Exp. 12/31/05 CIVIL STATE OF CALIFORNIA

The State of California or its officers or agents shall not be responsible for the accuracy or completeness of electronic copies of this plan sheet.

T.Y. LIN / MOFFATT & NICHOL
825 BATTERY STREET
SAN FRANCISCO, CA 94111

Caltrans now has a web site! To get to the web site, go to: http://www.dot.ca.gov

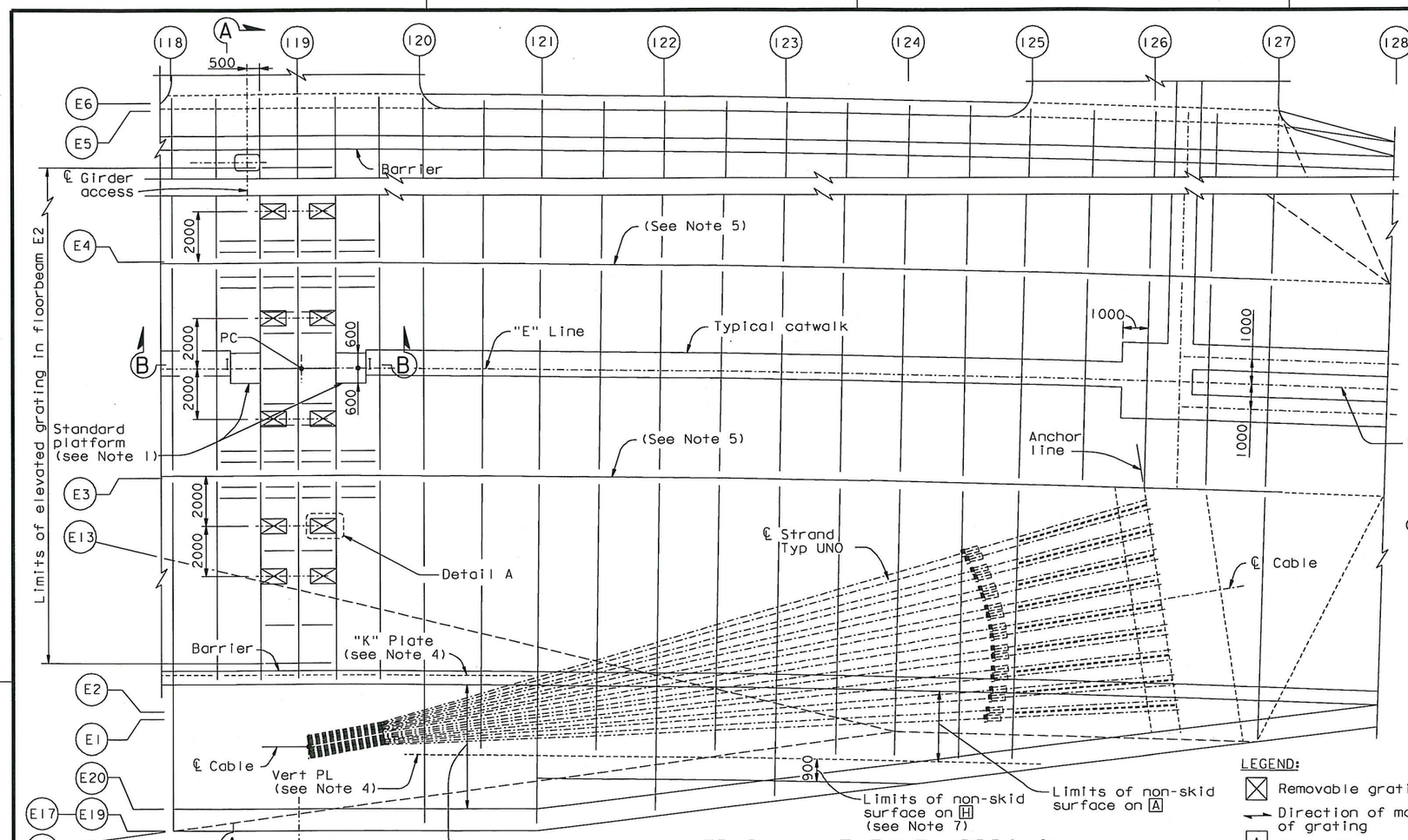

GIRDER PLAN AT EAST APPROACH
1:100

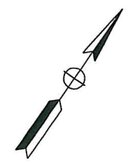

LEGEND:

- ☒ Removable grating access
- ⟷ Direction of main reinforcement of grating
- [A] Girder Face designation A

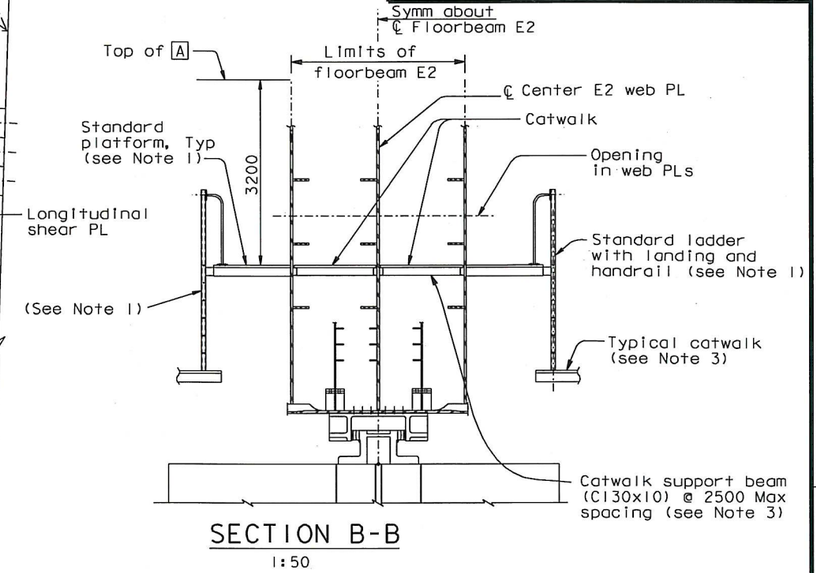

SECTION B-B
1:50

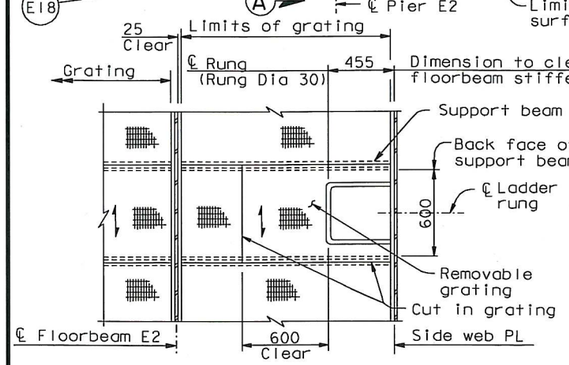

DETAIL A
1:20

REVISED PROFESSIONAL ENGINEER Daniel J. Turner No. C 65033 Exp. 06/30/11 CIVIL STATE OF CALIFORNIA

FOR REVISIONS ONLY

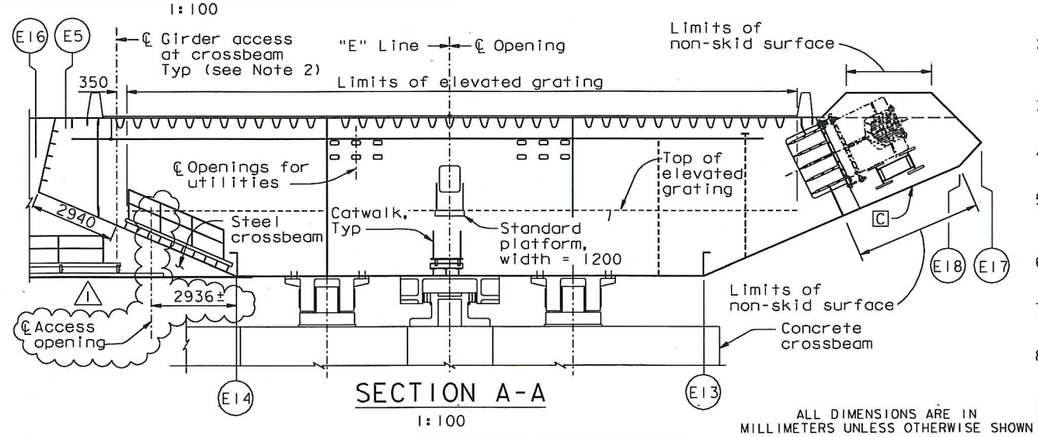

SECTION A-A
1:100

ALL DIMENSIONS ARE IN MILLIMETERS UNLESS OTHERWISE SHOWN

NOTES:

1. For standard platform, ladder and railing, see "Tower Access Details" sheets. Channel 75 ladder rails shall be spaced at 500 mm back-to-back. Landing handrails shall be spaced at 500 mm clear or greater.
2. For access openings and rungs, see "Typical Girder Details No. 15", "Crossbeam At Pier E2", and "Girder At Pier E2" sheets.
3. For catwalk details not shown, see "Girder Access Details No. 2" sheet.
4. For "K" plate and vertical plate access openings, see "Girder At East Transition Details" sheets.
5. For access openings in longitudinal shear plates, see "Typical Girder Details No. 7" and "Girder At East Transition No. 9" sheets.
6. For other access openings, see "Floorbeam At East Transition" sheets.
7. Within limits shown, apply non-skid surface to face H and the upper face of longitudinal stiffeners.
8. Locate crossbeam catwalk 1300 west of west side web.

CONTRACT CHANGE ORDER NO. 86
SHEET 11 OF 12

REQUESTS FOR INFORMATION NOT ADDRESSED IN THIS CCO REMAIN IN FORCE

R. Valizadeh/V. Toan/Y.L./W.L./F.C.
DESIGN OVERSIGHT
Roya Valizadeh / Vong Toan / Y. Liu
SIGN OFF DATE 11/05/10

MARK	DATE	DESCRIPTIONS	BY	CH'D	CCO#
1	11/05/10	PP119 ACCESS & PP125 PLATES	GB	DT	86

REVISIONS

DESIGN	BY G. Baker	CHECKED	T. McMeans
DETAILS	BY C. Mauch	CHECKED	T. McMeans
QUANTITIES	BY C. Mauch	CHECKED	J. Leventini

PREPARED FOR THE STATE OF CALIFORNIA DEPARTMENT OF TRANSPORTATION

R. Manzanarez
PROJECT ENGINEER

BRIDGE NO. 34-0006L/R
KILOMETER POST 13.2/13.9

SAN FRANCISCO OAKLAND BAY BRIDGE
EAST SPAN SEISMIC SAFETY PROJECT
SELF-ANCHORED SUSPENSION BRIDGE
(SUPERSTRUCTURE & TOWER)

GIRDER ACCESS DETAILS NO. 3

Rev. Date: 5-18-98

ORIGINAL SCALE IN MILLIMETERS FOR REDUCED PLANS 0 10 20 30 40 50 60 70 80 90 100

CU 04
EA 0120F1

DISREGARD PRINTS BEARING EARLIER REVISION DATES

REVISION DATES (PRELIMINARY STAGE ONLY) 01/12/99 05/10/99 08/02/99 05/23/01 04/08/02 07/01/02 12/13/02 12/01/05

SHEET 526R1 OF

FILE => I:\bb\04-01200I\sas\contract plans and cco\cco\cco#86\I-original 11-05-10\dgn\akacc13.dgn

USERNAME => DWinrow DATE PLOTTED => 05 NOV 2010 TIME PLOTTED => 11:01:00

100 % PS&E

DIST.	COUNTY	ROUTE	KILOMETER POST TOTAL PROJECT	SHEET NO.	TOTAL SHEETS
04	SF	80	13.2/13.9	94351	1204

Daniel J. Turner
REGISTERED ENGINEER - CIVIL
11-05-10
PLANS APPROVAL DATE

REGISTERED PROFESSIONAL ENGINEER Daniel J. Turner No. C 65033 Exp. 06/30/11 CIVIL STATE OF CALIFORNIA

The State of California or its officers or agents shall not be responsible for the accuracy or completeness of electronic copies of this plan sheet.

T.Y. LIN / MOFFATT & NICHOL
825 BATTERY STREET
SAN FRANCISCO, CA 94111

Caltrans now has a web site! To get to the web site, go to: http://www.dot.ca.gov

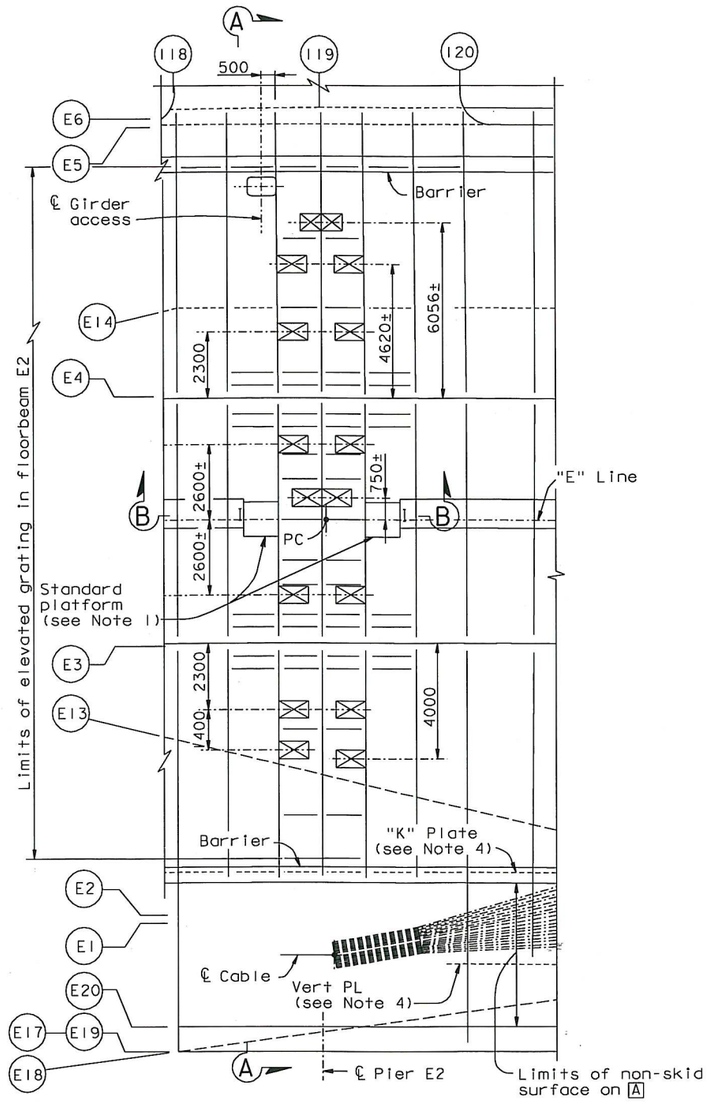

DETAIL B
1:100

CONTRACT CHANGE ORDER NO. 86
SHEET 12 OF 12

REQUESTS FOR INFORMATION NOT ADDRESSED IN THIS CCO REMAIN IN FORCE

ALL DIMENSIONS ARE IN MILLIMETERS UNLESS OTHERWISE SHOWN

R. Valizadeh/V. Toan/Y.L./W.L./F.C.
DESIGN OVERSIGHT
SIGN OFF DATE 11/05/10

MARK	DATE	DESCRIPTIONS	BY	CH'D	CCO#
0	11/05/10	PP119 ACCESS & PP125 PLATES	GB	DT	86

REVISIONS

DESIGN	BY G. Baker	CHECKED	D. Turner
DETAILS	BY G. Baker	CHECKED	D. Turner
QUANTITIES	BY G. Baker	CHECKED	D. Turner

PREPARED FOR THE STATE OF CALIFORNIA DEPARTMENT OF TRANSPORTATION

R. Manzanarez
PROJECT ENGINEER

BRIDGE NO. 34-0006L/R
KILOMETER POST 13.2/13.9

SAN FRANCISCO OAKLAND BAY BRIDGE
EAST SPAN SEISMIC SAFETY PROJECT
SELF-ANCHORED SUSPENSION BRIDGE
(SUPERSTRUCTURE & TOWER)

GIRDER ACCESS DETAILS NO. 3A

Rev. Date: 5-18-98

ORIGINAL SCALE IN MILLIMETERS FOR REDUCED PLANS 0 10 20 30 40 50 60 70 80 90 100

CU 04
EA 0120F1

DISREGARD PRINTS BEARING EARLIER REVISION DATES 11/05/10

REVISION DATES (PRELIMINARY STAGE ONLY)

SHEET 526S1 OF

FILE => L:\BB\04-012001\SAS\Contract Plans and CCO\CCO\CCO#86\1-Original 11-05-10\DGN\akacc13a.dgn

100 % PS&E

USERNAME => DWinrow DATE PLOTTED => 05 NOV 2010 TIME PLOTTED => 11:02:49