DIST	COUNTY	ROUTE	KILOMETER POST TOTAL PROJECT	SHEET No	TOTAL SHEETS
04	SF	80	13.2/13.9	69R2	1204

Robert E. Bethel
REGISTERED MECHANICAL ENGINEER

12-6-04
PLANS APPROVAL DATE

REGISTERED PROFESSIONAL ENGINEER ROBERT E. BETHEL No. M018543 Exp. 9/30/06 MECHANICAL STATE OF CALIFORNIA

T.Y. LIN / MOFFATT & NICHOL
825 BATTERY STREET
SAN FRANCISCO, CA 94111

The State of California or its officers or agents shall not be responsible for the accuracy or completeness of electronic copies of this plan sheet.

Caltrans now has a web site! To get to the web site, go to: http://www.dot.ca.gov

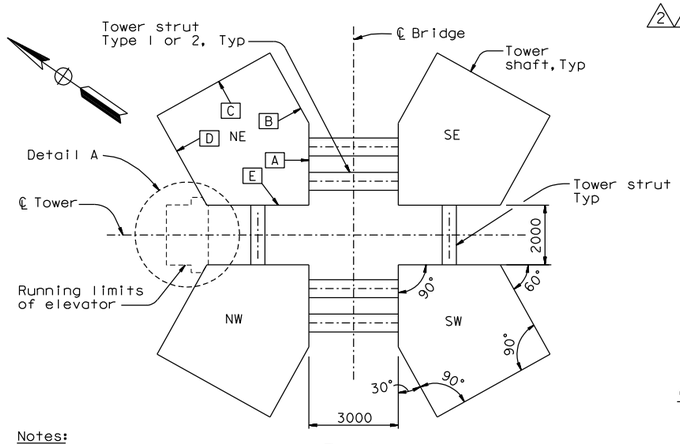

PLAN
1:100

Notes:
1. For longitudinal elevation looking North see "Elevator Detail No. 2" Sheet.

LEGEND:
NE Northeast tower shaft designation
[A] Tower shaft skin plate designation

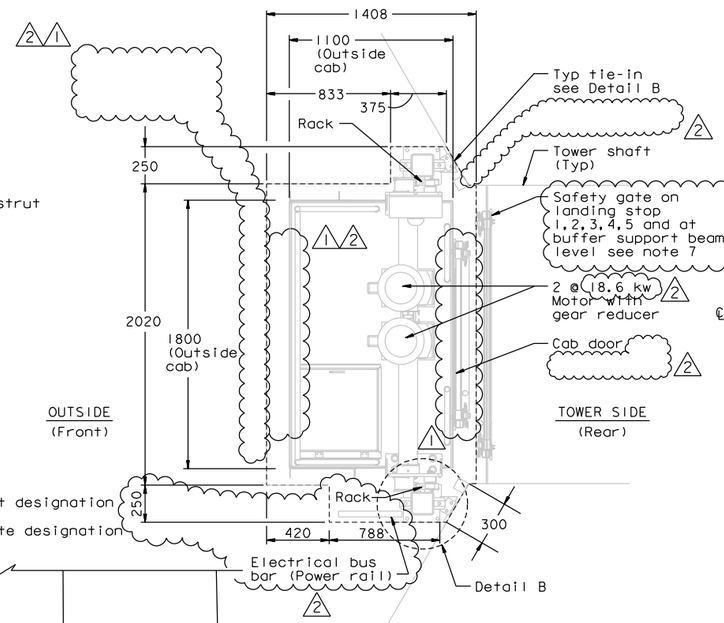

DETAIL A
1:20

NOTES:
1. Elevator to be USA Hoist Co., Inc. model 2000 DR, or approved equal, USA Hoist model 2000 DR shown.
2. Elevator to pass through running limits shown.
3. Elevator minimum clear inside dimensions shall be approximately 1676 wide x 965 deep x 2590 high.
4. Design wind velocity 190 km/hr at bridge deck.
5. Elevator minimum door size shall be 1475 wide x 2438 high.
6. Elevator guide rail mast shall attach to tower shaft NE & NW skin plate [D] only at the locations shown in Detail B. No supports, bracing or drive mechanisms are permitted between tower shafts.
7. For safety gate details see Special Provisions.

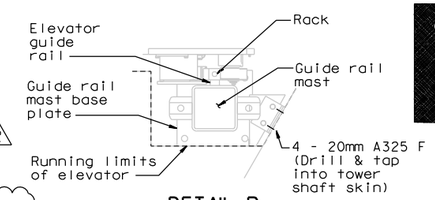

DETAIL B
(Plan Typ. Tie-In)
3048 max. Spacing
1:10

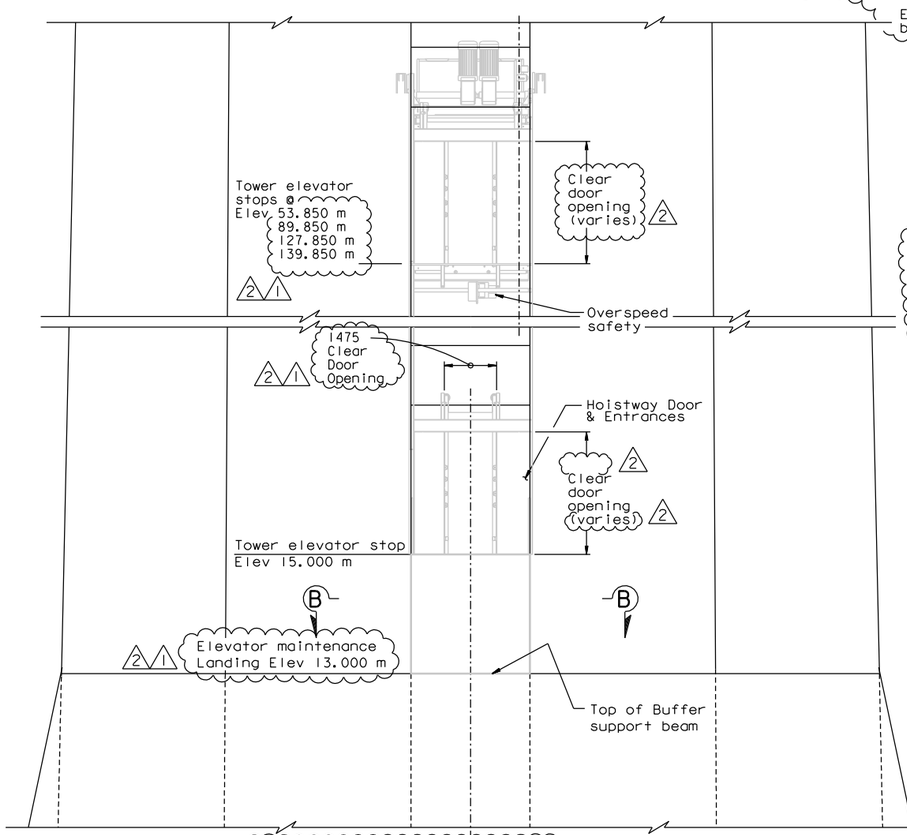

TOWER SIDE (CAB REAR) ELEVATION
Not To Scale

NOTES:
1. For tower shaft details, see Bridge Plans.
2. The elevator guide rail mast runs along the edge of tower shaft skin plate [D]
3. Details shown are for illustrative purposes only. Final design configuration and details, including guide rails and supports, are the responsibility of the elevator manufacturer.

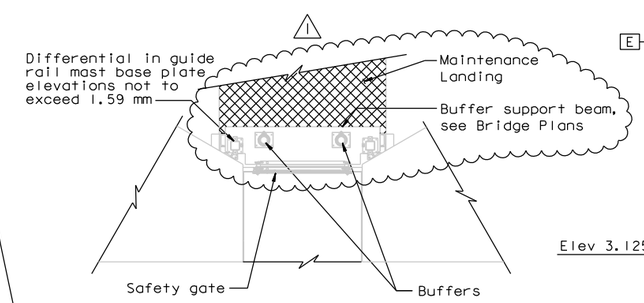

SECTION B-B
(Plan at Buffer Support)
1:50

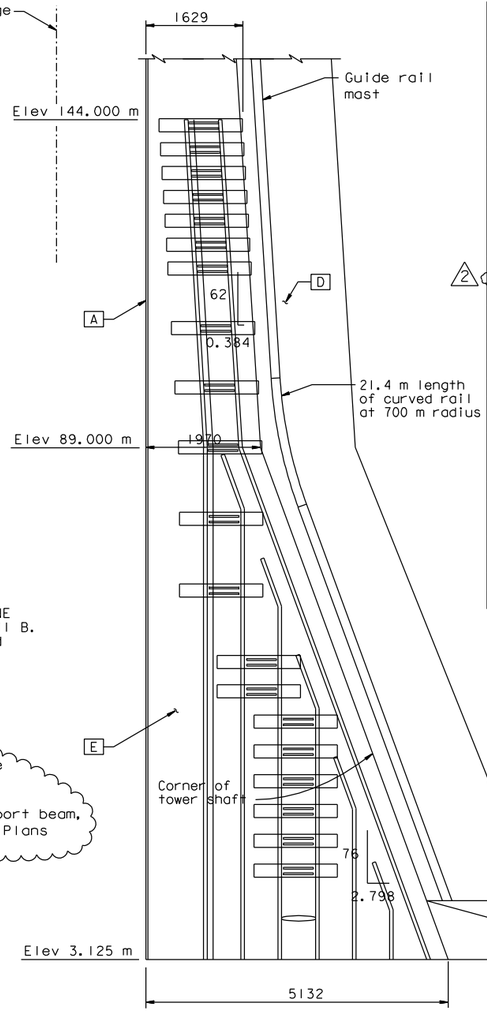

GUIDE RAIL GEOMETRY DEFINITION
Horiz=1:50
Vert =1:500

GENERAL DATA	
Model	2000 DR (USA Hoist Co.)
Classification	Rack & Pinion Elevator
Capacity	907 Kg
Speed	0.76 m/s
Car Weight	2948 Kg
Operation	Single Automatic Operation
Landing Served	1, 2, 3, 4 & 5
Car & Hoistway Enclosure	
Car Safety	Rack & Pinion
Car/Hoistway Doors	Single vertical sliding panel/sliding door
Car Flooring/Roof	Aluminum Tread Plate
Car Walls-Exterior and Interior	Galvanized - G90, MCU Primer with Polysiloxane Top Coat (White) or Equal
Car Sled	Hot Dipped Galvanized
Car Glass Panels	Laminated Glass
Tower Tie-In	Hot Dipped Galvanized
Base Enclosure	Galvanized - G90
Buffer/Stroke	Spring Buffer/127 or Hydraulic Buffer/229
Governor/Trip Speed	210 fpm / 1.07 m/s
Machine Data	
Motor/Gear Box/Brake	90 Helical Bevel
Motor Kw	(2) 25HP / 18.6 Kw (Max Amp Operating Load Req. - 56.2)
Power Supply	480 Volts 100 A. 3 ph 60 Cy.
Guide Rail Mast (2 Each)	
Mast Section	TS 152 x 152 x 7.9 - A 500 Grade B
Mast Section Finish	Hot Dipped Galvanized
Mast Weight	113.4 Kg
Rack Material	AISI 1045 or Equiv.

Vertical Loads At Bottom Of Guide Rail Masts (KN)		
	Per Mast	Per Buffer
Load Case 1 (Safety Set)	118.50	0
Load Case 2 (Buffer Impact)	127.29	63.65
Load Case 3	168.20	
Seismic (1g)		0

Horizontal Seismic Loads At Guide Rail Mast Tie-Ins

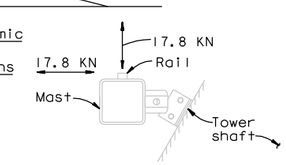

CONTRACT CHANGE ORDER NO. --
SHEET ____ OF ____

MARK	DATE	DESCRIPTIONS	BY	CH'D	CCO
2	08/26/11	ELEVATOR DETAILS	JNB	FS	85
1	07/17/09	ELEVATOR DETAILS	JNB	FS	85

REVISIONS

REGISTERED PROFESSIONAL ENGINEER JAL BIRDY No. 41547 Exp. 12-31-13 CIVIL STATE OF CALIFORNIA

FOR REVISIONS 1 & 2 ONLY

ELEVATOR DETAIL NO. 1

ALL DIMENSION ARE IN MILLIMETERS UNLESS OTHERWISE SHOWN

M-33

REVISED BY	DATE REVISED
JNB	4/21/09

CALCULATED/DESIGNED BY	DATE
ES	5/3/02
CHECKED BY	5/3/02
RB	

DESIGN OVERSIGHT: Bob Zandipour

May 12, 2009

SAS STRUCTURE
STATE OF CALIFORNIA - DEPARTMENT OF TRANSPORTATION
Caltrans

FOR REDUCED PLANS ORIGINAL SCALE IS IN MILLIMETERS 0 20 40 60 80

FILE => I:\bb\04-012001\sas\contract plans and cco\cco\cco*85\5-update 08-26-11\dgn\40120fub033.dgn
USERNAME => DWinrow

CU 04251 EA 0120F1

LAST REVISION 00-00-00

DATE PLOTTED => 26 AUG 2011
TIME PLOTTED => 10:01:42

DIST	COUNTY	ROUTE	KILOMETER POST TOTAL PROJECT	SHEET No	TOTAL SHEETS
04	SF	80	13.2/13.9	70R2	1204

Robert E. Bethel
REGISTERED MECHANICAL ENGINEER

12-6-04
PLANS APPROVAL DATE

REGISTERED PROFESSIONAL ENGINEER ROBERT E. BETHEL No. M018543 Exp. 9/30/06 MECHANICAL STATE OF CALIFORNIA

T.Y. LIN / MOFFATT & NICHOL
825 BATTERY STREET
SAN FRANCISCO, CA 94111

The State of California or its officers or agents shall not be responsible for the accuracy or completeness of electronic copies of this plan sheet.

Caltrans now has a web site! To get to the web site, go to: http://www.dot.ca.gov

Caltrans Metric

REGISTERED PROFESSIONAL ENGINEER JAL BIRDY No. 41547 Exp. 12-31-13 CIVIL STATE OF CALIFORNIA

FOR REVISIONS 1 & 2 ONLY

MARK	DATE	DESCRIPTIONS	BY	CH'D	CCO
2	08/19/11	ELEVATOR DETAILS	JNB	FS	85
1	07/17/09	ELEVATOR DETAILS	JNB	FS	85

REVISIONS

CONTRACT CHANGE ORDER NO. __
SHEET ____ OF ____

NOTES:
1. Elevation of tower elevation stops are given at the foot level (tower strut facade top PL, tower diaphragm at elevation 13.000 m).
2. For tower strut facade details, see Bridge Plans.
3. For tower diaphragm at elevation 13.000 m details, see Bridge Plans.
4. When elevator is not in use, it shall be parked at elev 15.000.
5. For elevator safety enclosures, see "Tower Elevator Enclosures" sheets.
6. For Tower Side Elevation see "Elevator Detail No. 1" sheet.

Legend: Tower elevator stop

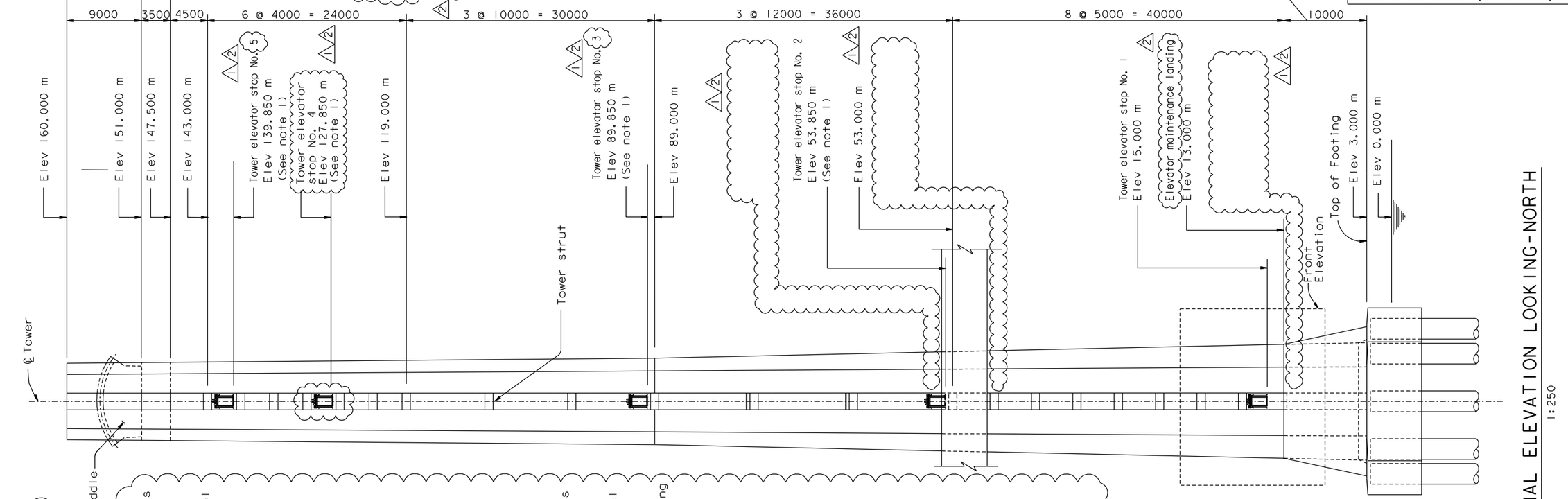

LONGITUDINAL ELEVATION LOOKING-NORTH
1:250

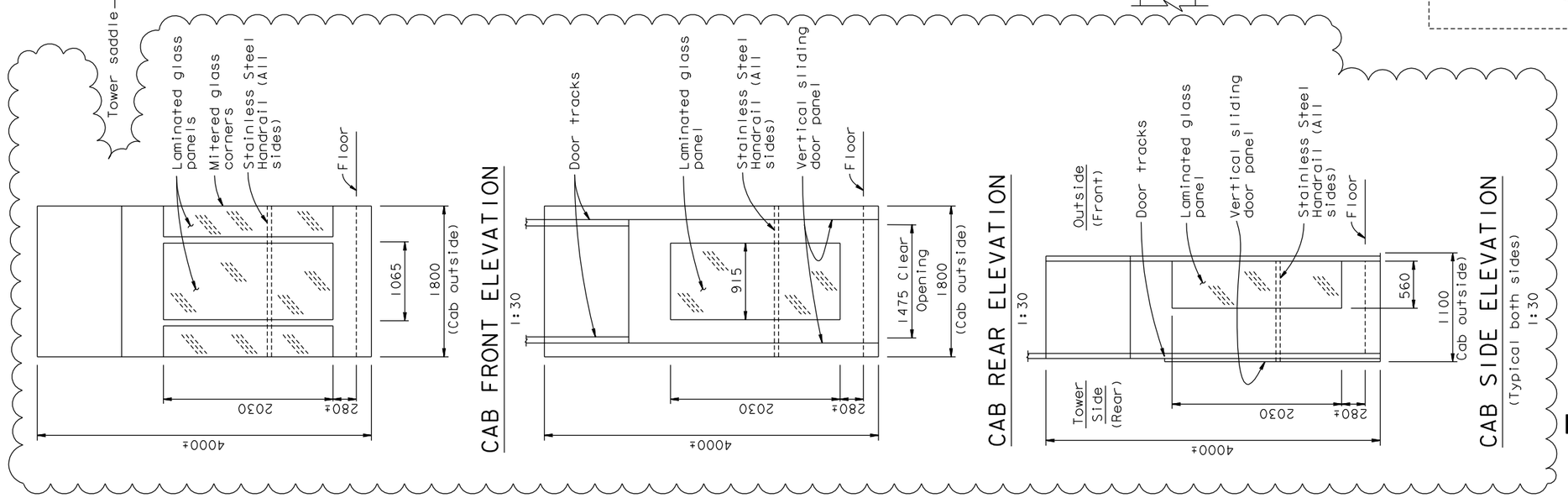

CAB FRONT ELEVATION
1:30

CAB REAR ELEVATION
1:30

CAB SIDE ELEVATION
(Typical both sides)
1:30

ELEVATOR DETAIL NO. 2

SCALE: 1:250

ALL DIMENSION ARE IN MILLIMETERS UNLESS OTHERWISE SHOWN

M-34

CALCULATED/ DESIGNED BY	ES	DATE 5/3/02	REVISED BY JNB
CHECKED BY	RB	5/3/02	DATE REVISED 4/21/09

DESIGN OVERSIGHT
Bob Zandipour

May 12, 2009

SAS STRUCTURE

STATE OF CALIFORNIA - DEPARTMENT OF TRANSPORTATION

Caltrans

FOR REDUCED PLANS ORIGINAL SCALE IS IN MILLIMETERS 0 20 40 60 80

FILE => I:\bb\04-012001\sas\contract plans and cco\cco\cco#85\4-revision 08-19-11\dgn\40120fub034.dgn
USERNAME => DWinrow

CU 04251 EA 0120F1

LAST REVISION 00-00-00
DATE PLOTTED => 19 AUG 2011
TIME PLOTTED => 14:21:01

DIST.	COUNTY	ROUTE	KILOMETER POST TOTAL PROJECT	SHEET NO.	TOTAL SHEETS
04	SF	80	13.2/13.9	531R1	1204

Caltrans Metric

REGISTERED ENGINEER - CIVIL

12-6-04
PLANS APPROVAL DATE

REGISTERED PROFESSIONAL ENGINEER Marwan N. Nader No. C 054426 Exp. 12/31/11 CIVIL STATE OF CALIFORNIA

The State of California or its officers or agents shall not be responsible for the accuracy or completeness of electronic copies of this plan sheet.

T.Y. LIN / MOFFATT & NICHOL
825 BATTERY STREET
SAN FRANCISCO, CA 94111

Caltrans now has a web site! To get to the web site, go to: http://www.dot.ca.gov

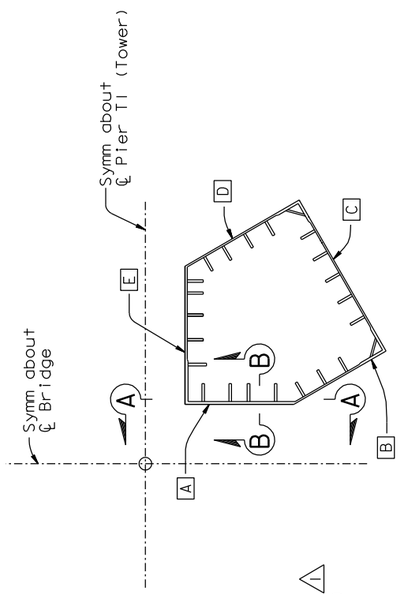

KEY PLAN

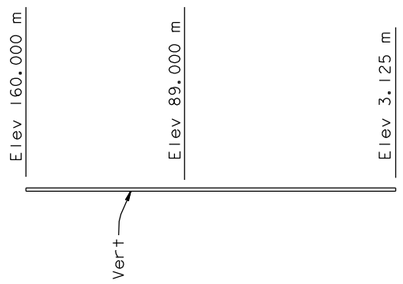

SECTION B-B
(Profile of Skin Plate "A")
(Longitudinal stiffener plates not shown for clarity)
Horiz=1:120
Vert =1:1200

Table 1

STIFFENER DESIGNATION	CUTOFF ELEVATION (m)
A1	144.000
A2	144.000
A3	144.000
A4	144.000

Table 2

ELEVATION (m)	SKIN PL THICKNESS (mm)
3.125-30.000	70
30.000-144.000	90

Table 3

ELEVATION (m)	TYPICAL STIFFENER SIZE (mm x mm)	STIFFENER A1 SIZE (mm x mm)
3.125-47.000	65x450	65x450
47.000-121.000	75x520	75x375
121.000-144.000	65x450	65x250

(See Note 7)

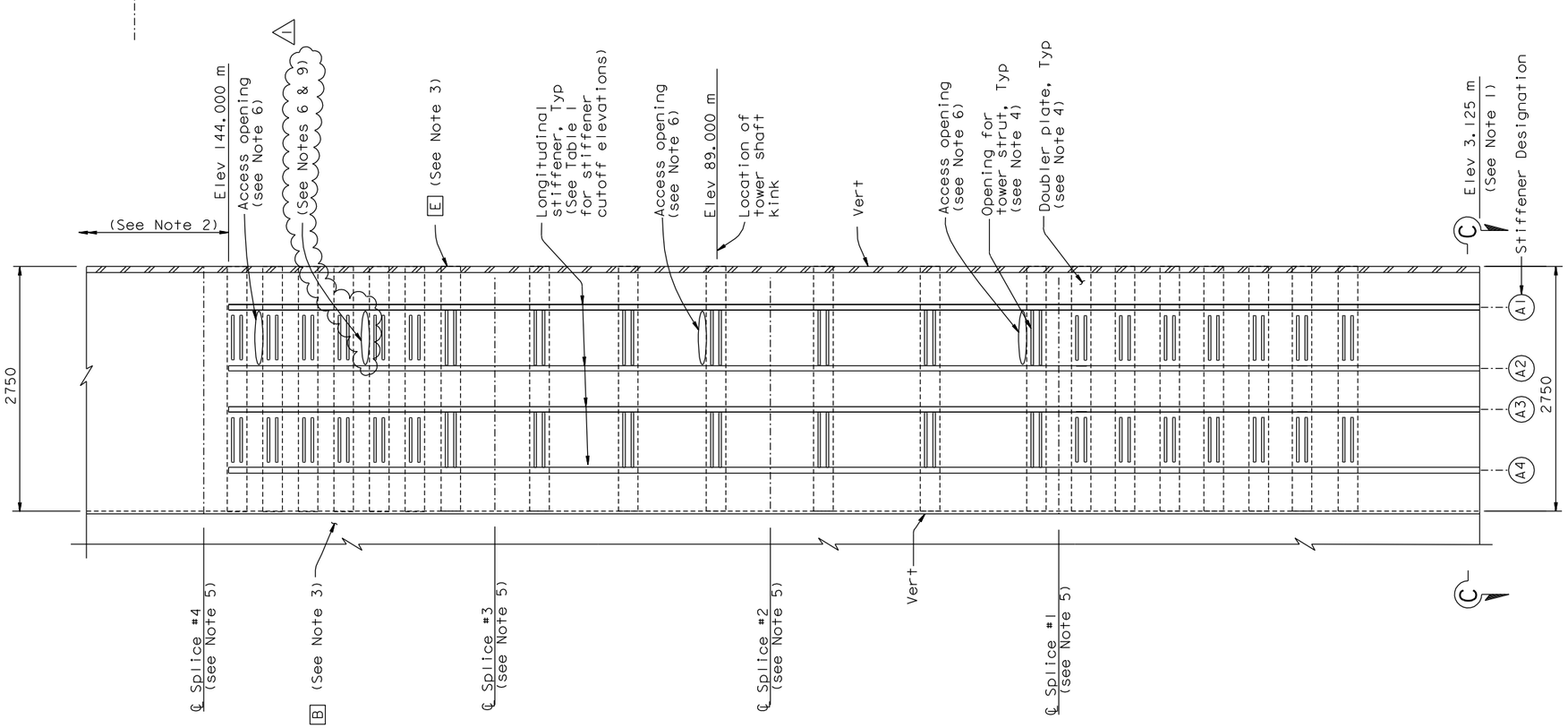

SECTION A-A
(Elevation of Skin Plate "A")
Horiz=1:30
Vert =1:300

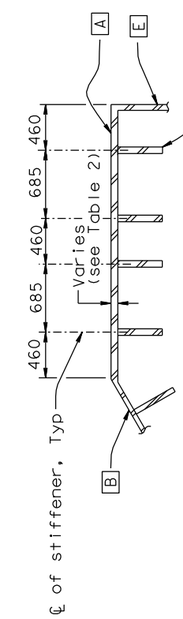

SECTION C-C
(Partial plan of Skin Plate "A")
1:30
(See Note 8)

NOTES:

1. For tower anchorage details (not shown for clarity), see "Tower Anchorage Details" sheets.
2. For tower saddle grillage and tower head details (not shown for clarity), see "Tower Saddle Grillage Details" and "Tower Head Details" sheets.
3. Longitudinal stiffeners on tower skin PL B & E not shown for clarity.
4. For tower strut and doubler plate opening, see "Tower Shaft Details No.10" sheet.
5. For tower shaft splice details, see "Tower Splice Details" sheets.
6. For access openings details, see "Tower Access Details" sheets.
7. For longitudinal stiffener transition at tower splices, see sheets "Tower Splice Details No.7", "Tower Splice Details No.12", "Tower Splice Details No.17", and "Tower Splice Details No.19".
8. Anchorage bearing stiffener plates are not shown for clarity. For details see "Tower Anchorage Details" sheets.
9. Provide additional access openings at locations shown.

100 % PS&E

CONTRACT CHANGE ORDER NO. ____
SHEET ___ OF ___

REQUESTS FOR INFORMATION NOT ADDRESSED IN THIS CCO REMAIN IN FORCE

ALL DIMENSIONS ARE IN MILLIMETERS UNLESS OTHERWISE SHOWN

R. Valizadeh/V. Toan/Y.L./W.L./F.C.
DESIGN OVERSIGHT
Y. Liu
SIGN OFF DATE 08/19/11

MARK	DATE	DESCRIPTIONS	BY	CH'D	CCO#
1	08/19/11	ELEVATOR DETAILS	TH	MN	85

REVISIONS

	BY	CHECKED
DESIGN	M. Nader	M. Gulyas
DETAILS	L. Rus	M. Gulyas
QUANTITIES	L. Rus	Y. Zhang

PREPARED FOR THE STATE OF CALIFORNIA DEPARTMENT OF TRANSPORTATION

R. Manzanarez
PROJECT ENGINEER

BRIDGE NO. 34-0006L/R
KILOMETER POST 13.2/13.9

SAN FRANCISCO OAKLAND BAY BRIDGE
EAST SPAN SEISMIC SAFETY PROJECT
SELF-ANCHORED SUSPENSION BRIDGE
(SUPERSTRUCTURE & TOWER)

TOWER SHAFT DETAILS NO. 3

Rev. Date: 5-18-98

ORIGINAL SCALE IN MILLIMETERS FOR REDUCED PLANS 0 10 20 30 40 50 60 70 80 90 100

CU 04
EA 0120F1

DISREGARD PRINTS BEARING EARLIER REVISION DATES

REVISION DATES (PRELIMINARY STAGE ONLY) 05/15/99 08/02/99 05/31/01 04/08/02 07/01/02 12/18/02 11/13/05

SHEET 114R1 OF

FILE => I:\bb\04-012001\sas\contract plans and cco\cco\cco*85\4-revision 08-19-11\dgn\aet1d03.dgn

USERNAME => DWinrow DATE PLOTTED => 19 AUG 2011 TIME PLOTTED => 14:21:50

DIST.	COUNTY	ROUTE	KILOMETER POST TOTAL PROJECT	SHEET NO.	TOTAL SHEETS
04	SF	80	13.2/13.9	917R5	1204

REGISTERED ENGINEER - CIVIL

12-6-04
PLANS APPROVAL DATE

REGISTERED PROFESSIONAL ENGINEER Marwan N. Nader No. C 054426 Exp. 12/31/11 CIVIL STATE OF CALIFORNIA

The State of California or its officers or agents shall not be responsible for the accuracy or completeness of electronic copies of this plan sheet.

T.Y. LIN / MOFFATT & NICHOL
825 BATTERY STREET
SAN FRANCISCO, CA 94111

Caltrans now has a web site! To get to the web site, go to: http://www.dot.ca.gov

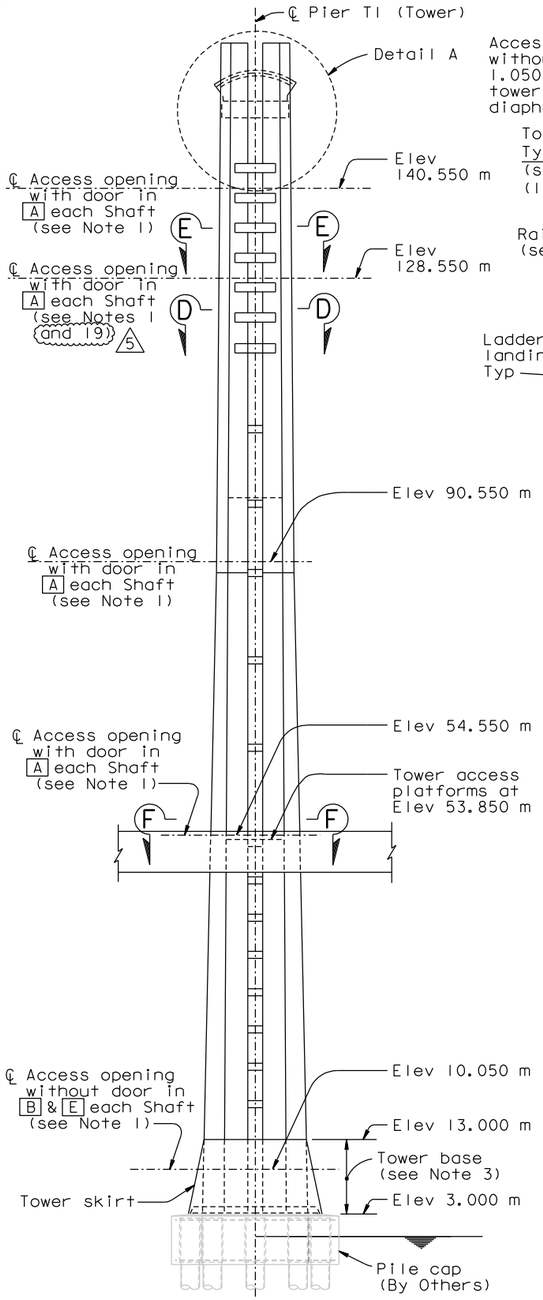

ELEVATION
1:400
(Looking North)

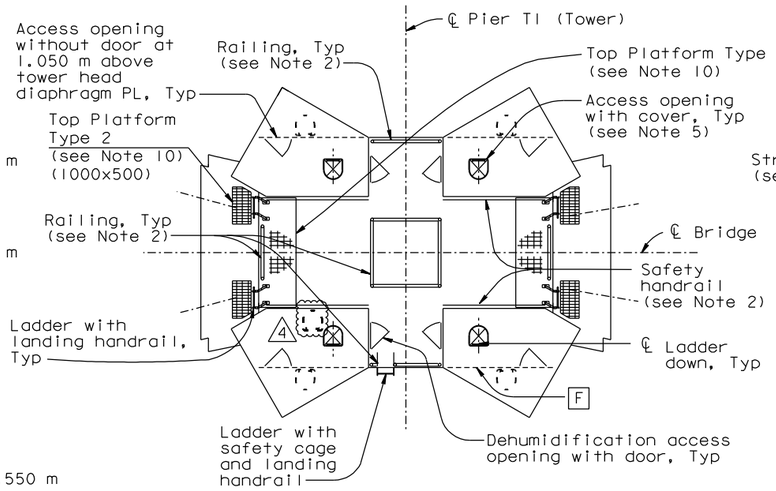

VIEW B-B (See Notes 7 & 18)
1:80

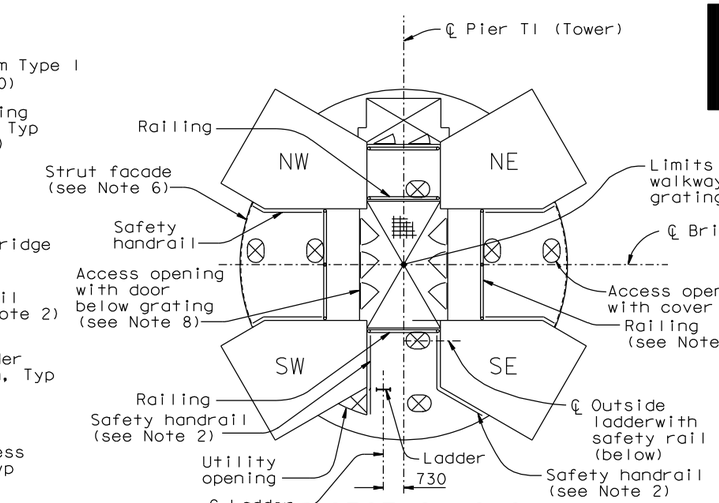

SECTION C-C
1:80

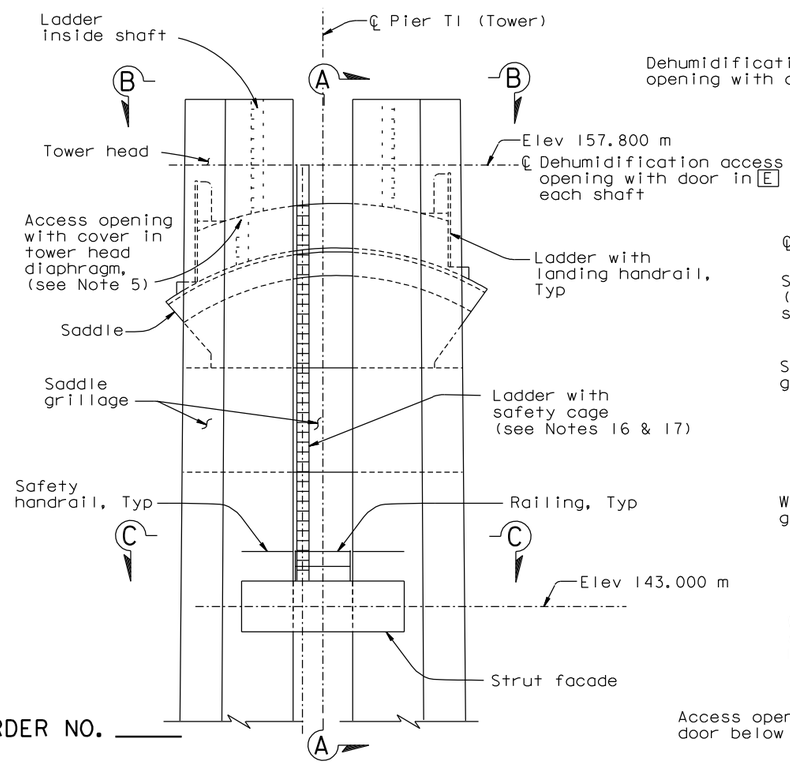

DETAIL A
1:100

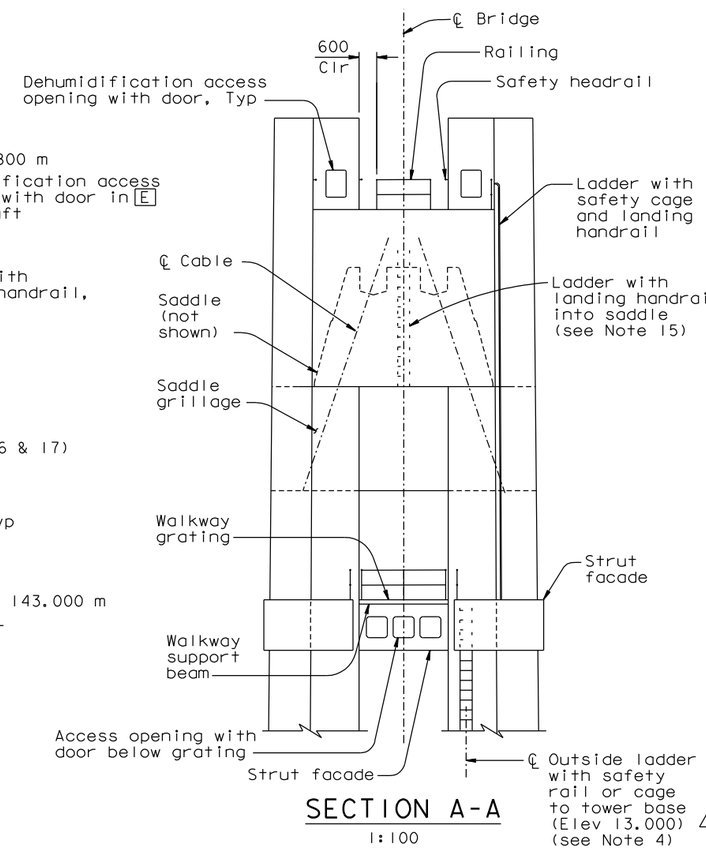

SECTION A-A
1:100

ALL DIMENSIONS ARE IN MILLIMETERS UNLESS OTHERWISE SHOWN

LEGEND:

▽ Access opening (see Notes 1, 3, 8 & 14)

[A] Tower shaft skin plate A

NOTES:

1. For location of access openings in tower shafts, see "Tower Shaft Details" sheets.
2. For railing and safety handrail details, see "Tower Access Details No. 8" sheet.
3. For additional access details in tower base, see "Tower Access Details No. 2" sheet.
4. For ladder details not shown, see "Tower Access Details No. 7" sheet.
5. For access opening details, see Detail E on "Tower Access Details No. 8" sheet. For cover details, see "Tower Access Details No. 9" sheet.
6. For strut facade, see "Tower Strut Facade Details" sheets.
7. For location of access openings in tower head, see "Tower Head Details" sheets.
8. For access opening and door details, see "Tower Access Detail No. 4" sheet. Access openings are without door unless noted otherwise.
9. For Section D-D and E-E, see "Tower Access Details No. 3" sheet.
10. For Top Platform Types 1 and 2, see "Tower Access Detail No. 9" sheet.
11. For Section F-F, see "Tower Access Details No. 10" sheet.
12. For walkway grating and support beam, see "Tower Access Details No. 3" sheet.
13. For access opening cover details, see "Tower Access Details No. 9" sheet.
14. For location of access openings in strut facade, see "Tower Strut Facade Details" sheets.
15. For location of saddle access opening and ladder, see "Tower Saddle Housing Details" sheets.
16. At locations where ladder lengths exceed 6.5 meters, contraction joints shall be provided. Ladder length is defined as the distance between the centerlines of the top and bottom end supports. Contraction joints shall be located below ladder supports unless noted otherwise. For contraction joint details, see "Tower Access Details No. 7" sheet.
17. Ladder supports shall be spaced at 6 meters maximum.
18. For ladder, railing and safety handrail, and top platform details not shown, see "Tower Access Details No. 1A" sheet.
19. Provide additional access openings at locations shown. 5

CONTRACT CHANGE ORDER NO. ____
SHEET ____ OF ____

REQUESTS FOR INFORMATION NOT ADDRESSED IN THIS CCO REMAIN IN FORCE

MARK	DATE	DESCRIPTIONS	BY	CH'D	CCO#
5	08/19/11	ELEVATOR DETAILS	NV	MN	85
4	10/29/10	DOORS AND LADDER CAGES	NV	MN	118
3	10/22/10	TOWER HEAD DETAILS	NV	MN	93
2	07/17/09	ELEVATOR DETAILS	TH	MN	85
1	07/18/08	TOWER ACCESS	NV	MN	65

REVISIONS

R. Valizadeh/V. Toan/Y.L./W.L./F.C.
DESIGN OVERSIGHT
SIGN OFF DATE 08/19/11

	BY	CHECKED
DESIGN	M. Nader	M. Gulyas
DETAILS	G. Baker	L. Rus
QUANTITIES	D. Turner	J. Leventini

PREPARED FOR THE STATE OF CALIFORNIA DEPARTMENT OF TRANSPORTATION

R. Manzanarez
PROJECT ENGINEER

BRIDGE NO. 34-0006L/R
KILOMETER POST 13.2/13.9

SAN FRANCISCO OAKLAND BAY BRIDGE
EAST SPAN SEISMIC SAFETY PROJECT
SELF-ANCHORED SUSPENSION BRIDGE
(SUPERSTRUCTURE & TOWER)

TOWER ACCESS DETAILS NO. 1

Rev. Date: 5-18-98

ORIGINAL SCALE IN MILLIMETERS FOR REDUCED PLANS 0 10 20 30 40 50 60 70 80 90 100

CU 04
EA 0120F1

DISREGARD PRINTS BEARING EARLIER REVISION DATES

REVISION DATES (PRELIMINARY STAGE ONLY): 05/15/99 08/02/99 05/31/01 04/08/02 07/01/02 12/18/02 10/12/04

SHEET 500R5 OF

FILE => I:\bb\04-012001\sas\contract plans and cco\cco\cco#85\4-revision 08-19-11\dgn\akacc06.dgn

USERNAME => DWinrow DATE PLOTTED => 19 AUG 2011 TIME PLOTTED => 14:25:58

100 % PS&E

DIST.	COUNTY	ROUTE	KILOMETER POST TOTAL PROJECT	SHEET NO.	TOTAL SHEETS
04	SF	80	13.2/13.9	919R2	1204

REGISTERED ENGINEER - CIVIL

12-6-04
PLANS APPROVAL DATE

REGISTERED PROFESSIONAL ENGINEER Marwan N. Nader No. C 054426 Exp. 12/31/09 CIVIL STATE OF CALIFORNIA

The State of California or its officers or agents shall not be responsible for the accuracy or completeness of electronic copies of this plan sheet.

T.Y. LIN / MOFFATT & NICHOL
825 BATTERY STREET
SAN FRANCISCO, CA 94111

Caltrans now has a web site! To get to the web site, go to: http://www.dot.ca.gov

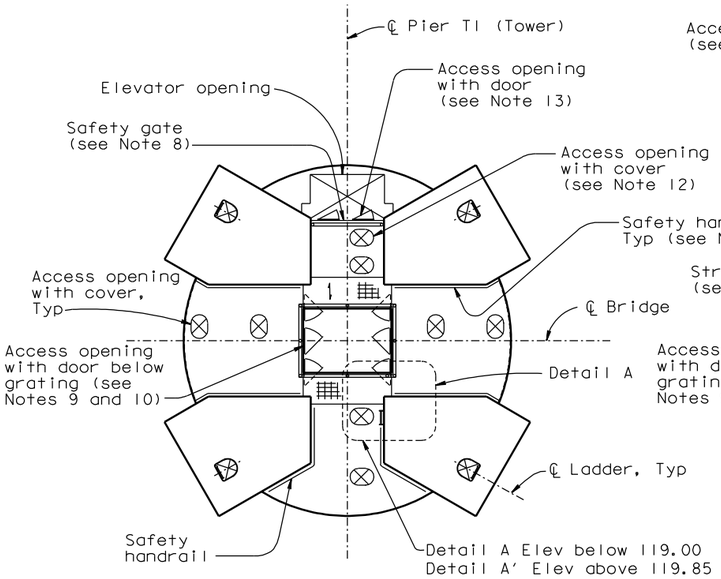

SECTION D-D
NTS

Typical for all tower strut facades UNO in Section E-E. Facade Type A is shown. Type B similar (see Notes 5 and 10)

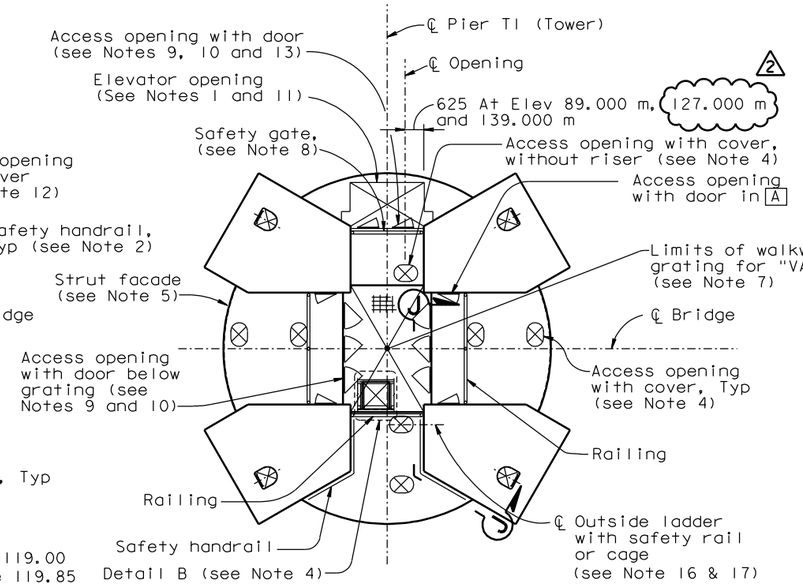

SECTION E-E
NTS

(Shown for tower strut facade corresponding to tower strut at Elev 139.000 m, safety gates and door locations at Elev 53.000 m, 89.000 m and 127.000 m are similar)

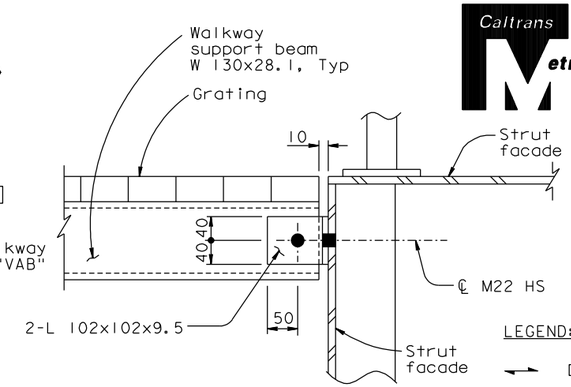

SECTION G-G
1:5

(Section G'-G' similar)

LEGEND:

- Direction of main reinforcement of grating
- Access opening
- A — Tower shaft skin plate A

NOTES:

1. For elevator opening details, see "Tower Strut Facade Details" sheets.
2. For railing and safety handrail details, see "Tower Access Details No. 8" sheet.
3. For ladder details not shown, see "Tower Access Details No. 7" sheet.
4. For Detail B and access cover details, see "Tower Access Details No. 9" sheet. All covers are with risers, unless noted otherwise.
5. For strut facade, see "Tower Strut Facade Details" sheets.
6. Galvanized steel grating with fasteners to be provided by Contractor. Grating working load shall be 4.8 kN/m² (100psf) unless noted otherwise.
7. Gratings at elevations 53.000, 89.000 and 139.000 shall support "VAB" equipment, to be supplied by others. Walkway grating for "VAB" shall be galvanized steel grating with fasteners to be provided by Contractor. Grating working load shall be 14.8 kN/m² (300psf).
8. For Safety gate details, see "Road Plans" sheets.
9. For access opening and door details, see "Tower Access Details No. 4" sheet. Access openings are without door unless noted otherwise.
10. For location of access openings in strut facade, see "Tower Strut Facade Details" sheets.
11. For location of elevator landing and safety enclosures, see "Tower Elevator Support Details" sheets.
12. This access opening is to be provided in strut facades from elevation 18.000 m to 77.000 m only.
13. These access openings are to be provided between elevation 89.000 m to 143.000 m.
14. For bottom face access opening provide door to swing in. Door shall open clear of obstructions. For other details, see door at vertical face of tower strut facade on "Tower Access Details No. 4" sheet.
15. The Contractor shall provide ladders inside the front facades to align with the exterior ladder segments. Ladder do not penetrate the strut facade plates.
16. At locations where ladder lengths exceed 6.5 meters, contraction joints shall be provided. Ladder length is defined as the distance between the centerlines of the top and bottom end supports. Contraction joints shall be located below ladder supports unless noted otherwise. For contraction joint details, see "Tower Access Details No. 7" sheet.
17. Ladder supports shall be spaced at 6 meters maximum.
18. For Section Z-Z and Detail A', see "Tower Access Details No. 3A" sheet.

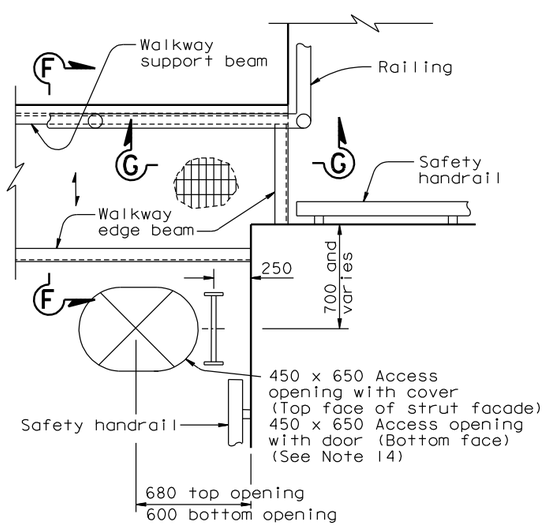

DETAIL A
1:20

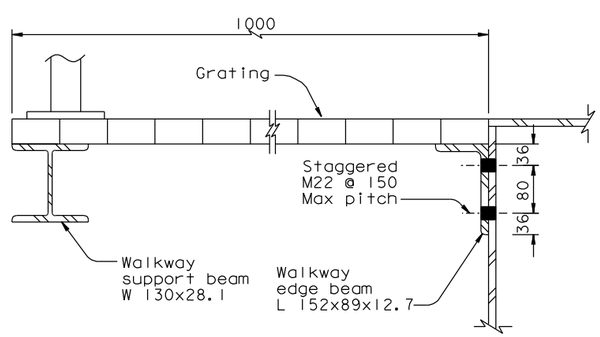

SECTION F-F
1:5

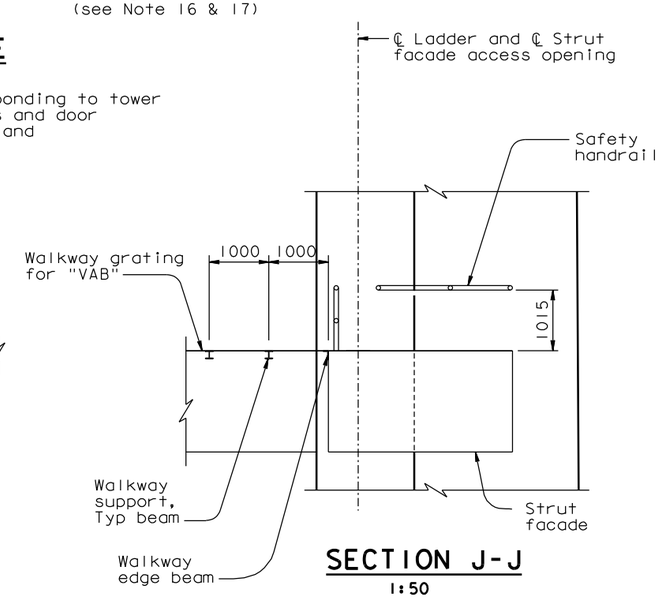

SECTION J-J
1:50

CONTRACT CHANGE ORDER NO. ____
SHEET ___ OF ___

REQUESTS FOR INFORMATION NOT ADDRESSED IN THIS CCO REMAIN IN FORCE

ALL DIMENSIONS ARE IN MILLIMETERS UNLESS OTHERWISE SHOWN

MARK	DATE	DESCRIPTIONS	BY	CH'D	CCO#
2	07/17/09	ELEVATOR DETAILS	TH	MN	85
1	07/18/08	TOWER ACCESS	NV	MN	65

REVISIONS

R. Valizadeh/V. Toan/Y.L./W.L./F.C.
DESIGN OVERSIGHT
SIGN OFF DATE 07/17/09

DESIGN BY M. Nader CHECKED M. Gulyas
DETAILS BY G. Baker CHECKED L. Rus
QUANTITIES BY D. Turner CHECKED J. Leventini

PREPARED FOR THE STATE OF CALIFORNIA DEPARTMENT OF TRANSPORTATION

R. Manzanarez
PROJECT ENGINEER

BRIDGE NO. 34-0006L/R
KILOMETER POST 13.2/13.9

SAN FRANCISCO OAKLAND BAY BRIDGE
EAST SPAN SEISMIC SAFETY PROJECT
SELF-ANCHORED SUSPENSION BRIDGE
(SUPERSTRUCTURE & TOWER)

TOWER ACCESS DETAILS NO. 3

Rev. Date: 5-18-98

ORIGINAL SCALE IN MILLIMETERS FOR REDUCED PLANS 0 10 20 30 40 50 60 70 80 90 100

CU 04
EA 0120F1

DISREGARD PRINTS BEARING EARLIER REVISION DATES

REVISION DATES (PRELIMINARY STAGE ONLY) 05/15/99 08/02/99 05/31/01 04/08/02 07/29/02 12/19/02

SHEET 502R2 OF

FILE => I:\bb\04-012001\sas\contract plans and cco\cco\cco#85\2-revision 07-17-09\dgn\akacc14.dgn

100% PS&E

USERNAME => dwinrow DATE PLOTTED => 17 JUL 2009 TIME PLOTTED => 15:25:17

DIST.	COUNTY	ROUTE	KILOMETER POST TOTAL PROJECT	SHEET NO.	TOTAL SHEETS
04	SF	80	13.2/13.9	939R3	1204

George Baker
REGISTERED ENGINEER - CIVIL
12-6-04
PLANS APPROVAL DATE

REGISTERED PROFESSIONAL ENGINEER George S. Baker No. C 57112 Exp. 12/31/05 CIVIL STATE OF CALIFORNIA

The State of California or its officers or agents shall not be responsible for the accuracy or completeness of electronic copies of this plan sheet.

T.Y. LIN / MOFFATT & NICHOL
825 BATTERY STREET
SAN FRANCISCO, CA 94111

Caltrans now has a web site! To get to the web site, go to: http://www.dot.ca.gov

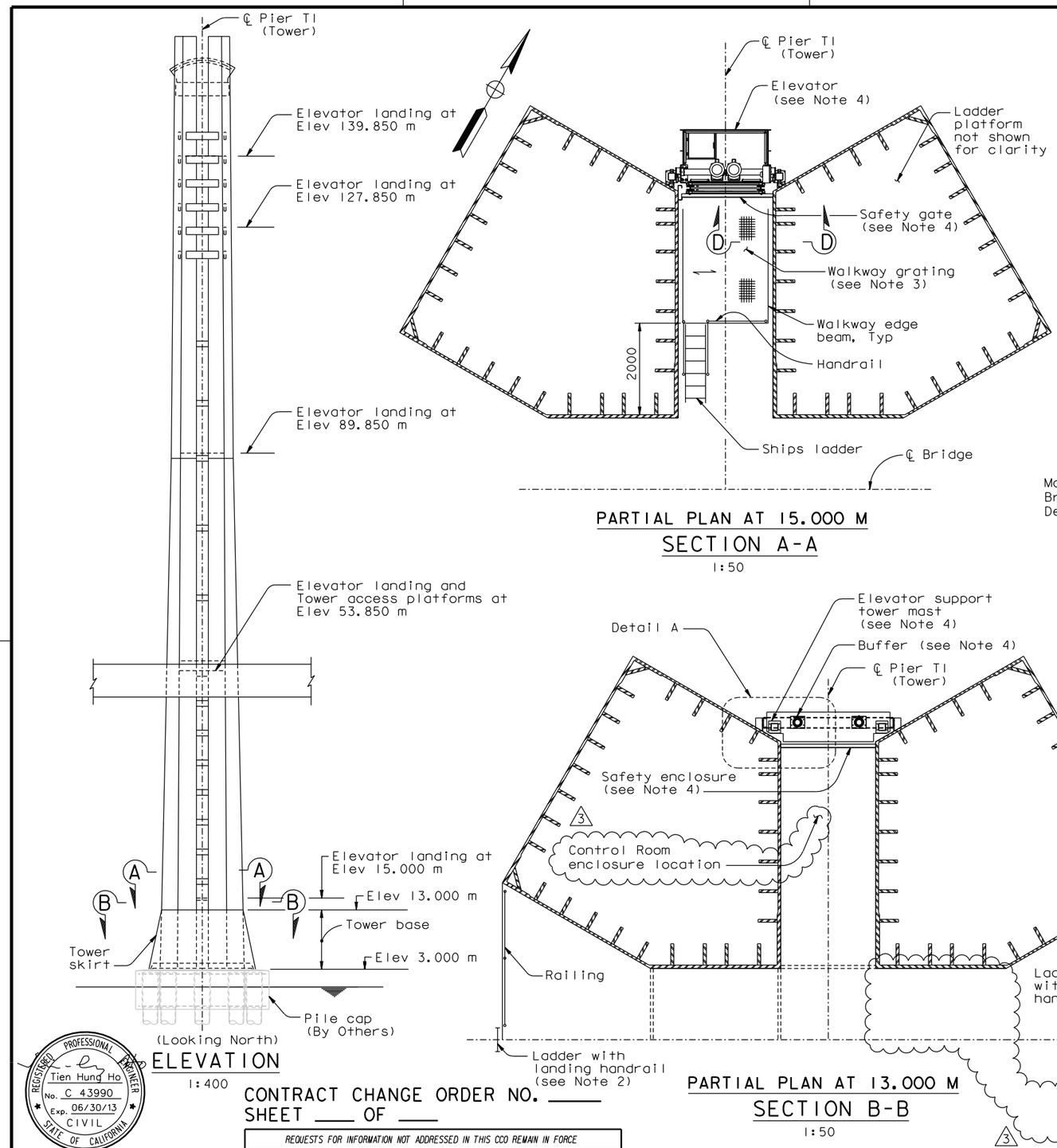

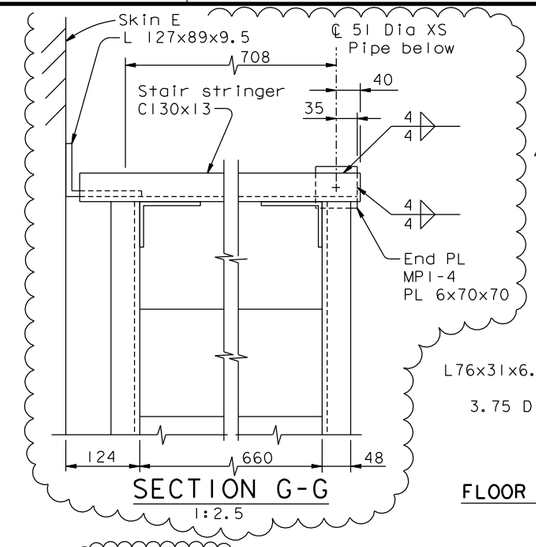

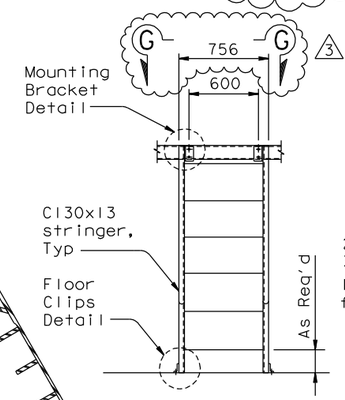

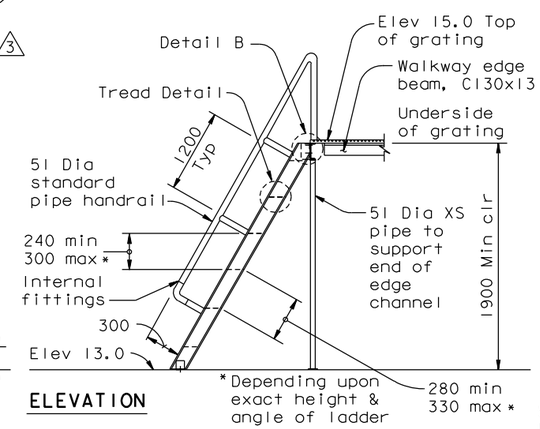

SHIPS LADDER DETAILS
1:25

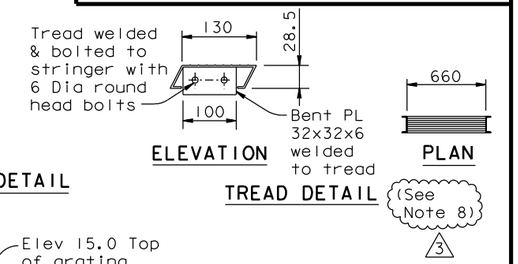

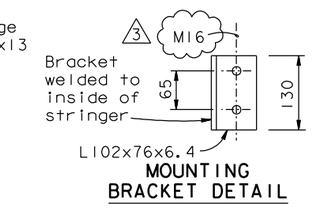

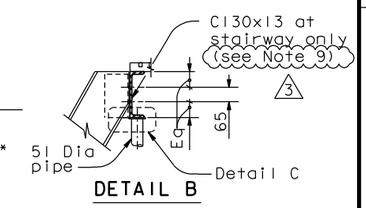

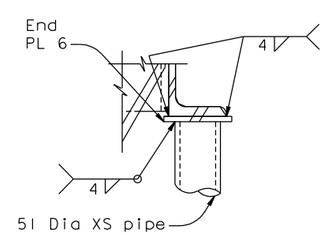

NOTES:

1. For elevator landing details at elevations 139.850 and 89.850, see "Tower Access Details No.3" sheet.
2. For ladder and landing handrail details, see "Tower Access Details No.7" sheet. For railing details, see Tower Access Details No.8" sheet.
3. Gratings at elevation 15.000 shall have a working load of 7 kN/m (145psf).
4. For elevator and elevator appurtenances, see "Road Plans" sheets.
5. (NOTE DELETED)
6. For elevator landing details at elevation 53.850, see "Tower Access Details No.10" sheet.
7. For Detail A, Section C-C and Section D-D, see "Tower Elevator Support Details No.2" sheet.
8. At the Contractor's option, stair treads may be C130x13. The top outward facing corner of each channel shall be ground to radius of 3 mm. Tread shall be provided with a slip-resistant surface.
9. At the Contractor's option, C130x10.4 may be used for the platform grating support beam at top of stairway only.

REGISTERED PROFESSIONAL ENGINEER Tien Hung Ho No. C 43990 Exp. 06/30/13 CIVIL STATE OF CALIFORNIA

FOR REVISIONS ONLY

CONTRACT CHANGE ORDER NO. ____
SHEET ____ OF ____

REQUESTS FOR INFORMATION NOT ADDRESSED IN THIS CCO REMAIN IN FORCE

MARK	DATE	DESCRIPTIONS	BY	CH'D	CCO#
3	08/19/11	ELEVATOR DETAILS	TH	MN	85
2	10/15/10	HANDRAIL AND PLATFORMS	TH	MN	114
1	07/17/09	ELEVATOR DETAILS	TH	MN	85

REVISIONS

R. Valizadeh/V. Toan/Y.L./W.L./F.C.
DESIGN OVERSIGHT
Y. Liu
SIGN OFF DATE 08/19/11

	BY	CHECKED
DESIGN	G. Baker	L. Rus
DETAILS	S. Camo	L. Rus
QUANTITIES	D. Turner	J. Leventini

PREPARED FOR THE STATE OF CALIFORNIA DEPARTMENT OF TRANSPORTATION

R. Manzanarez
PROJECT ENGINEER

ALL DIMENSIONS ARE IN MILLIMETERS UNLESS OTHERWISE SHOWN

BRIDGE NO. 34-0006L/R
KILOMETER POST 13.2/13.9

SAN FRANCISCO OAKLAND BAY BRIDGE
EAST SPAN SEISMIC SAFETY PROJECT
SELF-ANCHORED SUSPENSION BRIDGE
(SUPERSTRUCTURE & TOWER)

TOWER ELEVATOR SUPPORT DETAILS NO. 1

Rev. Date: 5-18-98

ORIGINAL SCALE IN MILLIMETERS FOR REDUCED PLANS 0 10 20 30 40 50 60 70 80 90 100

CU 04
EA 0120F1

DISREGARD PRINTS BEARING EARLIER REVISION DATES 04/08/02 07/01/02 12/19/02 11/13/05

SHEET 522R3 OF

FILE => I:\bb\04-012001\sas\contract plans and cco\cco\cco#85\4-revision 08-19-11\dgn\akele01.dgn

USERNAME => DWinrow DATE PLOTTED => 19 AUG 2011 TIME PLOTTED => 14:27:53

100 % PS&E

DIST.	COUNTY	ROUTE	KILOMETER POST TOTAL PROJECT	SHEET NO.	TOTAL SHEETS
04	SF	80	13.2/13.9	940R2	1204

Caltrans Metric

George Baker
REGISTERED ENGINEER - CIVIL
12-6-04
PLANS APPROVAL DATE

REGISTERED PROFESSIONAL ENGINEER George S. Baker No. C 57112 Exp. 12/31/05 CIVIL STATE OF CALIFORNIA

The State of California or its officers or agents shall not be responsible for the accuracy or completeness of electronic copies of this plan sheet.

T.Y. LIN / MOFFATT & NICHOL
825 BATTERY STREET
SAN FRANCISCO, CA 94111

Caltrans now has a web site! To get to the web site, go to: http://www.dot.ca.gov

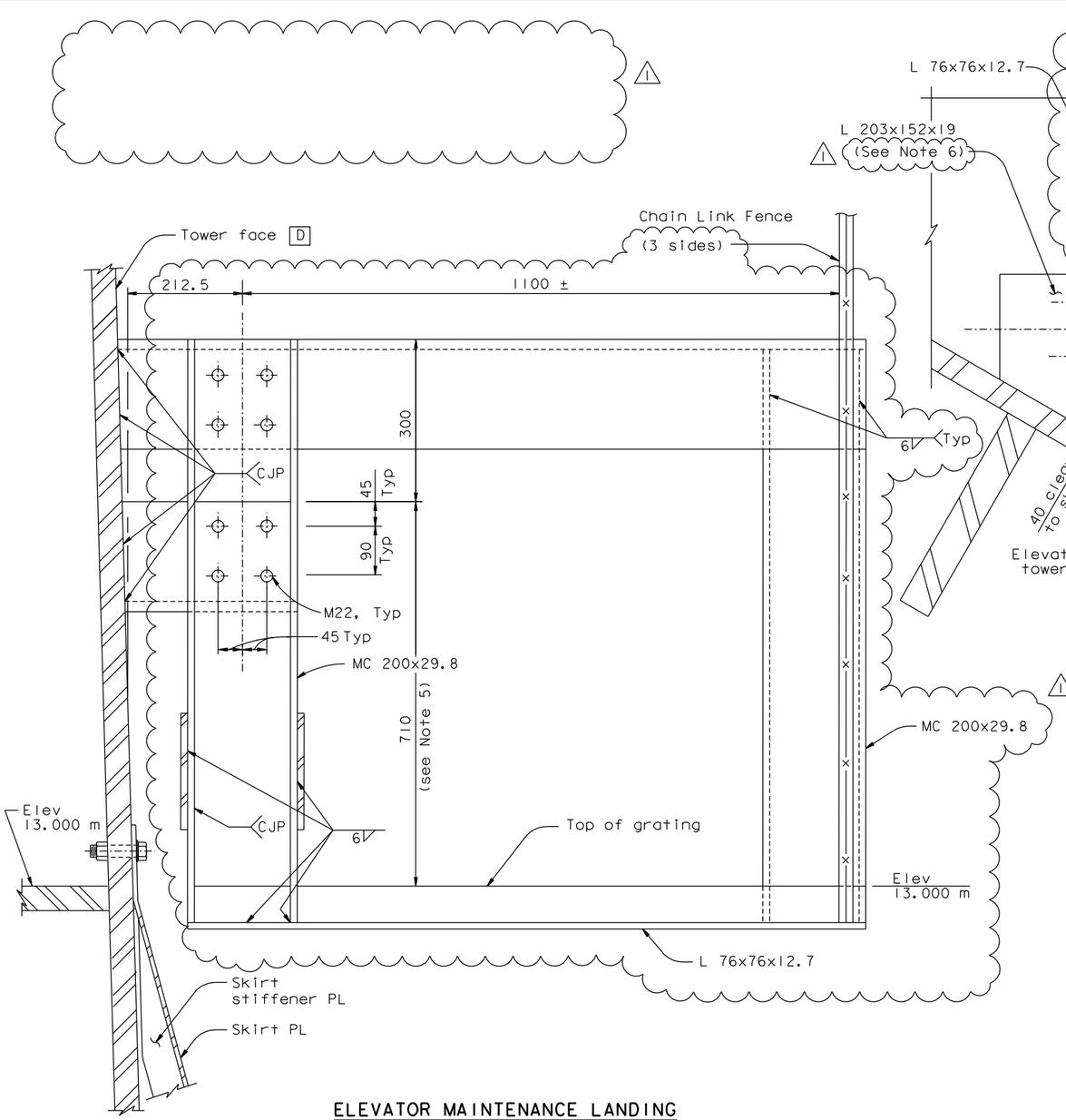

ELEVATOR MAINTENANCE LANDING

SECTION E-E
1:5

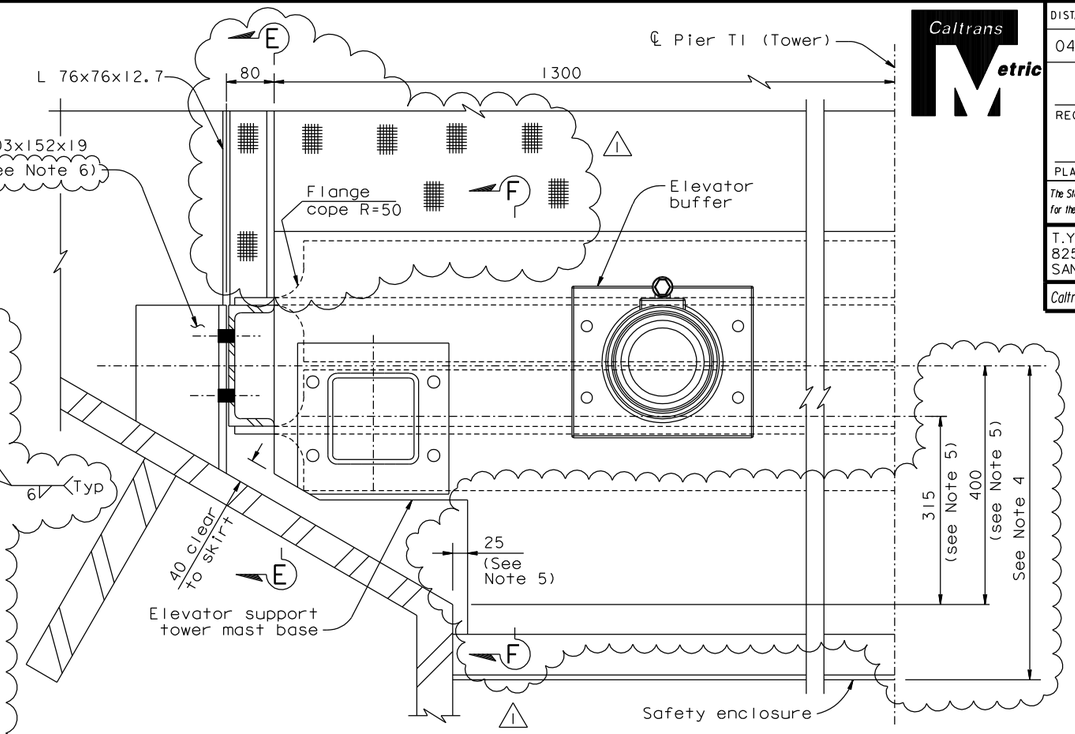

DETAIL A
1:5

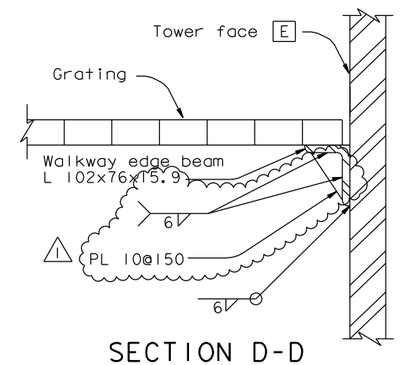

SECTION D-D
1:5

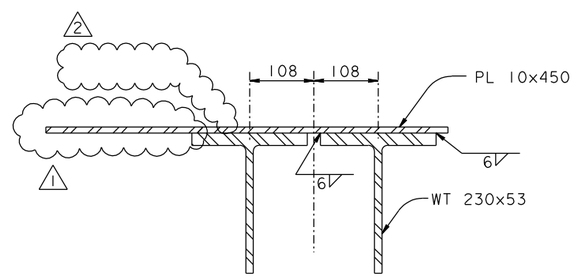

SECTION F-F
1:5

NOTES:

1. For elevator support tower mast and elevator buffer details, see "Road Plans" sheets.
2. For elevator landing details, see "Tower Access Details" sheets.
3. For base details and fasteners, see "Road Plans" sheets.
4. Dimension is dependent on elevator system selected by the Contractor.
5. The Contractor shall coordinate dimensions with elevator manufacturer.
6. The Contractor may use built-up shape with CJP in lieu of L 203x152x19, subject to review and approval of the Engineer.

REGISTERED PROFESSIONAL ENGINEER Tien Hung Ho No. C 43990 Exp. 06/30/13 CIVIL STATE OF CALIFORNIA

FOR REVISIONS ONLY

CONTRACT CHANGE ORDER NO. _____
SHEET ___ OF ___

REQUESTS FOR INFORMATION NOT ADDRESSED IN THIS CCO REMAIN IN FORCE

ALL DIMENSIONS ARE IN MILLIMETERS UNLESS OTHERWISE SHOWN

R. Valizadeh/V. Toan/Y.L./W.L./F.C.
DESIGN OVERSIGHT
Raya Valizadeh / Vong Toan / Y. Liu
SIGN OFF DATE 08/26/11

MARK	DATE	DESCRIPTIONS	BY	CH'D	CCO#
2	08/26/11	ELEVATOR DETAILS	TH	MN	85
1	07/17/09	ELEVATOR DETAILS	TH	MN	85

REVISIONS

DESIGN	BY G. Baker	CHECKED L. Rus	
DETAILS	BY S. Camo	CHECKED L. Rus	
QUANTITIES	BY D. Turner	CHECKED J. Leventini	

PREPARED FOR THE STATE OF CALIFORNIA DEPARTMENT OF TRANSPORTATION

R. Manzanarez
PROJECT ENGINEER

BRIDGE NO. 34-0006L/R
KILOMETER POST 13.2/13.9

SAN FRANCISCO OAKLAND BAY BRIDGE
EAST SPAN SEISMIC SAFETY PROJECT
SELF-ANCHORED SUSPENSION BRIDGE
(SUPERSTRUCTURE & TOWER)

TOWER ELEVATOR SUPPORT DETAILS NO. 2

Rev. Date: 5-18-98

ORIGINAL SCALE IN MILLIMETERS FOR REDUCED PLANS 0 10 20 30 40 50 60 70 80 90 100

CU 04
EA 0120F1

DISREGARD PRINTS BEARING EARLIER REVISION DATES → 04/26/02 01/01/02 12/19/02

SHEET 523R2 OF

FILE => I:\bb\04-012001\sas\contract plans and cco\cco\cco*85\5-update 08-26-11\dgn\akele02.dgn

USERNAME => DWinrow DATE PLOTTED => 26 AUG 2011 TIME PLOTTED => 10:00:55

100% PS&E

DIST.	COUNTY	ROUTE	KILOMETER POST TOTAL PROJECT	SHEET NO.	TOTAL SHEETS
04	SF	80	13.2/13.9	940SIRI	1204

Caltrans Metric

REGISTERED ENGINEER - CIVIL

08-26-11
PLANS APPROVAL DATE

REGISTERED PROFESSIONAL ENGINEER Tien Hung Ho No. C 43990 Exp. 06/30/13 CIVIL STATE OF CALIFORNIA

The State of California or its officers or agents shall not be responsible for the accuracy or completeness of electronic copies of this plan sheet.

T.Y. LIN / MOFFATT & NICHOL
825 BATTERY STREET
SAN FRANCISCO, CA 94111

Caltrans now has a web site! To get to the web site, go to: http://www.dot.ca.gov

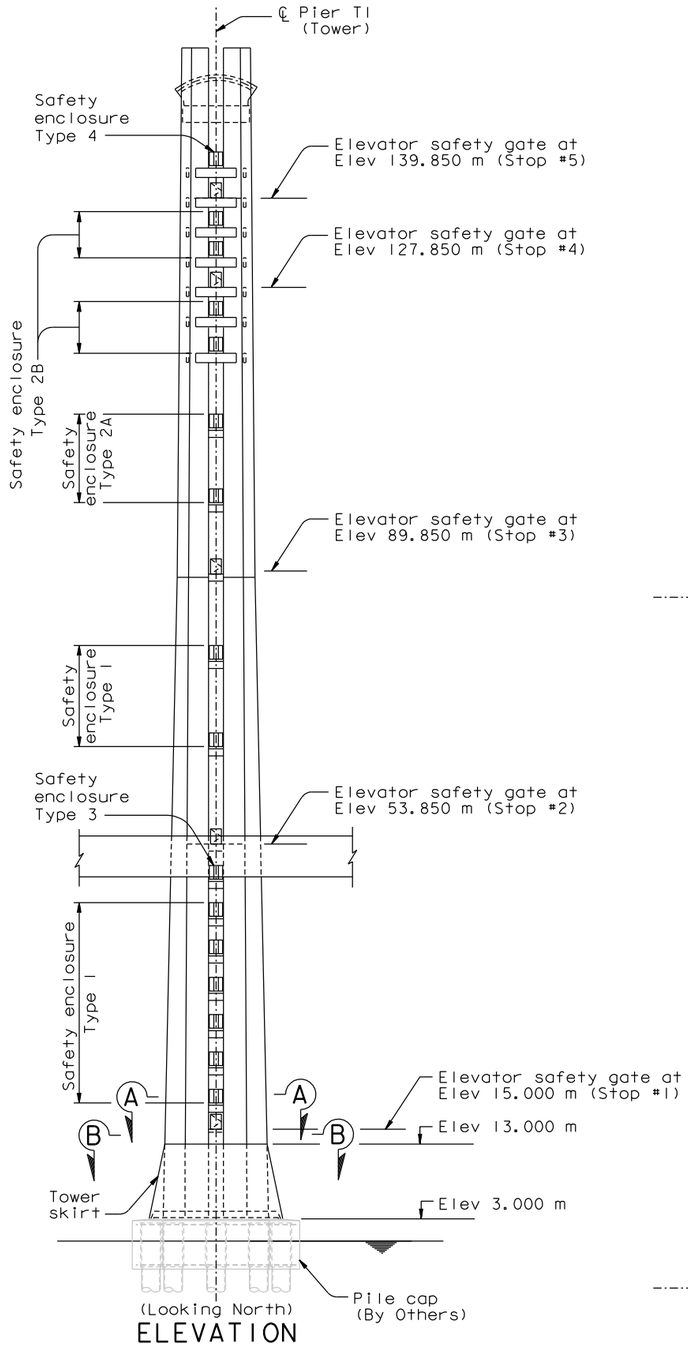

(Looking North)

ELEVATION

1:400

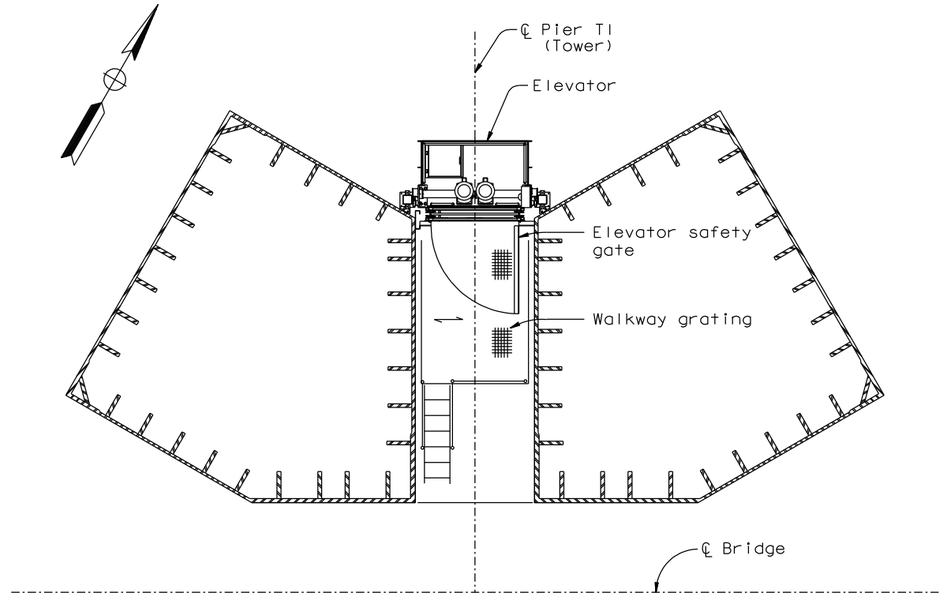

PARTIAL PLAN AT 15.000 M

SECTION A-A

1:50

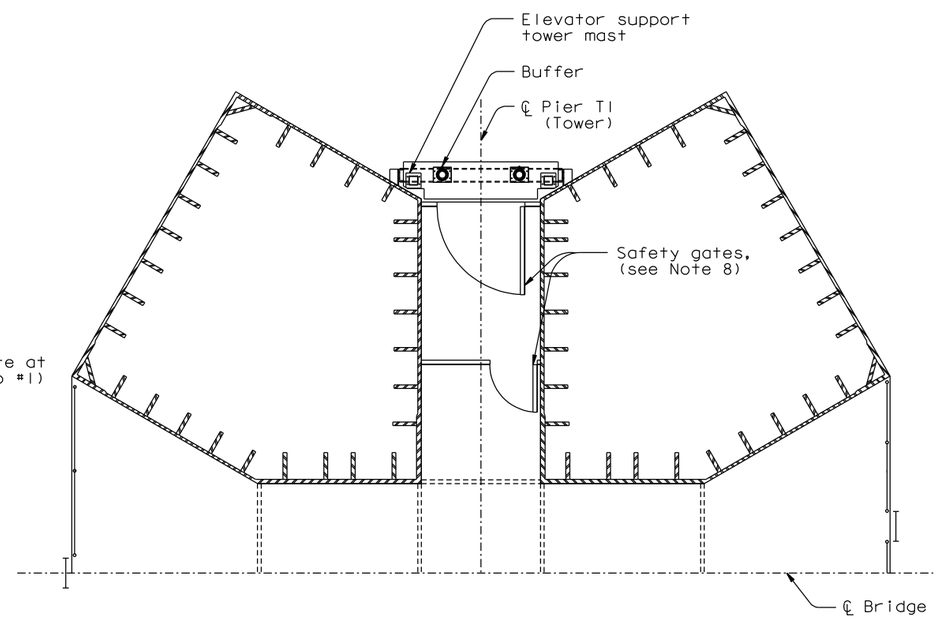

PARTIAL PLAN AT 13.000 M

SECTION B-B

1:50

NOTES:

1. For elevator safety gate details, see "Tower Elevator Enclosure Details No. 2" sheet.
2. For elevator safety enclosure details, see "Tower Elevator Enclosure Details No.3" sheet.
3. All ~~carbon~~ WT sections and plates shall be (galvanized) structural steel A709M Grade 345. All components for elevator safety gates and elevator safety enclosures shall be powder coated black.
4. ~~Welded wire~~ mesh shall be of 4 mm (5/32 inch) Dia (galvanized) steel wires complete with (1"x 1"x16 gauge) U-band frames, powder coated black, by Flynn Enslow or equivalent.
5. Cables shall be 3.2 mm (1/8 inch) diameter 1x19 wire ropes (galvanized) steel, powder coated black, by (Cable Moore) or equivalent. Cables shall be tensioned to 350 pound force maximum at both ends with ( ) Tuner Turnbuckle tensioners by (Cable Moore) or equivalent.
6. Gate hinges shall be 120 mm weld-on fixed hinge pin stainless steel #SSWM048FP, powder coated black, by H.A.Guden or equivalent.
7. Cable/wire mesh connections shall be (galvanized) steel "Separator clamps", (powder coated black, by Cable Moore) or equivalent.
8. For safety gates at Elev 13.000 m, see "Road Plans".
9. The Contractor shall field verify the clear distance between tower shafts at all gates and enclosures elevations prior to fabrication.

CONTRACT CHANGE ORDER NO. ____
SHEET ___ OF ___

REQUESTS FOR INFORMATION NOT ADDRESSED IN THIS CCO REMAIN IN FORCE

ALL DIMENSIONS ARE IN MILLIMETERS UNLESS OTHERWISE SHOWN

R. Valizadeh/V. Toan/Y.L./W.L./F.C.
DESIGN OVERSIGHT
Roya Valizadeh / Vong Toan / Y. Liu
SIGN OFF DATE 11/03/11

MARK	DATE	DESCRIPTIONS	BY	CH'D	CCO#
1	11/03/11	ELEVATOR DETAILS	GM	TH	85
0	08/26/11	ELEVATOR DETAILS	GM	TH	85

REVISIONS

	BY	CHECKED
DESIGN	G. Mok	T. Ho
DETAILS	G. Mok	T. Ho
QUANTITIES	G. Mok	T. Ho

PREPARED FOR THE STATE OF CALIFORNIA DEPARTMENT OF TRANSPORTATION

R. Manzanarez
PROJECT ENGINEER

BRIDGE NO. 34-0006L/R
KILOMETER POST 13.2/13.9

SAN FRANCISCO OAKLAND BAY BRIDGE
EAST SPAN SEISMIC SAFETY PROJECT
SELF-ANCHORED SUSPENSION BRIDGE
(SUPERSTRUCTURE & TOWER)

TOWER ELEVATOR ENCLOSURE DETAILS NO. 1

Rev. Date: 5-18-98

ORIGINAL SCALE IN MILLIMETERS FOR REDUCED PLANS 0 10 20 30 40 50 60 70 80 90 100

CU 04
EA 0120F1

DISREGARD PRINTS BEARING EARLIER REVISION DATES 08/26/11

REVISION DATES (PRELIMINARY STAGE ONLY)

SHEET 623SIRI OF

FILE => L:\BB\04-012001\SAS\Contract Plans and CCO\CCO\CCO*85\6-Revision 11-03-11\DGN\akele03.dgn

USERNAME => oriverg DATE PLOTTED => 04 NOV 2011 TIME PLOTTED => 09:37:13

100 % PS&E

DIST.	COUNTY	ROUTE	KILOMETER POST TOTAL PROJECT	SHEET NO.	TOTAL SHEETS
04	SF	80	13.2/13.9	940S2R1	1204

REGISTERED ENGINEER - CIVIL

08-19-11
PLANS APPROVAL DATE

REGISTERED PROFESSIONAL ENGINEER Tien Hung Ho No. C 43990 Exp. 06/30/13 CIVIL STATE OF CALIFORNIA

The State of California or its officers or agents shall not be responsible for the accuracy or completeness of electronic copies of this plan sheet.

T.Y. LIN / MOFFATT & NICHOL
825 BATTERY STREET
SAN FRANCISCO, CA 94111

Caltrans now has a web site! To get to the web site, go to: http://www.dot.ca.gov

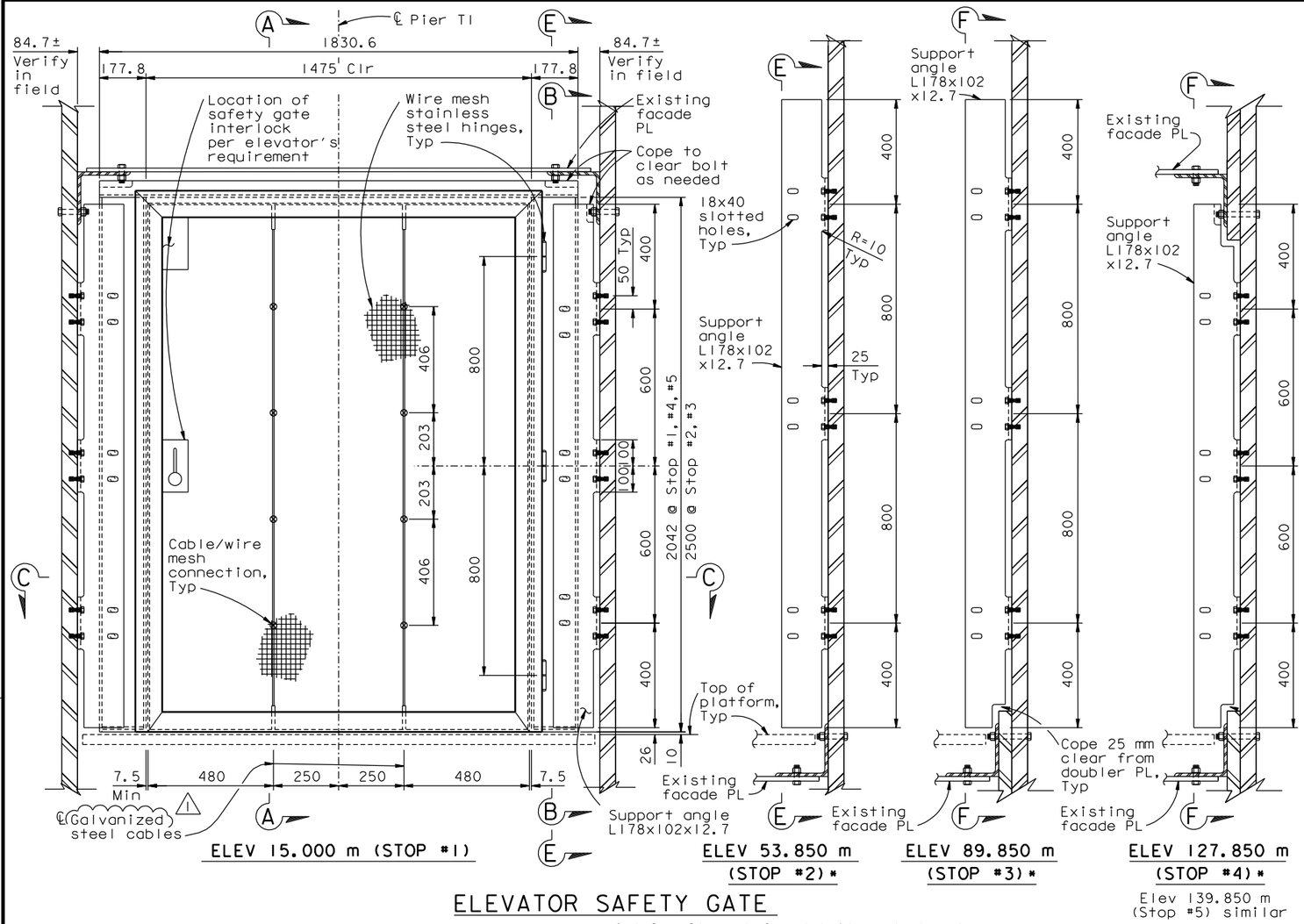

ELEVATOR SAFETY GATE

1:10 (*See Stop #1 for details not shown)
(Looking north towards elevator)

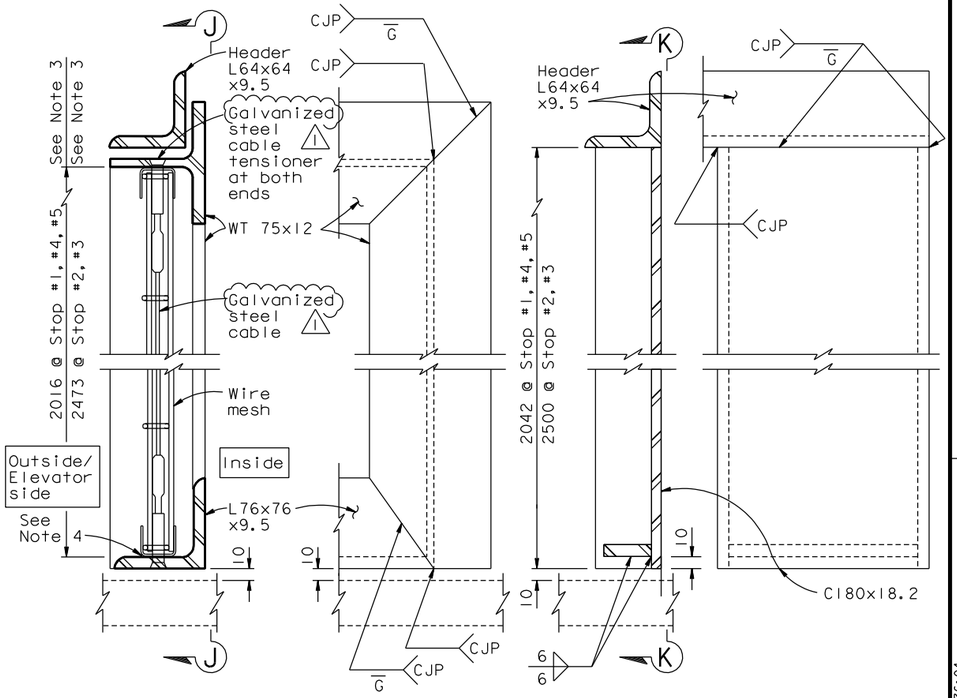

SECTION A-A
1:2.5

VIEW J-J
1:2.5
(Header not shown for clarity)

SECTION B-B
1:2.5

VIEW K-K
1:2.5
(Support angle not shown for clarity)

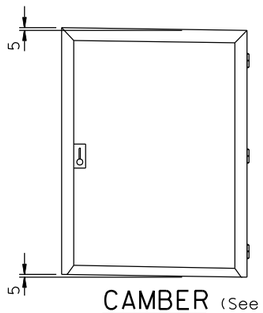

CAMBER (See Note 1)
NTS

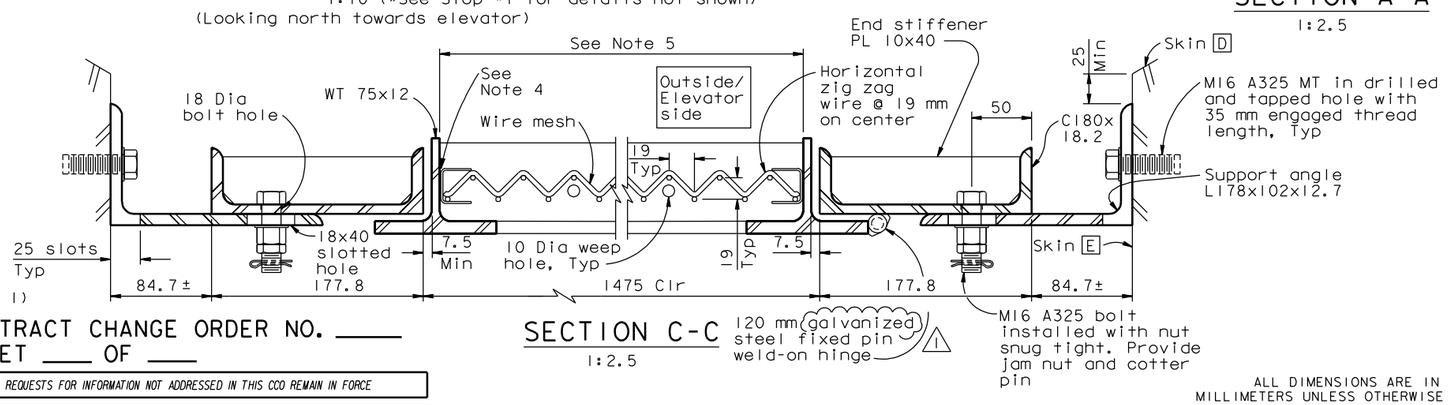

SECTION C-C
1:2.5

NOTES:

1. Provide 5 mm camber to account for self weight deflection of safety gate.
2. For Section E-E & F-F, see "Tower Elevator Enclosure Detail No.4" sheet.
3. Vertical height of steel frames shall be adjusted to receive the horizontal zigzag wires with U-band frame at top and bottom.
4. Welding of wire mesh U-band frame to steel frame shall be in accordance with wire mesh manufacturer's recommendations.
5. Width of steel frames shall be adjusted to receive the wire mesh with U-band frame.

CONTRACT CHANGE ORDER NO. _____
SHEET ____ OF ____

REQUESTS FOR INFORMATION NOT ADDRESSED IN THIS CCO REMAIN IN FORCE

ALL DIMENSIONS ARE IN MILLIMETERS UNLESS OTHERWISE SHOWN

R. Valizadeh/V. Toan/Y.L./W.L./F.C.
DESIGN OVERSIGHT
Rezo Valizadeh / Vong Toan / Y. Liu
SIGN OFF DATE 11/03/11

MARK	DATE	DESCRIPTIONS	BY	CH'D	CCO#
1	11/03/11	ELEVATOR DETAILS	GM	TH	85
0	08/19/11	ELEVATOR DETAILS	GM	TH	85

REVISIONS

	BY	CHECKED
DESIGN	G. Mok	T. Ho
DETAILS	G. Mok	T. Ho
QUANTITIES	G. Mok	T. Ho

PREPARED FOR THE STATE OF CALIFORNIA DEPARTMENT OF TRANSPORTATION

R. Manzanarez
PROJECT ENGINEER

BRIDGE NO. 34-0006L/R
KILOMETER POST 13.2/13.9

SAN FRANCISCO OAKLAND BAY BRIDGE
EAST SPAN SEISMIC SAFETY PROJECT
SELF-ANCHORED SUSPENSION BRIDGE
(SUPERSTRUCTURE & TOWER)

TOWER ELEVATOR ENCLOSURE DETAILS NO. 2

Rev. Date: 5-18-98

ORIGINAL SCALE IN MILLIMETERS FOR REDUCED PLANS 0 10 20 30 40 50 60 70 80 90 100

CU 04
EA 0120F1

DISREGARD PRINTS BEARING EARLIER REVISION DATES 08/19/11

REVISION DATES (PRELIMINARY STAGE ONLY)

SHEET 523S2R1 OF

FILE => I:\bb\04-012001\sas\contract plans and cco\cco\cco#85\6-revision 11-03-11\dgn\akele04.dgn

USERNAME => orivera DATE PLOTTED => 04 NOV 2011 TIME PLOTTED => 09:36:04

100% PS&E

DIST.	COUNTY	ROUTE	KILOMETER POST TOTAL PROJECT	SHEET NO.	TOTAL SHEETS
04	SF	80	13.2/13.9	940S3R1	1204

REGISTERED ENGINEER - CIVIL

08-19-11
PLANS APPROVAL DATE

REGISTERED PROFESSIONAL ENGINEER Tien Hung Ho No. C 43990 Exp. 06/30/13 CIVIL STATE OF CALIFORNIA

The State of California or its officers or agents shall not be responsible for the accuracy or completeness of electronic copies of this plan sheet.

T.Y. LIN / MOFFATT & NICHOL
825 BATTERY STREET
SAN FRANCISCO, CA 94111

Caltrans now has a web site! To get to the web site, go to: http://www.dot.ca.gov

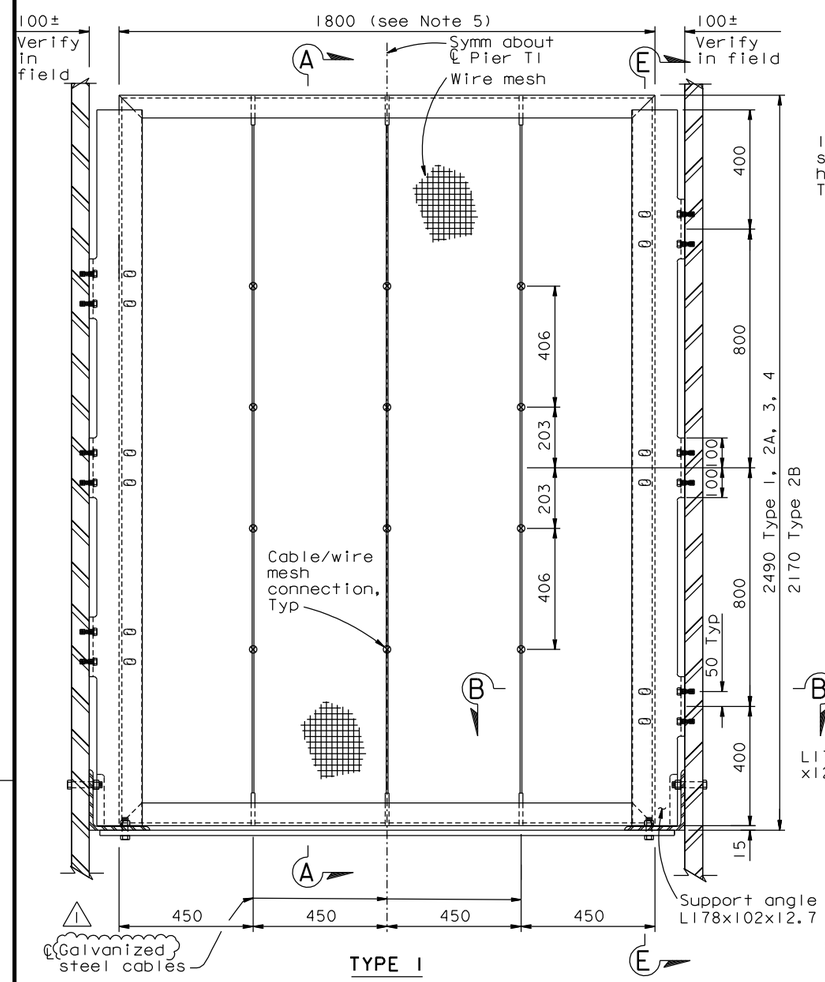

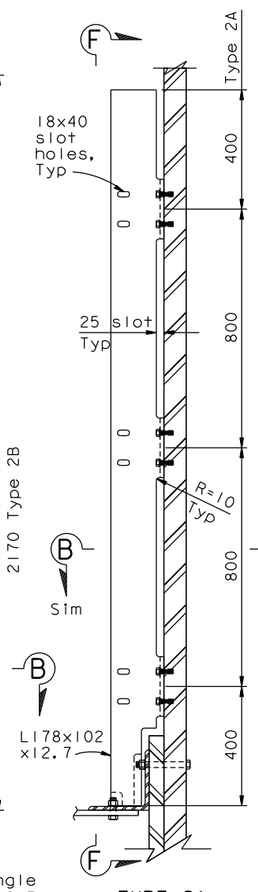

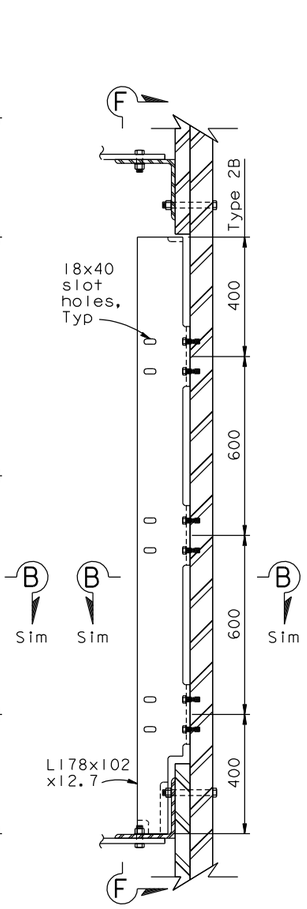

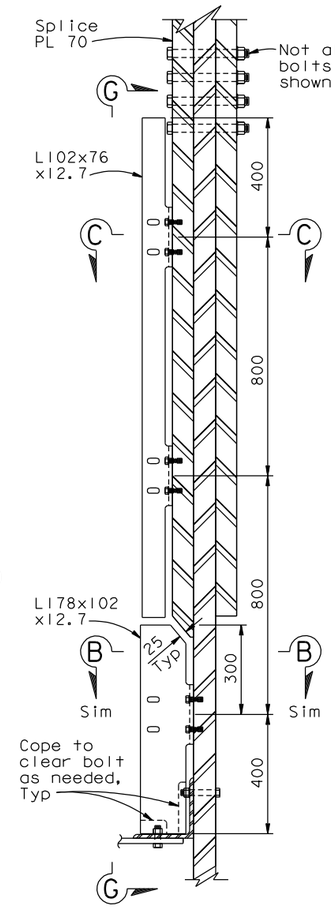

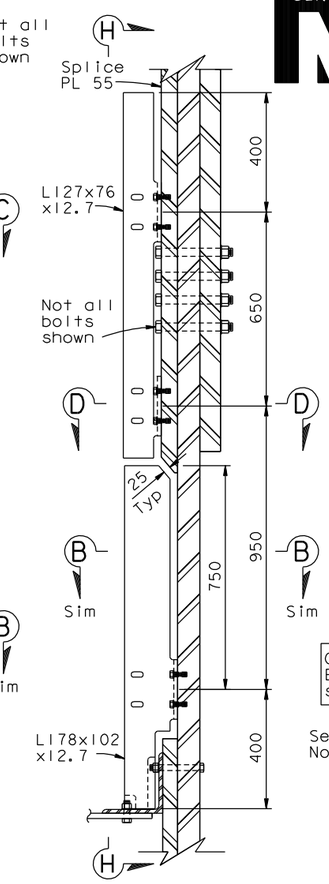

SAFETY ENCLOSURE DETAILS
1:10
(Looking north towards elevator)
(*See Type 1 for details not shown)

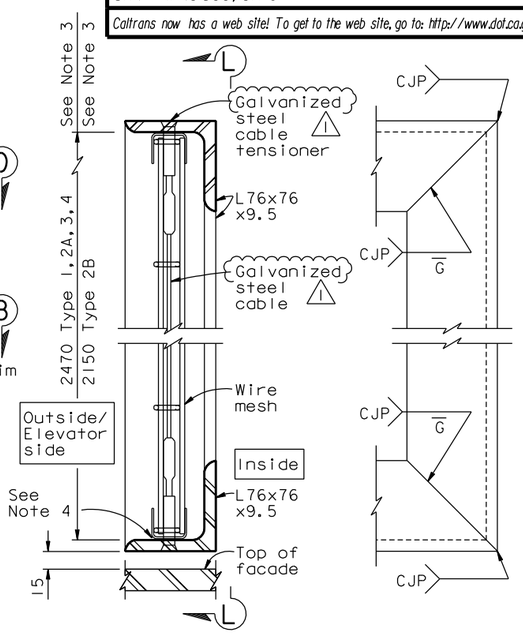

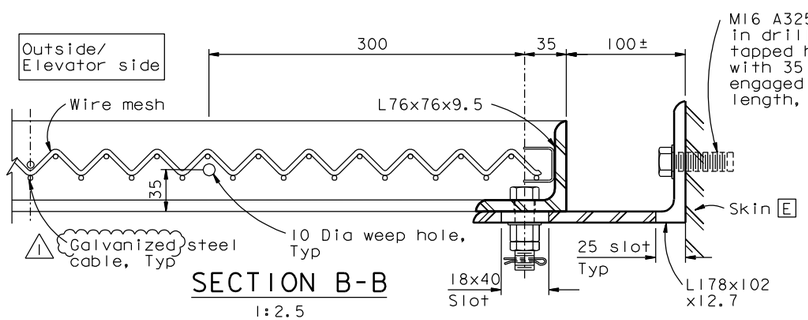

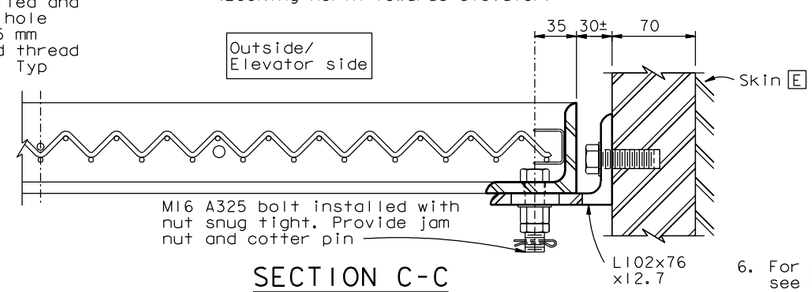

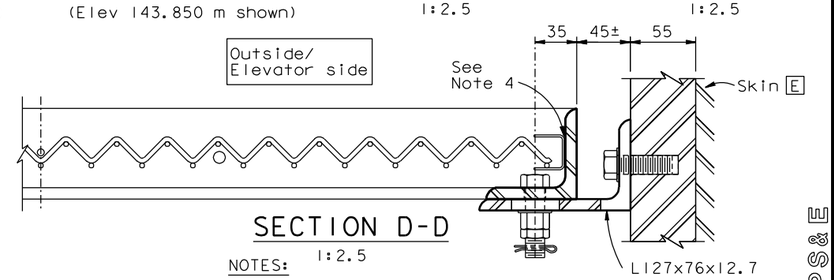

NOTES:

1. For Sections E-E, F-F, G-G, H-H, see "Tower Elevator Enclosure Details No.4" sheet.
2. Attachment of wire mesh to steel frames shall be per wire mesh manufacturer's requirements.
3. Vertical clear height of steel frames shall be adjusted to receive the wire mesh U-band frame.
4. Welding of wire mesh U-band frame to steel frame shall be in accordance with wire mesh manufacturer's recommendations.
5. Width of steel frames shall be adjusted to receive the wire mesh with U-band frame.
6. For details not shown, see "Tower Elevator Enclosure Details No.2" sheet.

CONTRACT CHANGE ORDER NO. _____
SHEET ____ OF ____

REQUESTS FOR INFORMATION NOT ADDRESSED IN THIS CCO REMAIN IN FORCE

ALL DIMENSIONS ARE IN MILLIMETERS UNLESS OTHERWISE SHOWN

R. Valizadeh/V. Toan/Y.L./W.L./F.C.
DESIGN OVERSIGHT
SIGN OFF DATE 11/03/11

MARK	DATE	DESCRIPTIONS	BY	CH'D	CCO#
1	11/03/11	ELEVATOR DETAILS	GM	TH	85
0	08/19/11	ELEVATOR DETAILS	GM	TH	85

REVISIONS

	BY	CHECKED
DESIGN	G. Mok	T. Ho
DETAILS	G. Mok	T. Ho
QUANTITIES	G. Mok	T. Ho

PREPARED FOR THE STATE OF CALIFORNIA DEPARTMENT OF TRANSPORTATION

R. Manzanarez
PROJECT ENGINEER

BRIDGE NO. 34-0006L/R
KILOMETER POST 13.2/13.9

SAN FRANCISCO OAKLAND BAY BRIDGE
EAST SPAN SEISMIC SAFETY PROJECT
SELF-ANCHORED SUSPENSION BRIDGE
(SUPERSTRUCTURE & TOWER)

TOWER ELEVATOR ENCLOSURE DETAILS NO.3

Rev. Date: 5-18-98

ORIGINAL SCALE IN MILLIMETERS FOR REDUCED PLANS 0 10 20 30 40 50 60 70 80 90 100

CU 04
EA 0120F1

DISREGARD PRINTS BEARING EARLIER REVISION DATES 08/19/11

REVISION DATES (PRELIMINARY STAGE ONLY)

SHEET 523S3R1 OF

FILE => L:\BB\04-012001\SAS\Contract Plans and CCO\CCO\CCO#85\6-Revision 11-03-11\DGN\akele05.dgn

100 % PS&E

USERNAME => arivera DATE PLOTTED => 04 NOV 2011 TIME PLOTTED => 09:38:18

DIST.	COUNTY	ROUTE	KILOMETER POST TOTAL PROJECT	SHEET NO.	TOTAL SHEETS
04	SF	80	13.2/13.9	940S4	1204

Caltrans Metric

REGISTERED ENGINEER - CIVIL

08-19-11
PLANS APPROVAL DATE

REGISTERED PROFESSIONAL ENGINEER Tien Hung Ho No. C 43990 Exp. 06/30/13 CIVIL STATE OF CALIFORNIA

The State of California or its officers or agents shall not be responsible for the accuracy or completeness of electronic copies of this plan sheet.

T.Y. LIN / MOFFATT & NICHOL
825 BATTERY STREET
SAN FRANCISCO, CA 94111

Caltrans now has a web site! To get to the web site, go to: http://www.dot.ca.gov

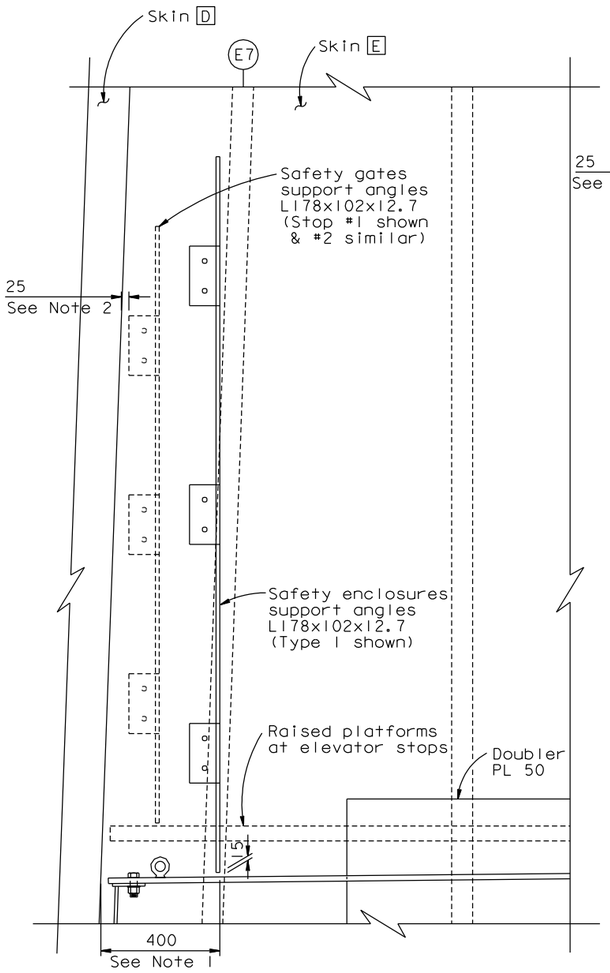

SECTION E-E (Elev 15.000 m thru Elev 77.850 m)

1:10
(North shaft shown, West shaft similar & opposite handed)

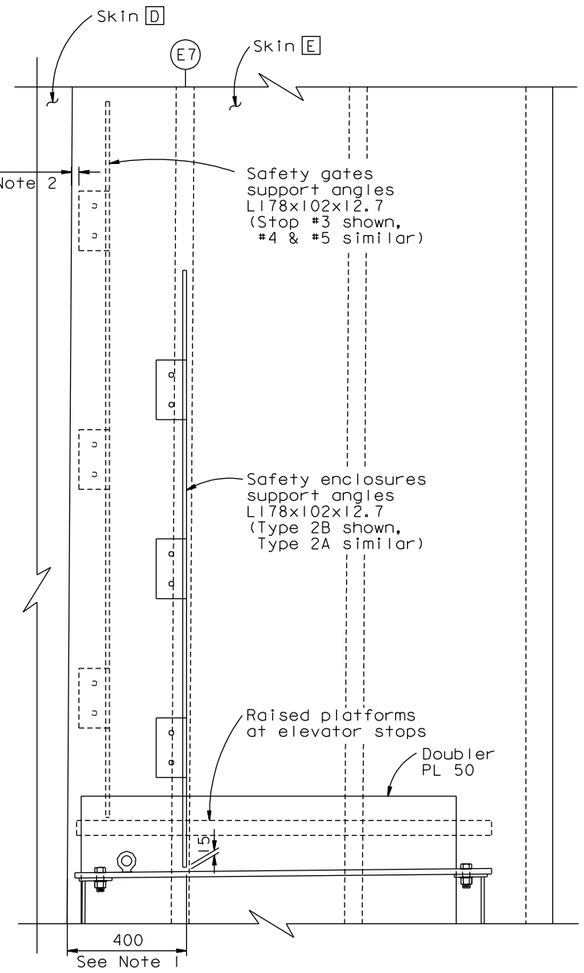

SECTION F-F (Elev 89.850 m thru Elev 139.850 m)

1:10
(North shaft shown, West shaft similar & opposite handed)

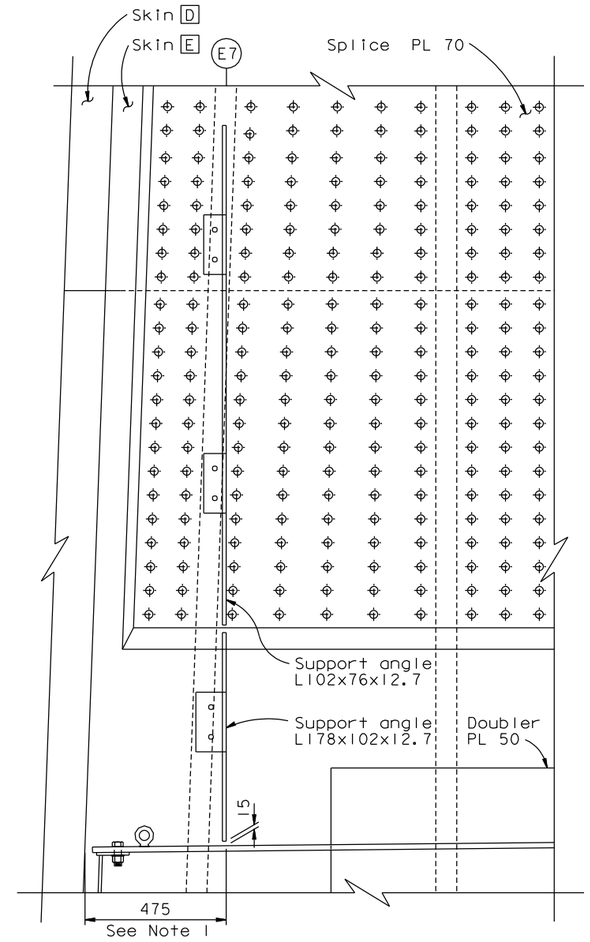

SECTION G-G (Elev 48.450 m)

1:10
(North shaft shown, West shaft similar & opposite handed)

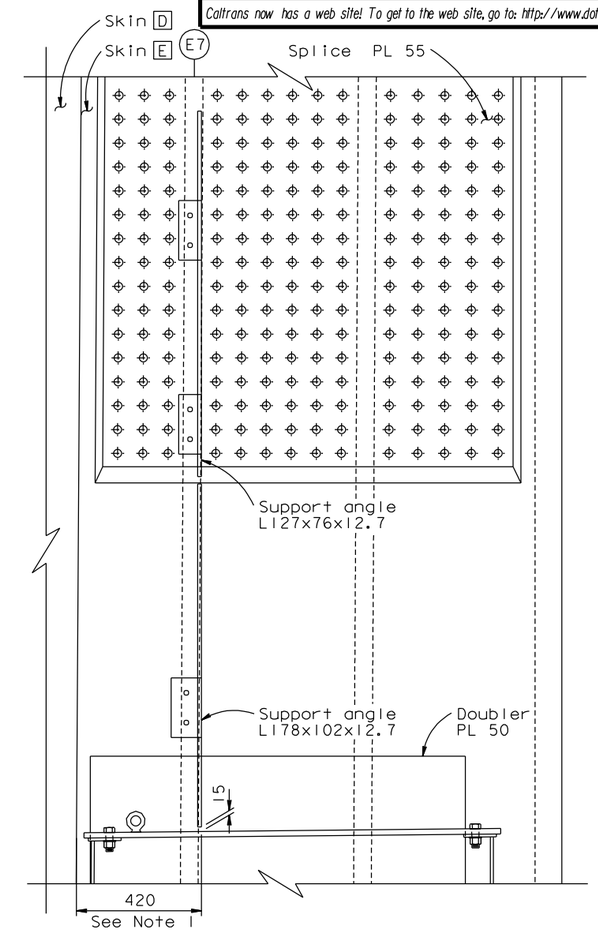

SECTION H-H (Elev 143.850 m)

1:10
(North shaft shown, West shaft similar & opposite handed)

NOTES:

1. Dimension may be adjusted to clear splice bolts, pad eyes and other interferences.
2. Dimension may be increased so that safety gate interlock will not interfere with the elevator.

CONTRACT CHANGE ORDER NO. ____
SHEET ___ OF ___

REQUESTS FOR INFORMATION NOT ADDRESSED IN THIS CCO REMAIN IN FORCE

ALL DIMENSIONS ARE IN MILLIMETERS UNLESS OTHERWISE SHOWN

R. Valizadeh/V. Toan/Y.L./W.L./F.C.
DESIGN OVERSIGHT
SIGN OFF DATE 08/19/11

MARK	DATE	DESCRIPTIONS	BY	CH'D	CCO#
0	08/19/11	ELEVATOR DETAILS	GM	TH	85

REVISIONS

	BY	CHECKED
DESIGN	G. Mok	T. Ho
DETAILS	G. Mok	T. Ho
QUANTITIES	G. Mok	T. Ho

PREPARED FOR THE STATE OF CALIFORNIA DEPARTMENT OF TRANSPORTATION

R. Manzanarez
PROJECT ENGINEER

BRIDGE NO. 34-0006L/R
KILOMETER POST 13.2/13.9

SAN FRANCISCO OAKLAND BAY BRIDGE
EAST SPAN SEISMIC SAFETY PROJECT
SELF-ANCHORED SUSPENSION BRIDGE
(SUPERSTRUCTURE & TOWER)

TOWER ELEVATOR ENCLOSURE DETAILS NO. 4

Rev. Date: 5-18-98

ORIGINAL SCALE IN MILLIMETERS FOR REDUCED PLANS 0 10 20 30 40 50 60 70 80 90 100

CU 04
EA 0120F1

DISREGARD PRINTS BEARING EARLIER REVISION DATES → 08/19/11

REVISION DATES (PRELIMINARY STAGE ONLY)

SHEET 523S4 OF

FILE => L:\BB\04-012001\SAS\Contract Plans and CCO\CCO\CCO#85\4-Revision 08-19-11\DGN\akele06.dgn

100% PS&E

USERNAME => DWinrow DATE PLOTTED => 19 AUG 2011 TIME PLOTTED => 14:41:17