DIST.	COUNTY	ROUTE	KILOMETER POST TOTAL PROJECT	SHEET NO.	TOTAL SHEETS
04	SF	80	13.2/13.9	940R2	1204

Caltrans Metric

George Baker
REGISTERED ENGINEER - CIVIL
12-6-04
PLANS APPROVAL DATE

REGISTERED PROFESSIONAL ENGINEER George S. Baker No. C 57112 Exp. 12/31/05 CIVIL STATE OF CALIFORNIA

The State of California or its officers or agents shall not be responsible for the accuracy or completeness of electronic copies of this plan sheet.

T.Y. LIN / MOFFATT & NICHOL
825 BATTERY STREET
SAN FRANCISCO, CA 94111

Caltrans now has a web site! To get to the web site, go to: http://www.dot.ca.gov

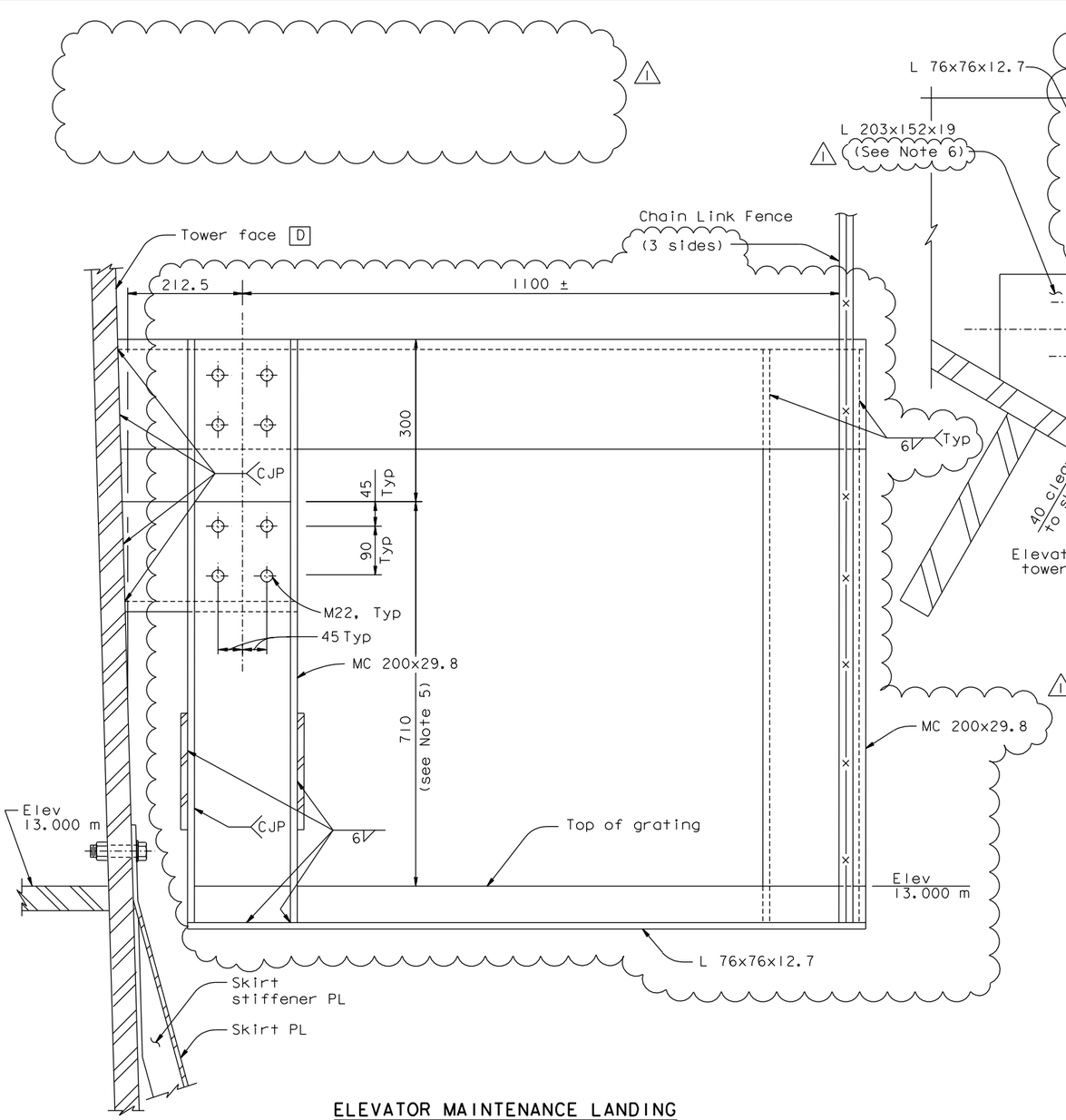

ELEVATOR MAINTENANCE LANDING

SECTION E-E
1:5

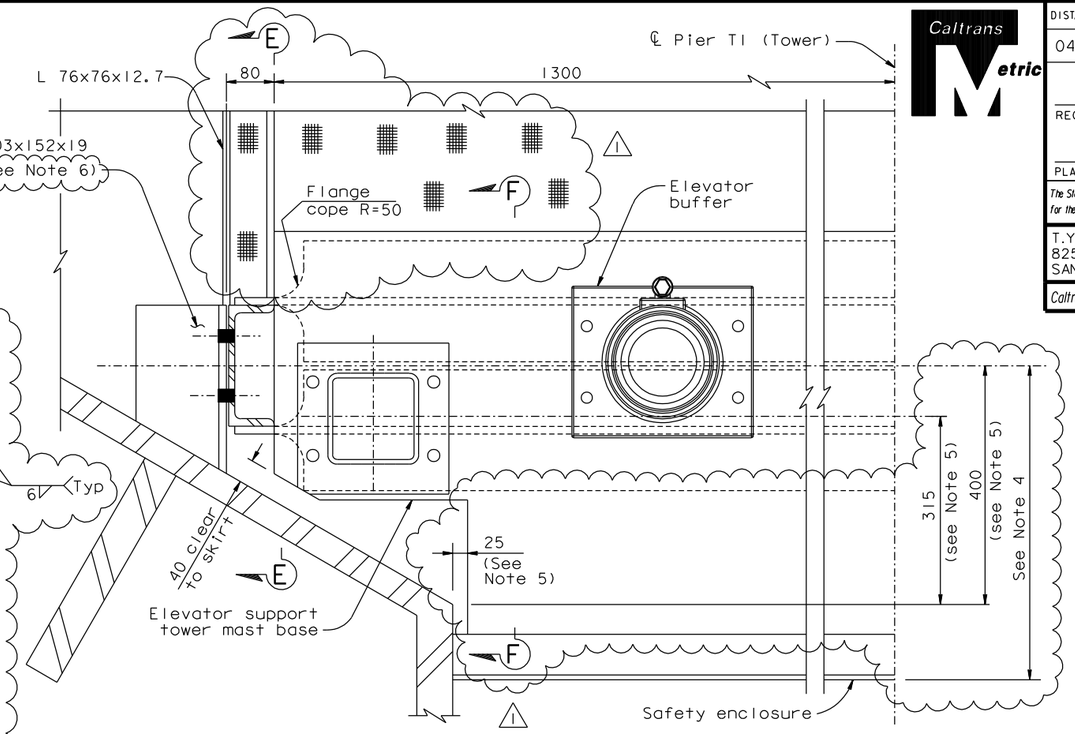

DETAIL A
1:5

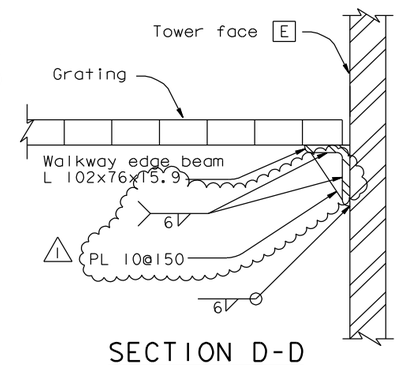

SECTION D-D
1:5

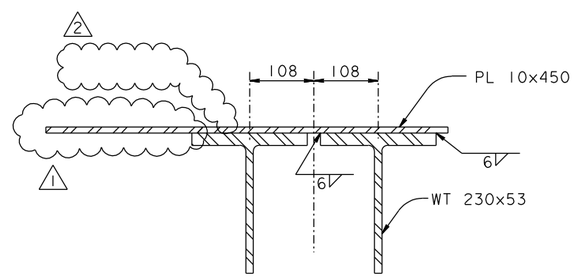

SECTION F-F
1:5

NOTES:

1. For elevator support tower mast and elevator buffer details, see "Road Plans" sheets.
2. For elevator landing details, see "Tower Access Details" sheets.
3. For base details and fasteners, see "Road Plans" sheets.
4. Dimension is dependent on elevator system selected by the Contractor.
5. The Contractor shall coordinate dimensions with elevator manufacturer.
6. The Contractor may use built-up shape with CJP in lieu of L 203x152x19, subject to review and approval of the Engineer.

REGISTERED PROFESSIONAL ENGINEER Tien Hung Ho No. C 43990 Exp. 06/30/13 CIVIL STATE OF CALIFORNIA

FOR REVISIONS ONLY

CONTRACT CHANGE ORDER NO. _____
SHEET ___ OF ___

REQUESTS FOR INFORMATION NOT ADDRESSED IN THIS CCO REMAIN IN FORCE

ALL DIMENSIONS ARE IN MILLIMETERS UNLESS OTHERWISE SHOWN

R. Valizadeh/V. Toan/Y.L./W.L./F.C.
DESIGN OVERSIGHT
Raya Valizadeh / Vong Toan / Y. Liu
SIGN OFF DATE 08/26/11

MARK	DATE	DESCRIPTIONS	BY	CH'D	CCO#
2	08/26/11	ELEVATOR DETAILS	TH	MN	85
1	07/17/09	ELEVATOR DETAILS	TH	MN	85

REVISIONS

DESIGN	BY G. Baker	CHECKED L. Rus	
DETAILS	BY S. Camo	CHECKED L. Rus	
QUANTITIES	BY D. Turner	CHECKED J. Leventini	

PREPARED FOR THE STATE OF CALIFORNIA DEPARTMENT OF TRANSPORTATION

R. Manzanarez
PROJECT ENGINEER

BRIDGE NO. 34-0006L/R
KILOMETER POST 13.2/13.9

SAN FRANCISCO OAKLAND BAY BRIDGE
EAST SPAN SEISMIC SAFETY PROJECT
SELF-ANCHORED SUSPENSION BRIDGE
(SUPERSTRUCTURE & TOWER)

TOWER ELEVATOR SUPPORT DETAILS NO. 2

Rev. Date: 5-18-98

ORIGINAL SCALE IN MILLIMETERS FOR REDUCED PLANS 0 10 20 30 40 50 60 70 80 90 100

CU 04
EA 0120F1

DISREGARD PRINTS BEARING EARLIER REVISION DATES → 04/26/02 01/01/02 12/19/02

SHEET 523R2 OF

FILE => I:\bb\04-012001\sas\contract plans and cco\cco\cco*85\5-update 08-26-11\dgn\akele02.dgn

USERNAME => DWinrow DATE PLOTTED => 26 AUG 2011 TIME PLOTTED => 10:00:55

100% PS&E