DIST.	COUNTY	ROUTE	KILOMETER POST TOTAL PROJECT	SHEET NO.	TOTAL SHEETS
04	SF	80	13.2/13.9	961R3	1204

Caltrans Metric

George Baker
REGISTERED ENGINEER - CIVIL
1-27-03
PLANS APPROVAL DATE

REGISTERED PROFESSIONAL ENGINEER George S. Baker No. C 57112 Exp. 12/31/05 CIVIL STATE OF CALIFORNIA

The State of California or its officers or agents shall not be responsible for the accuracy or completeness of electronic copies of this plan sheet.

T.Y. LIN / MOFFATT & NICHOL
825 BATTERY STREET
SAN FRANCISCO, CA 94111

Caltrans now has a web site! To get to the web site, go to: http://www.dot.ca.gov

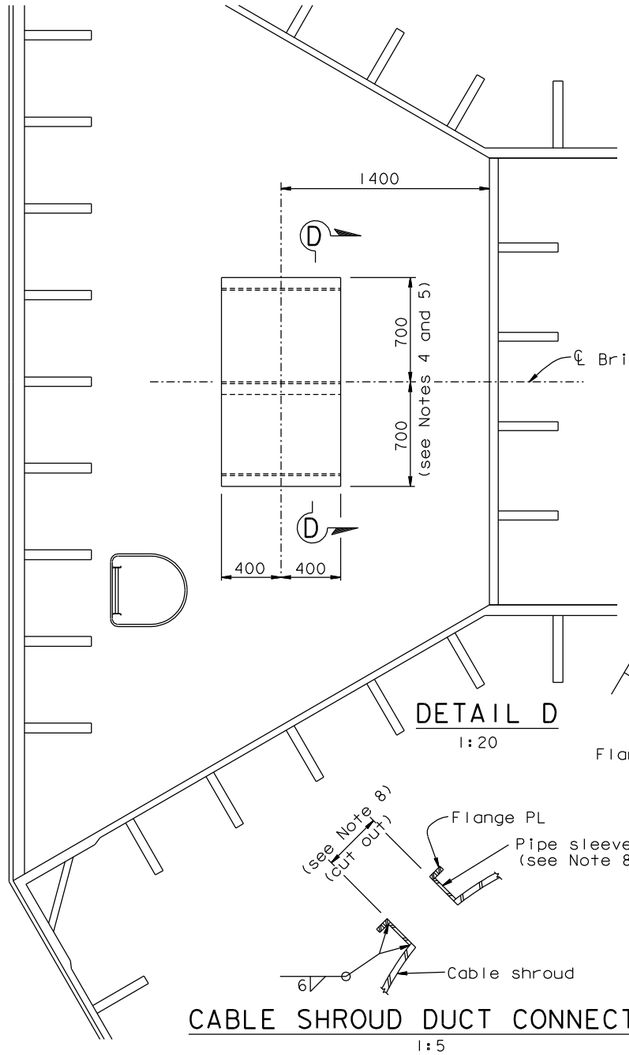

DETAIL D
1:20

CABLE SHROUD DUCT CONNECTION (see Note 8)
1:5

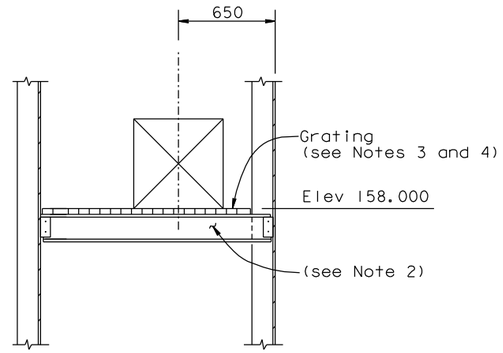

SECTION E-E
1:20

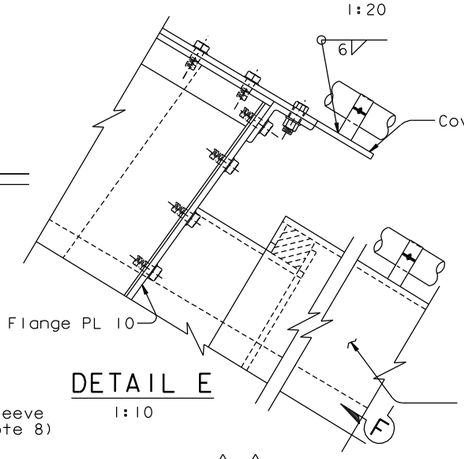

DETAIL E
1:10

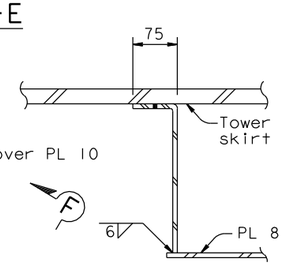

SECTION I-I
NTS

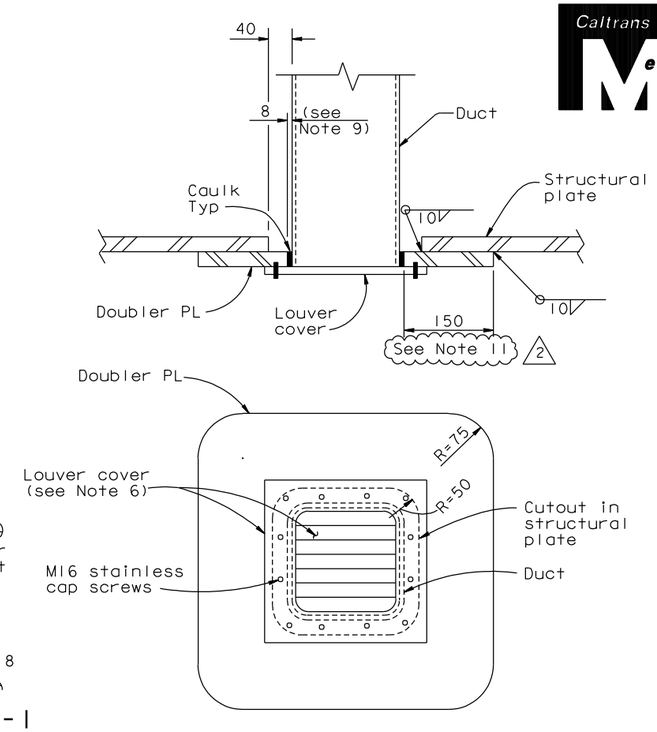

DUCT OPENING DETAIL (see Note 1)
1:5
Rectangular shown, circular similar

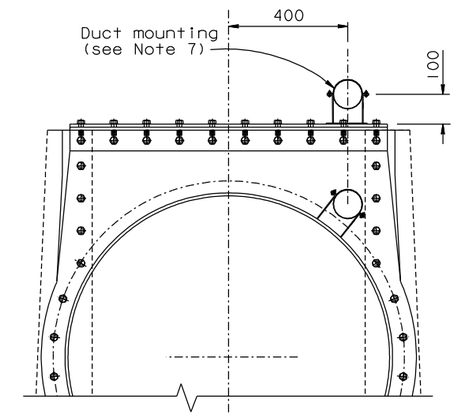

SECTION F-F
1:10

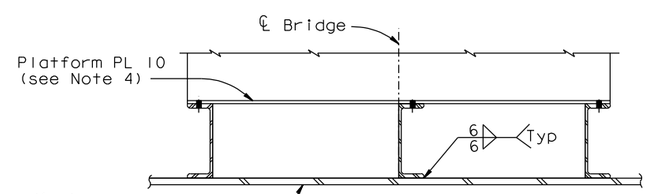

SECTION D-D
1:10

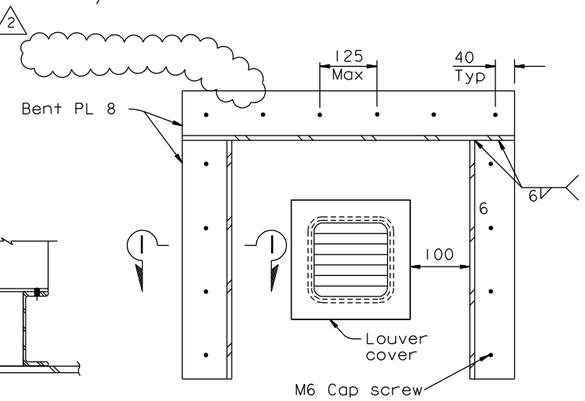

SECTION H-H
NTS

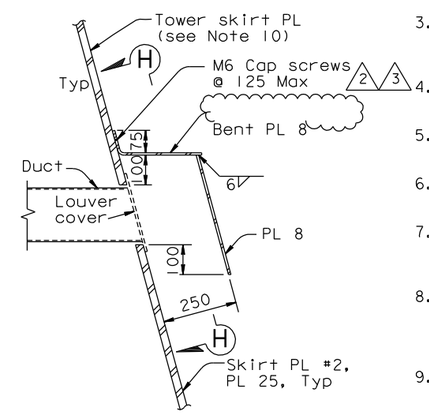

SECTION G-G
NTS

ALL DIMENSIONS ARE IN
MILLIMETERS UNLESS OTHERWISE SHOWN

NOTES:

1. For all duct openings doubler plates shall equal the penetrated structural plate.
2. For walkway support beams, see "Tower Access Details No.3" sheet.
3. Galvanized steel grating with fasteners to be provided by contractor. Grating working load shall be 7.0 kN/m (145 psf).
4. Base frames, support beams and fasteners shall be detailed to fit the dehumidifier.
5. For support platform details not shown, see "Dehumidification Support Details No.3" sheet.
6. For louver locations and details, see "East Cable Anchorage Dehumidification" sheets.
7. For similar duct mounting, see Detail B on "East Cable Anchorage Dehumidification Detail No.2" in the mechanical sheets.
8. Cable shroud pipe sleeve and duct connection shall be detailed to permit airtight bolted attachment of the dehumidification ducts. See mechanical sheets.
9. At Contractor's option, a gap of up to 25 mm may be used. For 25 mm gap, caulking with backing shall be used.
10. For tower skirt, doubler PL not used.
11. For 14 mm floorbeams, the doubler plates need only extend 100 mm beyond the duct opening.

Daniel J. Turner
REGISTERED PROFESSIONAL ENGINEER Daniel J. Turner No. C 65033 Exp. 06/30/11 CIVIL STATE OF CALIFORNIA

FOR REVISIONS ONLY

CONTRACT CHANGE ORDER NO. ____
SHEET ___ OF ___

REQUESTS FOR INFORMATION NOT ADDRESSED IN THIS CCO REMAIN IN FORCE

MARK	DATE	DESCRIPTIONS	BY	CH'D	CCO#
3	09/08/10	MISCELLANEOUS MECHANICAL	GB	DT	83
2	05/04/10	MISCELLANEOUS MECHANICAL	GB	DT	83
1	05/23/07	DEHUMIDIFICATION SYSTEM	GB	DT	32

REVISIONS

R. Valizadeh/V. Toan/Y.L./W.L./F.C.
DESIGN OVERSIGHT
Roya Valizadeh / Vong Toan / Y. Liu
SIGN OFF DATE 09/08/10

Rev. Date: 5-18-98

DESIGN	BY G. Baker	CHECKED T. Ho	
DETAILS	BY C. Mauch	CHECKED T. Ho	
QUANTITIES	BY C. Mauch	CHECKED D. Harrison	

PREPARED FOR THE STATE OF CALIFORNIA DEPARTMENT OF TRANSPORTATION

R. Manzanarez
PROJECT ENGINEER

BRIDGE NO. 34-0006L/R
KILOMETER POST 13.2/13.9

SAN FRANCISCO OAKLAND BAY BRIDGE
EAST SPAN SEISMIC SAFETY PROJECT
SELF-ANCHORED SUSPENSION BRIDGE
(SUPERSTRUCTURE & TOWER)

DEHUMIDIFICATION SUPPORT DETAILS NO.5

ORIGINAL SCALE IN MILLIMETERS FOR REDUCED PLANS 0 10 20 30 40 50 60 70 80 90 100

CU 04
EA 0120F1

DISREGARD PRINTS BEARING EARLIER REVISION DATES 04/08/02 01/09/02 12/19/02

SHEET 544R3 OF

FILE => I:\bb\04-012001\sas\contract plans and cco\cco\cco*83\6-revision 09-08-10\dgn\akdeh05.dgn

USERNAME => arivera DATE PLOTTED => 08 SEP 2010 TIME PLOTTED => 10:45:19

100 % PS&E