DIST	COUNTY	ROUTE	KILOMETER POST TOTAL PROJECT	SHEET No	TOTAL SHEETS
04	SF	80	13.2/13.9	51R5	1204

Bobby J. Melvin 12/19/2002
REGISTERED MECHANICAL ENGINEER DATE

PLANS APPROVAL DATE

REGISTERED PROFESSIONAL ENGINEER Bobby J. Melvin No. 28685 Exp. 6/30/11 MECHANICAL STATE OF CALIFORNIA

PARSONS BRINCKERHOFF QUADE & DOUGLAS, INC.
303 SECOND STREET, SUITE 700 N
SAN FRANCISCO, CA 94107

The State of California or its officers or agents shall not be responsible for the accuracy or completeness of electronic copies of this plan sheet.

To get to the web site, go to http://www.dot.ca.gov

Caltrans Metric

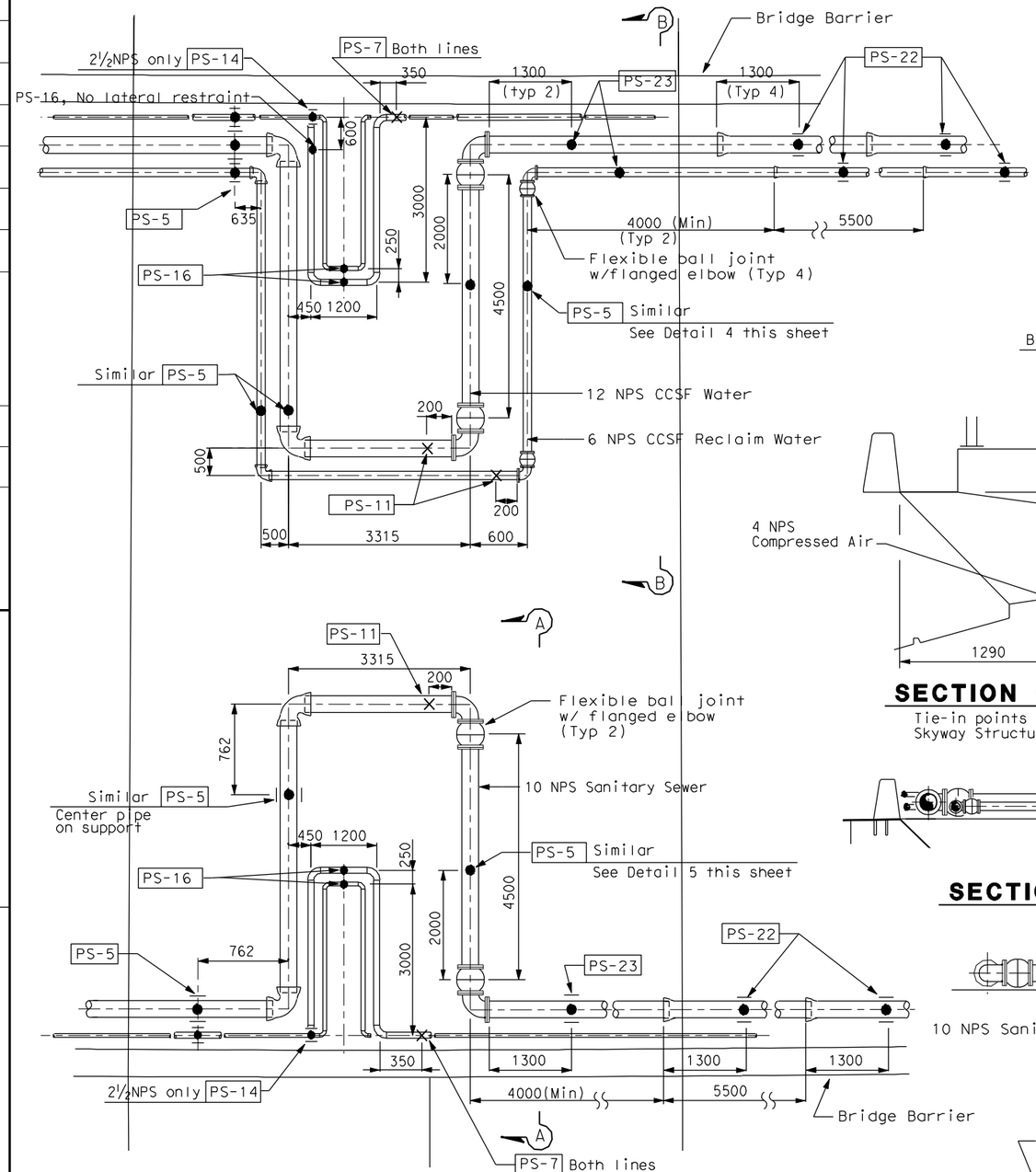

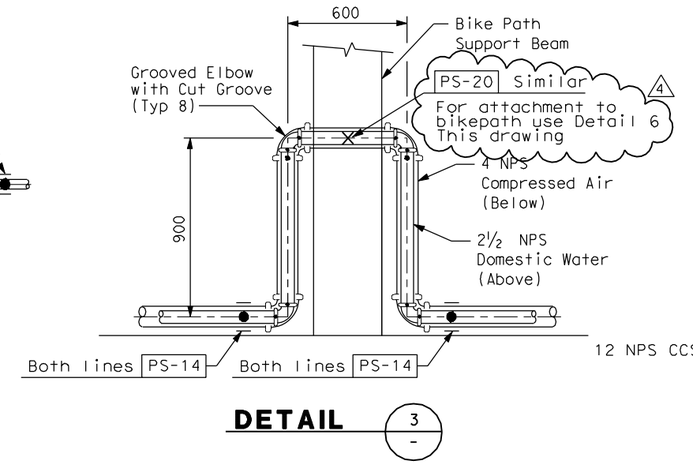

DETAIL 3

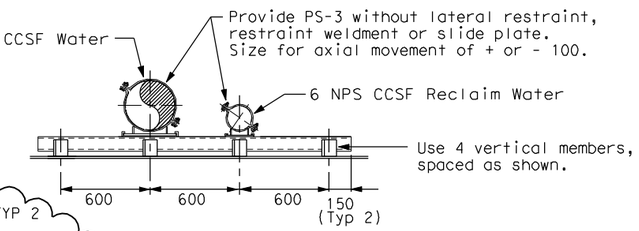

DETAIL 4

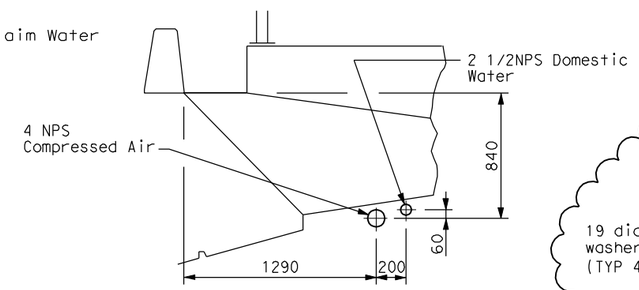

SECTION C-C

Tie-in points with Skyway Structure

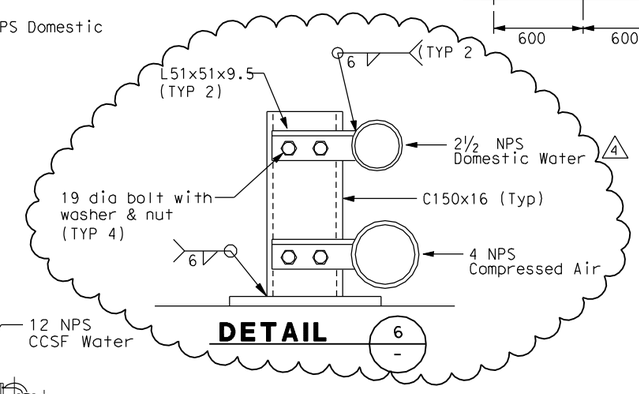

DETAIL 6

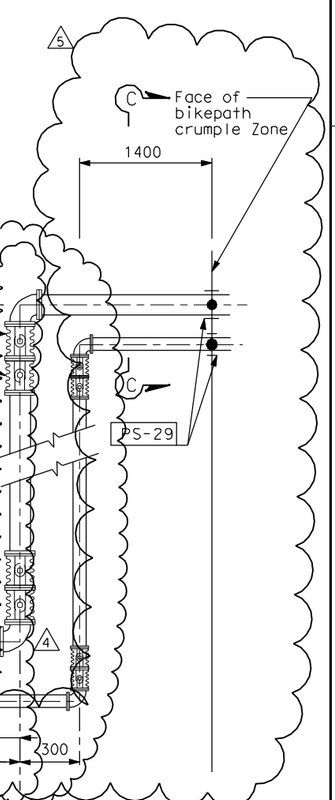

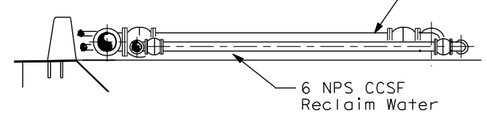

SECTION B-B

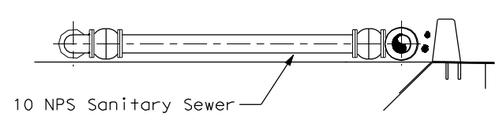

SECTION A-A

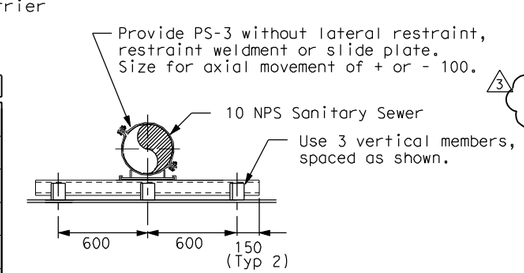

DETAIL 5

EXPANSION JOINTS FOR HINGE A

DETAIL 1

REQUEST FOR INFORMATION NOT ADDRESSED IN THIS CCO REMAIN IN FORCE					
5	6/25/10	MISCELLANEOUS MECHANICAL	CH	BM	83
4	4/23/10	MISCELLANEOUS MECHANICAL	CH	BM	83
3	2/11/09	MISCELLANEOUS MECHANICAL	CM	BM	83
2	1/18/08	MECHANICAL MODIFICATIONS	VY	BM	31
1	9/05/07	MECHANICAL MODIFICATIONS	BM	RM	31
MARK	DATE	DESCRIPTIONS	BY	CH'D	CCO#
		REVISIONS			

CONTRACT CHANGE ORDER NO. _____
SHEET _____ OF _____

ALL DIMENSIONS IN MILLIMETERS UNLESS OTHERWISE SHOWN

MECHANICAL PIPING SECTIONS AND DETAILS NO. 5

NO SCALE

M-15

DATE	BM	CALCULATED/ DESIGNED BY
10/31/02	KH	CHECKED BY
11/15/02		REVISED BY
		DATE REVISED

PROJECT ENGINEER Rich Newell

STATE OF CALIFORNIA - DEPARTMENT OF TRANSPORTATION
Caltrans

LAST REVISION 00-00-00
DATE PLOTTED => 6/25/2010
TIME PLOTTED => 11:03:12 AM

FOR REDUCED PLANS ORIGINAL SCALE IS IN MILLIMETERS 0 20 40 60 80

DGN FILE => J:\13103k - SFOBB\RFI-Construction Support\CCO\83\83r4\04-0120f1_0051R05.dgn
USERNAME => hawkinsc

CU 04251 EA 0120F1