DIST	COUNTY	ROUTE	KILOMETER POST TOTAL PROJECT	SHEET No	TOTAL SHEETS
04	SF	80	13.2/13.9	46R6	1204

Bobby J. Melvin 11/25/2009
REGISTERED MECHANICAL ENGINEER DATE

PLANS APPROVAL DATE

REGISTERED PROFESSIONAL ENGINEER Bobby J. Melvin No. 28685 Exp. 6/30/11 MECHANICAL STATE OF CALIFORNIA

PARSONS BRINCKERHOFF QUADE & DOUGLAS, INC.
303 SECOND STREET, SUITE 700 N
SAN FRANCISCO, CA 94107

The State of California or its officers or agents shall not be responsible for the accuracy or completeness of electronic copies of this plan sheet.

Caltrans now has a web site! To get to the web site, go to http://www.dot.ca.gov

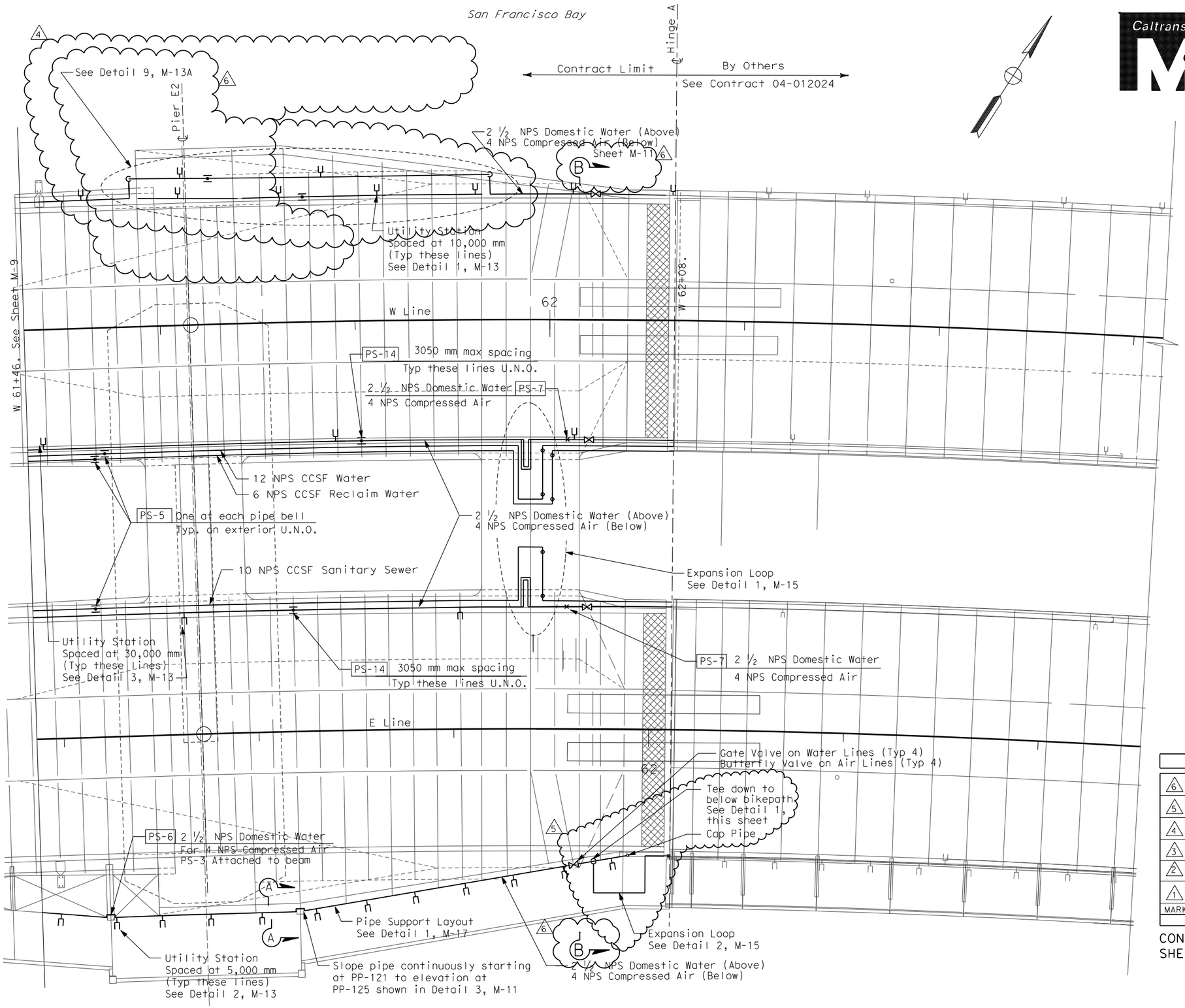

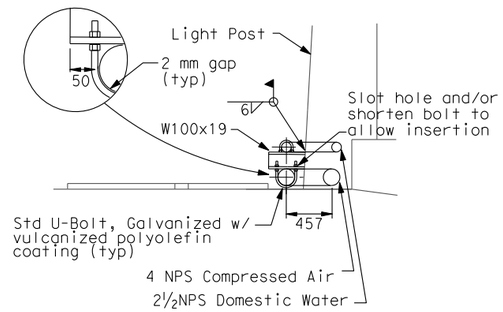

SECTION A-A

Pipe routing at PP-117 & PP121
Pipe support typ at PP-121 only

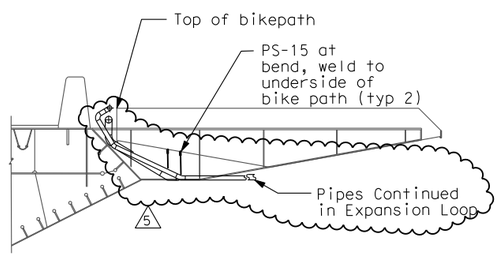

Pipe Transition to Below Bikepath

DETAIL 1 / -

REQUEST FOR INFORMATION NOT ADDRESSED IN THIS CCO REMAIN IN FORCE

MARK	DATE	DESCRIPTIONS	BY	CH'D	CCO#
6	8/20/10	MISCELLANEOUS MECHANICAL	CH	BM	83
5	6/25/10	MISCELLANEOUS MECHANICAL	CH	BM	83
4	11/18/09	MISCELLANEOUS MECHANICAL	CH	BM	83
3	8/12/08	MECHANICAL MODIFICATIONS	VY	BM	31
2	1/18/08	MECHANICAL MODIFICATIONS	VY	BM	31
1	9/05/07	MECHANICAL MODIFICATIONS	BM	RM	31

REVISIONS

CONTRACT CHANGE ORDER NO._____
SHEET ____ OF ____

MAIN SPAN STRUCTURE PIPING PLAN

SCALE: 1:200

M-10

CALCULATED/ DESIGNED BY	BM	DATE 10/31/02	REVISED BY
CHECKED BY	KH	11/15/02	DATE REVISED

PROJECT ENGINEER Rich Newell

STATE OF CALIFORNIA - DEPARTMENT OF TRANSPORTATION

Caltrans

ALL DIMENSIONS IN MILIMETERS UNLESS OTHERWISE SHOWN

FOR REDUCED PLANS ORIGINAL SCALE IS IN MILLIMETERS 0 20 40 60 80

USERNAME => hawkinsc
DGN FILE => J:\13103k - SFOBB\RFI-Construction Support\CCO\83\83 Draft 8\04-0120f1_0046R06.dgn

CU: 04251 EA 0120F1

LAST REVISION 00-00-00 DATE PLOTTED => 8/20/2010 TIME PLOTTED => 2:52:35 PM