DIST	COUNTY	ROUTE	KILOMETER POST TOTAL PROJECT	SHEET No.	TOTAL SHEETS
04	SF	80	13.2/13.9	149 R5	1204

12/19/02
REGISTERED ELECTRICAL ENGINEER DATE

12-6-04
PLANS APPROVAL DATE

REGISTERED PROFESSIONAL ENGINEER JENS ERLINGSSON No. 8249 Exp. 9/30/06 ELECTRICAL STATE OF CALIFORNIA

PB POWER, Inc.
A Parsons Brinckerhoff Company
303 Second St., Suite 700N
San Francisco, CA 94107-1317

The State of California or its officers or agents shall not be responsible for the accuracy or completeness of electronic copies of this plan sheet.

Caltrans now has a web site! To get to the web site, go to http://www.dot.ca.gov

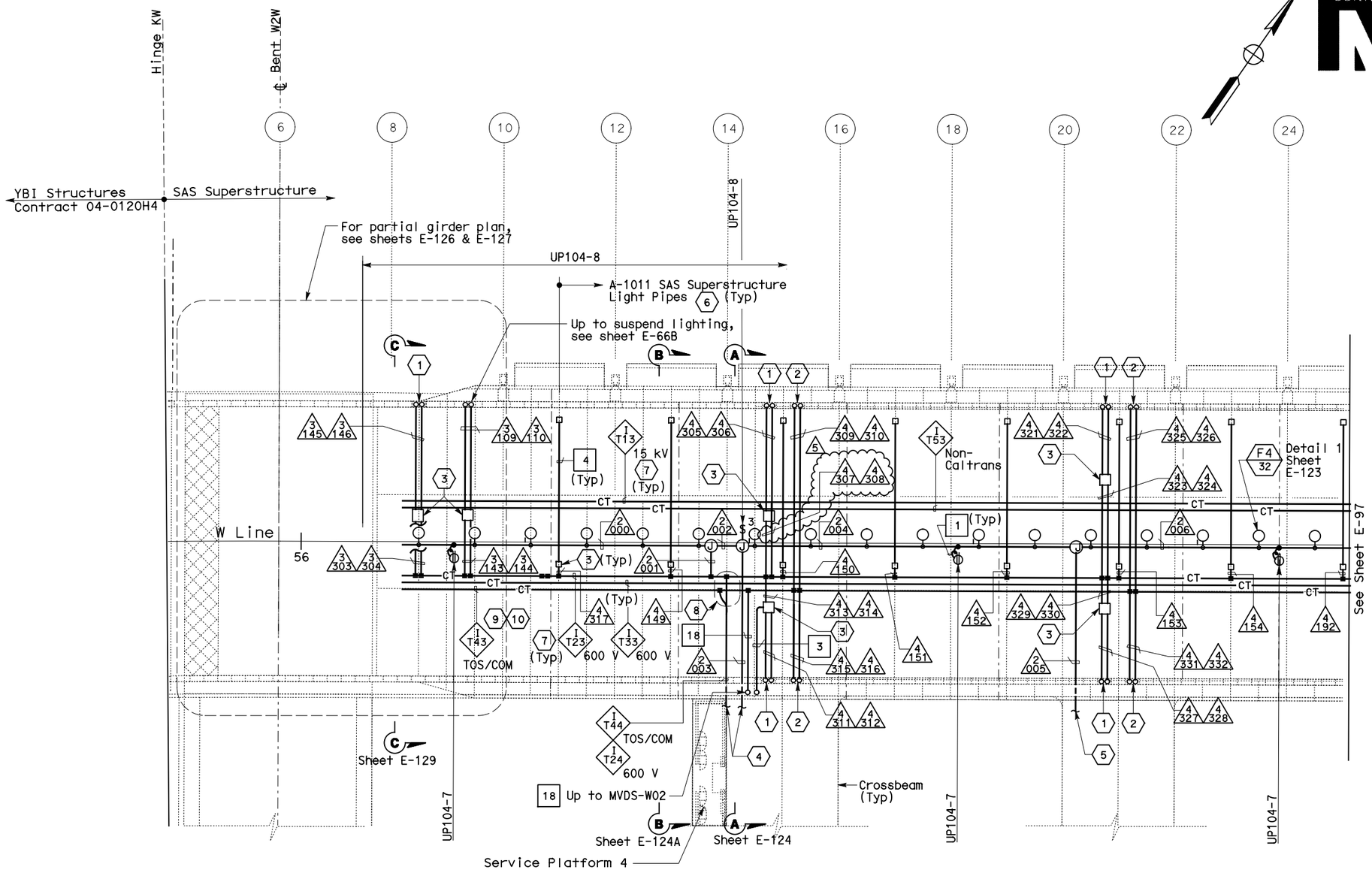

SAS SUPERSTRUCTURE - CONDUIT AND CABLE TRAY PLAN

SHEET NOTES:

1. Conduit up to PB-LTG located in barrier, see sheet E-46.
2. Conduit up to PB-COM located in barrier, see sheet E-46.
3. PB-2A locate on top of floor.
4. For cable tray run and lighting inside crossbeam, see sheet E-114.
5. For lighting inside crossbeam, see sheet E-119.
6. PB-2L with circuit for future light pipes. See sheet E-121 for installation details and E-130 for lighting schedule.
7. For cable tray & ground bar support, refer to sheet E-125.
8. For fiber splice tray detail, refer to sheet E-356.
9. Furnish and install 1-25.4 mm innerduct per BASE fiber optic cable in TOS/COM cable tray.
10. Furnish and install BASE fiber optic cable in innerduct. See sheet E-1100.

NOTES:

1. References:
   - TOS equipment is shown for conduit routing only. For typical details of TOS controller and devices, see sheets E-344 through E-357.
   - For types of pull boxes, splice boxes and enclosures, see sheet E-83.
   - For bridge grounding plan, see sheet E-111.
   - For circuit and conduit/cable tray schedules, see sheets starting at E-401.
2. For other work related to Hinge KW and items not shown on this sheet, see Electrical Special Provisions.
3. The girder lighting fixtures are shown diagrammatically.Contractor shall install fixtures at railing posts with a maximum of 8000 mm between fixtures. For types and typical lighting fixture installation details, see sheet E-123.
4. The cable trays are shown diagrammatically. For typical girder cable tray plans and sections, see sheets E-124 and E-125.

REGISTERED PROFESSIONAL ENGINEER SYN YEE CHIN No. 18186 Exp. 09/30/2011 ELECTRICAL STATE OF CALIFORNIA
FOR REVISION ONLY 4 5

REGISTERED PROFESSIONAL ENGINEER FADI WALIEDDINE No. 11465 Exp. 12/31/2009 ELECTRICAL STATE OF CALIFORNIA
FOR REVISION ONLY 2 3

REGISTERED PROFESSIONAL ENGINEER MAXWELL FUMIO TAKAKI No. E 8651 Exp. 9/30/2010 ELECTRICAL STATE OF CALIFORNIA
FOR REVISION ONLY 1

THIS PLAN IS ACCURATE FOR ELECTRICAL WORK ONLY.

REQUEST FOR INFORMATION NOT ADDRESSED IN THIS CCO REMAIN IN FORCE

MARK	DATE	DESCRIPTIONS	BY	CH'D	CCO#
5	07/01/11	TOS MODIFICATIONS	RR	RG	81
4	03/01/11	BASE INTEGRATION	RSB	WB	150
3	06/25/09	WEST END BARRIER CONDUIT	RG	FW	44S1
2	02/25/08	CABLE TRAY CHANGES	RG	FW	42S1
1	02/19/08	ELECTRICAL MODIFICATIONS	MP EL	RR	42

REVISIONS

CONTRACT CHANGE ORDER NO._____
SHEET_____ OF _____

SAS SUPERSTRUCTURE GIRDER WESTBOUND
LIGHTING AND ELECTRICAL SYSTEMS
SCALE 1:200

ALL DIMENSIONS ARE IN MILLIMETERS UNLESS OTHERWISE SHOWN.

E-96

DATE	REVISED BY	DATE	REVISED
8/02	FK	8/02	IAH

CALCULATED/DESIGNED BY — CHECKED BY

DESIGN OVERSIGHT — BEHZAD GOLEMOHAMMADI

STATE OF CALIFORNIA - DEPARTMENT OF TRANSPORTATION — Caltrans

FOR REDUCED PLANS ORIGINAL SCALE IS IN MILLIMETERS 0 20 40 60 80

DGN FILE =>04-0120f1_0149R05.dgn
USERNAME =>llorico

CU 04251 | EA 0120F1

LAST REVISION 00-00-00 | DATE PLOTTED => 06-JUL-2011 | TIME PLOTTED => 14:54

DIST	COUNTY	ROUTE	KILOMETER POST TOTAL PROJECT	SHEET No	TOTAL SHEETS
04	SF	80	13.2/13.9	166 R4	1204

Caltrans Metric

12/19/02
REGISTERED ELECTRICAL ENGINEER

12-6-04
PLANS APPROVAL DATE

REGISTERED PROFESSIONAL ENGINEER JENS ERLINGSSON No. 8249 Exp. 9/30/06 ELECTRICAL STATE OF CALIFORNIA

PB POWER, Inc.
A Parsons Brinckerhoff Company
303 Second St., Suite 700N
San Francisco, CA 94107-1317

The State of California or its officers or agents shall not be responsible for the accuracy or completeness of electronic copies of this plan sheet.

Caltrans now has a web site! To get to the web site, go to http://www.dot.ca.gov

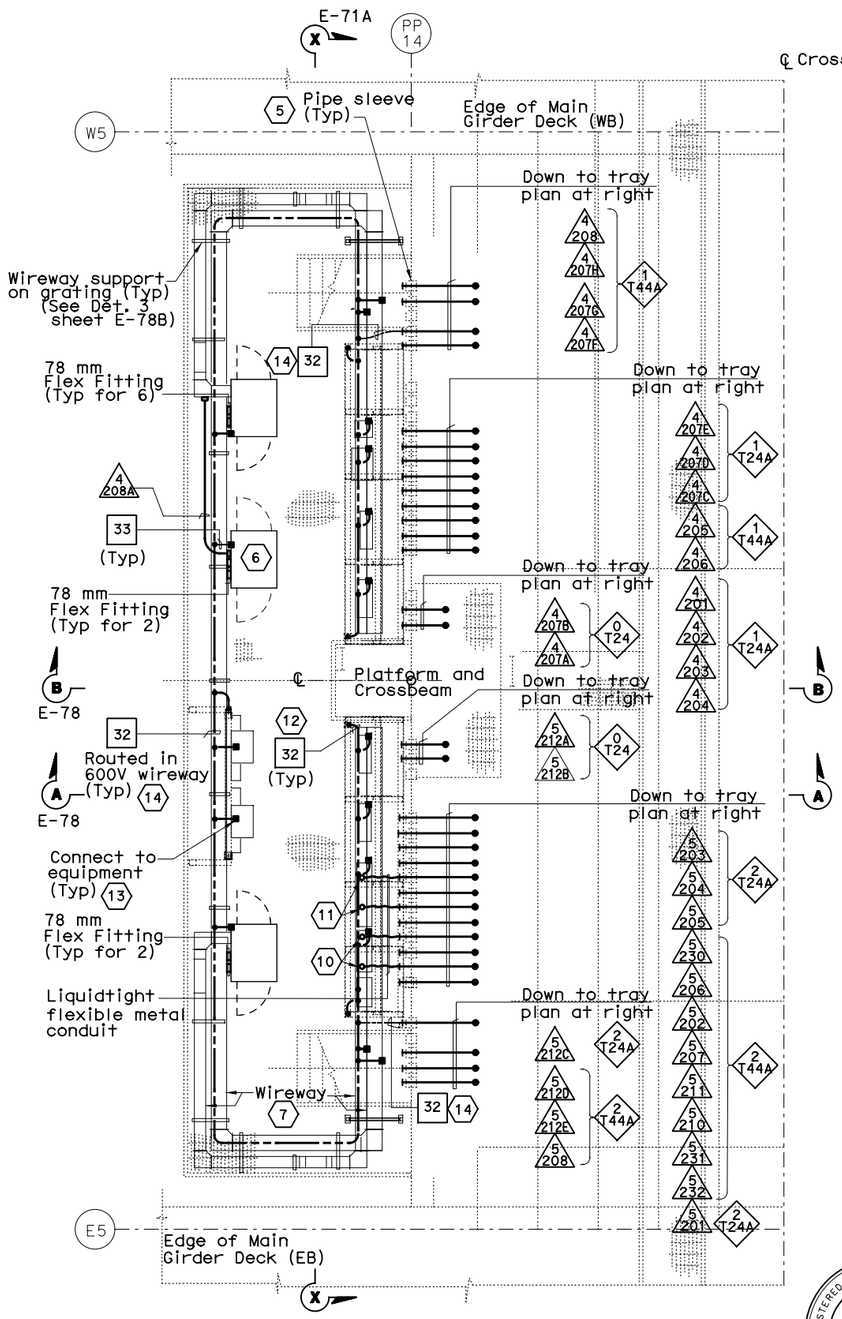

WIREWAY AND CONDUIT PLAN AT SERVICE PLATFORM

SCALE 1:40

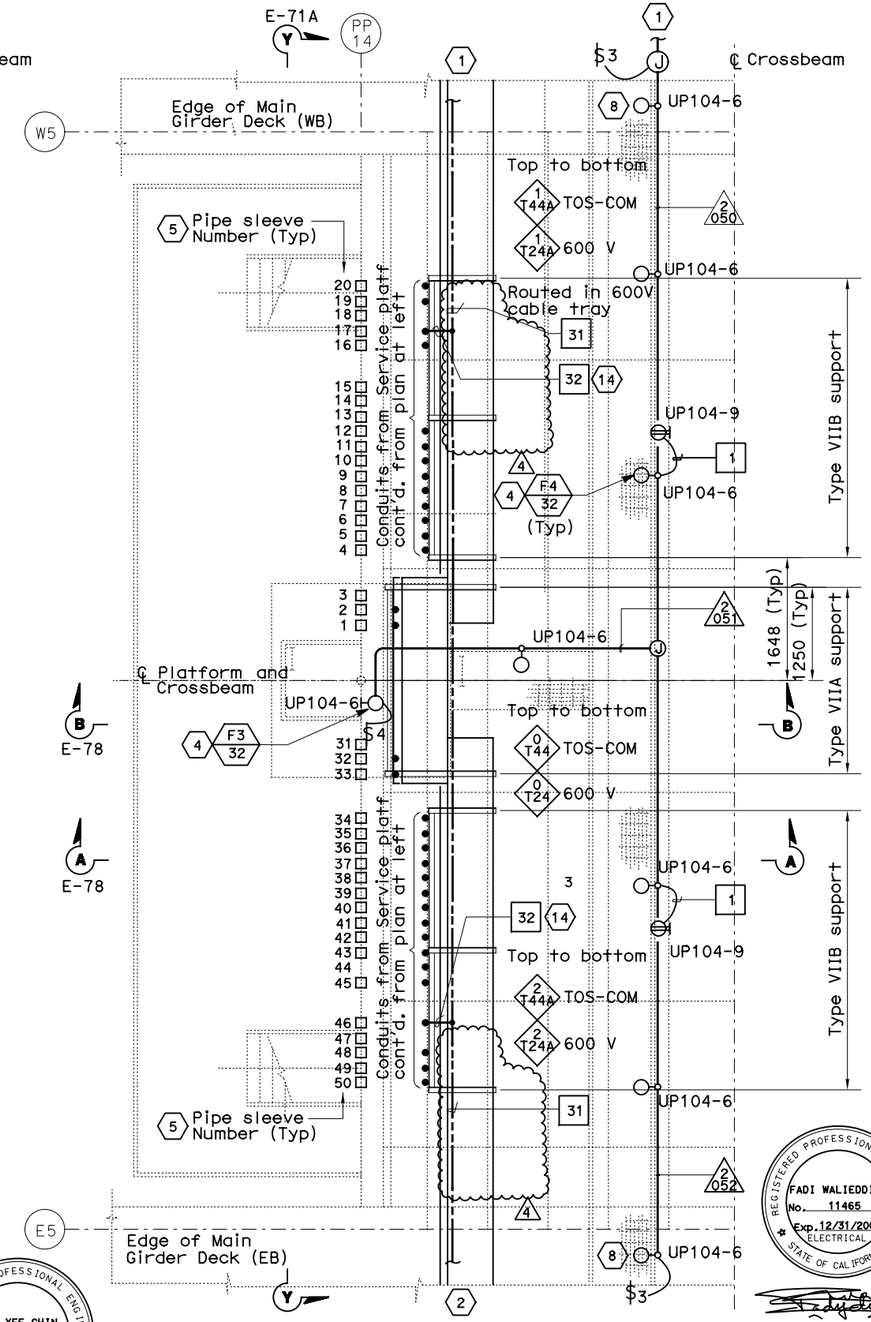

CABLE TRAY AND CONDUIT PLAN INSIDE CROSSBEAM

SCALE 1:40

REGISTERED PROFESSIONAL ENGINEER SYN YEE CHIN No. 18186 Exp. 09/30/2011 ELECTRICAL STATE OF CALIFORNIA

Syn Yee Chin
FOR REVISION ONLY
4

REGISTERED PROFESSIONAL ENGINEER FADI WALIEDDINE No. 11465 Exp. 12/31/2009 ELECTRICAL STATE OF CALIFORNIA

FOR REVISION ONLY
1 2 3

SHEET NOTES:

1. For continuation inside WB girder, see sheets E-96 and E-114A.
2. For continuation inside EB girder, see sheet E-181 and E-114A.
3. Deleted.
4. For typical lighting fixture installation see Details 2 and 3, sheet E-123.
5. Pipe sleeve without conduit going through is spare. Contractor to provide plug or cap at both ends. For location see Section Y-Y on sheet E-71A.
6. TOS-4WB for the temporary mobile CMS. Control cabinet shall remain for future use. U.O.N.
7. For wireway numbers, see sheet E-71.
8. Locate light fixture approximate half way between girder wall and girder walkway.
9. DELETED
10. Terminate conduits at Terminal Box #TEL-4.
11. Terminate conduits at Terminal Box #COM-4.
12. See Detail 4, Dwg E-111B for Structural rack grounding.
13. #2 Bare Copper Wire in conduit, For installation details, see sheet E-71A.
14. Ground conductor shall be protected from damage when exposed outside the structure. Route ground conductor in liquidtight flexible metal conduit for protection, unless noted otherwise on plans. For additional installation details, see Detail 6, sheet E-111A.

NOTES:

1. Reference:- For circuit, conduit/cable tray schedules, see sheets starting at E-401.
2. For wireway support details, see AS sheets.
3. For location of pipe sleeves at the utility platform crossbeams, see Typical Crossbeam Details sheets.
4. For platform elevations, see sheet E-71A.

REQUEST FOR INFORMATION NOT ADDRESSED IN THIS CCO REMAIN IN FORCE

MARK	DATE	DESCRIPTIONS	BY	CH'D	CCO#
4	07/01/11	TOS MODIFICATIONS	RR	RG	81
3	11/20/09	ELECTRICAL GROUNDING	AWG RR	RG FW	75
2	06/25/09	SERVICE PLATFORM ELECTRICAL CHANGES	RR RY	RG FW	55
1	03/30/09	SERVICE PLATFORM ELECTRICAL CHANGES	RR MP	RG FW	55

REVISIONS

CONTRACT CHANGE ORDER NO._____
SHEET_____ OF_____

DETAILS
SAS SUPERSTRUCTURE GIRDER WESTBOUND PLATFORM 4 CONDUIT, LIGHTING AND GROUNDING PLAN

SCALE AS NOTED

E-114

THIS PLAN IS ACCURATE FOR ELECTRICAL WORK ONLY.

ALL DIMENSIONS ARE IN MILLIMETERS UNLESS OTHERWISE SHOWN.

FOR REDUCED PLANS ORIGINAL SCALE IS IN MILLIMETERS 0 20 40 60 80

DGN FILE =04-0120f1_0166R04.dgn
USERNAME =Klorico

CU 04251 | EA 0120F1

LAST REVISION 00-00-00
DATE PLOTTED =05-JUL-2011
TIME PLOTTED =14:54

STATE OF CALIFORNIA - DEPARTMENT OF TRANSPORTATION
Caltrans
DESIGN OVERSIGHT
BEHZAD GOLEMOHAMMADI
CALCULATED/DESIGNED BY FK DATE 11/02 REVISED BY
CHECKED BY IAH 11/02 DATE REVISED

DIST	COUNTY	ROUTE	KILOMETER POST TOTAL PROJECT	SHEET No.	TOTAL SHEETS
04	SF	80	13.2/13.9	167 R4	1204

Jens Erlingsson 12/19/02
REGISTERED ELECTRICAL ENGINEER DATE

12-6-04
PLANS APPROVAL DATE

REGISTERED PROFESSIONAL ENGINEER JENS ERLINGSSON No. 8249 Exp. 9/30/06 ELECTRICAL STATE OF CALIFORNIA

PB POWER, Inc.
A Parsons Brinckerhoff Company
303 Second St., Suite 700N
San Francisco, CA 94107-1317

The State of California or its officers or agents shall not be responsible for the accuracy or completeness of electronic copies of this plan sheet.

Caltrans now has a web site! To get to the web site, go to http://www.dot.ca.gov

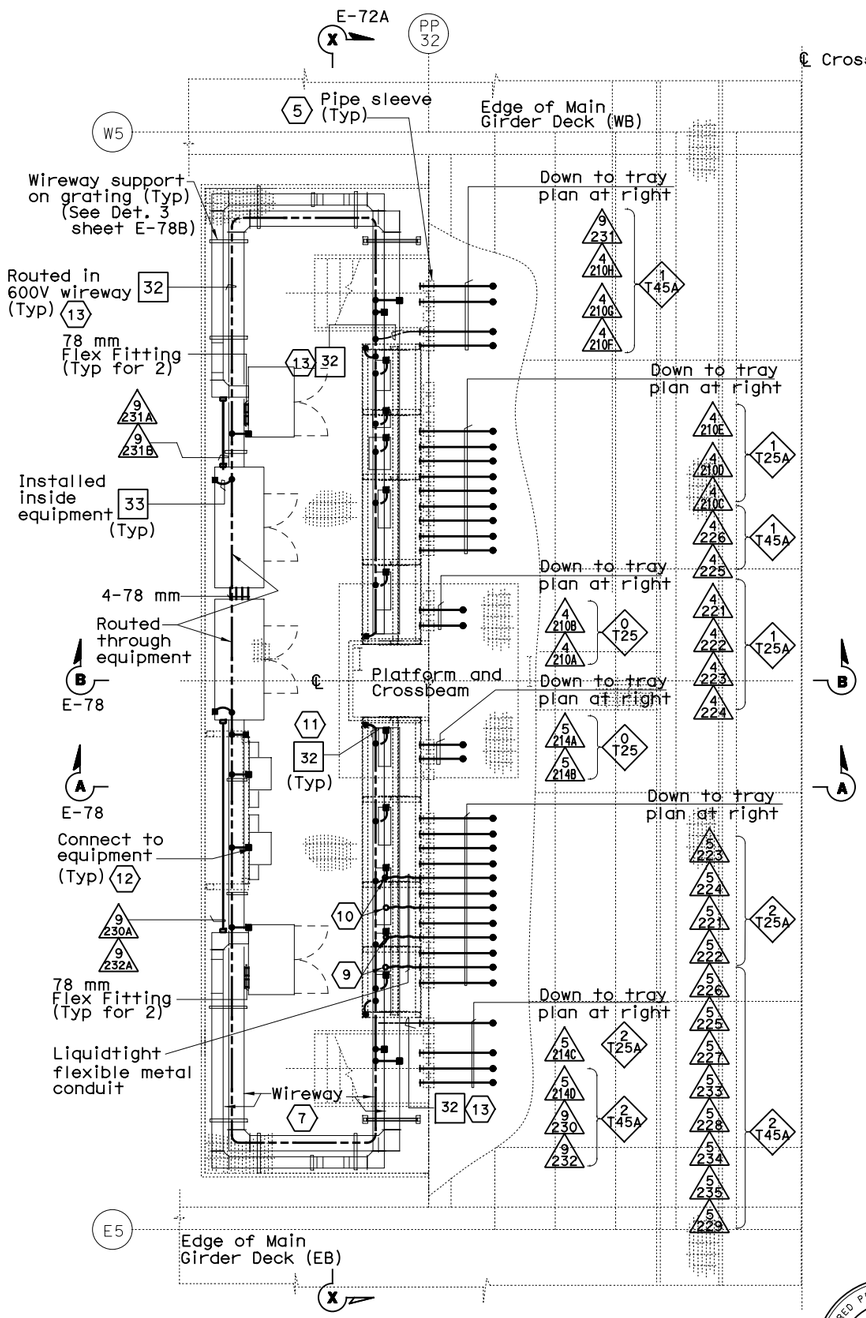

WIREWAY AND CONDUIT PLAN AT SERVICE PLATFORM

SCALE 1:40

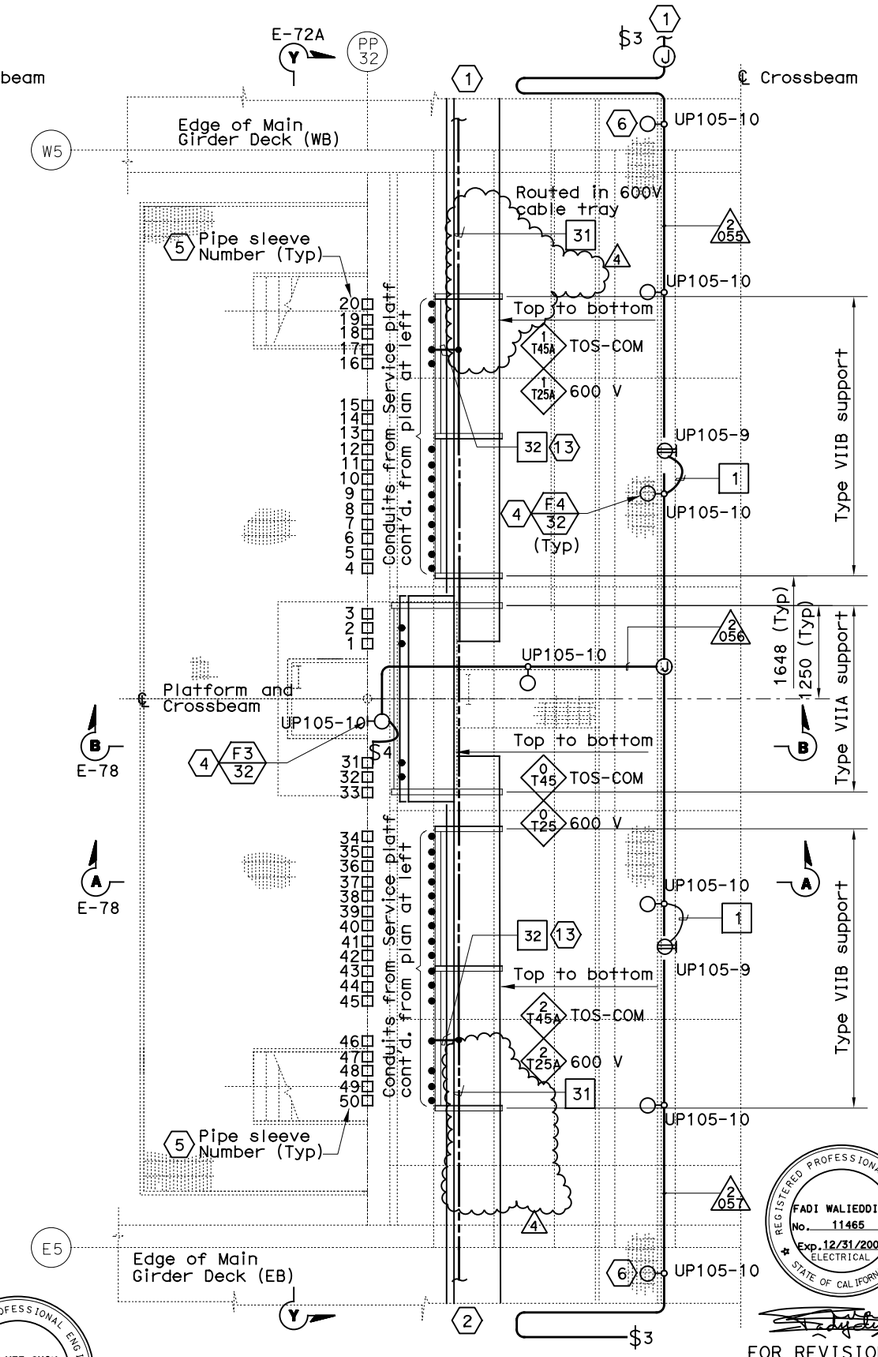

CABLE TRAY AND CONDUIT PLAN INSIDE CROSSBEAM

SCALE 1:40

REGISTERED PROFESSIONAL ENGINEER SYN YEE CHIN No. 18186 Exp. 09/30/2011 ELECTRICAL STATE OF CALIFORNIA

Syn Yee Chin
FOR REVISION ONLY
4

REGISTERED PROFESSIONAL ENGINEER FADI WALIEDDINE No. 11465 Exp. 12/31/2009 ELECTRICAL STATE OF CALIFORNIA

FOR REVISION ONLY
1 2 3

SHEET NOTES:

1. For continuation inside WB girder, see sheets E-97 and E-114B.
2. For continuation inside EB girder, see sheet E-182 and E-114B.
3. Deleted.
4. For typical lighting fixture installation see Details 2 and 3, sheet E-123.
5. Pipe sleeve without conduit going through is spare. Contractor to provide plug or cap at both ends. For location see Section Y-Y on sheet E-72A.
6. Locate light fixture approximate half way between girder wall and girder walkway.
7. For wireway numbers, see sheet E-72.
8. DELETED
9. Terminate conduits at Terminal Box #TEL-5.
10. Terminate conduits at Terminal Box #COM-5.
11. See Detail 4, Dwg E-111B for Structural rack grounding.
12. #2 Bare Copper Wire in conduit, For installation details, see sheet E-72A.
13. Ground conductor shall be protected from damage when exposed outside the structure. Route ground conductor in liquidtight flexible metal conduit for protection, unless noted otherwise on plans. For additional installation details, see Detail 7, sheet E-111A.

NOTES:

1. Reference: - For circuit, conduit/cable tray schedules, see sheets starting at E-401.
2. For wireway support details, see AS sheets.
3. For location of pipe sleeves at the utility platform crossbeams, see Typical Crossbeam Details sheets.
4. For platform elevations, see sheet E-72A.

REQUEST FOR INFORMATION NOT ADDRESSED IN THIS CCO REMAIN IN FORCE

MARK	DATE	DESCRIPTIONS	BY	CH'D	CCO#
4	07/01/11	TOS MODIFICATIONS	RR	RG	81
3	11/20/09	ELECTRICAL GROUNDING	AWG RR	RG FW	75
2	06/25/09	SERVICE PLATFORM ELECTRICAL CHANGES	RR RY	RG FW	55
1	03/30/09	SERVICE PLATFORM ELECTRICAL CHANGES	RR MP	RG FW	55

REVISIONS

CONTRACT CHANGE ORDER NO._____
SHEET_____ OF_____

DETAILS

SAS SUPERSTRUCTURE GIRDER WESTBOUND PLATFORM 5 CONDUIT, LIGHTING, AND GROUNDING PLAN

SCALE AS NOTED

E-115

DESIGN OVERSIGHT	CALCULATED/DESIGNED BY	CHECKED BY	REVISED BY	DATE REVISED
BEHZAD GOLEMOHAMMADI	JP	BL	DATE 7/01	12/01

STATE OF CALIFORNIA - DEPARTMENT OF TRANSPORTATION
Caltrans

THIS PLAN IS ACCURATE FOR ELECTRICAL WORK ONLY.

ALL DIMENSIONS ARE IN MILLIMETERS UNLESS OTHERWISE SHOWN.

FOR REDUCED PLANS ORIGINAL SCALE IS IN MILLIMETERS 0 20 40 60 80

DGN FILE =>04-0120f1_0167R04.dgn
USERNAME =>llorico

CU 04251 | EA 0120F1

LAST REVISION 00-00-00 | DATE PLOTTED => 05-JUL-2011 | TIME PLOTTED => 14:55

DIST	COUNTY	ROUTE	KILOMETER POST TOTAL PROJECT	SHEET No	TOTAL SHEETS
04	SF	80	13.2/13.9	168 R5	1204

REGISTERED ELECTRICAL ENGINEER 12/19/02 DATE

12-6-04
PLANS APPROVAL DATE

REGISTERED PROFESSIONAL ENGINEER JENS ERLINGSSON No. 8249 Exp. 9/30/06 ELECTRICAL STATE OF CALIFORNIA

PB POWER, Inc.
A Parsons Brinckerhoff Company
303 Second St., Suite 700N
San Francisco, CA 94107-1317

The State of California or its officers or agents shall not be responsible for the accuracy or completeness of electronic copies of this plan sheet.

Caltrans now has a web site! To get to the web site, go to http://www.dot.ca.gov

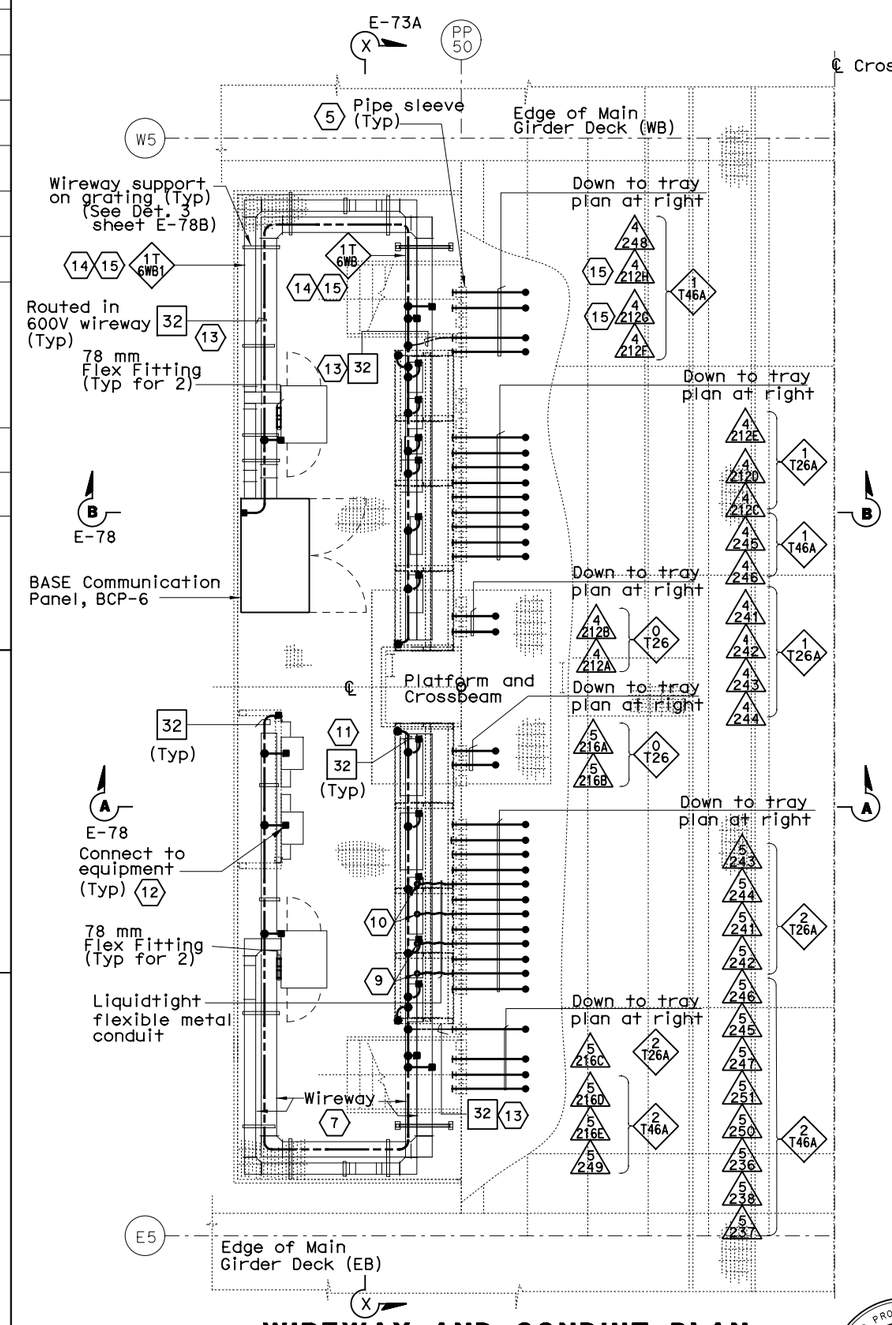

WIREWAY AND CONDUIT PLAN AT SERVICE PLATFORM

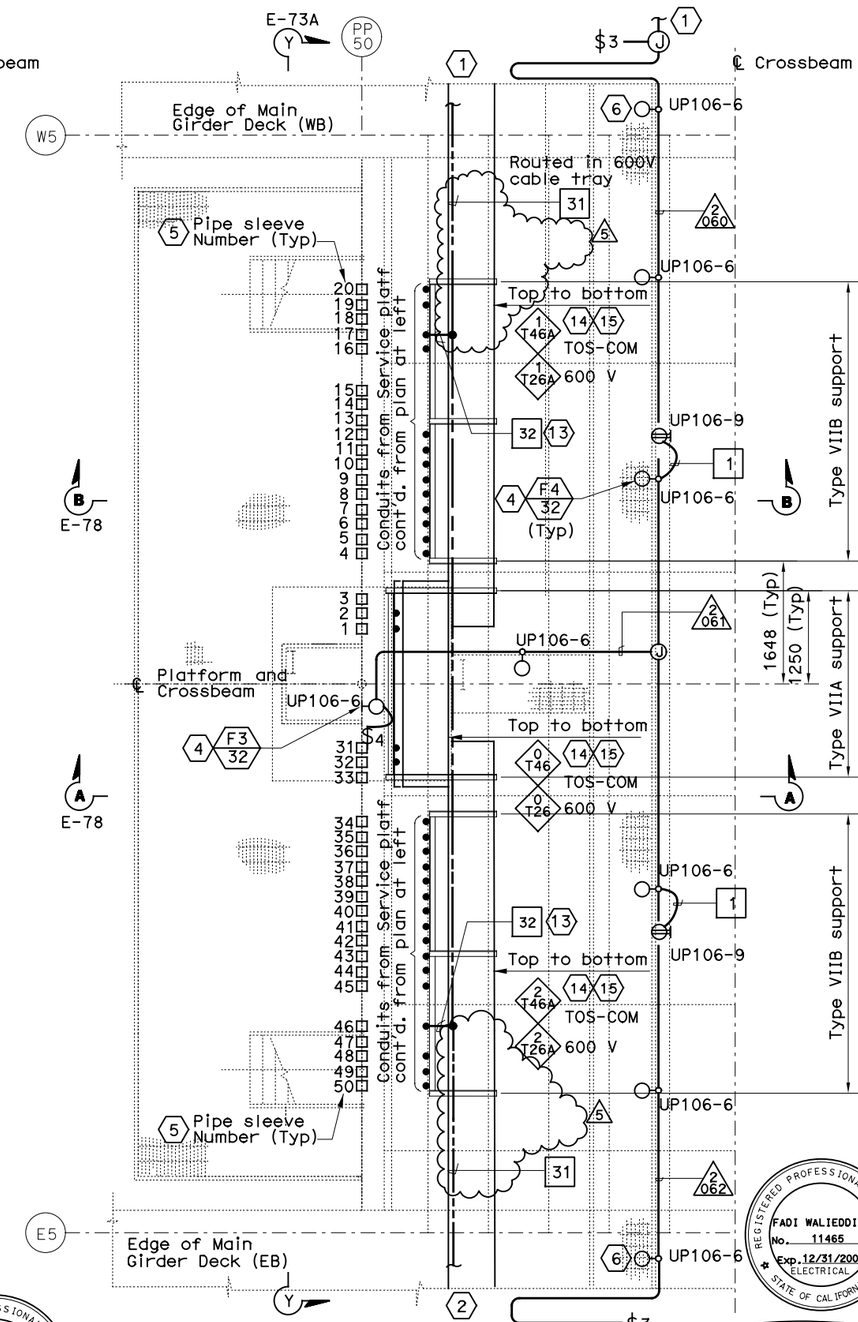

CABLE TRAY AND CONDUIT PLAN INSIDE CROSSBEAM

SCALE 1:40

SHEET NOTES:

1. For continuation inside WB girder, see sheets E-98 and E-114B.
2. For continuation inside EB girder, see sheet E-183 and E-114B.
3. Deleted.
4. For typical lighting fixture installation see Details 2 and 3, sheet E-123.
5. Pipe sleeve without conduit going through is spare. Contractor to provide plug or cap at both ends. For location see Section Y-Y on sheet E-73A.
6. Locate light fixture approximate half way between girder wall and girder walkway.
7. For wireway numbers, see sheet E-73.
8. DELETED
9. Terminate conduits at Terminal Box #TEL-6.
10. Terminate conduits at Terminal Box #COM-6.
11. See Detail 4, Dwg E-111B for Structural rack grounding.
12. #2 Bare Copper Wire in conduit, For installation details, see sheet E-73A.
13. Ground conductor shall be protected from damage when exposed outside the structure. Route ground conductor in liquidtight flexible metal conduit for protection, unless noted otherwise on plans. For additional installation details, see Detail 7, sheet E-111A.
14. Furnish and install BCP-6 and 1-25.4 mm innerduct per BASE fiber optic cable in TOS/COM cable tray and 3-25.4 mm innerducts per conduit 4212H and 4212G.
15. Furnish and install BASE fiber optic cable in innerduct, conduit and wireway to BCP-6. See sheets E-1100 and E-1101.

REQUEST FOR INFORMATION NOT ADDRESSED IN THIS CCO REMAIN IN FORCE

MARK	DATE	DESCRIPTIONS	BY	CH'D	CCO#
5	07/01/11	TOS MODIFICATIONS	RR	RG	81
4	03/01/11	BASE INTEGRATION	RSB	WB	150
3	11/20/09	ELECTRICAL GROUNDING	AWG RR	FW	75
2	06/25/09	SERVICE PLATFORM ELECTRICAL CHANGES	RR RY	RG FW	55
1	03/30/09	SERVICE PLATFORM ELECTRICAL CHANGES	RR MP	RG FW	55

REVISIONS

NOTES:

1. Reference: - For circuit, conduit/cable tray schedules, see sheets starting at E-401.
2. For wireway support details, see AS sheets.
3. For location of pipe sleeves at the utility platform crossbeams, see Typical Crossbeam Details sheets.
4. For platform elevations, see sheet E-73A.

THIS PLAN IS ACCURATE FOR ELECTRICAL WORK ONLY.

REGISTERED PROFESSIONAL ENGINEER SYN YEE CHIN No. 18186 Exp. 09/30/2011 ELECTRICAL STATE OF CALIFORNIA

FOR REVISION ONLY 4 5

REGISTERED PROFESSIONAL ENGINEER FADI WALIEDDINE No. 11465 Exp. 12/31/2009 ELECTRICAL STATE OF CALIFORNIA

FOR REVISION ONLY 1 2 3

CONTRACT CHANGE ORDER NO._____
SHEET_____ OF_____

DETAILS
SAS SUPERSTRUCTURE GIRDER WESTBOUND PLATFORM 6 CONDUIT, LIGHTING, AND GROUNDING PLAN

SCALE AS NOTED

E-116

ALL DIMENSIONS ARE IN MILLIMETERS UNLESS OTHERWISE SHOWN.

FOR REDUCED PLANS ORIGINAL SCALE IS IN MILLIMETERS 0 20 40 60 80

DGN FILE =>04-0120f1_0168R05.dgn
USERNAME =>llorico

CU 04251 | EA 0120F1

DATE PLOTTED => 05-JUL-2011
TIME PLOTTED => 14:55

LAST REVISION 00-00-00

DRAFT 1 (03/01/11)

STATE OF CALIFORNIA - DEPARTMENT OF TRANSPORTATION

Caltrans

DESIGN OVERSIGHT BEHZAD GOLEMOHAMMADI

CALCULATED/DESIGNED BY JP | DATE 08/01 | REVISED BY
CHECKED BY BL | 11/01 | REVISED

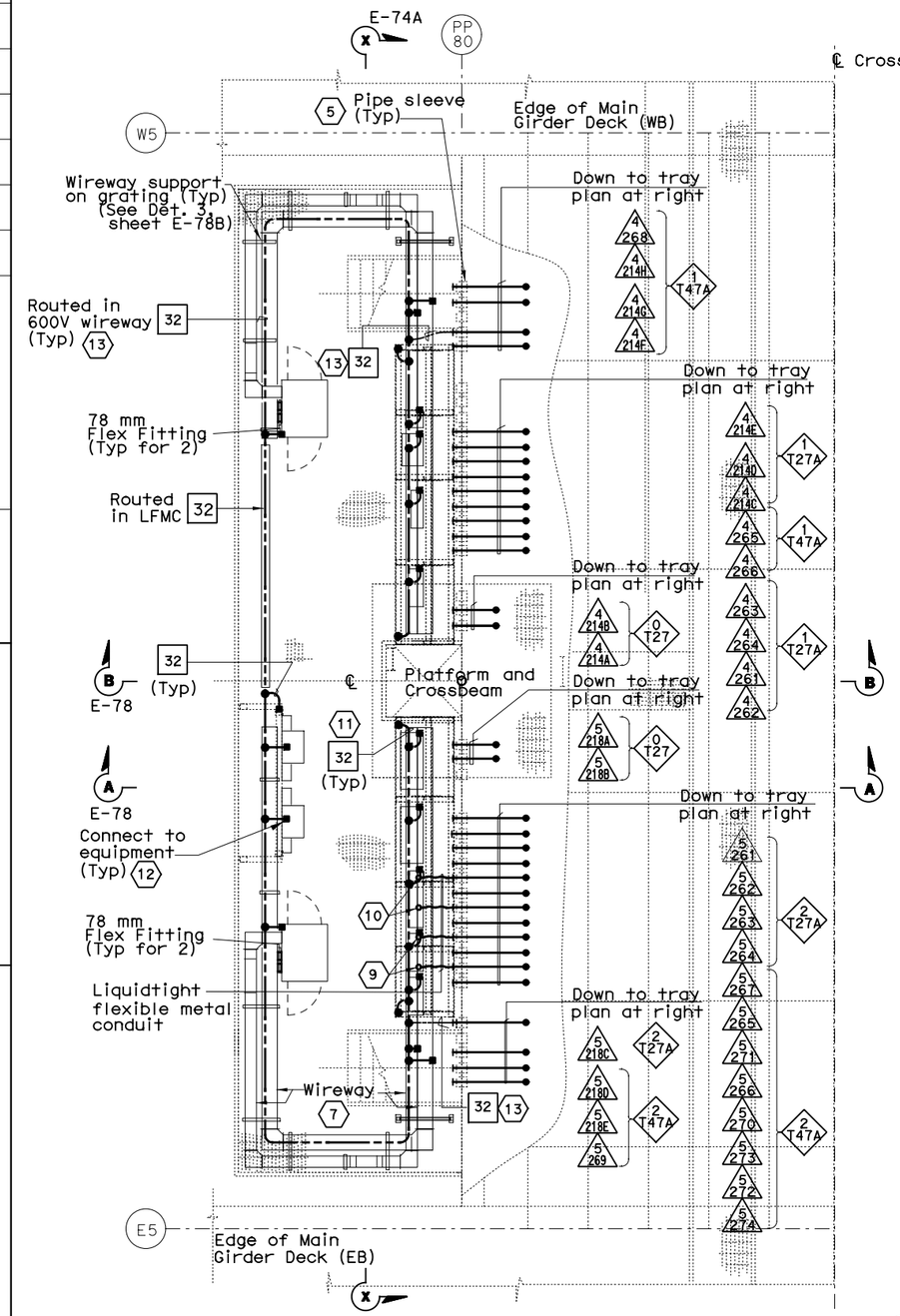

WIREWAY AND CONDUIT PLAN AT SERVICE PLATFORM

SCALE 1:40

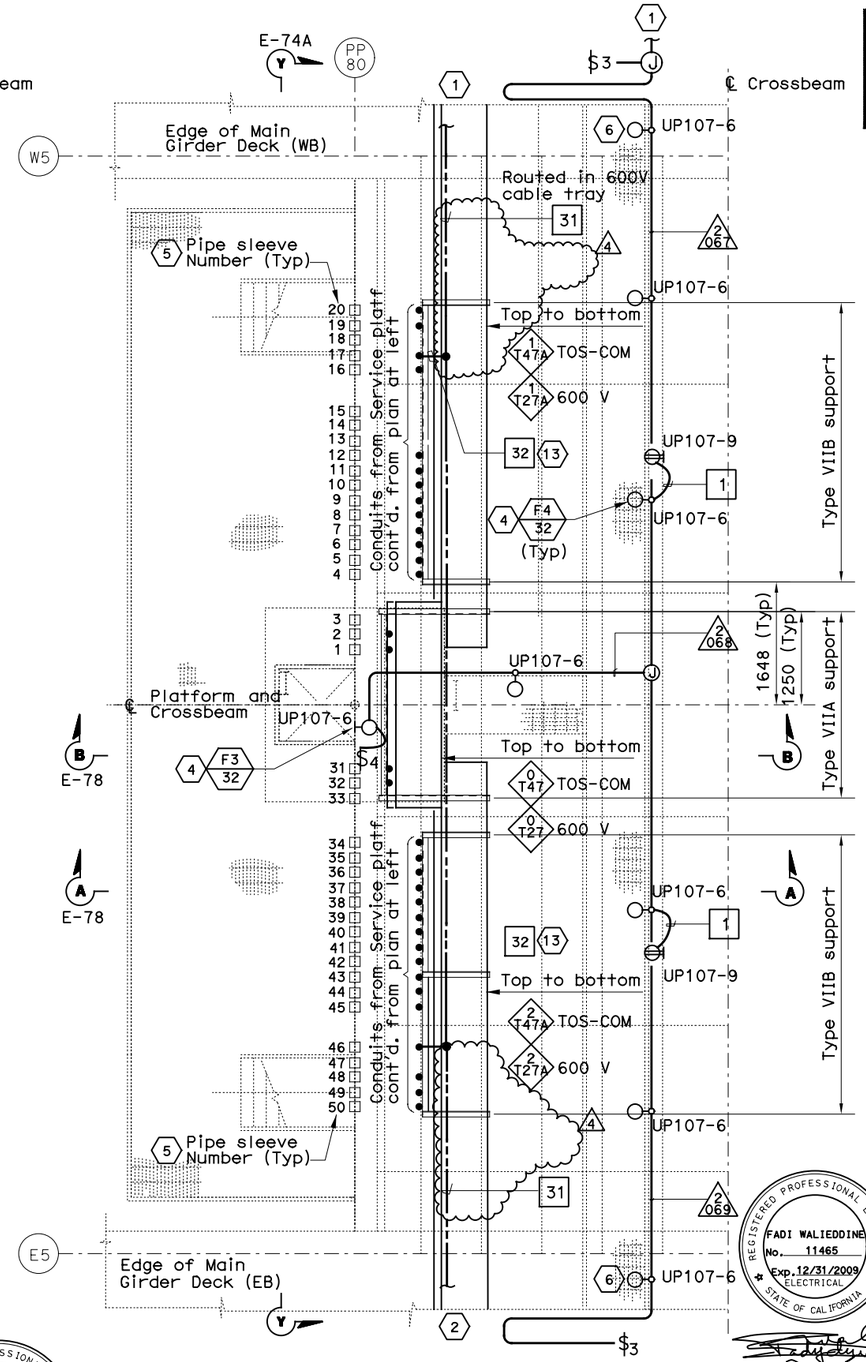

CABLE TRAY AND CONDUIT PLAN INSIDE CROSSBEAM

SCALE 1:40

DIST	COUNTY	ROUTE	KILOMETER POST TOTAL PROJECT	SHEET No.	TOTAL SHEETS
04	SF	80	13.2/13.9	169 R4	1204

REGISTERED ELECTRICAL ENGINEER 12/19/02 DATE

12-6-04
PLANS APPROVAL DATE

PB POWER, Inc.
A Parsons Brinckerhoff Company
303 Second St., Suite 700N
San Francisco, CA 94107-1317

REGISTERED PROFESSIONAL ENGINEER JENS ERLINGSSON No. 8249 Exp. 9/30/06 ELECTRICAL STATE OF CALIFORNIA

The State of California or its officers or agents shall not be responsible for the accuracy or completeness of electronic copies of this plan sheet.

Caltrans now has a web site! To get to the web site, go to http://www.dot.ca.gov

SHEET NOTES:

1. For continuation inside WB girder, see sheets E-99 and E-114B.
2. For continuation inside EB girder, see sheet E-184 and E-114B.
3. Deleted.
4. For typical lighting fixture installation see Details 2 and 3, sheet E-123.
5. Pipe sleeve without conduit going through is spare. Contractor to provide plug or cap at both ends. For location see Section Y-Y on sheet E-74A.
6. Locate light fixture approximate half way between girder wall and girder walkway.
7. For wireway numbers, see sheet E-74.
8. DELETED
9. Terminate conduits at Terminal Box #TEL-7.
10. Terminate conduits at Terminal Box #COM-7.
11. See Detail 4, Dwg E-111B for Structural rack grounding.
12. #2 Bare Copper Wire in conduit, For installation details, see sheet E-74A.
13. Ground conductor shall be protected from damage when exposed outside the structure. Route ground conductor in liquidtight flexible metal conduit for protection, unless noted otherwise on plans. For additional installation details, see Detail 7, sheet E-111A.

NOTES:

1. Reference: - For circuit, conduit/cable tray schedules, see sheets starting at E-401.
2. For wireway support details, see AS sheets.
3. For location of pipe sleeves at the utility platform crossbeams, see Typical Crossbeam Details sheets.
4. For platform elevations, see sheet E-74A.

REQUEST FOR INFORMATION NOT ADDRESSED IN THIS CCO REMAIN IN FORCE

MARK	DATE	DESCRIPTIONS	BY	CH'D	CCO#
4	07/01/11	TOS MODIFICATIONS	RR	RG	81
3	11/20/09	ELECTRICAL GROUNDING	AWG RR	RG FW	75
2	06/25/09	SERVICE PLATFORM ELECTRICAL CHANGES	RR RY	RG FW	55
1	03/30/09	SERVICE PLATFORM ELECTRICAL CHANGES	RR MP	RG FW	55

REVISIONS

REGISTERED PROFESSIONAL ENGINEER FADI WALIEDDINE No. 11465 Exp. 12/31/2009 ELECTRICAL STATE OF CALIFORNIA

FOR REVISION ONLY 1 2 3

REGISTERED PROFESSIONAL ENGINEER SYN YEE CHIN No. 18186 Exp. 09/30/2011 ELECTRICAL STATE OF CALIFORNIA

FOR REVISION ONLY 4

CONTRACT CHANGE ORDER NO._____
SHEET____ OF____

DETAILS
SAS SUPERSTRUCTURE GIRDER WESTBOUND PLATFORM 7 CONDUIT, LIGHTING, AND GROUNDING PLAN

SCALE AS NOTED

E-117

STATE OF CALIFORNIA - DEPARTMENT OF TRANSPORTATION

DESIGN OVERSIGHT: BEHZAD GOLEMOHAMMADI

CALCULATED/DESIGNED BY | CHECKED BY | REVISED

THIS PLAN IS ACCURATE FOR ELECTRICAL WORK ONLY.

ALL DIMENSIONS ARE IN MILLIMETERS UNLESS OTHERWISE SHOWN.

FOR REDUCED PLANS ORIGINAL SCALE IS IN MILLIMETERS 0 20 40 60 80

DGN FILE =>04-0120f1_0169R04.dgn
USERNAME =>llorico

CU 04251 | EA 0120F1

LAST REVISION 00-00-00 | DATE PLOTTED => 05-JUL-2011 | TIME PLOTTED => 14:55

DIST	COUNTY	ROUTE	KILOMETER POST TOTAL PROJECT	SHEET No	TOTAL SHEETS
04	SF	80	13.2/13.9	170 R4	1204

REGISTERED ELECTRICAL ENGINEER 12/19/02 DATE

12-6-04
PLANS APPROVAL DATE

REGISTERED PROFESSIONAL ENGINEER JENS ERLINGSSON No. 8249 Exp. 9/30/06 ELECTRICAL STATE OF CALIFORNIA

PB POWER, Inc.
A Parsons Brinckerhoff Company
303 Second St., Suite 700N
San Francisco, CA 94107-1317

The State of California or its officers or agents shall not be responsible for the accuracy or completeness of electronic copies of this plan sheet.

Caltrans now has a web site! To get to the web site, go to http://www.dot.ca.gov

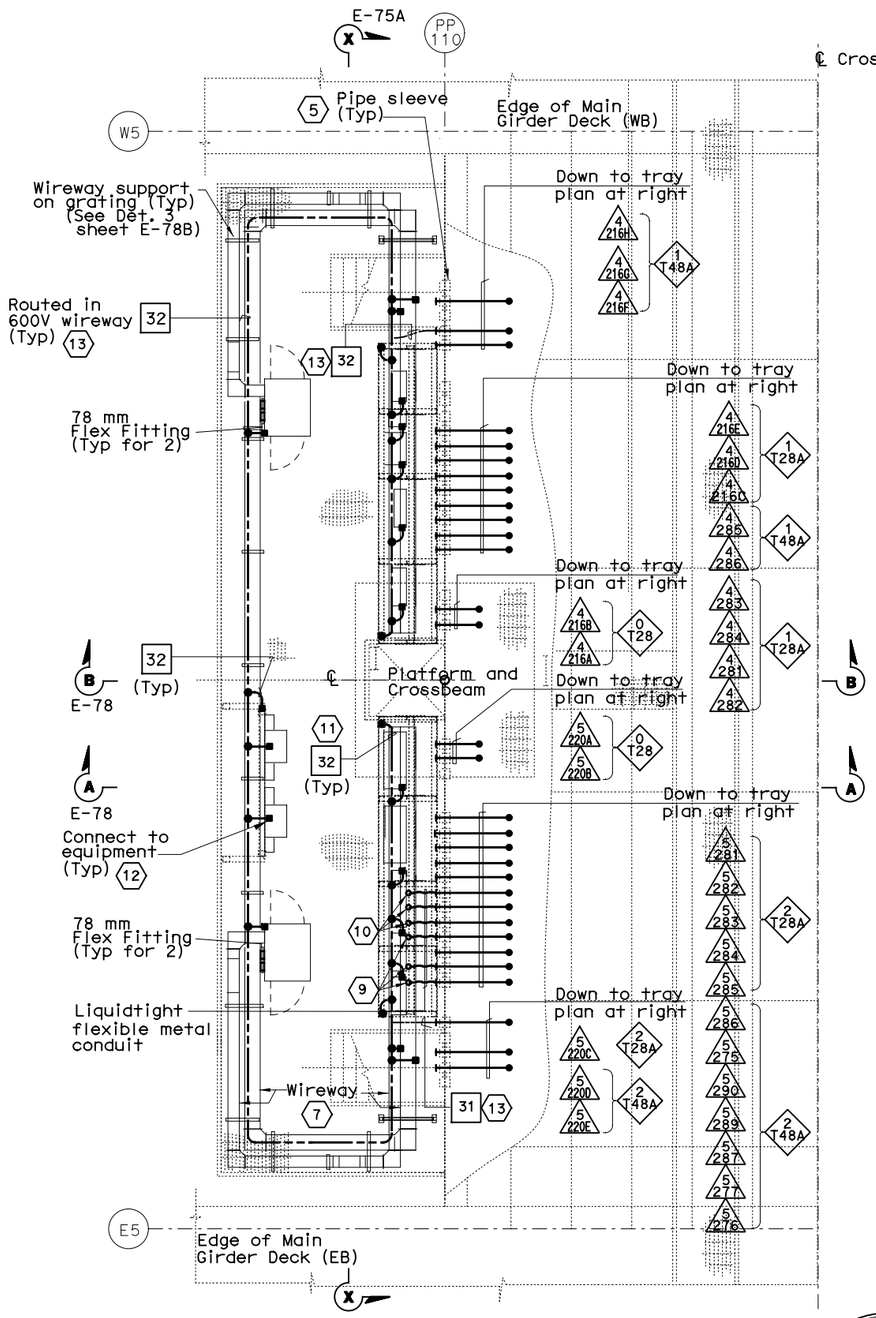

WIREWAY AND CONDUIT PLAN AT SERVICE PLATFORM

SCALE 1:40

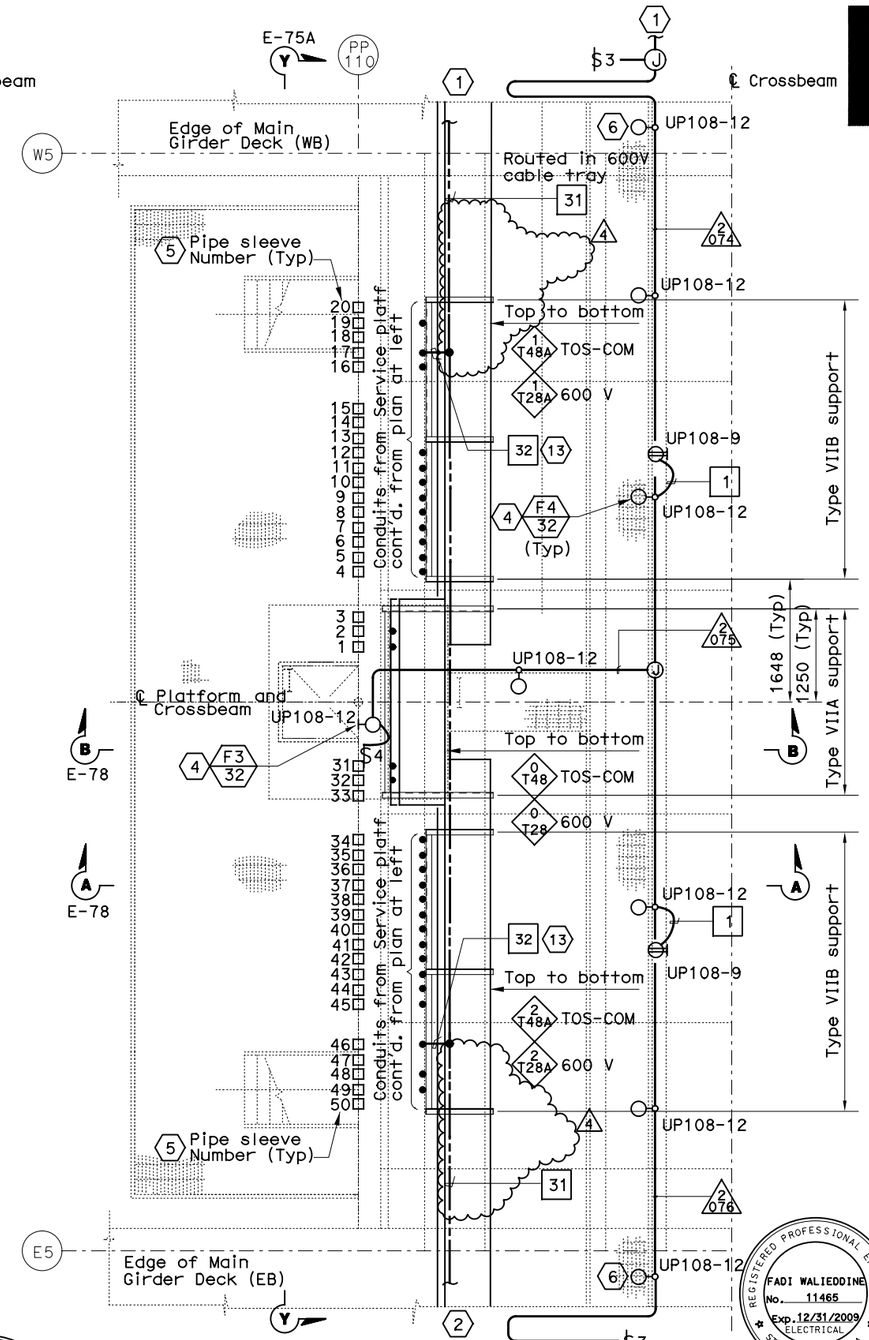

CABLE TRAY AND CONDUIT PLAN INSIDE CROSSBEAM

SCALE 1:40

REGISTERED PROFESSIONAL ENGINEER SYN YEE CHIN No. 18186 Exp. 09/30/2011 ELECTRICAL STATE OF CALIFORNIA

Syn Yee Chin
FOR REVISION ONLY

REGISTERED PROFESSIONAL ENGINEER FADI WALIEDDINE No. 11465 Exp. 12/31/2009 ELECTRICAL STATE OF CALIFORNIA

FOR REVISION ONLY

SHEET NOTES:

1. For continuation inside WB girder, see sheets E-100 and E-114B.
2. For continuation inside EB girder, see sheet E-185 and E-114B.
3. Deleted.
4. For typical lighting fixture installation see Details 2 and 3, sheet E-123.
5. Pipe sleeve without conduit going through is spare. Contractor to provide plug or cap at both ends. For location see Section Y-Y on sheet E-75A.
6. Locate light fixture approximate half way between girder wall and girder walkway.
7. For wireway numbers, see sheet E-75.
8. DELETED
9. Terminate conduits at Terminal Box #TEL-8.
10. Terminate conduits at Terminal Box #COM-8.
11. See Detail 4, Dwg E-111B for Structural rack grounding.
12. #2 Bare Copper Wire in conduit, For installation details, see sheet E-75A.
13. Ground conductor shall be protected from damage when exposed outside the structure. Route ground conductor in liquidtight flexible metal conduit for protection, unless noted otherwise on plans. For additional installation details, see Detail 6, sheet E-111A.

NOTES:

1. Reference:- For circuit, conduit/cable tray schedules, see sheets starting at E-401.
2. For wireway support details, see AS sheets.
3. For location of pipe sleeves at the utility platform crossbeams, see Typical Crossbeam Details sheets.

REQUEST FOR INFORMATION NOT ADDRESSED IN THIS CCO REMAIN IN FORCE

MARK	DATE	DESCRIPTIONS	BY	CH'D	CCO#
4	07/01/11	TOS MODIFICATIONS	RR	RG	81
3	11/20/09	ELECTRICAL GROUNDING	AWG RR	RG FW	75
2	06/25/09	SERVICE PLATFORM ELECTRICAL CHANGES	RR RY	RG FW	55
1	03/30/09	SERVICE PLATFORM ELECTRICAL CHANGES	RR MP	RG FW	55

REVISIONS

CONTRACT CHANGE ORDER NO._____
SHEET_____ OF_____

DETAILS
SAS SUPERSTRUCTURE GIRDER WESTBOUND PLATFORM 8 CONDUIT, LIGHTING, AND GROUNDING PLAN

SCALE AS NOTED

E-118

STATE OF CALIFORNIA - DEPARTMENT OF TRANSPORTATION
Caltrans

DESIGN OVERSIGHT
BEHZAD GOLEMOHAMMADI

CALCULATED/ DESIGNED BY	JP	DATE 7/01	REVISED BY
CHECKED BY	BL	12/01	DATE REVISED

THIS PLAN IS ACCURATE FOR ELECTRICAL WORK ONLY.

ALL DIMENSIONS ARE IN MILLIMETERS UNLESS OTHERWISE SHOWN.

FOR REDUCED PLANS ORIGINAL SCALE IS IN MILLIMETERS 0 20 40 60 80

DGN FILE =>04-0120f1_0170R04.dgn
USERNAME =>llorico

CU 04251 | EA 0120F1

LAST REVISION 00-00-00
DATE PLOTTED => 06-JUL-2011
TIME PLOTTED => 14:55

DIST	COUNTY	ROUTE	KILOMETER POST TOTAL PROJECT	SHEET No	TOTAL SHEETS
04	SF	80	13.2/13.9	216 R2	1204

REGISTERED ELECTRICAL ENGINEER 12/19/02 DATE

12-6-04
PLANS APPROVAL DATE

REGISTERED PROFESSIONAL ENGINEER JENS ERLINGSSON No. 8249 Exp. 9/30/06 ELECTRICAL STATE OF CALIFORNIA

PB POWER, Inc.
A Parsons Brinckerhoff Company
303 Second St., Suite 700N
San Francisco, CA 94107-1317

The State of California or its officers or agents shall not be responsible for the accuracy or completeness of electronic copies of this plan sheet.

Caltrans now has a web site! To get to the web site, go to http://www.dot.ca.gov

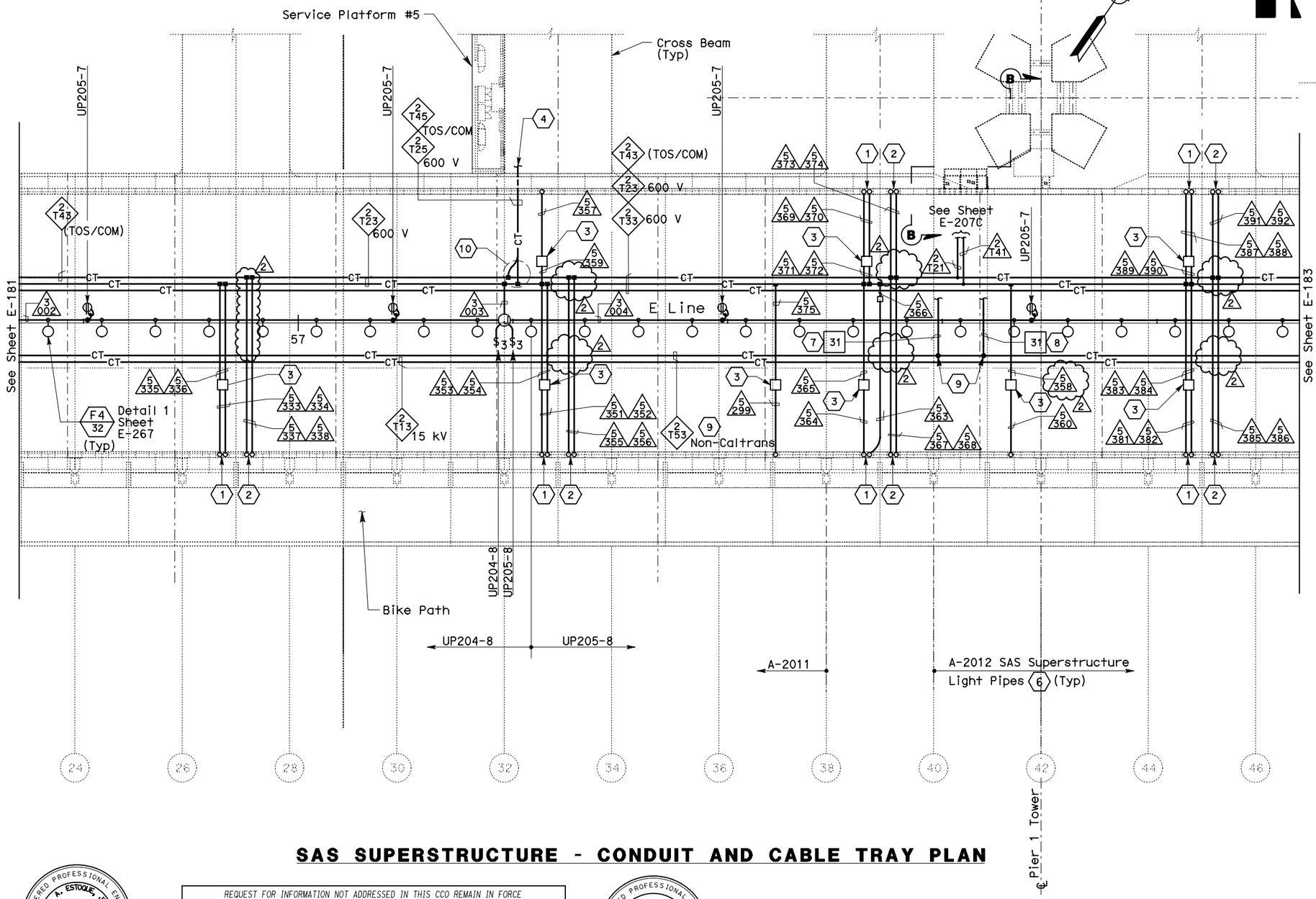

SAS SUPERSTRUCTURE - CONDUIT AND CABLE TRAY PLAN

SHEET NOTES:

1. Conduit up to PB-LTG located in barrier, see sheet E-136.
2. Conduit up to PB-COM located in barrier, see sheet E-136.
3. PB-2A, locate on top of floor.
4. For cable tray run and lighting inside crossbeam, see sheet E-115.
5. For lighting inside crossbeam, see sheet E-119.
6. For future light pipe, see sheets E-202 thru E-204. For light pipe schedule, see sheet E-217.
7. Routed inside conduit 3330A.
8. Routed inside conduit 3339A.
9. 250 kcmil copper grounding conductor exothermically welded to 500 kcmil system grounding conductor.
10. For fiber splice tray detail, refer to sheet E-355.

NOTES:

1. References:
   - TOS equipment is shown for conduit routing only. For typical details of TOS controller and devices, see sheets E-344 through E-357.
   - For types of pull boxes, splice boxes and enclosures, see sheet E-169.
   - For bridge grounding plan, see sheet E-196.
   - For circuit and conduit/cable tray schedules, see sheets starting at E-401.
2. For other work related to items not shown on this sheet, see Electrical Special Provisions.
3. The girder lighting fixtures are shown diagrammatically. Contractor shall install fixtures at railing posts with a maximum of 8000 mm between fixtures. For types and typical lighting fixture installation details, see sheet E-206.
4. The cable trays are shown diagrammatically. For typical girder cable tray plans and sections, see sheets E-207 and E-208.
5. For Section B-B, see sheet E-264A.

REGISTERED PROFESSIONAL ENGINEER S. A. ESTOQUE, JR. No. E-10151 Exp. 12/31/2008 ELECTRICAL STATE OF CALIFORNIA 1

FOR REVISION ONLY

REGISTERED PROFESSIONAL ENGINEER SYN YEE CHIN No. 18186 Exp. 09/30/2011 ELECTRICAL STATE OF CALIFORNIA 2

FOR REVISION ONLY

REQUEST FOR INFORMATION NOT ADDRESSED IN THIS CCO REMAIN IN FORCE

MARK	DATE	DESCRIPTIONS	BY	CH'D	CCO#
2	07/01/11	TOS MODIFICATIONS	RR	RG	81
1	02/25/08	CABLE TRAY CHANGES	MP	RG SE	42S1

REVISIONS

CONTRACT CHANGE ORDER NO._____
SHEET _____ OF _____

THIS PLAN IS ACCURATE FOR ELECTRICAL WORK ONLY.

SAS SUPERSTRUCTURE GIRDER EASTBOUND
LIGHTING AND ELECTRICAL SYSTEMS

SCALE 1:200

E-182

DATE	REVISED BY	DATE	REVISED
08/02		08/02	

CALCULATED/ DESIGNED BY	EDC	CHECKED BY	CYF

DESIGN OVERSIGHT
BEHZAD GOLEMOHAMMADI

STATE OF CALIFORNIA - DEPARTMENT OF TRANSPORTATION
Caltrans

LAST REVISION 00-00-00
DATE PLOTTED => 05-JUL-2011
TIME PLOTTED => 07:14:55

FOR REDUCED PLANS ORIGINAL SCALE IS IN MILLIMETERS 0 20 40 60 80

DGN FILE =>04-0120f1_0216R02.dgn
USERNAME =>llorico

CU 04251 | EA 0120F1

DIST	COUNTY	ROUTE	KILOMETER POST TOTAL PROJECT	SHEET No.	TOTAL SHEETS
04	SF	80	13.2/13.9	219 R3	1204

REGISTERED ELECTRICAL ENGINEER 12/19/02 DATE

12-6-04
PLANS APPROVAL DATE

REGISTERED PROFESSIONAL ENGINEER JENS ERLINGSSON No. 8249 Exp. 9/30/06 ELECTRICAL STATE OF CALIFORNIA

PB POWER, Inc.
A Parsons Brinckerhoff Company
303 Second St., Suite 700N
San Francisco, CA 94107-1317

The State of California or its officers or agents shall not be responsible for the accuracy or completeness of electronic copies of this plan sheet.

Caltrans now has a web site! To get to the web site, go to http://www.dot.ca.gov

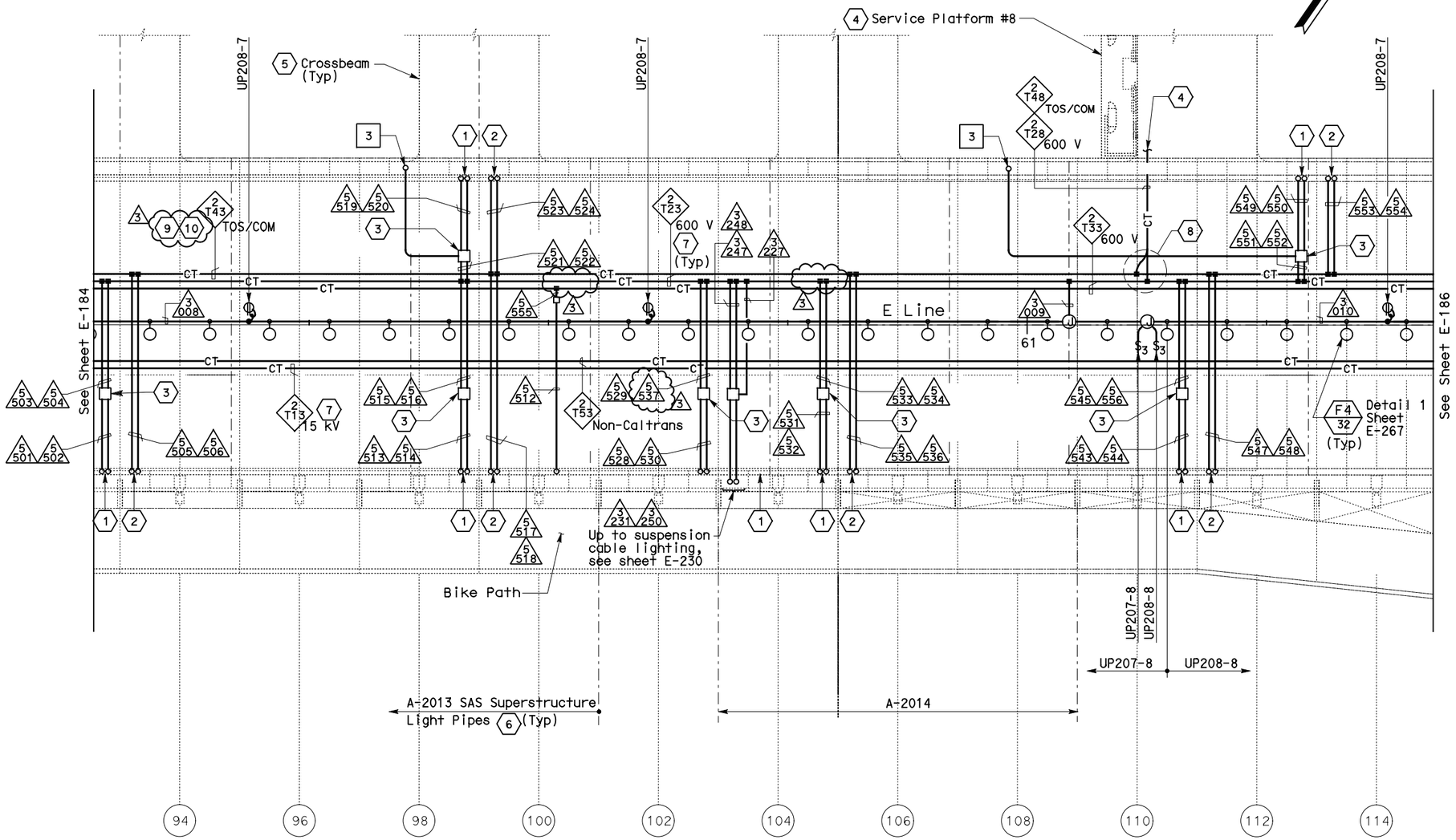

SHEET NOTES:

1. Conduit up to PB-LTG located in barrier, see sheet E-139.
2. Conduit up to PB-COM located in barrier, see sheet E-139.
3. PB-2A, locate on top of floor.
4. For cable tray run and lighting inside crossbeam, see sheet E-118.
5. For lighting inside crossbeam, see sheet E-119.
6. For future light pipes, see sheets E-202 thru E-204. For light pipe schedule, see sheet E-217.
7. For cable tray & ground bar support, refer to sheet E-208.
8. For fiber splice tray detail, refer to sheet E-355.
9. Furnish and install 1-25.4 mm innerduct per BASE fiber optic cable in TOS/COM cable tray.
10. Furnish and install BASE fiber optic cable in innerduct. See sheet E-1101.

NOTES:

1. References:
   - TOS equipment is shown for conduit routing only. For typical details of TOS controller and devices, see sheets E-344 through E-357.
   - For types of pull boxes, splice boxes and enclosures, see sheet E-169.
   - For bridge grounding plan, see sheet E-196.
   - For circuit and conduit/cable tray schedules, see sheets starting at E-401.
2. For other work related to items not shown on this sheet, see Electrical Special Provisions.
3. The girder lighting fixtures are shown diagrammatically.Contractor shall install fixtures at railing posts with a maximum of 8000 mm between fixtures. For types and typical lighting fixture installation details, see sheet E-206.
4. The cable trays are shown diagrammatically. For typical girder cable tray plans and sections, see sheets E-207 and E-208.

SAS SUPERSTRUCTURE - CONDUIT AND CABLE TRAY PLAN

REGISTERED PROFESSIONAL ENGINEER MANNELL FUMIO TAKAKI No. E 8651 Exp. 9/30/2008 ELECTRICAL STATE OF CALIFORNIA

FOR REVISION ONLY 1

REGISTERED PROFESSIONAL ENGINEER SYN YEE CHIN No. 18186 Exp. 09/30/2011 ELECTRICAL STATE OF CALIFORNIA

FOR REVISION ONLY 2 3

REQUEST FOR INFORMATION NOT ADDRESSED IN THIS CCO REMAIN IN FORCE

MARK	DATE	DESCRIPTIONS	BY	CH'D	CCO#
3	07/01/11	TOS MODIFICATIONS	RR	RG	81
2	03/01/11	BASE INTEGRATION	RSB	WB	150
1	02/19/08	ELECTRICAL MODIFICATIONS	MP EL	RR	42

REVISIONS

CONTRACT CHANGE ORDER NO._____
SHEET _____ OF _____

SAS SUPERSTRUCTURE GIRDER EASTBOUND
LIGHTING AND ELECTRICAL SYSTEMS
SCALE 1:200

E-185

THIS PLAN IS ACCURATE FOR ELECTRICAL WORK ONLY.

ALL DIMENSIONS ARE IN METERS UNLESS OTHERWISE SHOWN.

FOR REDUCED PLANS ORIGINAL SCALE IS IN MILLIMETERS 0 20 40 60 80

DGN FILE =>04-0120f1_0219R03.dgn
USERNAME =>llorico

CU 04251 EA 0120F1

DATE PLOTTED => 05-JUL-2011
TIME PLOTTED => 14:55

LAST REVISION 00-00-00

DRAFT 1 (03/01/11)

STATE OF CALIFORNIA - DEPARTMENT OF TRANSPORTATION
Caltrans

DESIGN OVERSIGHT
BEHZAD GOLEMOHAMMADI

CALCULATED/DESIGNED BY EDC
CHECKED BY CYF
DATE 08/02 08/02
REVISED BY DATE REVISED

REQUEST FOR INFORMATION NOT ADDRESSED IN THIS CCO REMAIN IN FORCE

MARK	DATE	DESCRIPTIONS	BY	CH'D	CCO#
3	09/12/11	TOS MODIFICATIONS	RG RR	ML	81
2	12/11/09	TOWER UTILITY PANELS	TW	RG FW	70
1	02/19/08	ELECTRICAL MODIFICATIONS	MP EL	RR	42

REVISIONS

CONTRACT CHANGE ORDER NO. _____
SHEET _____ OF _____

REGISTERED PROFESSIONAL ENGINEER
SEAN COUGHLIN
No. 12227
Exp. 9/30/08
ELECTRICAL
STATE OF CALIFORNIA
REGISTERED ELECTRICAL ENGINEER
1

REGISTERED PROFESSIONAL ENGINEER
FADI WALIEDDINE
No. 11465
Exp. 12/31/2009
ELECTRICAL
STATE OF CALIFORNIA
FOR REVISION ONLY
2

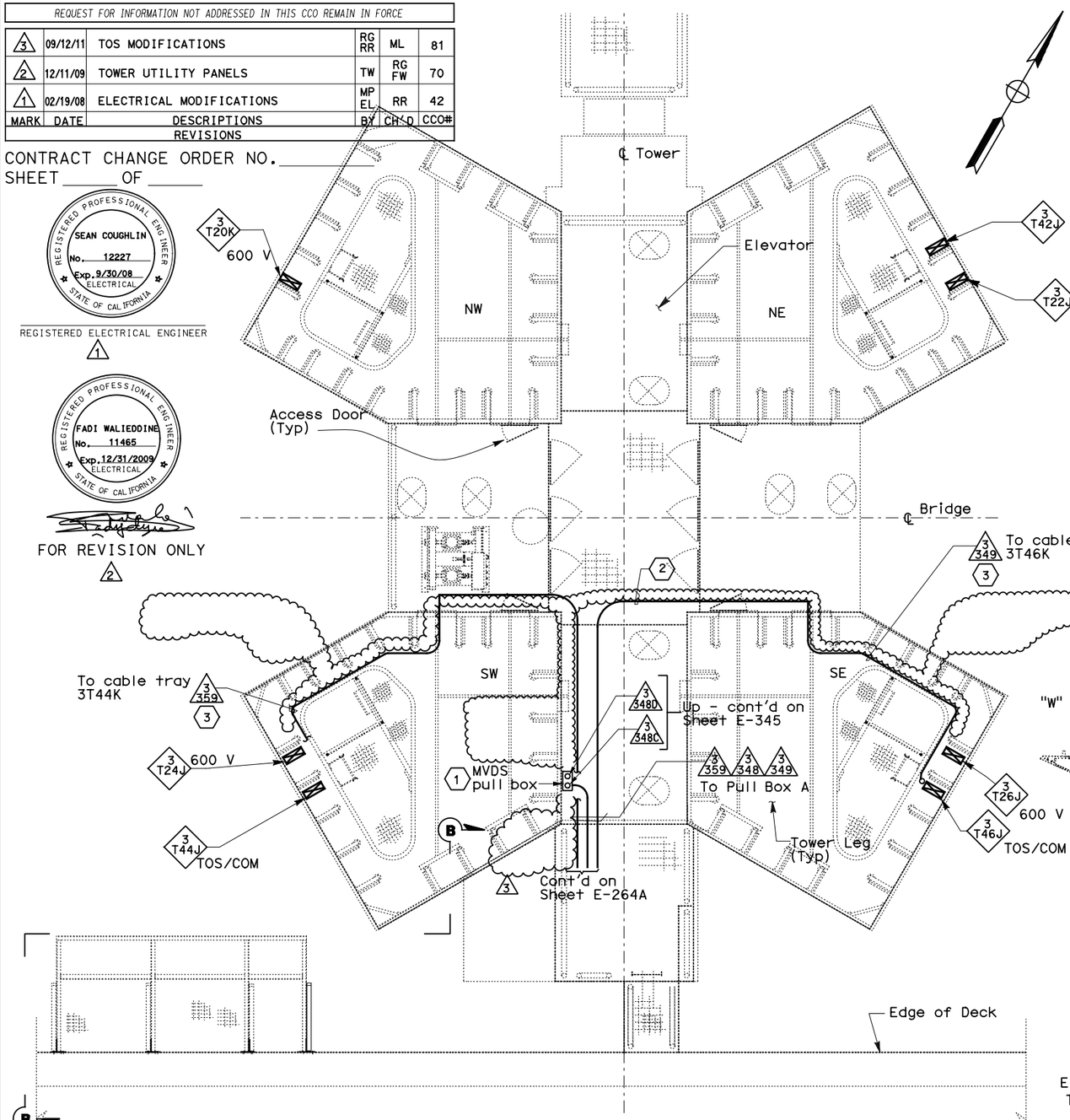

PLAN AT ACCESS PLATFORM AT ELEV 53.85 m

Some conduits and equipment are not shown for clarity.
See sheets E-264, E-264B, E-345, and E-366
for more conduit and equipment information.

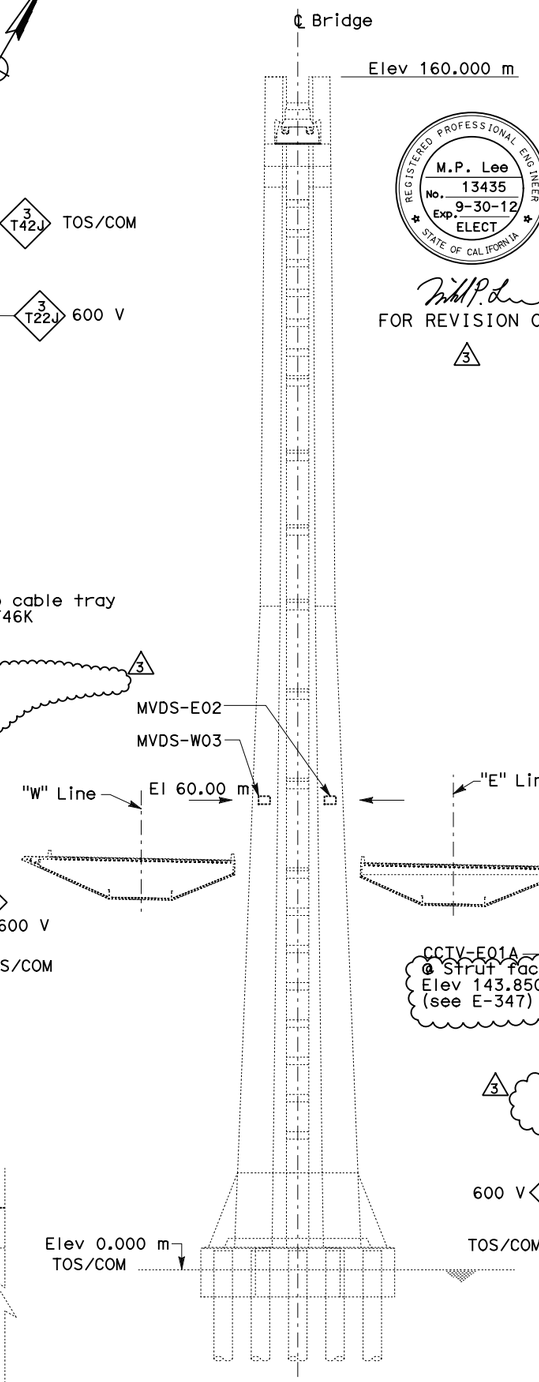

REGISTERED PROFESSIONAL ENGINEER
M.P. Lee
No. 13435
Exp. 9-30-12
ELECT
STATE OF CALIFORNIA
FOR REVISION ONLY
3

ELEVATION

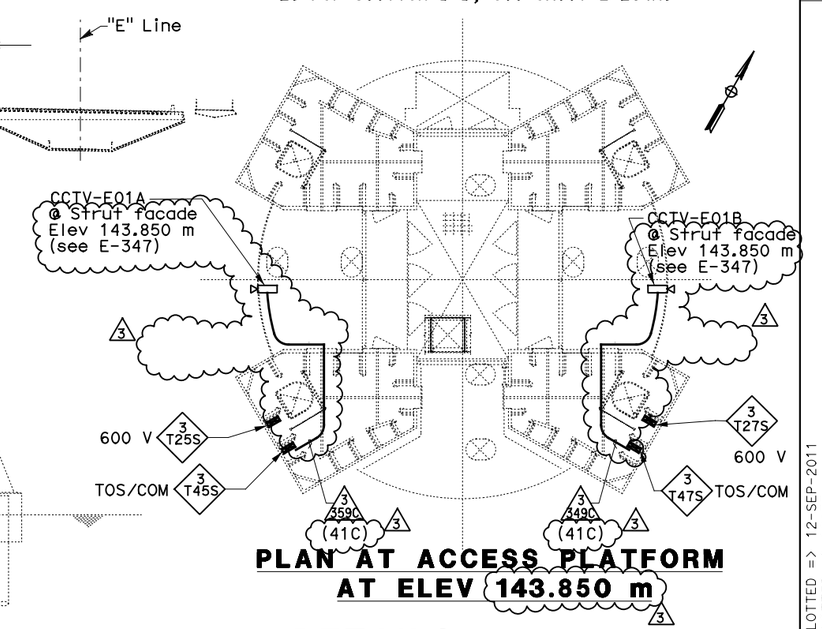

PLAN AT ACCESS PLATFORM AT ELEV 143.850 m

DETAILS
TOWER AND SUSPENSION CABLE TRAFFIC OPERATIONS SYSTEM CONDUIT

NO SCALE

SHEET NOTES:

1. For conduit routing to MVDS units. See elevation on this sheet and sheet E-345.
2. All conduits which thereafter cross the access walkways shall be raised to a level of at least 2438 above the grating to pass overhead, allowing free walkways on the remaining three quadrants of the platform. Door on north face of SE tower shaft shall remain accessible.
3. Conduits are at El 56.422 and connected to 600 V cable tray at this elevation inside respective tower shaft.

NOTES:

1. References:
   - For conduit and cable tray schedules, see sheets starting at E-401.
2. For Section B-B, see sheet E-264A.

THIS PLAN ACCURATE FOR ELECTRICAL WORK ONLY.

ALL DIMENSIONS IN MILLIMETERS UNLESS OTHERWISE SHOWN

DIST	COUNTY	ROUTE	KILOMETER POST TOTAL PROJECT	SHEET No	TOTAL SHEETS
04	SF	80	13.2/13.9	284 R3	1204

REGISTERED CIVIL ENGINEER — DATE 12/19/02

REGISTERED PROFESSIONAL ENGINEER
Michael Dahlin
No. 47186
Exp. 12/31/05
CIVIL
STATE OF CALIFORNIA

12-6-04
PLANS APPROVAL DATE

PB POWER, Inc.
A Parsons Brinckerhoff Company
303 Second St., Suite 700N
San Francisco, CA 94107-1317

The State of California or its officers or agents shall not be responsible for the accuracy or completeness of electronic copies of this plan sheet.

Caltrans now has a web site! To get to the web site, go to http://www.dot.ca.gov

Caltrans Metric

DATE	REVISED BY	DATE	REVISED
11/01	MD	12/01	PBF

CALCULATED/DESIGNED BY — CHECKED BY

DESIGN OVERSIGHT — BEHZAD GOLEMOHAMMADI

STATE OF CALIFORNIA - DEPARTMENT OF TRANSPORTATION
Caltrans

E-281

LAST REVISION 00-00-00 — DATE PLOTTED => 12-SEP-2011 TIME PLOTTED => 10:33

FOR REDUCED PLANS ORIGINAL SCALE IS IN MILLIMETERS 0 20 40 60 80

DGN FILE =>04-0120f1_0284R03.dgn
USERNAME =>llorico

CU 04251 — EA 0120F1

DIST	COUNTY	ROUTE	KILOMETER POST TOTAL PROJECT	SHEET No	TOTAL SHEETS
04	SF	80	13.2/13.9	320R1	1204

REGISTERED CIVIL ENGINEER — DATE 12/19/02

12-6-04
PLANS APPROVAL DATE

REGISTERED PROFESSIONAL ENGINEER — Michael Dahlin No. 47186 Exp. 12/31/05 CIVIL — STATE OF CALIFORNIA

PB Farradyne
A Parsons Brinckerhoff Company
303 Second St., Suite 700N
San Francisco, CA 94107-1317

The State of California or its officers or agents shall not be responsible for the accuracy or completeness of electronic copies of this plan sheet.

Caltrans now has a web site! To get to the web site, go to: http://www.dot.ca.gov

Caltrans Metric

REQUEST FOR INFORMATION NOT ADDRESSED IN THIS CCO REMAIN IN FORCE					
1	07/01/11	TOS MODIFICATIONS	RG RR	ML	81
MARK	DATE	DESCRIPTIONS	BY	CH'D	CCO#
REVISIONS					

CONTRACT CHANGE ORDER NO._____
SHEET _____ OF _____

REGISTERED PROFESSIONAL ENGINEER — M.P. Lee No. 13435 Exp. 9-30-12 ELECT — STATE OF CALIFORNIA

FOR REVISION ONLY

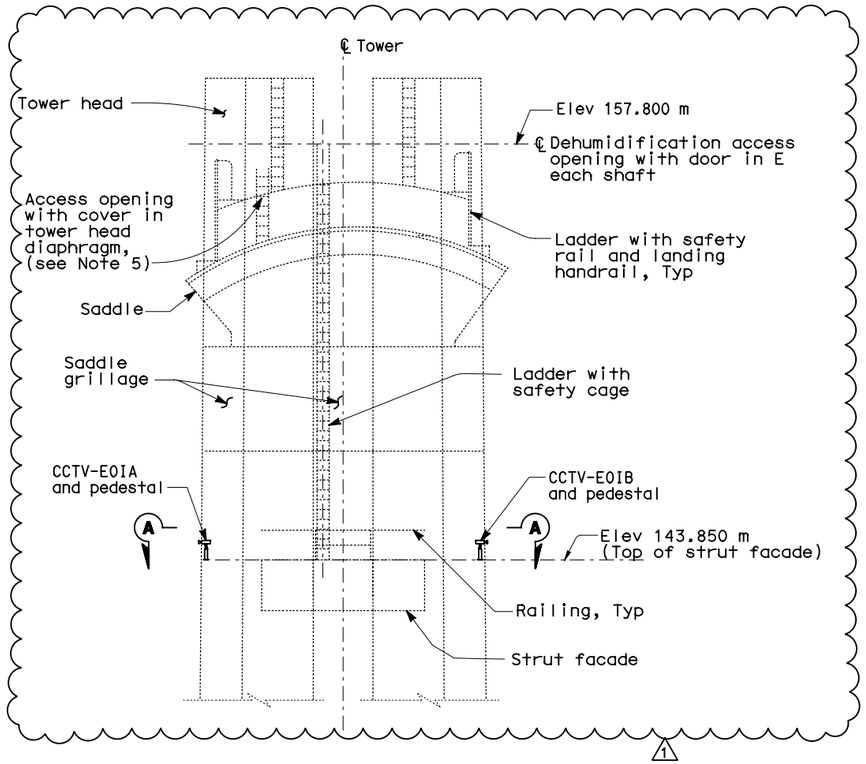

TOWER ELEVATION
SCALE 1:100

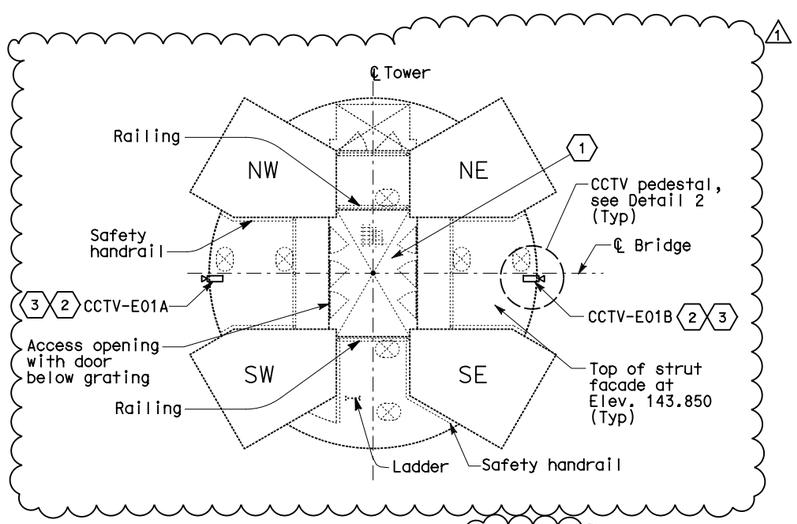

PLATFORM AT ELEVATION 143.850 M

SECTION A-A
SCALE 1:80

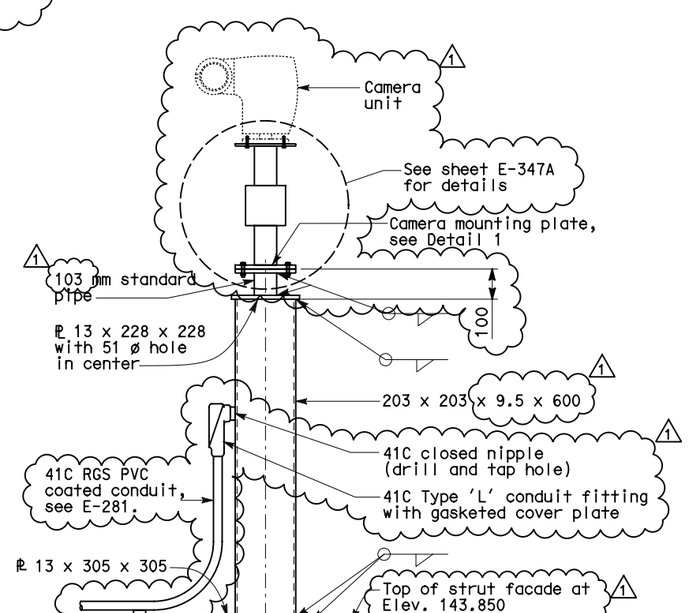

CCTV PEDESTAL - DETAIL 2
NOT TO SCALE

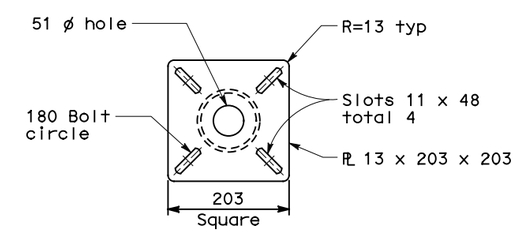

CAMERA MOUNTING PLATE - DETAIL 1
NOT TO SCALE

SHEET NOTES:

1. For all platform details, see structural plans.
2. See sheet E-349 for CCTV system layout.
3. See sheet E-281 for CCTV conduit routing.

CCTV SCHEDULE

ID #	STATION	CABINET ID #	TOWER REFERENCE SHEET	SERVICE PLATFORM REFERENCE SHEET
CCTV-E01A	E 57+70	TOS-6EA	E-281	E-73
CCTV-E01B	E 57+70	TOS-6WA	E-281	E-73

DETAILS
TRAFFIC OPERATIONS SYSTEM
CLOSED CIRCUIT TELEVISION CAMERA STATION
TOWER INSTALLATION
SCALE AS NOTED

E-347

THIS PLAN IS ACCURATE FOR ELECTRICAL WORK ONLY.

ALL DIMENSIONS IN MILLIMETERS UNLESS OTHERWISE SHOWN.

DATE	BY	REVISED	DATE REVISED
11/01	MD	PBF	12/01

CALCULATED/DESIGNED BY — CHECKED BY

DESIGN OVERSIGHT — BEHZAD GOLEMOHAMMADI

STATE OF CALIFORNIA - DEPARTMENT OF TRANSPORTATION — Caltrans

LAST REVISION 00-00-00 — DATE PLOTTED => 05-JUL-2011 — TIME PLOTTED => 14:55

DIST	COUNTY	ROUTE	KILOMETER POST TOTAL PROJECT	SHEET No	TOTAL SHEETS
04	SF	80	13.2/13.9	320S1	1204

REGISTERED ELECTRICAL ENGINEER 03/08/10 DATE

PLANS APPROVAL DATE

REGISTERED PROFESSIONAL ENGINEER M.P. Lee No. 13435 Exp. 9-30-12 ELECT STATE OF CALIFORNIA

PB AMERICAS, Inc.
A Parsons Brinckerhoff Company
303 Second St., Suite 700N
San Francisco, CA 94107-1317

The State of California or its officers or agents shall not be responsible for the accuracy or completeness of electronic copies of this plan sheet.

Caltrans now has a web site! To get to the web site, go to http://www.dot.ca.gov

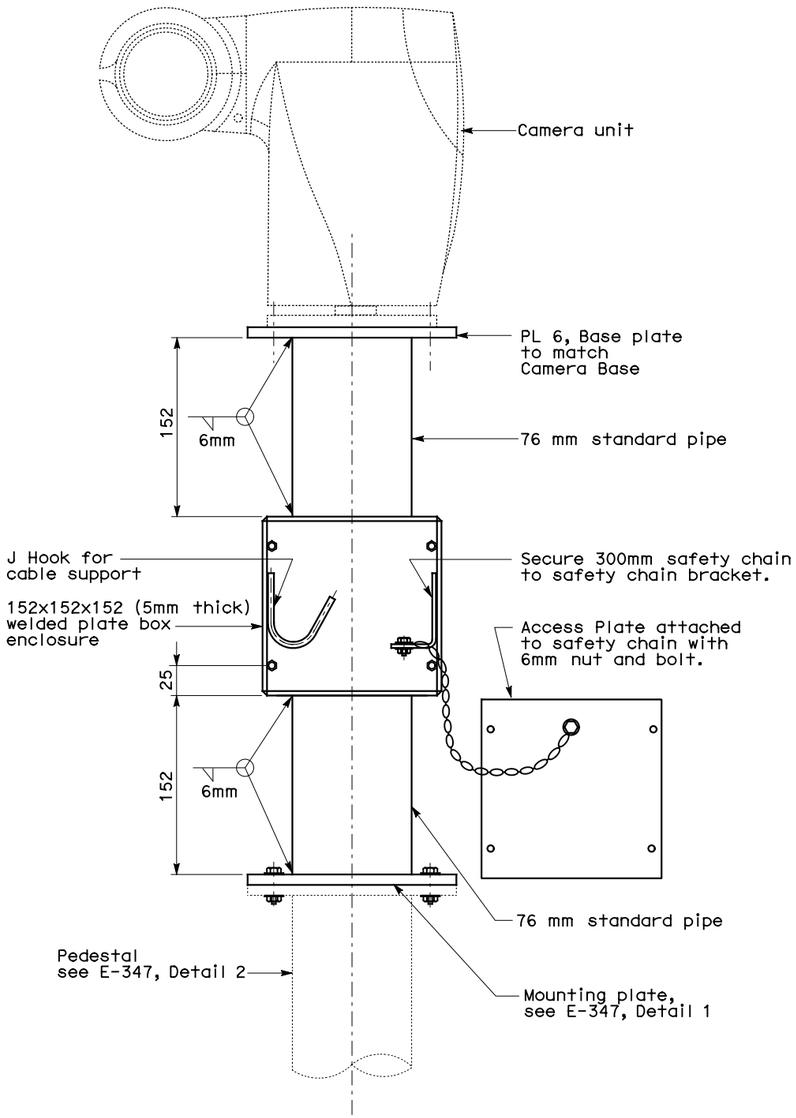

DETAIL 1
CCTV POLE MOUNTING ADAPTER

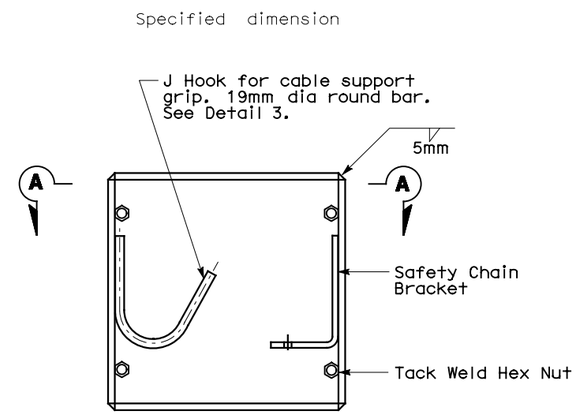

DETAIL 2
BOX ENCLOSURE

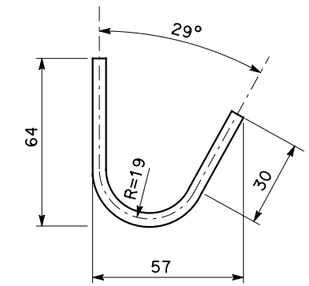

DETAIL 3
J HOOK

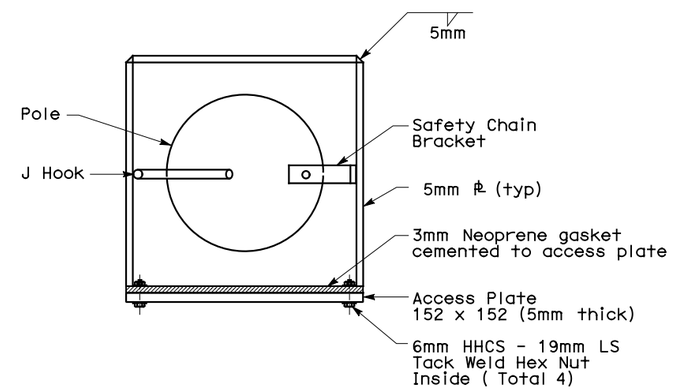

SECTION A-A

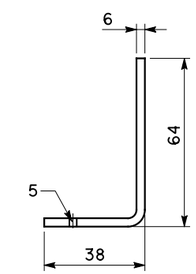

DETAIL 4
SAFETY CHAIN BRACKET

REQUEST FOR INFORMATION NOT ADDRESSED IN THIS CCO REMAIN IN FORCE

MARK	DATE	DESCRIPTIONS	BY	CH'D	CCO#
0	07/01/11	TOS MODIFICATIONS	RG RR	ML	81

REVISIONS

CONTRACT CHANGE ORDER NO._____
SHEET_____ OF _____

DETAILS
TRAFFIC OPERATIONS SYSTEM
CCTV POLE MOUNTING DETAILS

NO SCALE

E-347A

ALL DIMENSIONS ARE IN MILLIMETERS UNLESS OTHERWISE SHOWN

DESIGN OVERSIGHT: BEHZAD GOLEMOHAMMADI

CALCULATED/DESIGNED BY | CHECKED BY | DATE REVISED BY | DATE REVISED

STATE OF CALIFORNIA - DEPARTMENT OF TRANSPORTATION

Caltrans

FOR REDUCED PLANS ORIGINAL SCALE IS IN MILLIMETERS 0 20 40 60 80

DGN FILE =>04-0120f1_0320S01.dgn
USERNAME =>llorico

CU 04251 | EA 0120F1

LAST REVISION 00-00-00 | DATE PLOTTED => 05-JUL-2011 | TIME PLOTTED => 14:56

DIST	COUNTY	ROUTE	KILOMETER POST TOTAL PROJECT	SHEET No	TOTAL SHEETS
04	SF	80	13.2/13.9	321R1	1204

REGISTERED CIVIL ENGINEER — DATE 12/19/02

12-6-04
PLANS APPROVAL DATE

REGISTERED PROFESSIONAL ENGINEER — Michael Dahlin No. 47186 Exp. 12/31/05 CIVIL — STATE OF CALIFORNIA

PB Farradyne
A Parsons Brinckerhoff Company
303 Second St., Suite 700N
San Francisco, CA 94107-1317

The State of California or its officers or agents shall not be responsible for the accuracy or completeness of electronic copies of this plan sheet.

Caltrans now has a web site! To get to the web site, go to: http://www.dot.ca.gov

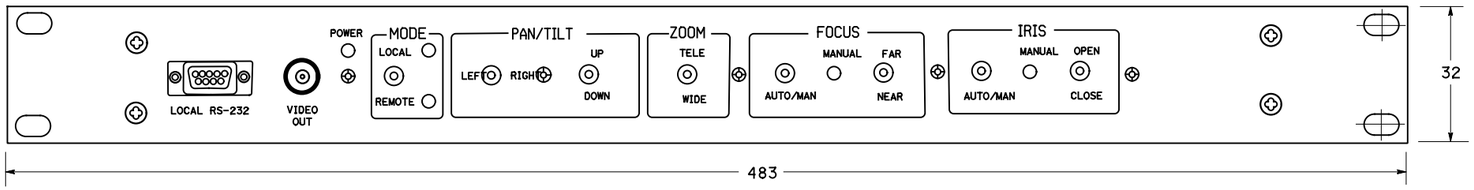

CCU FRONT PANEL LAYOUT

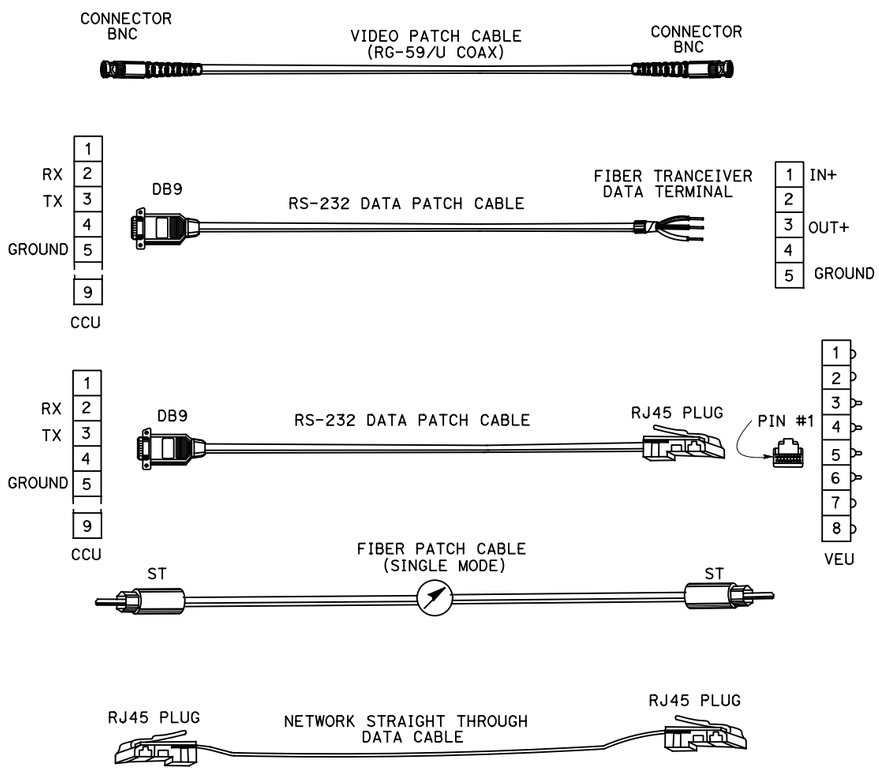

INTERFACE CABLE DETAILS

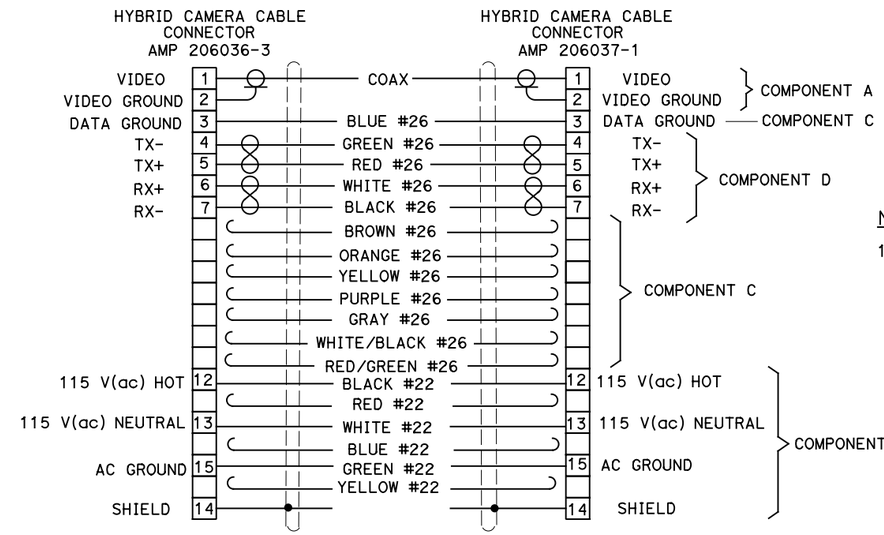

NOTES:

1. For CCTV Controller Cabinet wiring diagram, see E-349.

REGISTERED PROFESSIONAL ENGINEER — M.P. Lee No. 13435 Exp. 9-30-12 ELECT — STATE OF CALIFORNIA

1

FOR REVISION ONLY

COMPONENT	CONDUCTOR	DESCRIPTION
A	COAX	75 OHM, RG-59/U TYPE, STANDARD ANALOG VIDEO CABLE, 6 MM NOMINAL DIAMETER
B	6 CONDUCTOR	22 AWG, COPPER INSULATED CONDUCTOR, 1.22 MM NOMINAL DIAMETER, COLOR CODED: B1-BLACK, B2-RED, B3-GREEN, B4-WHITE, B5-BLUE, B6-YELLOW
C	8 CONDUCTOR	26 AWG, COPPER INSULATED CONDUCTOR, 0.94 MM NOMINAL DIAMETER, COLOR CODED: C1-BROWN, C2-BLUE, C3-ORANGE, C4-YELLOW, C5-PURPLE, C6-GRAY, C7-WHITE/BLACK, C8-RED/GREEN
D	4 CONDUCTOR	26 AWG, COPPER INSULATED CONDUCTOR, 0.94 MM NOMINAL DIAMETER, COLOR CODED: D1-BLACK & WHITE, D2-RED & GREEN

HYBRID CAMERA CABLE AND CONNECTORS DETAIL

REQUEST FOR INFORMATION NOT ADDRESSED IN THIS CCO REMAIN IN FORCE

MARK	DATE	DESCRIPTIONS	BY	CH'D	CCO#
1	07/01/11	TOS MODIFICATIONS	RG RR	ML	81

REVISIONS

CONTRACT CHANGE ORDER NO._____
SHEET _____ OF _____

1

ORIGINAL SHEET SUPERCEDED

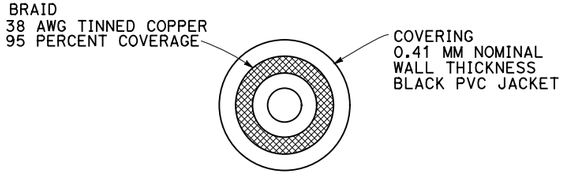

COMPONENT A

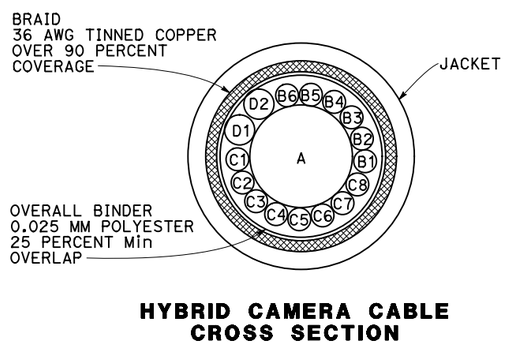

HYBRID CAMERA CABLE CROSS SECTION

DETAILS
TRAFFIC OPERATIONS SYSTEM
CLOSED CIRCUIT TELEVISION CAMERA EQUIPMENT
INTERCONNECTING CABLE ASSEMBLY

NO SCALE

E-348

THIS PLAN ACCURATE FOR ELECTRICAL WORK ONLY.

ALL DIMENSIONS ARE IN MILLIMETERS UNLESS OTHERWISE SHOWN

CALCULATED/ DESIGNED BY	MD	DATE 11/01	REVISED BY	DATE REVISED
CHECKED BY	PBF	12/01		

DESIGN OVERSIGHT — BEHZAD GOLEMOHAMMADI

STATE OF CALIFORNIA - DEPARTMENT OF TRANSPORTATION — Caltrans

LAST REVISION 00-00-00 — DATE PLOTTED => 05-JUL-2011 TIME PLOTTED => 14:56

FOR REDUCED PLANS ORIGINAL SCALE IS IN MILLIMETERS 0 20 40 60 80

DGN FILE =>04-0120f1_0321R01.dgn
USERNAME =>llorico

CU 04251 — EA 0120F1

DIST	COUNTY	ROUTE	KILOMETER POST TOTAL PROJECT	SHEET No	TOTAL SHEETS
04	SF	80	13.2/13.9	322R1	1204

REGISTERED CIVIL ENGINEER — DATE 12/19/02

12-6-04
PLANS APPROVAL DATE

REGISTERED PROFESSIONAL ENGINEER — Michael Dahlin No. 47186 Exp. 12/31/05 CIVIL — STATE OF CALIFORNIA

PB Farradyne
A Parsons Brinckerhoff Company
303 Second St., Suite 700N
San Francisco, CA 94107-1317

The State of California or its officers or agents shall not be responsible for the accuracy or completeness of electronic copies of this plan sheet.

Caltrans now has a web site! To get to the web site, go to: http://www.dot.ca.gov

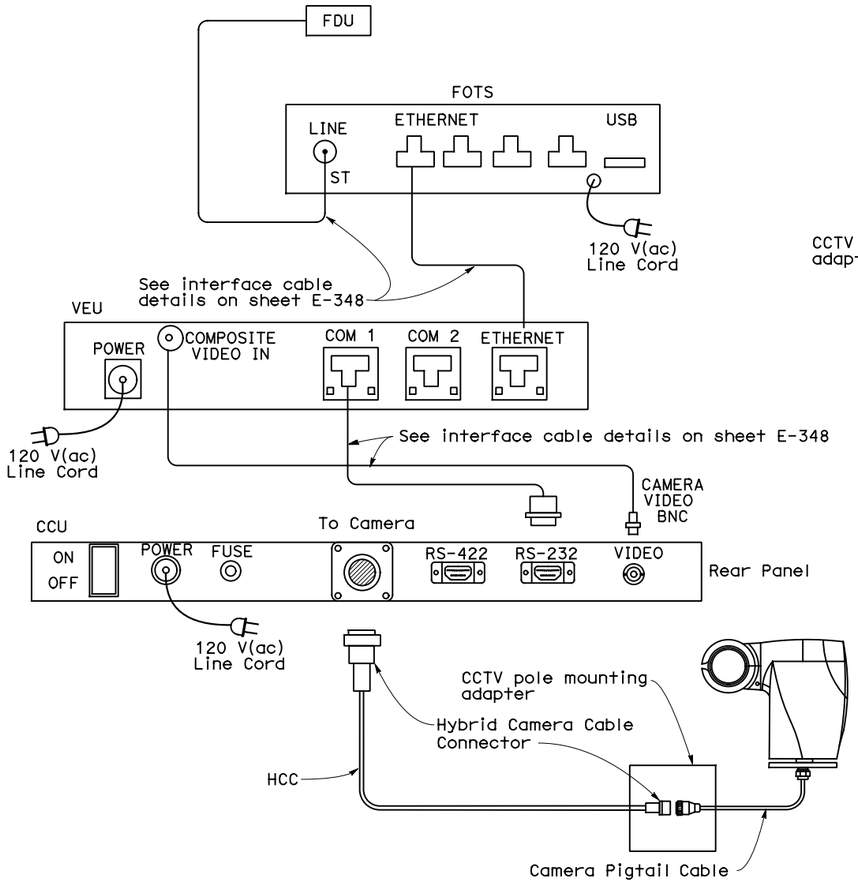

CCTV SYSTEM LAYOUT

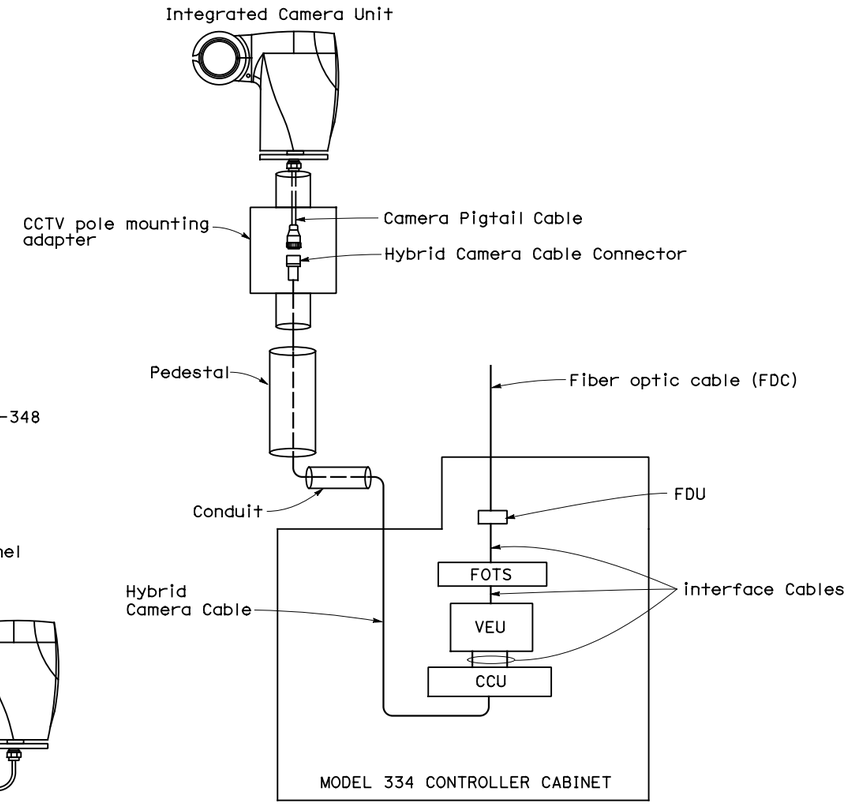

CCTV SYSTEM BLOCK DIAGRAM

HCC - HYBRID CAMERA CABLE
TBO - TERMINAL BLOCK O
PDA - POWER DISTRIBUTION ASSEMBLY
CCU - CAMERA CONTROL UNIT
VEU - VIDEO ENCODER UNIT
FOTS - FIBER OPTIC TRANSMITTERS
FDU - FIBER DISTRIBUTION UNIT

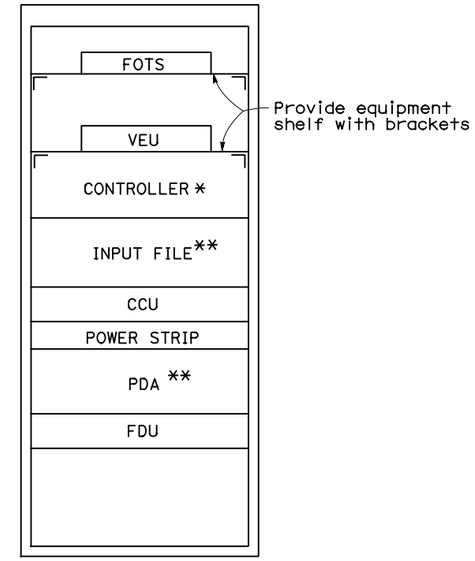

MODEL 334 CONTROLLER CABINET LAYOUT (FRONT VIEW)

* STATE-FURNISHED

** PDA AND INPUT FILE WILL BE INCLUDED ONLY WITH STATE-FURNISHED CONTROLLER CABINET.

1 **ORIGINAL SHEET SUPERCEDED**

NOTES:

1. Wiring diagram represents connection of one CCTV. Refer to CCTV Schedule for list of CCTV.
2. For CCTV pedestal mount detail, see E-347, Detail 2.
3. For CCTV pole mounting adapter detail, see E-347A.

CCTV SCHEDULE

ID #	STATION	CABINET ID #	TOWER REFERENCE SHEET	SERVICE PLATFORM REFERENCE SHEET
CCTV-E01A	E 57+70	TOS-6EA	E-281	E-73
CCTV-E01B	E 57+70	TOS-6WA	E-281	E-73

REGISTERED PROFESSIONAL ENGINEER — M.P. Lee No. 13435 Exp. 9-30-12 ELECT — STATE OF CALIFORNIA

1 FOR REVISION ONLY

REQUEST FOR INFORMATION NOT ADDRESSED IN THIS CCO REMAIN IN FORCE

MARK	DATE	DESCRIPTIONS	BY	CH'D	CCO#
1	07/01/11	TOS MODIFICATIONS	RG RR	ML	81

REVISIONS

CONTRACT CHANGE ORDER NO._____
SHEET _____ OF _____

DETAILS
TRAFFIC OPERATIONS SYSTEM
CLOSED CIRCUIT TELEVISION CAMERA CONTROLLER CABINET WIRING DIAGRAM

NO SCALE

E-349

THIS PLAN ACCURATE FOR ELECTRICAL WORK ONLY.

ALL DIMENSIONS ARE IN MILLIMETERS UNLESS OTHERWISE SHOWN

DATE	BY	REVISED BY	DATE REVISED
11/01	12/01		

CALCULATED/DESIGNED BY: MD — CHECKED BY: PBF

DESIGN OVERSIGHT: BEHZAD GOLEMOHAMMADI

STATE OF CALIFORNIA - DEPARTMENT OF TRANSPORTATION — Caltrans

FOR REDUCED PLANS ORIGINAL SCALE IS IN MILLIMETERS: 0 20 40 60 80

DGN FILE =>04-0120f1_0322R01.dgn
USERNAME =>llorico

CU 04251 — EA 0120F1

LAST REVISION 00-00-00 — DATE PLOTTED => 05-JUL-2011 — TIME PLOTTED => 14:56

DIST	COUNTY	ROUTE	KILOMETER POST TOTAL PROJECT	SHEET No	TOTAL SHEETS
04	SF	80	13.2/13.9	324R1	1204

REGISTERED CIVIL ENGINEER — DATE 12/19/02

12-6-04
PLANS APPROVAL DATE

REGISTERED PROFESSIONAL ENGINEER — Michael Dahlin — No. 47186 — Exp. 12/31/05 — CIVIL — STATE OF CALIFORNIA

PB Farradyne
A Parsons Brinckerhoff Company
303 Second St., Suite 700N
San Francisco, CA 94107-1317

The State of California or its officers or agents shall not be responsible for the accuracy or completeness of electronic copies of this plan sheet.

Caltrans now has a web site! To get to the web site, go to: http://www.dot.ca.gov

Caltrans Metric

⚠1 **ORIGINAL SHEET SUPERCEDED**

REGISTERED PROFESSIONAL ENGINEER — M.P. Lee — No. 13435 — Exp. 9-30-12 — ELECT — STATE OF CALIFORNIA

⚠1 FOR REVISION ONLY

REQUEST FOR INFORMATION NOT ADDRESSED IN THIS CCO REMAIN IN FORCE					
⚠1	07/01/11	TOS MODIFICATIONS	RG RR	ML	81
MARK	DATE	DESCRIPTIONS	BY	CH'D	CCO#
REVISIONS					

CONTRACT CHANGE ORDER NO._____
SHEET _____ OF _____

DETAILS
TRAFFIC OPERATIONS SYSTEM CONTROLLER CABINET CONFIGURATION
NO SCALE

E-352

THIS PLAN IS ACCURATE FOR ELECTRICAL WORK ONLY.

CALCULATED/ DESIGNED BY	MD	11/01	REVISED BY
CHECKED BY	PBF	12/01	DATE REVISED

DESIGN OVERSIGHT
BEHZAD GOLEMOHAMMADI

STATE OF CALIFORNIA - DEPARTMENT OF TRANSPORTATION
Caltrans

LAST REVISION 00-00-00
DATE PLOTTED => 05-JUL-2011
TIME PLOTTED => 14:56

FOR REDUCED PLANS ORIGINAL SCALE IS IN MILLIMETERS 0 20 40 60 80

DGN FILE =>04-0120f1_0324R01.dgn
USERNAME =>llorico

CU 04251

EA 0120F1

DIST	COUNTY	ROUTE	KILOMETER POST TOTAL PROJECT	SHEET No	TOTAL SHEETS
04	SF	80	13.2/13.9	325R1	1204

REGISTERED CIVIL ENGINEER 12/19/02 DATE

12-6-04
PLANS APPROVAL DATE

REGISTERED PROFESSIONAL ENGINEER Michael Dahlin No. 47186 Exp. 12/31/05 CIVIL STATE OF CALIFORNIA

PB Farradyne
A Parsons Brinckerhoff Company
303 Second St., Suite 700N
San Francisco, CA 94107-1317

The State of California or its officers or agents shall not be responsible for the accuracy or completeness of electronic copies of this plan sheet.

Caltrans now has a web site! To get to the web site, go to: http://www.dot.ca.gov

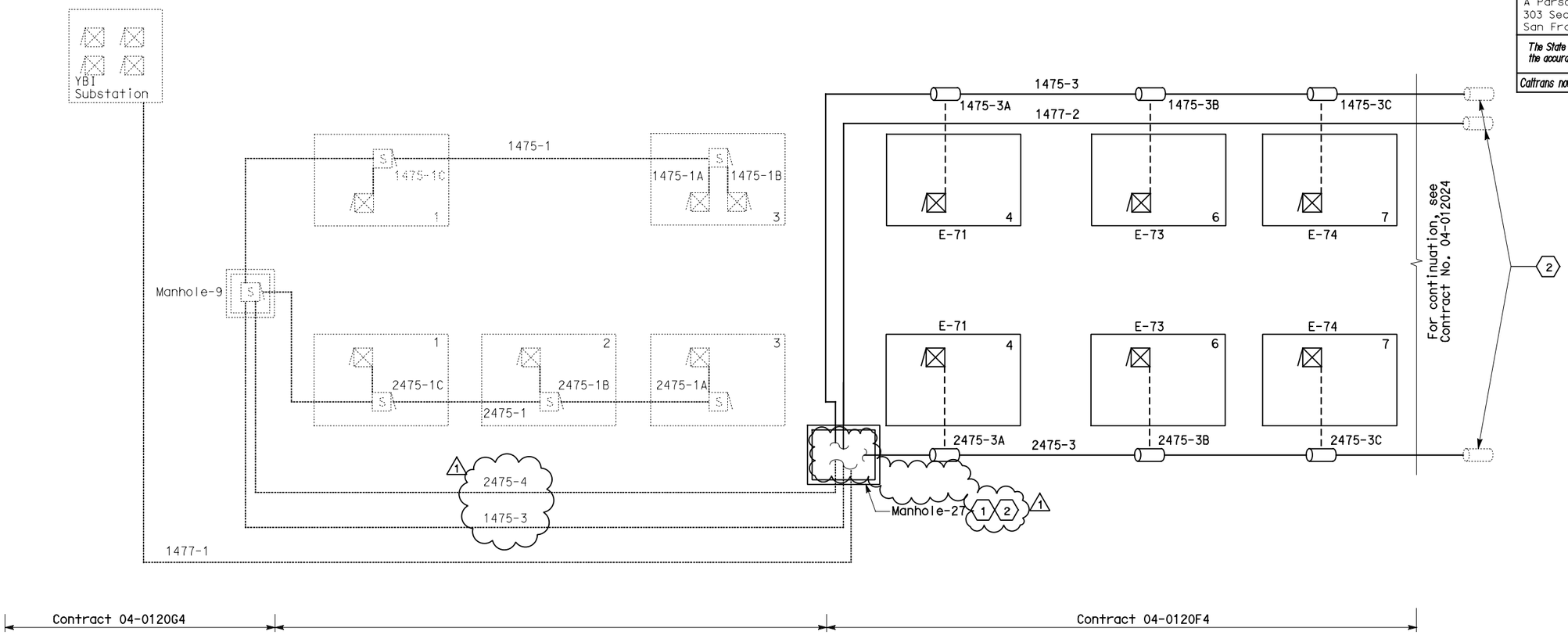

SHEET NOTES:

1. For splice details, see sheet E-355.
2. For splices at contract boundaries, refer to sheet E-357, Fiber Optic Interface Plan and Cable Block Diagram.

LEGEND:

- 72 Fiber Optic Cable
- 12 Fiber Optic Cable
- Fiber Splice Closure
- Fiber Splice Cabinet
- Controller Cabinet
- Manhole
- E-XXX Corresponding Platform Layout sheet
- Platform
- Platform ID

NOTES:

1. For Manhole 27 location, see sheet E-11.
2. For cable numbering scheme, see Project Notes.

THIS PLAN IS ACCURATE FOR ELECTRICAL WORK ONLY.

REGISTERED PROFESSIONAL ENGINEER M.P. Lee No. 13435 Exp. 9-30-12 ELECT STATE OF CALIFORNIA

FOR REVISION ONLY

REQUEST FOR INFORMATION NOT ADDRESSED IN THIS CCO REMAIN IN FORCE					
1	09/12/11	TOS MODIFICATIONS	RG RR	ML	81
MARK	DATE	DESCRIPTIONS	BY	CH'D	CCO#
REVISIONS					

CONTRACT CHANGE ORDER NO._____
SHEET_____ OF _____

DETAILS
TRAFFIC OPERATIONS SYSTEM COMMUNICATION CABLE BLOCK DIAGRAM
NO SCALE

E-353

DESIGN OVERSIGHT	BEHZAD GOLEMOHAMMADI	CALCULATED/DESIGNED BY	MD
		CHECKED BY	PBF
DATE REVISED	REVISED BY	DATE 11/01	12/01

STATE OF CALIFORNIA - DEPARTMENT OF TRANSPORTATION

FOR REDUCED PLANS ORIGINAL SCALE IS IN MILLIMETERS 0 20 40 60 80

DGN FILE =>04-0120f1_0325R01.dgn
USERNAME =>llorico

CU 04251 EA 0120F1

LAST REVISION 00-00-00 DATE PLOTTED => 12-SEP-2011 TIME PLOTTED => 11:22

DIST	COUNTY	ROUTE	KILOMETER POST TOTAL PROJECT	SHEET No	TOTAL SHEETS
04	SF	80	13.2/13.9	327R1	1204

REGISTERED CIVIL ENGINEER — DATE 12/19/02

12-6-04
PLANS APPROVAL DATE

REGISTERED PROFESSIONAL ENGINEER — Michael Dahlin — No. 47186 — Exp. 12/31/05 — CIVIL — STATE OF CALIFORNIA

PB Farradyne
A Parsons Brinckerhoff Company
303 Second St., Suite 700N
San Francisco, CA 94107-1317

The State of California or its officers or agents shall not be responsible for the accuracy or completeness of electronic copies of this plan sheet.

Caltrans now has a web site! To get to the web site, go to: http://www.dot.ca.gov

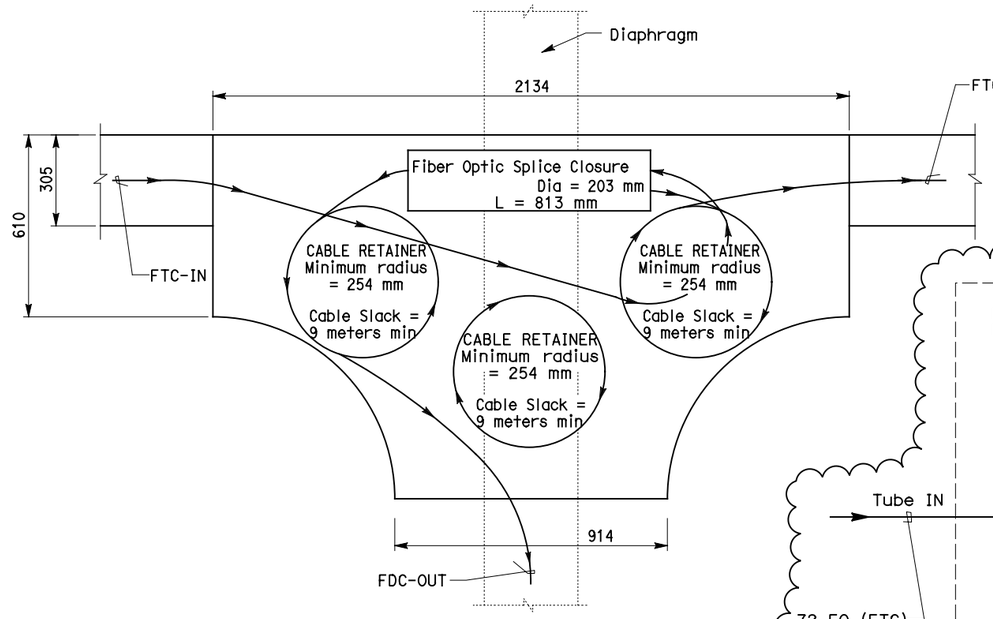

FIBER SPLICE TRAY DETAIL
NOT TO SCALE

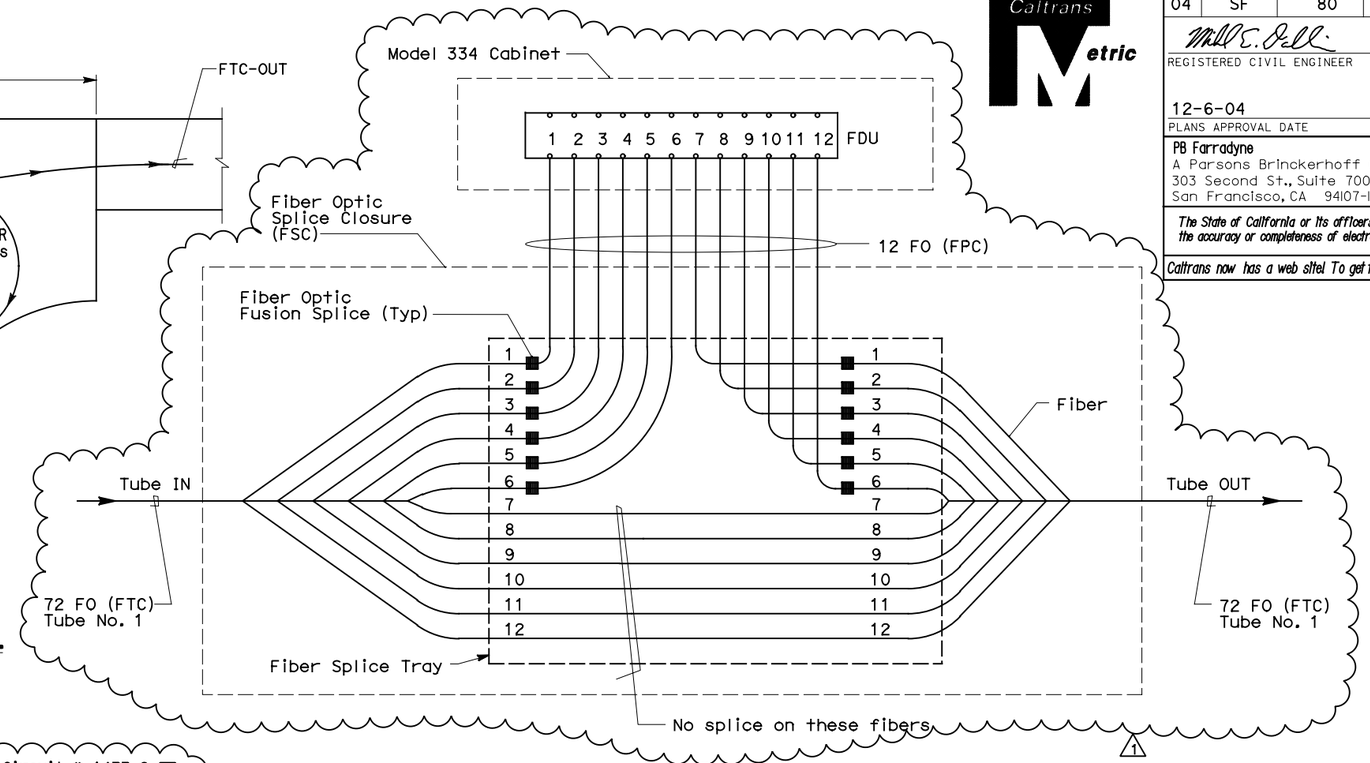

FIBER OPTIC SPLICE CLOSURE TYPICAL DETAIL
(SHOWN FOR TUBE No. 1)
NO SCALE

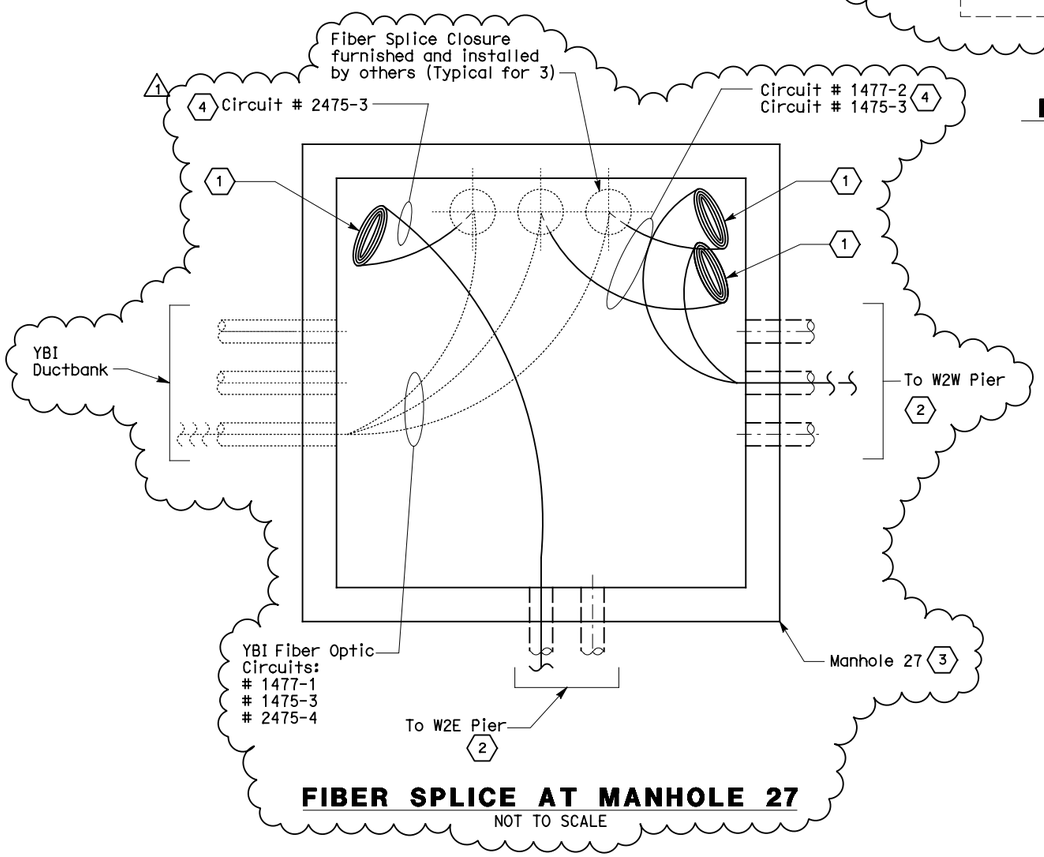

FIBER SPLICE AT MANHOLE 27
NOT TO SCALE

SHEET NOTES:

1. The Contractor shall not exceed minimum bending radius of 254 mm. Cable slack shall be a minimum of 18 meters.
2. For Conduit locations refer to underground plan on E-11 and Ductbank details on E-16
3. For location of Manhole 27, see underground plan, sheet E-11.
4. Refer to E-357 for overall TOS Fiber Optic Interface Plan and Cable Block Diagram.
5. Refer to E-357A & E-357B for Fiber Optic cable terminations.

NOTES:

1. The Contractor shall submit cable installation plan and any recommendation of the manufacturer to the Engineer for review and approval.

REGISTERED PROFESSIONAL ENGINEER — M.P. Lee — No. 13435 — Exp. 9-30-12 — ELECT — STATE OF CALIFORNIA

FOR REVISION ONLY

REQUEST FOR INFORMATION NOT ADDRESSED IN THIS CCO REMAIN IN FORCE

MARK	DATE	DESCRIPTIONS	BY	CH'D	CCO#
1	09/12/11	TOS MODIFICATIONS	RG RR	ML	81

REVISIONS

CONTRACT CHANGE ORDER NO._____
SHEET_____ OF _____

DETAILS
TRAFFIC OPERATIONS SYSTEM
FIBER OPTIC SPLICE
NO SCALE

E-355

CALCULATED/ DESIGNED BY	MD	DATE 11/01	REVISED BY	DATE REVISED
CHECKED BY	PBF	12/01		

DESIGN OVERSIGHT — BEHZAD GOLEMOHAMMADI

STATE OF CALIFORNIA - DEPARTMENT OF TRANSPORTATION — Caltrans

LAST REVISION 00-00-00 — DATE PLOTTED => 12-SEP-2011 — TIME PLOTTED => 11:22

ALL DIMENSIONS ARE IN MILLIMETERS UNLESS OTHERWISE SHOWN.

FOR REDUCED PLANS ORIGINAL SCALE IS IN MILLIMETERS 0 20 40 60 80

DGN FILE =>04-0120f1_0327R01.dgn
USERNAME =>llorico

CU 04251 — EA 0120F1

DIST	COUNTY	ROUTE	KILOMETER POST TOTAL PROJECT	SHEET No	TOTAL SHEETS
04	SF	80	13.2/13.9	328R1	1204

REGISTERED CIVIL ENGINEER — DATE 12/19/02

12-6-04
PLANS APPROVAL DATE

REGISTERED PROFESSIONAL ENGINEER — Michael Dahlin No. 47186 Exp. 12/31/05 CIVIL — STATE OF CALIFORNIA

PB Farradyne
A Parsons Brinckerhoff Company
303 Second St., Suite 700N
San Francisco, CA 94107-1317

The State of California or its officers or agents shall not be responsible for the accuracy or completeness of electronic copies of this plan sheet.

Caltrans now has a web site! To get to the web site, go to: http://www.dot.ca.gov

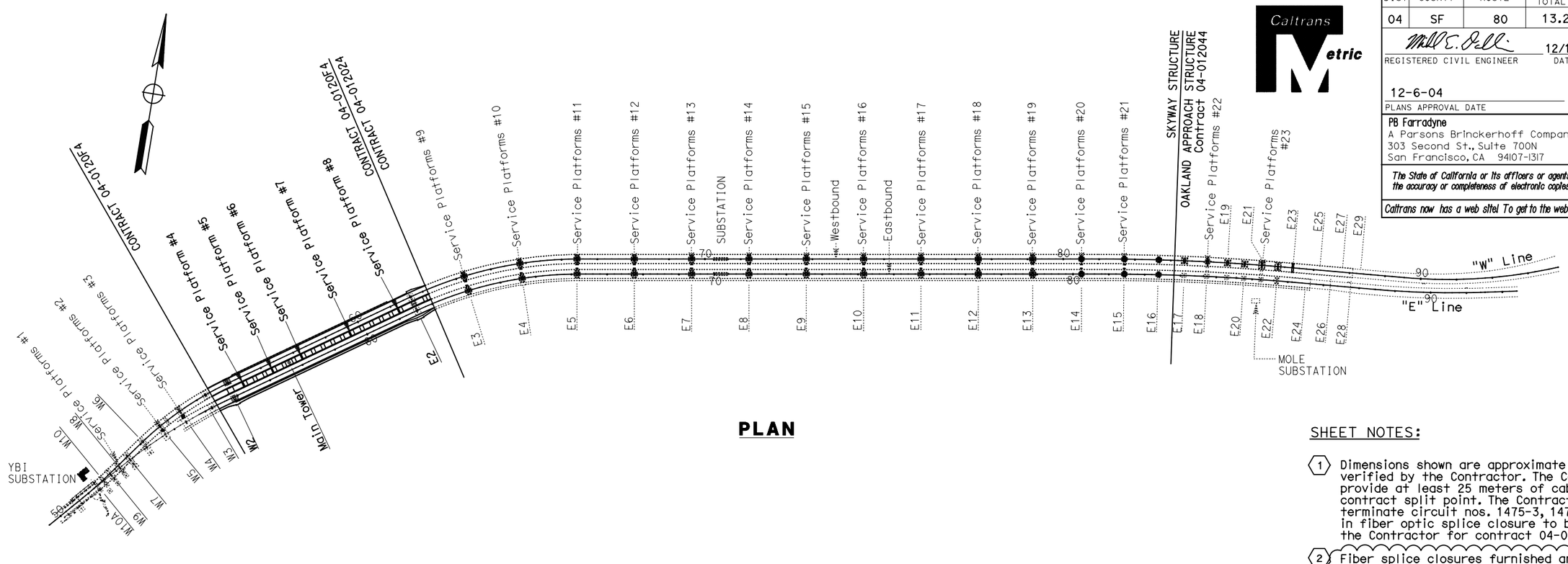

PLAN

SHEET NOTES:

1. Dimensions shown are approximate and shall be verified by the Contractor. The Contractor to provide at least 25 meters of cables beyond the contract split point. The Contractor shall terminate circuit nos. 1475-3, 1477-2 and 2475-3 in fiber optic splice closure to be provided by the Contractor for contract 04-012024.
2. Fiber splice closures furnished and installed under separate contract for circuit nos. 1475-3, 1477-2 and 2475-3.

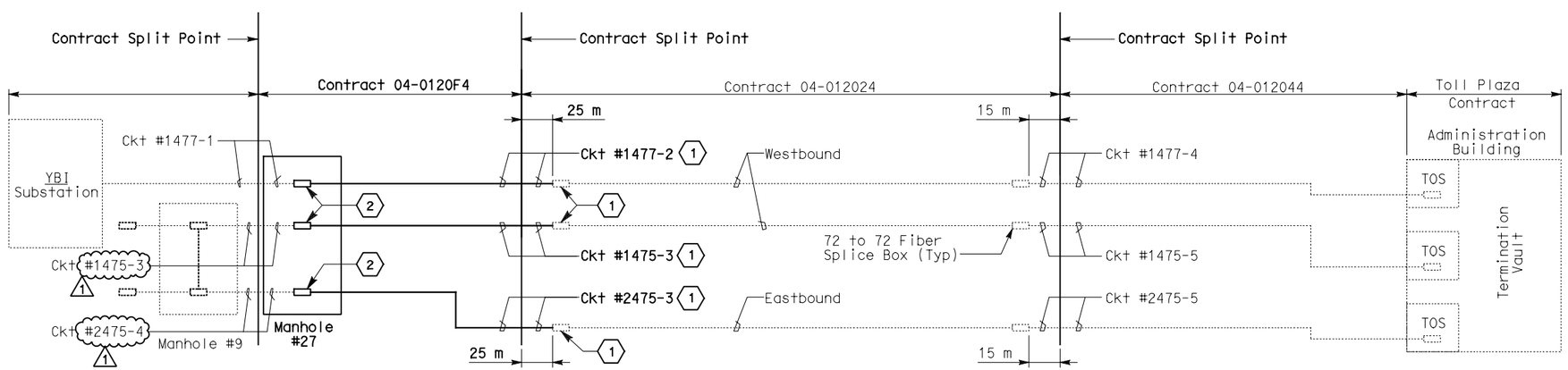

CABLE BLOCK DIAGRAM

REGISTERED PROFESSIONAL ENGINEER — M.P. Lee No. 13435 Exp. 9-30-12 ELECT — STATE OF CALIFORNIA

FOR REVISION ONLY

REQUEST FOR INFORMATION NOT ADDRESSED IN THIS CCO REMAIN IN FORCE					
1	09/12/11	TOS MODIFICATIONS	RG RR	ML	81
MARK	DATE	DESCRIPTIONS	BY	CH'D	CCO#
REVISIONS					

CONTRACT CHANGE ORDER NO._____
SHEET _____ OF _____

DETAILS
TRAFFIC OPERATIONS SYSTEM
FIBER OPTIC INTERFACE PLAN AND CABLE BLOCK DIAGRAM

NO SCALE

THIS PLAN ACCURATE FOR ELECTRICAL WORK ONLY.

E-357

CALCULATED/DESIGNED BY	MD	DATE 11/01	REVISED BY
CHECKED BY	PBF	12/01	DATE REVISED

DESIGN OVERSIGHT — BEHZAD GOLEMOHAMMADI

STATE OF CALIFORNIA - DEPARTMENT OF TRANSPORTATION — Caltrans

FOR REDUCED PLANS ORIGINAL SCALE IS IN MILLIMETERS — 0 20 40 60 80

DGN FILE =>04-0120f1_0328R01.dgn
USERNAME =>llorico

CU 04251 — EA 0120F1

LAST REVISION 00-00-00 — DATE PLOTTED => 12-SEP-2011 — TIME PLOTTED => 11:22

DIST	COUNTY	ROUTE	KILOMETER POST TOTAL PROJECT	SHEET No	TOTAL SHEETS
04	SF,Ala	80	12.2/14.3 0.0/4.0	328S1	1204

REGISTERED ELECTRICAL ENGINEER DATE

PLANS APPROVAL DATE

REGISTERED PROFESSIONAL ENGINEER M.P. Lee No. 13435 Exp. 9-30-10 ELECTRICAL STATE OF CALIFORNIA

The State of California or its officers or agents shall not be responsible for the accuracy or completeness of electronic copies of this plan sheet.

Caltrans now has a web site! To get to the web site, go to http://www.dot.ca.gov

Caltrans Metric

REQUEST FOR INFORMATION NOT ADDRESSED IN THIS CCO REMAIN IN FORCE					
0	07/01/11	TOS MODIFICATIONS	RG RR	ML	81
MARK	DATE	DESCRIPTIONS	BY	CH'D	CCO#
		REVISIONS			

CONTRACT CHANGE ORDER NO._____

SHEET _____ OF _____

		YBI-1				SAS			SKYWAY													OTD-1		OTD-2				
		YBI-SUB TOS-Y04 (FDU-W)	01WA 01W W 52.18	03WA 03W W 54.44	CCTV-W01 03WB 03W W 54.44	04WA 04W W 56.38	CCTV-E01B 06WA 06W W 58.18	07WA 07W W 59.62	09WA 09W W 63.23	10WA 10W W 64.83	11WA 11W W 66.43	11WB 11W W 66.43	CCTV-W03 12WA 12W W 68.03	13WA 13W W 69.63	15WA 15W W 72.83	16WA 16W W 74.43	17WA 17W W 76.03	CCTV-W02 18WA 18W W 77.63	20WA 20W W 80.51	21WA 21W W 81.71	22WA 22W W 84.04	23WA 23W W 85.55	CCTV-E10 26A 23W MS 86+70	24A 23W MN 88.25	CCTV-W03 25A 23W MN 90.50	SFOBB-HUB ADMIN BLDG TOS-A04 (FDU-W)	EQ ID cabinet ID FSC ID cabinet station
Tube 1	Fiber																											
	1	X			X X				X X				X X				X X				X X				X X	X	Circuit 1
	2	X			X X				X X				X X				X X				X X				X X	X	Circuit 1
	3	X			X X				X X				X X				X X				X X				X X	X	Circuit 2
	4	X			X X				X X				X X				X X				X X				X X	X	Circuit 2
	5	X			X X				X X				X X				X X				X X				X X	X	Circuit 3
	6	X			X X				X X				X X				X X				X X				X X	X	Circuit 3
	7	X																								X	SPARE
	8	X																								X	
	9	X																								X	
	10	X																								X	
	11	X																								X	
	12	X																								X	
Tube 2	13	X						X X				X X				X X				X X			X X			X	Circuit 4
	14	X						X X				X X				X X				X X			X X			X	Circuit 4
	15	X						X X				X X				X X				X X			X X			X	Circuit 5
	16	X						X X				X X				X X				X X			X X			X	Circuit 5
	17	X						X X				X X				X X				X X			X X			X	Circuit 6
	18	X						X X				X X				X X				X X			X X			X	Circuit 6
	19	X																								X	SPARE
	20	X																								X	
	21	X																								X	
	22	X																								X	
	23	X																								X	
	24	X																								X	
Tube 3	25	X		X X			X X				X X				X X				X X					X X		X	Circuit 7
	26	X		X X			X X				X X				X X				X X					X X		X	Circuit 7
	27	X		X X			X X				X X				X X				X X					X X		X	Circuit 8
	28	X		X X			X X				X X				X X				X X					X X		X	Circuit 8
	29	X		X X			X X				X X				X X				X X					X X		X	Circuit 9
	30	X		X X			X X				X X				X X				X X					X X		X	Circuit 9
	31	X																								X	SPARE
	32	X																								X	
	33	X																								X	
	34	X																								X	
	35	X																								X	
	36	X																								X	
Tube 4	37	X	X X			X X				X X				X X				X X				X X				X	Circuit 10
	38	X	X X			X X				X X				X X				X X				X X				X	Circuit 10
	39	X	X X			X X				X X				X X				X X				X X				X	Circuit 11
	40	X	X X			X X				X X				X X				X X				X X				X	Circuit 11
	41	X	X X			X X				X X				X X				X X				X X				X	Circuit 12
	42	X	X X			X X				X X				X X				X X				X X				X	Circuit 12
	43	X																								X	SPARE
	44	X																								X	
	45	X																								X	
	46	X																								X	
	47	X																								X	
	48	X																								X	
Tube 5	49~60	X																								X	SPARES
Tube 6	61~72	X																								X	SPARES

SHEET NOTES:

1. Terminate fibers at this location, represented with bold "X".
2. These terminations by others.

GENERAL NOTE:

1. For notes, abbreviations and legend, see sheets E-8 and E-970.

THIS PLAN ACCURATE FOR ELECTRICAL WORK ONLY.

FIBER OPTIC TERMINATIONS - WESTBOUND

DETAILS
TRAFFIC OPERATIONS SYSTEM
FTC-WESTBOUND
NO SCALE

E-357A

STATE OF CALIFORNIA - DEPARTMENT OF TRANSPORTATION

DESIGN OVERSIGHT MICHAEL P. LEE

CALCULATED/ DESIGNED BY	CHECKED BY	REVISED BY	DATE REVISED
ML	FW	DATE 09/09	12/09

LAST REVISION 00-00-00 DATE PLOTTED => 05-JUL-2011 TIME PLOTTED => 14:56

DIST	COUNTY	ROUTE	KILOMETER POST TOTAL PROJECT	SHEET No	TOTAL SHEETS
04	SF,Ala	80	12.2/14.3 0.0/4.0	328S2	1204

REGISTERED ELECTRICAL ENGINEER DATE

PLANS APPROVAL DATE

REGISTERED PROFESSIONAL ENGINEER M.P. Lee No. 13435 Exp. 9-30-10 ELECTRICAL STATE OF CALIFORNIA

The State of California or its officers or agents shall not be responsible for the accuracy or completeness of electronic copies of this plan sheet.

Caltrans now has a web site! To get to the web site, go to http://www.dot.ca.gov

Caltrans Metric

MARK	DATE	DESCRIPTIONS	BY	CH'D	CCO#
0	07/12/11	TOS MODIFICATIONS	RG RR	ML	81

REVISIONS

REQUEST FOR INFORMATION NOT ADDRESSED IN THIS CCO REMAIN IN FORCE

CONTRACT CHANGE ORDER NO._____
SHEET_____ OF _____

	Fiber	YBI-SUB TOS-Y04 (FDU-E)	01EA 1E E 52.16	RM01 1E R1 51.80	02EA 2E E 53.70	03EA 3E E 54.38	04EA 4E E 56.29	CCTV-E01 06EA 6E E 58.10	07EA 7E E 59.54	09EA 9E E 63.08	10EA 10E E 64.62	11EA 11E E 66.15	12EA 12E E 67.75	13EA 13E E 69.36	CCTV-E02 13EB 13E E 69.36	15EA 15E E 72.55	16EA 16E E 74.16	17EA 17E E 75.75	18EA 18E E 77.36	CCTV-XXX 20EA 20E E 80.24	21EA 21E E 81.43	CCTV-E03 22EA 22E E 83.75	23EA 23E E 85.24	SFOBB-HUB ADMIN BLDG TOS-A04 (FDU-E)	EQ ID cabinet ID FSC ID cabinet station
			YBI-1 (2)				SAS			SKYWAY											OTD-1		OTD-2		
Tube 1	1	X	X X				X X				X X				X X				X X				X X	X	Circuit 1
	2	X	X X				X X				X X				X X				X X				X X	X	Circuit 1
	3	X	X X				X X	(1)			X X				X X				X X				X X	X	Circuit 2
	4	X	X X				X X				X X				X X				X X				X X	X	Circuit 2
	5	X	X X				X X				X X				X X				X X				X X	X	Circuit 3
	6	X	X X				X X				X X				X X				X X				X X	X	Circuit 3
	7	X																						X	SPARE
	8	X																						X	
	9	X																						X	
	10	X																						X	
	11	X																						X	
	12	X																						X	
Tube 2	13	X		X X				X X				X X				X X				X X				X	Circuit 4
	14	X		X X				X X				X X				X X				X X				X	Circuit 4
	15	X		X X				X X	(1)			X X				X X				X X				X	Circuit 5
	16	X		X X				X X				X X				X X				X X				X	Circuit 5
	17	X		X X				X X				X X				X X				X X				X	Circuit 6
	18	X		X X				X X				X X				X X				X X				X	Circuit 6
	19	X																						X	SPARE
	20	X																						X	
	21	X																						X	
	22	X																						X	
	23	X																						X	
	24	X																						X	
Tube 3	25	X			X X				X X				X X				X X				X X			X	Circuit 7
	26	X			X X				X X				X X				X X				X X			X	Circuit 7
	27	X			X X				X X	(1)			X X				X X				X X			X	Circuit 8
	28	X			X X				X X				X X				X X				X X			X	Circuit 8
	29	X			X X				X X				X X				X X				X X			X	Circuit 9
	30	X			X X				X X				X X				X X				X X			X	Circuit 9
	31	X																						X	SPARE
	32	X																						X	
	33	X																						X	
	34	X																						X	
	35	X																						X	
	36	X																						X	
Tube 4	37	X				X X				X X				X X			X X					X X		X	Circuit 10
	38	X				X X				X X				X X			X X					X X		X	Circuit 10
	39	X				X X				X X				X X			X X					X X		X	Circuit 11
	40	X				X X				X X				X X			X X					X X		X	Circuit 11
	41	X				X X				X X				X X			X X					X X		X	Circuit 12
	42	X				X X				X X				X X			X X					X X		X	Circuit 12
	43	X																						X	SPARE
	44	X																						X	
	45	X																						X	
	46	X																						X	
	47	X																						X	
	48	X																						X	
Tube 5	49~60	X																						X	SPARES
Tube 6	61~72	X																						X	SPARES

SHEET NOTES:

(1) Terminate fibers at this location, represented with bold "X".

(2) These terminations by others.

GENERAL NOTE:

1. For notes, abbreviations and legend, see sheets E-8 and E-970.

FIBER OPTIC TERMINATIONS - EASTBOUND

DETAILS
TRAFFIC OPERATIONS SYSTEMS
FTC-EASTBOUND

NO SCALE

THIS PLAN ACCURATE FOR ELECTRICAL WORK ONLY.

STATE OF CALIFORNIA - DEPARTMENT OF TRANSPORTATION

Caltrans

DESIGN OVERSIGHT MICHAEL P. LEE

CALCULATED/ DESIGNED BY	CHECKED BY	REVISED BY	DATE REVISED
ML	FW	DATE 09/09	12/09

LAST REVISION 00-00-00 DATE PLOTTED => 12-JUL-2011 TIME PLOTTED => 09:37

E-357B

DIST	COUNTY	ROUTE	KILOMETER POST TOTAL PROJECT	SHEET No	TOTAL SHEETS
04	SF	80	13.2/13.9	362 R6	1204

REGISTERED ELECTRICAL ENGINEER 12/19/02 DATE

12-6-04
PLANS APPROVAL DATE

REGISTERED PROFESSIONAL ENGINEER JENS ERLINGSSON No. 8249 Exp. 9/30/06 ELECTRICAL STATE OF CALIFORNIA

PB POWER, Inc.
A Parsons Brinckerhoff Company
303 Second St., Suite 700N
San Francisco, CA 94107-1317

The State of California or its officers or agents shall not be responsible for the accuracy or completeness of electronic copies of this plan sheet.

Caltrans now has a web site! To get to the web site, go to http://www.dot.ca.gov

Caltrans Metric

REQUEST FOR INFORMATION NOT ADDRESSED IN THIS CCO REMAIN IN FORCE

MARK	DATE	DESCRIPTIONS	BY	CH'D	CCO#
6	07/01/11	TOS MODIFICATIONS	RR	RG	81
5	01/07/11	ELECTRICAL WARNING SYSTEMS	TW	RG	61
4	03/26/10	DEHUMIDIFIER SCADA INTERFACE	RR	RG FW	130
3	03/30/09	SERVICE PLATFORM ELECTRICAL CHANGES	RY RR	RG MP	55
2	02/25/08	CABLE TRAY CHANGES	RR TW	RG	42S1
1	03/04/08	BARRIER MODIFICATIONS	JS BM	RG	44

REVISIONS

CONTRACT CHANGE ORDER NO._____
SHEET_____ OF_____

REGISTERED PROFESSIONAL ENGINEER S. A. ESTOQUE, JR. No. E-10151 Exp. 12/31/2008 ELECTRICAL STATE OF CALIFORNIA
FOR REVISION ONLY 1 2

REGISTERED PROFESSIONAL ENGINEER FADI WALIEDDINE No. 11465 Exp. 12/31/2009 ELECTRICAL STATE OF CALIFORNIA
FOR REVISION ONLY 3

REGISTERED PROFESSIONAL ENGINEER SYN YEE CHIN No. 18186 Exp. 09/30/2011 ELECTRICAL STATE OF CALIFORNIA
Syn Yee Chin
FOR REVISION ONLY 4 5 6

CONDUIT DATA

Conduit No.	Reference	Size	Type	Total Fill (mm2)	Allowable Fill (mm2)	Included Cable No.	Conductor Type
						A-3009-1	1-3/C + gnd #2, 600 V, EPR insulation
						S-3021-1	1-3/C + gnd #4, 600 V, EPR insulation
						S-3023-1	1-3/C + gnd #4, 600 V, EPR insulation
						S-3056-1	1-3/C + gnd #6, 600 V, EPR insulation
						S-1031-3	1-3/C + gnd #4, 600 V, EPR insulation
						S-1032-1	1-3/C + gnd #4, 600 V, EPR insulation
						A-1035-1	1-3/C + gnd #6, 600 V, EPR insulation
						1202-3	1-7/C #16, 600 V, EPR insulation
						1099	1-3/C + gnd #2, 600 V, EPR insulation
						1098	1-3/C + gnd #2, 600 V, EPR insulation
						1097	1-3/C + gnd #2, 600 V, EPR insulation
						1096	1-3/C + gnd #2, 600 V, EPR insulation
						1095	1-3/C + gnd #2, 600 V, EPR insulation
						1117	1-3/C + gnd #2/0, 600 V, EPR insulation
						1256-1	1-3/C #16, 600 V, EPR insulation
						1202-1	1-2/C + gnd #10 ,600 V, EPR insulation
						1255-2	1-3/C #16, 600 V, EPR insulation
						A-3008-1	1-2/C + gnd #8, 600 V, EPR insulation
						1202-2	1-3/C #14, 600 V, EPR insulation
						A-3011-1	1-3/C + gnd #2, 600 V, EPR insulation
1T24	E-114	610	152.4 mm siderail ladder tray	1652.27	18064.48	UP104-7	1-2/C + gnd #8, 600 V, EPR insulation
						1095	1-3/C + gnd #2, 600 V, EPR insulation
						Pull rope	Soft-Fiber Polyester
						UP104-9	1-2/C + gnd #10, 600 V, EPR insulation
						UP104-8	1-2/C + gnd #8, 600 V, EPR insulation
						1255-1	1-3/C #16, 600 V, EPR insulation
						UP104-3	1-2/C + gnd #10, 600 V, EPR insulation
						UP204-1	1-2/C + gnd #10, 600 V, EPR insulation
						UP104-6	1-2/C + gnd #8 ,600 V, EPR insulation
1T25	E-114B	610	152.4 mm siderail ladder tray	2798.19	18064.48	UP105-10	1-2/C + gnd #8, 600 V, EPR insulation
						1201-1	1-2/C + gnd #10, 600 V, EPR insulation
						1201-2	1-2/C + gnd #10, 600 V, EPR insulation
						1201-6	1-2/C + gnd #10, 600 V, EPR insulation
						1096	1-3/C + gnd #2, 600 V, EPR insulation
						1255-1	1-3/C #16, 600 V, EPR insulation
						1202-4	1-3/C #14, 600 V, EPR insulation
						UP105-8	1-2/C + gnd #8, 600 V, EPR insulation
						UP205-1	1-2/C + gnd #10, 600 V, EPR insulation
						1202-3	1-7/C #16, 600 V, EPR insulation
						1202-2	1-3/C #14, 600 V, EPR insulation
						Pull rope	Soft-Fiber Polyester
						UP105-3	1-2/C + gnd #10, 600 V, EPR insulation
						UP105-9	1-2/C + gnd #8, 600 V, EPR insulation
						UP105-7	1-2/C + gnd #8, 600 V, EPR insulation
						S-3056-5	1-4/C #14, 600 V, EPR insulation
						S-3056-7	1-2/C #14, 600 V, EPR insulation
1T26	E-116	610	152.4 mm siderail ladder tray	2557.83 6	18064.48	UP106-1	1-2/C + gnd #8, 600 V, EPR insulation
						UP106-8	1-2/C + gnd #8, 600 V, EPR insulation
						UP106-3	1-2/C + gnd #8, 600 V, EPR insulation
						1255-2	1-3/C #16, 600 V, EPR insulation
						UP206-1	1-2/C + gnd #10, 600 V, EPR insulation
						Pull rope	Soft-Fiber Polyester
						1202-2	1-3/C #14, 600 V, EPR insulation
						1202-3	1-7/C #16, 600 V, EPR insulation
						UP106-6	1-2/C + gnd #8, 600 V, EPR insulation
						UP106-7	1-2/C + gnd #8, 600 V, EPR insulation
						6	
						UP106-9	1-2/C + gnd #8, 600 V, EPR insulation
						1097	1-3/C + gnd #2, 600 V, EPR insulation
						1202-4	1-3/C #14, 600 V, EPR insulation
						1202-1	1-2/C + gnd #10, 600 V, EPR insulation
						1202-3A	1-2/C #14, 600 V, EPR insulation
1T27	E-117	610	152.4 mm siderail ladder tray	1726.55	18064.48	UP107-6	1-2/C + gnd #8, 600 V, EPR insulation
						Pull rope	Soft-Fiber Polyester
						UP107-7	1-2/C + gnd #8, 600 V, EPR insulation
						UP107-9	1-2/C + gnd #8, 600 V, EPR insulation
						1256-1	1-3/C #16 ,600V, EPR insulation
						UP107-8	1-2/C + gnd #8, 600 V, EPR insulation
						1098	1-3/C + gnd #2, 600 V, EPR insulation
						UP107-3	1-2/C + gnd #8, 600 V, EPR insulation

CONDUIT DATA

Conduit No.	Reference	Size	Type	Total Fill (mm2)	Allowable Fill (mm2)	Included Cable No.	Conductor Type
1T28	E-118	610	152.4 mm siderail ladder tray	2851.38	18064.48	UP108-8	1-2/C + gnd #8, 600 V, EPR insulation
						UP108-3	1-2/C + gnd #8, 600 V, EPR insulation
						UP108-10	1-2/C + gnd #8, 600 V, EPR insulation
						S-3056-8	1-4/C #14, 600 V, EPR insulation
						2201-4A	1-2/C #14, 600 V, EPR insulation
						Pull rope	Soft-Fiber Polyester
						UP108-7	1-2/C + gnd #8, 600 V, EPR insulation
						2201-5	1-3/C #14, 600 V, EPR insulation
						2201-1	1-2/C + gnd #10, 600 V, EPR insulation
						UP108-9	1-2/C + gnd #8, 600 V, EPR insulation
						UP108-12	1-2/C + gnd #8, 600 V, EPR insulation
						1099	1-3/C + gnd #2, 600 V, EPR insulation
						1256-1	1-3/C #16, 600 V, EPR insulation
1T29	E-20B, E-126	610	152.4 mm siderail ladder tray	12114.34	18064.48	1106	1-3/C + gnd #6, 600 V, EPR insulation
						S-1032-1	1-3/C + gnd #4, 600 V, EPR insulation
						A-3002-1	1-3/C + gnd #4, 600 V, EPR insulation
						A-3001-1	1-3/C + gnd #4, 600 V, EPR insulation
						A-3013-1	1-3/C + gnd #2, 600 V, EPR insulation
						A-3012-1	1-3/C + gnd #2, 600 V, EPR insulation
						S-3023-1	1-3/C + gnd #4, 600 V, EPR insulation
						1097	1-3/C + gnd #2, 600 V, EPR insulation
						S-3051-1	1-3/C + gnd #4, 600 V, EPR insulation
						A-1035-1	1-3/C + gnd #6, 600 V, EPR insulation
						A-3011-1	1-3/C + gnd #2, 600 V, EPR insulation
						S-3021-1	1-3/C + gnd #4, 600 V, EPR insulation
						S-3022-1	1-3/C + gnd #2, 600 V, EPR insulation
						S-3056-1	1-3/C + gnd #6, 600 V, EPR insulation
						1098	1-3/C + gnd #2, 600 V, EPR insulation
						1096	1-3/C + gnd #2, 600 V, EPR insulation
						1095	1-3/C + gnd #2, 600 V, EPR insulation
						S-1031-1	1-3/C + gnd #2, 600 V, EPR insulation
						Pull rope	Soft-Fiber Polyester
						1099	1-3/C + gnd #2, 600 V, EPR insulation
						A-3008-1	1-2/C + gnd #8, 600 V, EPR insulation
						1117	1-3/C + gnd #2/0, 600 V, EPR insulation
						A-3010-1	1-3/C + gnd #2, 600 V, EPR insulation
						1115	1-3/C + gnd #1/0, 600 V, EPR insulation
						A-3009-1	1-3/C + gnd #2, 600 V, EPR insulation

For continuation, see next sheet.

CONDUIT AND TRAY SCHEDULE

E-407

REVISED BY	DATE REVISED
PBP	8/02

CALCULATED/ DESIGNED BY	CHECKED BY
	AB

DESIGN OVERSIGHT
BEHZAD GOLEMOHAMMADI

STATE OF CALIFORNIA - DEPARTMENT OF TRANSPORTATION
Caltrans

FOR REDUCED PLANS ORIGINAL SCALE IS IN MILLIMETERS 0 20 40 60 80

DGN FILE =>04-0120f1_0362R06.dgn
USERNAME =>llorico

CU 04251 EA 0120F1

LAST REVISION 00-00-00
DATE PLOTTED => 05-JUL-2011
TIME PLOTTED => 14:56

DIST	COUNTY	ROUTE	KILOMETER POST TOTAL PROJECT	SHEET No	TOTAL SHEETS
04	SF	80	13.2/13.9	363 R6	1204

REGISTERED ELECTRICAL ENGINEER 12/19/02 DATE

12-6-04
PLANS APPROVAL DATE

REGISTERED PROFESSIONAL ENGINEER JENS ERLINGSSON No. 8249 Exp. 9/30/06 ELECTRICAL STATE OF CALIFORNIA

PB POWER, Inc.
A Parsons Brinckerhoff Company
303 Second St., Suite 700N
San Francisco, CA 94107-1317

The State of California or its officers or agents shall not be responsible for the accuracy or completeness of electronic copies of this plan sheet.

Caltrans now has a web site! To get to the web site, go to http://www.dot.ca.gov

Caltrans Metric

REQUEST FOR INFORMATION NOT ADDRESSED IN THIS CCO REMAIN IN FORCE

MARK	DATE	DESCRIPTIONS	BY	CH'D	CCO#
6	07/01/11	TOS MODIFICATIONS	RR	RG	81
5	03/01/11	BASE INTEGRATION	RSB	WB	150
4	03/26/10	DEHUMIDIFIER SCADA INTERFACE	RR	RG FW	130
3	03/30/09	SERVICE PLATFORM ELECTRICAL CHANGES	RY RR	RG MP	55
2	02/25/08	CABLE TRAY CHANGES	RR TW	RG	42S1
1	03/04/08	BARRIER MODIFICATIONS	JS BM	RG	44

REVISIONS

CONTRACT CHANGE ORDER NO._____
SHEET____ OF____

REGISTERED PROFESSIONAL ENGINEER S. A. ESTOQUE, JR. No. E-10151 Exp. 12/31/2008 ELECTRICAL STATE OF CALIFORNIA 1 2
FOR REVISION ONLY

REGISTERED PROFESSIONAL ENGINEER FADI WALIEDDINE No. 11465 Exp. 12/31/2009 ELECTRICAL STATE OF CALIFORNIA 3
FOR REVISION ONLY

REGISTERED PROFESSIONAL ENGINEER SYN YEE CHIN No. 18186 Exp. 09/30/2011 ELECTRICAL STATE OF CALIFORNIA 4 5 6
FOR REVISION ONLY

CONDUIT DATA

Conduit No	Reference	Size	Type	Total Fill (mm²)	Allowable Fill (mm²)	Included Cable No.	Conductor Type
1T33	E-114B	610	152.4 mm siderail ladder tray	7720.94	18064.48	UP104-8	1-2/C + gnd #8, 600 V, EPR insulation
						UP108-12	1-2/C + gnd #8, 600 V, EPR insulation
						UP108-9	1-2/C + gnd #8, 600 V, EPR insulation
						A-1011-1	1-3/C + gnd #2, 600 V, EPR insulation
						A-1012-1	1-3/C + gnd #2, 600 V, EPR insulation
						UP104-3	1-2/C + gnd #10, 600 V, EPR insulation
						UP107-3	1-2/C + gnd #8, 600 V, EPR insulation
						UP105-9	1-2/C + gnd #8, 600 V, EPR insulation
						UP104-9	1-2/C + gnd #10, 600 V, EPR insulation
						Pull rope	Soft-Fiber Polyester
						UP108-4	1-2/C + gnd #8, 600 V, EPR insulation
						UP108-2	1-2/C + gnd #8, 600 V, EPR insulation
						UP108-7	1-2/C + gnd #8, 600 V, EPR insulation
						UP107-7	1-2/C + gnd #8, 600 V, EPR insulation
						UP106-7	1-2/C + gnd #8, 600 V, EPR insulation
						UP105-7	1-2/C + gnd #8, 600 V, EPR insulation
						A-1013-1	1-3/C + gnd #2, 600 V, EPR insulation
						UP107-9	1-2/C + gnd #8, 600 V, EPR insulation
						A-1014-1	1-3/C + gnd #2, 600 V, EPR insulation
						UP106-3	1-2/C + gnd #8, 600 V, EPR insulation
						UP105-3	1-2/C + gnd #10, 600 V, EPR insulation
						UP106-6	1-2/C + gnd #8, 600 V, EPR insulation
						UP105-10	1-2/C + gnd #8, 600 V, EPR insulation
						UP104-6	1-2/C + gnd #8, 600 V, EPR insulation
						UP107-8	1-2/C + gnd #8, 600 V, EPR insulation
						UP106-8	1-2/C + gnd #8, 600 V, EPR insulation
						UP105-8	1-2/C + gnd #8, 600 V, EPR insulation
						UP104-7	1-2/C + gnd #8, 600 V, EPR insulation
						UP108-8	1-2/C + gnd #8, 600 V, EPR insulation
						UP106-9	1-2/C + gnd #8, 600 V, EPR insulation
						UP108-10	1-2/C + gnd #8, 600 V, EPR insulation
1T39	E-20B, E-126	610	152.4 mm siderail ladder tray	1054.36	18064.48	A-1011-1	1-3/C + gnd #2, 600 V, EPR insulation
						A-1014-1	1-3/C + gnd #2, 600 V, EPR insulation
						Pull rope	Soft-Fiber Polyester
1T43	E-114B	610	152.4 mm siderail solid bottom tray	13605.16	38709.60	MVDSW04A	MVDS DLC
						1144	1 - 2 pair, shielded #18 with IS/OA , 300 V, PVC jacket
						1475-3C	12 Fiber, single mode fiberoptic cable
						1475-3A	12 Fiber, single mode fiberoptic cable
						1474-4	50 pair #18, shielded pairs, IS/OS shield 600 V, XLPE insul., PVC jacket
						1145	1 - 2 pair, shielded #18 with IS/OA , 300 V, PVC jacket
						1474-5	50 pair #18, shielded pairs, IS/OS shield 600 V, XLPE insul., PVC jacket
						1474-7	50 pair #18, shielded pairs, IS/OS shield 600 V, XLPE insul., PVC jacket
						1477-2	72 Fiber, single mode fiberoptic riser cable
						1475-3	72 Fiber, single mode fiberoptic riser cable
						MVDSW02A	MVDS DLC
						1115-1	1-2PR #18 Twisted Shielded w/overall shield
						1117-1	1-2PR #18 Twisted Shielded w/overall shield
						1475-3B	12 Fiber, single mode fiberoptic cable
						2900-472B	4 pair #22, shielded pairs, FEP insulation
						2900-182A	4 pair #22, shielded pairs, FEP insulation
						2900-182B	4 pair #22, shielded pairs, FEP insulation
						2900-202A	4 pair #22, shielded pairs, FEP insulation
						2900-282A	4 pair #22, shielded pairs, FEP insulation
						2900-342A	4 pair #22, shielded pairs, FEP insulation
						2900-392A	4 pair #22, shielded pairs, FEP insulation
						2900-462A	4 pair #22, shielded pairs, FEP insulation
						2900-472A	4 pair #22, shielded pairs, FEP insulation
						Pull rope	Soft-Fiber Polyester
						2900-472C	4 pair #22, shielded pairs, FEP insulation
						1474-8	50 pair #18, shielded pairs, IS/OS shield 600 V, XLPE insul., PVC jacket
						1473-5	50 pair #18, shielded pairs, IS/OS shield 600 V, XLPE insul., PVC jacket
						1473-7	50 pair #18, shielded pairs, IS/OS shield 600 V, XLPE insul., PVC jacket
						1473-10	50 pair #18, shielded pairs, IS/OS shield 600V, XLPE insul., PVC jacket
						1474-10	50 pair #18, shielded pairs, IS/OS shield 600 V, XLPE insul., PVC jacket
						2900-462B	4 pair #22, shielded pairs, FEP insulation
						1479-1	72 Fiber, single mode fiber optic riser cable inside brown innerduct
						1479-2	72 Fiber, single mode fiber optic riser cable inside brown innerduct
						1481-2	12 Fiber, single mode fiber optic cable inside brown innerduct

CONDUIT DATA

Conduit No	Reference	Size	Type	Total Fill (mm²)	Allowable Fill (mm²)	Included Cable No.	Conductor Type
1T44	E-114A	610	152.4 mm siderail solid bottom tray	3785.76	38709.60	1473-5	50 pair #18, shielded pairs, IS/OS shield 600 V, XLPE insul., PVC jacket
						1474-5	50 pair #18, shielded pairs, IS/OS shield 600 V, XLPE insul., PVC jacket
						1475-3A	12 Fiber, single mode fiberoptic cable
						MVDSW02A	MVDS DLC
						Pull rope	Soft-Fiber Polyester
						1474-4	50 pair #18, shielded pairs, IS/OS shield 600 V, XLPE insul., PVC jacket
1T45	E-114B	610	152.4 mm siderail solid bottom tray	2972.95	38709.60	Pull rope	Soft-Fiber Polyester
						2900-182A	4 pair #22, shielded pairs, FEP insulation
						2910-10	4 pair #22, shielded pairs, 300 V, PE insulation
						2910-8	4 pair #22, shielded pairs, 300 V, PE insulation
						1473-5	50 pair #18, shielded pairs, IS/OS shield 600 V, XLPE insul., PVC jacket
						1474-5	50 pair #18, shielded pairs, IS/OS shield 600 V, XLPE insul., PVC jacket
						1474-5B	1 - 6 pair, shielded #18 with overall shield , 300 V, PVC jacket
						1474-5A	1 - 6 pair, shielded #18 with overall shield , 300 V, PVC jacket
						2900-472C	4 pair #22, shielded pairs, FEP insulation
						2900-182B	4 pair #22, shielded pairs, FEP insulation
						2900-472A	4 pair #22, shielded pairs, FEP insulation
						2900-462B	4 pair #22, shielded pairs, FEP insulation
						2900-462A	4 pair #22, shielded pairs, FEP insulation
						2900-392A	4 pair #22, shielded pairs, FEP insulation
						2900-342A	4 pair #22, shielded pairs, FEP insulation
						2900-282A	4 pair #22, shielded pairs, FEP insulation
						2910-7	4 pair #24, overall shielded, 30 V, PE insulation
						2900-472B	4 pair #22, shielded pairs, FEP insulation
						2900-202A	4 pair #22, shielded pairs, FEP insulation
						1115-1	1-2PR #18 Twisted Shielded w/overall shield
1T46	E-98, E-114	610	152.4 mm siderail solid bottom tray	5211.36 6	38709.60	CCTVE01B	HCC 6
						1474-7	50 pair #18, shielded pairs, IS/OS shield 600 V, XLPE insul., PVC jacket
						MVDSW03A	MVDS DLC
						6	
						1475-3B	12 Fiber, single mode fiberoptic cable
						Pull rope	Soft-Fiber Polyester
						1473-7	50 pair #18, shielded pairs, IS/OS shield 600 V, XLPE insul., PVC jacket
						1479-1	72 Fiber, single mode fiber optic riser cable inside brown innerduct
						1479-2	72 Fiber, single mode fiber optic riser cable inside brown innerduct
						1481-2	12 Fiber, single mode fiber optic cable inside brown innerduct

For continuation, see next sheet.

CONDUIT AND TRAY SCHEDULE

E-408

CALCULATED/ DESIGNED BY	PBP	DATE 8/02	REVISED BY
CHECKED BY	AB	8/02	DATE REVISED

DESIGN OVERSIGHT
BEHZAD GOLEMOHAMMADI

STATE OF CALIFORNIA - DEPARTMENT OF TRANSPORTATION
Caltrans

DRAFT 1 (03/01/11)

LAST REVISION 00-00-00
DATE PLOTTED => 05-JUL-2011
TIME PLOTTED => 14:56

DIST	COUNTY	ROUTE	KILOMETER POST TOTAL PROJECT	SHEET No	TOTAL SHEETS
04	SF	80	13.2/13.9	373 R8	1204

REGISTERED ELECTRICAL ENGINEER 12/19/02 DATE

12-6-04
PLANS APPROVAL DATE

PB POWER, Inc.
A Parsons Brinckerhoff Company
303 Second St., Suite 700N
San Francisco, CA 94107-1317

REGISTERED PROFESSIONAL ENGINEER JENS ERLINGSSON No. 8249 Exp. 9/30/06 ELECTRICAL STATE OF CALIFORNIA

The State of California or its officers or agents shall not be responsible for the accuracy or completeness of electronic copies of this plan sheet.

Caltrans now has a web site! To get to the web site, go to: http://www.dot.ca.gov

Caltrans Metric

REQUEST FOR INFORMATION NOT ADDRESSED IN THIS CCO REMAIN IN FORCE

MARK	DATE	DESCRIPTIONS	BY	CH'D	CCO#
8	07/01/11	TOS MODIFICATIONS	RR	RG	81
7	03/24/11	BIKE PATH CONDUIT	TW	RG	73
6	01/07/11	ELECTRICAL WARNING SYSTEMS	TW	RG	61
5	06/11/10	BIKE PATH CONDUIT	TW	RG	73
4	03/26/10	DEHUMIDIFIER SCADA INTERFACE	RR	RG FW	130
3	03/30/09	SERVICE PLATFORM ELECTRICAL CHANGES	RY RR	RG MP	55
2	02/25/08	CABLE TRAY CHANGES	RR TW	RG	42S1
1	03/04/08	BARRIER MODIFICATIONS	JS BM	RG	44

REVISIONS

SHEET OF
CONTRACT CHANGE ORDER NO.

REVISIONS SUPERCEDED

REGISTERED PROFESSIONAL ENGINEER SYN YEE CHIN No. 18186 Exp. 09/30/2011 ELECTRICAL STATE OF CALIFORNIA
FOR REVISION ONLY 4 5 6 7 8

REGISTERED PROFESSIONAL ENGINEER FADI WALIEDDINE No. 11465 Exp. 12/31/2009 ELECTRICAL STATE OF CALIFORNIA 3
FOR REVISION ONLY

REGISTERED PROFESSIONAL ENGINEER S. A. ESTOQUE, JR No. E-10151 Exp. 12/31/2009 ELECTRICAL STATE OF CALIFORNIA 1 2
FOR REVISION ONLY

CONDUIT DATA

Conduit No	Reference	Size	Type	Total Fill (mm²)	Allowable Fill (mm²)	Included Cable No.	Conductor Type
2959	E-139	41	RGS conduit	0.00	534.55	Pull rope	Soft-Fiber Polyester
2960	E-139	41	RGS conduit	212.85	534.55	Pull rope	Soft-Fiber Polyester
						LP223-2A,4A	3 + 1 gnd #6,#8, 600 V, RHH/RHW insulation
2961	E-139	41	RGS conduit	0.00	534.55	Pull rope	Soft-Fiber Polyester
2962	E-138	41	RGS conduit	0.00	534.55	Pull rope	Soft-Fiber Polyester
2963	E-138	41	RGS conduit	0.00	534.55	Pull rope	Soft-Fiber Polyester
2964	E-138	41	RGS conduit	0.00	534.55	Pull rope	Soft-Fiber Polyester
2965	E-138	41	RGS conduit	0.00	534.55	Pull rope	Soft-Fiber Polyester
2966	E-138	41	RGS conduit	0.00	534.55	Pull rope	Soft-Fiber Polyester
2967	E-138	41	RGS conduit	0.00	534.55	Pull rope	Soft-Fiber Polyester
2T13	E-181 Thru E-186	305	152.4 mm siderail ladder tray	2780.99	8387.08	Pull rope	Soft-Fiber Polyester
	E-212A					2391	3-1/C #4/0 + 1/C #1/0 gnd, 15kV, EPR insulation
2T14	E-212, E-21B	305	152.4 mm siderail ladder tray	2780.99	8387.08	Pull rope	Soft-Fiber Polyester
						2391	3-1/C #4/0 + 1/C #1/0 gnd, 15kV, EPR insulation
2T14A	E-21, E-21E	305	152.4 mm siderail ladder tray	0.00	8387.08		
2T14B	E-21, E-21E	305	152.4 mm siderail ladder tray	0.00	8387.08		
2T21	E182,E207C,E264	610	152.4 mm siderail ladder tray	2120.21	16774.16	2121	1-3/C + gnd #1/0,600 V, EPR insulation
						2120	1-3/C + gnd #1/0,600 V, EPR insulation
						1201-1	1-2/C + gnd #10, 600 V, EPR insulation
						1201-2	1-2/C + gnd #10, 600 V, EPR insulation
						1201-6	1-2/C + gnd #10, 600 V, EPR insulation
						1201-4A	1-2/C #14, 600 V, EPR insulation
						1201-4B	1-2/C #14, 600 V, EPR insulation
						1201-4C	1-2/C #14, 600 V, EPR insulation
2T23	E-114B	760	152.4 mm siderail ladder tray	21921.01 (8)	22580.60	2202-2	1-3/C #14,600 V, EPR insulation
						A-3004-1	1-3/C + gnd #2,600 V, EPR insulation
						A-3003-1	1-3/C + gnd #4,600 V, EPR insulation
						A-2013-1	1-3/C + gnd #2,600 V, EPR insulation
						A-2012-1	1-3/C + gnd #2,600 V, EPR insulation
						2123	1-3/C + gnd #2,600 V, EPR insulation
						2202-3	1-7/C #16,600 V, EPR insulation
						2105	1-3/C + gnd #2,600 V, EPR insulation
						2106	1-3/C + gnd #2,600 V, EPR insulation
						2202-4	1-3/C #14,600 V, EPR insulation
						2104	1-3/C + gnd #2,600 V, EPR insulation
						2121	1-3/C + gnd #1/0,600 V, EPR insulation
						2204-1	1-3/C #14, 600 V, EPR insulation
						UP204-7	1-2/C + gnd #8,600 V, EPR insulation
						~~2119-A~~	~~1-3/C + gnd 250 Kcmil,600 V, EPR insulation~~
						(8)	
						2201-2	1-2/C + gnd #10,600 V, EPR insulation
						2123-2	1-3/C + gnd #2/0,600 V, EPR insulation
						2123-3	1-3/C + gnd #2/0,600 V, EPR insulation
						1118	1-3/C + gnd #2/0,600 V, EPR insulation
						2095	1-3/C + gnd #2,600 V, EPR insulation
						2096	1-3/C + gnd #2,600 V, EPR insulation
						2097	1-3/C + gnd #2,600 V, EPR insulation
						2098	1-3/C + gnd #2,600 V, EPR insulation
						2099	1-3/C + gnd #2,600 V, EPR insulation
						S-3053-1	1-3/C + gnd #2,600 V, EPR insulation
						2107	1-3/C + gnd #2,600 V, EPR insulation
						2120	1-3/C + gnd #1/0,600 V, EPR insulation
						2201-6	1-2/C + gnd #10,600 V, EPR insulation
						1201-1	1-2/C + gnd #10,600 V, EPR insulation
						2202-1	1-2/C + gnd #10,600 V, EPR insulation
						1201-2	1-2/C + gnd #10,600 V, EPR insulation
						1201-6	1-2/C + gnd #10,600 V, EPR insulation
						2204-2	1-3/C #16,600 V, EPR insulation
						Pull rope	Soft-Fiber Polyester
						A-3041-1	1-3/C + gnd #2,600 V, EPR insulation
						S-3052-1	1-3/C + gnd #2,600 V, EPR insulation
						2125	1-3/C + gnd 250 Kcmil,600 V, EPR insulation
						2103	1-3/C + gnd #2,600 V, EPR insulation
						~~S-3056-9~~	~~1-4/C #14,600 V, EPR insulation~~
						(8)	
						S-3056-6	1-4/C #14,600 V, EPR insulation
						2202-3A	1-2/C #14, 600 V, EPR insulation
						2201-4B	1-2/C #14, 600 V, EPR insulation
						2201-4C	1-2/C #14, 600 V, EPR insulation
						1201-4A	1-2/C #14, 600 V, EPR insulation
						1201-4B	1-2/C #14, 600 V, EPR insulation
						1201-4C	1-2/C #14, 600 V, EPR insulation

CONDUIT DATA

Conduit No	Reference	Size	Type	Total Fill (mm²)	Allowable Fill (mm²)	Included Cable No.	Conductor Type
						LP219-2,4	1-3/C + gnd #6,600 V, EPR insulation
						LP219-6,8	1-3/C + gnd #6,600 V, EPR insulation
						LP220-2,4	1-3/C + gnd #6,600 V, EPR insulation
						LP220-6,8	1-3/C + gnd #6,600 V, EPR insulation
						LP221-2,4	1-3/C + gnd #6,600 V, EPR insulation
						LP221-6,8	1-3/C + gnd #6,600 V, EPR insulation
						LP222-2,4	1-3/C + gnd #6,600 V, EPR insulation
						LP222-6,8	1-3/C + gnd #6,600 V, EPR insulation
						LP223-2,4	1-3/C + gnd #6,600 V, EPR insulation
						LP223-6,8	1-3/C + gnd #6,600 V, EPR insulation

For continuation, see next sheet.

CONDUIT AND TRAY SCHEDULE

E-418

STATE OF CALIFORNIA - DEPARTMENT OF TRANSPORTATION
Caltrans

DESIGN OVERSIGHT
BEHZAD GOLEMOHAMMADI

CALCULATED/DESIGNED BY PBP
CHECKED BY AB
DATE 8/02 REVISED BY
8/02 DATE REVISED

LAST REVISION 00-00-00
DATE PLOTTED => 05-JUL-2011
TIME PLOTTED => 14:57

DIST	COUNTY	ROUTE	KILOMETER POST TOTAL PROJECT	SHEET No	TOTAL SHEETS
04	SF	80	13.2/13.9	373 S1R2	1204

Caltrans Metric

Syn Yee Chin 01/07/11
REGISTERED ELECTRICAL ENGINEER DATE

REGISTERED PROFESSIONAL ENGINEER
SYN YEE CHIN
No. 18186
Exp. 09/30/2011
ELECTRICAL
STATE OF CALIFORNIA

PLANS APPROVAL DATE

PB AMERICAS, Inc.
A Parsons Brinckerhoff Company
303 Second St., Suite 700N
San Francisco, CA 94107-1317

The State of California or its officers or agents shall not be responsible for the accuracy or completeness of electronic copies of this plan sheet.

Caltrans now has a web site! To get to the web site, go to http://www.dot.ca.gov

REQUEST FOR INFORMATION NOT ADDRESSED IN THIS CCO REMAIN IN FORCE

MARK	DATE	DESCRIPTIONS	BY	CH'D	CCO#
2	07/01/11	TOS MODIFICATIONS	RR	RG	81
1	03/24/11	BIKE PATH CONDUIT	TW	RG	73
0	01/07/11	ELECTRICAL WARNING SYSTEMS	TW	RG	61

REVISIONS

CONTRACT CHANGE ORDER NO._____
SHEET_____ OF _____

CONDUIT DATA

Conduit No	Reference	Size	Type	Total Fill (mm²)	Allowable Fill (mm²)	Included Cable No.	Conductor Type
2T24	E-114, E-182	610	152.4 mm siderail ladder tray	2191.50	18064.48	LP219-2,4	1-3/C + gnd #6, 600 V, EPR insulation
						LP219-6,8	1-3/C + gnd #6, 600 V, EPR insulation
						Pull rope	Soft-Fiber Polyester
						UP204-7	1-2/C + gnd #8,600 V, EPR insulation
						UP204-1	1-2/C + gnd #10,600 V, EPR insulation
						UP204-8	1-2/C + gnd #8,600 V, EPR insulation
						2103	1-3/C + gnd #2,600 V, EPR insulation
						2095	1-3/C + gnd #2,600 V, EPR insulation
2T25	E-115, E-182	610	152,4 mm siderail ladder tray	3155.19	18064.48	UP205-7	1-2/C + gnd #8,600 V, EPR insulation
						UP205-1	1-2/C + gnd #10,600 V, EPR insulation
						LP220-2,4	1-3/C + gnd #6,600 V, EPR insulation
						LP220-6,8	1-3/C + gnd #6,600 V, EPR insulation
						Pull rope	Soft-Fiber Polyester
						S-3056-6	1-4/C #14,600 V, EPR insulation
						2202-2	1-3/C #14,600 V, EPR insulation
						2204-2	1-3/C #16,600 V, EPR insulation
						2096	1-3/C + gnd #2,600 V, EPR insulation
						2204-1	1-3/C #14, 600 V, EPR insulation
						2104	1-3/C + gnd #2,600 V, EPR insulation
						UP205-8	1-2/C + gnd #8,600 V, EPR insulation
						2202-3	1-7/C #16,600 V, EPR insulation
						1201-1	1-2/C + gnd #10, 600 V, EPR insulation
						1201-2	1-2/C + gnd #10, 600 V, EPR insulation
						1201-6	1-2/C + gnd #10, 600 V, EPR insulation
						1201-4A	1-2/C #14, 600 V, EPR insulation
						1201-4B	1-2/C #14, 600 V, EPR insulation
						1201-4C	1-2/C #14, 600 V, EPR insulation
2T26	E-117, E-183	610	152.4 mm siderail ladder tray	3050.84 (2)	18064.48	2202-1 (2)	1-2/C + gnd #10, 600 V, EPR insulation
						LP221-2,4	1-3/C + gnd #6,600 V, EPR insulation
						Pull rope	Soft-Fiber Polyester
						(2)	
						LP221-6,8	1-3/C + gnd #6,600 V, EPR insulation
						UP206-7	1-2/C + gnd #8,600 V, EPR insulation
						UP207-1	1-2/C + gnd #10,600 V, EPR insulation
						UP206-1	1-2/C + gnd #10,600 V, EPR insulation
						2202-2	1-3/C #14, 600 V, EPR insulation
						2105	1-3/C + gnd #2,600 V, EPR insulation
						2097	1-3/C + gnd #2,600 V, EPR insulation
						UP206-8	1-2/C + gnd #8,600 V, EPR insulation
						2202-3	1-7/C #16,600 V, EPR insulation
						2202-3A	1-2/C #14, 600 V, EPR insulation

THIS PLAN ACCURATE FOR ELECTRICAL WORK ONLY.

CONDUIT DATA

Conduit No	Reference	Size	Type	Total Fill (mm²)	Allowable Fill (mm²)	Included Cable No.	Conductor Type

For continuation, see next sheet.

CONDUIT AND TRAY SCHEDULE

E-418A

STATE OF CALIFORNIA - DEPARTMENT OF TRANSPORTATION
Caltrans

DESIGN OVERSIGHT
BEHZAD GOLEMOHAMMADI

CALCULATED/DESIGNED BY XX
CHECKED BY XX
DATE XX/10
DATE XX/10
REVISED BY
DATE REVISED

LAST REVISION 00-00-00
DATE PLOTTED => 05-JUL-2011
TIME PLOTTED => 14:57

DIST	COUNTY	ROUTE	KILOMETER POST TOTAL PROJECT	SHEET No	TOTAL SHEETS
04	SF	80	13.2/13.9	375 R6	1204

REGISTERED ELECTRICAL ENGINEER 12/19/02 DATE

12-6-04
PLANS APPROVAL DATE

REGISTERED PROFESSIONAL ENGINEER JENS ERLINGSSON No. 8249 Exp. 9/30/06 ELECTRICAL STATE OF CALIFORNIA

PB POWER, Inc.
A Parsons Brinckerhoff Company
303 Second St., Suite 700N
San Francisco, CA 94107-1317

The State of California or its officers or agents shall not be responsible for the accuracy or completeness of electronic copies of this plan sheet.

Caltrans now has a web site! To get to the web site, go to: http://www.dot.ca.gov

Caltrans Metric

REQUEST FOR INFORMATION NOT ADDRESSED IN THIS CCO REMAIN IN FORCE

MARK	DATE	DESCRIPTIONS	BY	CH'D	CCO#
6	07/12/11	TOS MODIFICATIONS	RR	RG	81
5	03/01/11	BASE INTEGRATION	RSB	WB	150
4	03/26/10	DEHUMIDIFIER SCADA INTERFACE	RR	RG FW	130
3	03/30/09	SERVICE PLATFORM ELECTRICAL CHANGES	RY RR	RG MP	55
2	02/25/08	CABLE TRAY CHANGES	TW	RG	42S1
1	03/04/08	BARRIER MODIFICATIONS	JS BM	RG SE	44

REVISIONS

CONTRACT CHANGE ORDER NO._____
SHEET_____ OF_____

REGISTERED PROFESSIONAL ENGINEER S. A. ESTOQUE JR No. E-10151 Exp. 12/31/2008 ELECTRICAL STATE OF CALIFORNIA 1 2
FOR REVISION ONLY

REGISTERED PROFESSIONAL ENGINEER FADI WALIEDDINE No. 11465 Exp. 12/31/2009 ELECTRICAL STATE OF CALIFORNIA 3
FOR REVISION ONLY

REGISTERED PROFESSIONAL ENGINEER SYN YEE CHIN No. 18186 Exp. 09/30/2011 ELECTRICAL STATE OF CALIFORNIA 4 5 6
FOR REVISION ONLY

CONDUIT DATA

Conduit No	Reference	Size	Type	Total Fill (mm2)	Allowable Fill (mm2)	Included Cable No.	Conductor Type
2T43	E-114B	610	6	10572.67	38709.60	2900-152C	4 pair #22, shielded pairs, FEP insulation
						2900-292A	4 pair #22, shielded pairs, FEP insulation
						2900-272C	4 pair #22, shielded pairs, FEP insulation
						2900-272B	4 pair #22, shielded pairs, FEP insulation
						2900-272A	4 pair #22, shielded pairs, FEP insulation
						2900-192C	4 pair #22, shielded pairs, FEP insulation
						2900-192B	4 pair #22, shielded pairs, FEP insulation
						2900-192A	4 pair #22, shielded pairs, FEP insulation
						2900-172C	4 pair #22, shielded pairs, FEP insulation
						2900-172B	4 pair #22, shielded pairs, FEP insulation
						2900-172A	4 pair #22, shielded pairs, FEP insulation
						1473-6	50 pair #18, shielded pairs, IS/OS shield 600 V, XLPE insul., PVC jacket
						2900-162A	4 pair #22, shielded pairs, FEP insulation
						2900-332C	4 pair #22, shielded pairs, FEP insulation
						2900-152B	4 pair #22, shielded pairs, FEP insulation
						2900-152A	4 pair #22, shielded pairs, FEP insulation
						2900-142A	4 pair #22, shielded pairs, FEP insulation
						2910-8	4 pair #22, shielded pairs, 300 V, PE insulation
						2119-2	4 pair #22, shielded pairs, 300 V, PE insulation
						2475-3C	12 Fiber, single mode fiberoptic cable
						MVDSE03A	MVDS DLC
						MVDSE01A	MVDS DLC
						MVDSE02A	MVDS DLC
						2154	1 - 2 pair, shielded #18 with IS/OA, 300 V, PVC jacket
						2900-162B	4 pair #22, shielded pairs, FEP insulation
						2900-442A	4 pair #22, shielded pairs, FEP insulation
						2474-10	50 pair #18, shielded pairs, IS/OS shield 600 V, XLPE insul., PVC jacket
						1474-6	50 pair #18, shielded pairs, IS/OS shield 600 V, XLPE insul., PVC jacket
						1473-4	50 pair #18, shielded pairs, IS/OS shield 600 V, XLPE insul., PVC jacket
						2910-7	4 pair #24, overall shielded, 300V, PE insulation
						2910-3	4 pair #22, shielded pairs, FEP insulation
						2910-2	4 pair #22, shielded pairs, FEP insulation
						2910-12	4 pair #22, shielded pairs, 300 V, PE insulation
						2910-11	1-3/C #16,600 V, EPR insulation
						2900-482A	4 pair #22, shielded pairs, FEP insulation
						2900-452B	4 pair #22, shielded pairs, FEP insulation
						2900-452A	4 pair #22, shielded pairs, FEP insulation
						2900-332A	4 pair #22, shielded pairs, FEP insulation
						2900-442B	4 pair #22, shielded pairs, FEP insulation
						2900-332B	4 pair #22, shielded pairs, FEP insulation
						2900-432A	4 pair #22, shielded pairs, FEP insulation
						2900-422B	4 pair #22, shielded pairs, FEP insulation
						2900-422A	4 pair #22, shielded pairs, FEP insulation
						2900-412C	4 pair #22, shielded pairs, FEP insulation
						2900-412B	4 pair #22, shielded pairs, FEP insulation
						2900-412A	4 pair #22, shielded pairs, FEP insulation
						2900-402A	4 pair #22, shielded pairs, FEP insulation
						2900-382C	4 pair #22, shielded pairs, FEP insulation
						2900-382B	4 pair #22, shielded pairs, FEP insulation
						2900-382A	4 pair #22, shielded pairs, FEP insulation
						2148	1 - 2 pair, shielded #18 with IS/OA, 300 V, PVC jacket
						2900-442C	4 pair #22, shielded pairs, FEP insulation
					6	CCTVE01A	HCC
						1473-8	50 pair #18, shielded pairs, IS/OS shield 600 V, XLPE insul., PVC jacket
						Pull rope	Soft-Fiber Polyester
						2475-3A	12 Fiber, single mode fiberoptic cable
						2475-3B	12 Fiber, single mode fiberoptic cable
						2475-3	72 Fiber, single mode fiberoptic riser cable
					6	CCTVE01B	HCC
						2900-432B	4 pair #22, shielded pairs, FEP insulation
						MVDSW03A	MVDS DLC
						2120-1	1-2PR #18 Twisted Shielded w/overall Shield
						1118-1	1-2PR #18 Twisted Shielded w/overall Shield
						2121-1	1-2PR #18 Twisted Shielded w/overall Shield
						2479-1	72 Fiber, single mode fiber optic riser cable inside brown innerduct

CONDUIT DATA

Conduit No	Reference	Size	Type	Total Fill (mm2)	Allowable Fill (mm2)	Included Cable No.	Conductor Type
						MVDSW03A	MVDS DLC
2T44	E-115, E-182	610	152.4 mm siderail solid bottom tray	5109.21	38709.60	2119-2	4 pair #22, shielded pairs, 300 V, PE insulation
						1473-4	50 pair #18, shielded pairs, IS/OS shield 600 V, XLPE insul., PVC jacket
						1474-5	50 pair #18, shielded pairs, IS/OS shield 600 V, XLPE insul., PVC jacket
						1474-4	50 pair #18, shielded pairs, IS/OS shield 600 V, XLPE insul., PVC jacket
						Pull rope	Soft-Fiber Polyester
						MVDSE01A	MVDS DLC
						2475-3A	12 Fiber, single mode fiberoptic cable
						1473-5	50 pair #18, shielded pairs, IS/OS shield 600 V, XLPE insul., PVC jacket
2T45	E-115, E-182	610	152.4 mm siderail solid bottom tray	7725.32	38709.60	2900-432B	4 pair #22, shielded pairs, FEP insulation
						2910-12	4 pair #22, shielded pairs, 300 V, PE insulation
						Pull rope	Soft-Fiber Polyester
						2900-412A	4 pair #22, shielded pairs, FEP insulation
						2910-11	1-3/C #16,600 V, EPR insulation
						2910-7	4 pair #24, overall shielded, 30V, PE insulation
						2910-10	4 pair #22, shielded pairs, 300 V, PE insulation
						2910-8	4 pair #22, shielded pairs, 300 V, PE insulation
						2900-422B	4 pair #22, shielded pairs, FEP insulation
						2900-422A	4 pair #22, shielded pairs, FEP insulation
						2900-412C	4 pair #22, shielded pairs, FEP insulation
						2900-412B	4 pair #22, shielded pairs, FEP insulation
						2900-382C	4 pair #22, shielded pairs, FEP insulation
						2900-402A	4 pair #22, shielded pairs, FEP insulation
						2900-272C	4 pair #22, shielded pairs, FEP insulation
						2900-382B	4 pair #22, shielded pairs, FEP insulation
						2900-382A	4 pair #22, shielded pairs, FEP insulation
						2900-332C	4 pair #22, shielded pairs, FEP insulation
						2900-332B	4 pair #22, shielded pairs, FEP insulation
						2900-332A	4 pair #22, shielded pairs, FEP insulation
						2900-292A	4 pair #22, shielded pairs, FEP insulation
						2900-172A	4 pair #22, shielded pairs, FEP insulation
						2900-192B	4 pair #22, shielded pairs, FEP insulation
						2900-142A	4 pair #22, shielded pairs, FEP insulation
						1474-5A	1 - 6 pair, shielded #18 with overall shield, 300 V, PVC jacket
						2910-3	4 pair #22, shielded pairs, FEP insulation
						2910-2	4 pair #22, shielded pairs, FEP insulation
						2900-482A	4 pair #22, shielded pairs, FEP insulation
						2900-452B	4 pair #22, shielded pairs, FEP insulation
						2120-1	1-2PR #18 Twisted Shielded w/overall Shield
						2121-1	1-2PR #18 Twisted Shielded w/overall Shield
						2155	1 - 2 pair, shielded #18 with IS/OA, 300 V, PVC jacket

For continuation, see next sheet

CONDUIT AND TRAY SCHEDULE

E-420

DRAFT 1 (03/01/11)

STATE OF CALIFORNIA - DEPARTMENT OF TRANSPORTATION

Caltrans

DESIGN OVERSIGHT: BEHZAD GOLEMOHAMMADI

CALCULATED/DESIGNED BY: PBP — CHECKED BY: AB

DATE 8/02 — DATE REVISED: 8/02

REVISED BY

LAST REVISION 00-00-00

DATE PLOTTED => 12-JUL-2011
TIME PLOTTED => 09:37

DIST	COUNTY	ROUTE	KILOMETER POST TOTAL PROJECT	SHEET No	TOTAL SHEETS
04	SF	80	13.2/13.9	376 R5	1204

REGISTERED ELECTRICAL ENGINEER 12/19/02 DATE

12-6-04
PLANS APPROVAL DATE

REGISTERED PROFESSIONAL ENGINEER JENS ERLINGSSON No. 8249 Exp. 9/30/06 ELECTRICAL STATE OF CALIFORNIA

PB POWER, Inc.
A Parsons Brinckerhoff Company
303 Second St., Suite 700N
San Francisco, CA 94107-1317

The State of California or its officers or agents shall not be responsible for the accuracy or completeness of electronic copies of this plan sheet.

Caltrans now has a web site! To get to the web site, go to http://www.dot.ca.gov

Caltrans Metric

REQUEST FOR INFORMATION NOT ADDRESSED IN THIS CCO REMAIN IN FORCE

MARK	DATE	DESCRIPTIONS	BY	CH'D	CCO#
5	07/01/11	TOS MODIFICATIONS	RR	RG	81
4	03/01/11	BASE INTEGRATION	RSB	WB	150
3	03/26/10	DEHUMIDIFIER SCADA INTERFACE	TW	RG SYC	130
2	02/25/08	CABLE TRAY CHANGES	TW	RG	42S1
1	03/04/08	BARRIER MODIFICATIONS	JS BM	RG SE	44

REVISIONS

CONTRACT CHANGE ORDER NO._____
SHEET_____ OF_____

REGISTERED PROFESSIONAL ENGINEER SYN YEE CHIN No. 18186 Exp. 09/30/2011 ELECTRICAL STATE OF CALIFORNIA

3 4 5 Syn Yee Chin
FOR REVISION ONLY

REGISTERED PROFESSIONAL ENGINEER S. A. ESTOQUE, JR. No. E-10151 Exp. 12/31/2008 ELECTRICAL STATE OF CALIFORNIA

1 2 S. Estoque
FOR REVISION ONLY

CONDUIT DATA

Conduit No	Reference	Size	Type	Total Fill (mm2)	Allowable Fill (mm2)	Included Cable No.	Conductor Type
						2900-452A	4 pair #22, shielded pairs, FEP insulation
						2900-442A	4 pair #22, shielded pairs, FEP insulation
						2900-442C	4 pair #22, shielded pairs, FEP insulation
						2900-442B	4 pair #22, shielded pairs, FEP insulation
						2900-272A	4 pair #22, shielded pairs, FEP insulation
						2900-162A	4 pair #22, shielded pairs, FEP insulation
						2900-192C	4 pair #22, shielded pairs, FEP insulation
						1474-5	50 pair #18, shielded pairs, IS/OS shield 600 V, XLPE insul., PVC jacket
						2900-432A	4 pair #22, shielded pairs, FEP insulation
						2900-192A	4 pair #22, shielded pairs, FEP insulation
						2900-172C	4 pair #22, shielded pairs, FEP insulation
						2900-172B	4 pair #22, shielded pairs, FEP insulation
						2900-162B	4 pair #22, shielded pairs, FEP insulation
						2900-152C	4 pair #22, shielded pairs, FEP insulation
						2900-152B	4 pair #22, shielded pairs, FEP insulation
						2900-152A	4 pair #22, shielded pairs, FEP insulation
						1474-5B	1 - 6 pair, shielded #18 with overall shield, 300 V, PVC jacket
						1474-6	50 pair #18, shielded pairs, IS/OS shield 600 V, XLPE insul., PVC jacket
						1473-5	50 pair #18, shielded pairs, IS/OS shield 600 V, XLPE insul., PVC jacket
						1473-6	50 pair #18, shielded pairs, IS/OS shield 600 V, XLPE insul., PVC jacket
						2900-272B	4 pair #22, shielded pairs, FEP insulation
2T46	E-115, E-183	610	152.4 mm siderail solid bottom tray	6170.68 5	38709.60	1474-6	50 pair #18, shielded pairs, IS/OS shield 600 V, XLPE insul., PVC jacket
						Pull rope	Soft-Fiber Polyester
						5 MVDSE02A	MVDS DLC
						5 CCTVE01A	HCC
						5 MVDSW03A	MVDS DLC
						5 CCTVE01B	HCC
						1473-7	50 pair #18, shielded pairs, IS/OS shield 600 V, XLPE insul., PVC jacket
						1474-7	50 pair #18, shielded pairs, IS/OS shield 600 V, XLPE insul., PVC jacket
						1473-6	50 pair #18, shielded pairs, IS/OS shield 600 V, XLPE insul., PVC jacket
						2475-3B	12 Fiber, single mode fiber optic cable
						2479-1	72 Fiber, single mode fiber optic riser cable inside brown innerduct
2T47	E-117, E-184	610	152.4 mm siderail solid bottom tray	4987.47	38709.60	1474-7	50 pair #18, shielded pairs, IS/OS shield 600 V, XLPE insul., PVC jacket
						MVDSE03A	MVDS DLC
						2475-3C	12 Fiber, single mode fiber optic cable
						1473-8	50 pair #18, shielded pairs, IS/OS shield 600 V, XLPE insul., PVC jacket
						1473-7	50 pair #18, shielded pairs, IS/OS shield 600 V, XLPE insul., PVC jacket
						1474-8	50 pair #18, shielded pairs, IS/OS shield 600 V, XLPE insul., PVC jacket
						Pull rope	Soft-Fiber Polyester
2T48	E-118, E-185	610	152.4 mm siderail solid bottom tray	6816.85	38709.60	Pull rope	Soft-Fiber Polyester
						1474-10	50 pair #18, shielded pairs, IS/OS shield 600 V, XLPE insul., PVC jacket
						1474-8A	1 - 6 pair, shielded #18 with overall shield, 300 V, PVC jacket
						1474-8B	1 - 6 pair, shielded #18 with overall shield, 300 V, PVC jacket
						1474-8	50 pair #18, shielded pairs, IS/OS shield 600 V, XLPE insul., PVC jacket
						2154	1 - 2 pair, shielded #18 with IS/OA, 300 V, PVC jacket
						2148	1 - 2 pair, shielded #18 with IS/OA, 300 V, PVC jacket
						2149	1 - 2 pair, shielded #18 with IS/OA, 300 V, PVC jacket
						1473-10	50 pair #18, shielded pairs, IS/OS shield 600 V, XLPE insul., PVC jacket
						1473-8	50 pair #18, shielded pairs, IS/OS shield 600 V, XLPE insul., PVC jacket
						2474-10	50 pair #18, shielded pairs, IS/OS shield 600 V, XLPE insul., PVC jacket
						2150	1 - 2 pair, shielded #18 with IS/OA, 300 V, PVC jacket
						1118-1	1-2PR #18 Twisted Shielded w/overall shield

CONDUIT DATA

Conduit No	Reference	Size	Type	Total Fill (mm2)	Allowable Fill (mm2)	Included Cable No.	Conductor Type
2T49	E-212, E-21B	305	152.4 mm siderail ladder tray	1904.72	19354.80	Pull rope	Soft-Fiber Polyester
						2900-152A	4 pair #22, shielded pairs, FEP insulation
						2900-152C	4 pair #22, shielded pairs, FEP insulation
						2900-162A	4 pair #22, shielded pairs, FEP insulation
						2900-162B	4 pair #22, shielded pairs, FEP insulation
						2910-2	4 pair #22, shielded pairs, FEP insulation
						2910-3	4 pair #22, shielded pairs, FEP insulation
						1473-4	50 pair #18, shielded pairs, IS/OS shield 600 V, XLPE insul., PVC jacket
						2475-3	72 Fiber, single mode fiberoptic riser cable
						2900-152B	4 pair #22, shielded pairs, FEP insulation
						2900-142A	4 pair #22, shielded pairs, FEP insulation
2T53	E-181 Thru E-186 E-212A	610	152.4 mm siderail solid bottom tray	0.00	38709.60	Pull rope	Soft-Fiber Polyester
2T54	E-212, E-21B	610	152.4 mm siderail ladder tray	0.00	16774.16	Pull rope	Soft-Fiber Polyester
3000		41	RGS conduit	323.69	534.55	UP204-8-2	2 + 1gnd #8,#10, 600 V, RHH/RHW insulation
						UP204-7-1	1-2/C + gnd #8,600 V, EPR insulation
3001		41	RGS conduit	454.92	534.55	UP204-7	1-2/C + gnd #8,600 V, EPR insulation
						UP204-8	1-2/C + gnd #8,600 V, EPR insulation
3002		53	RGS conduit	684.34	879.42	UP204-7	1-2/C + gnd #8,600 V, EPR insulation
						UP205-7-1	1-2/C + gnd #8,600 V, EPR insulation
						UP204-8-2	2 + 1gnd #8,#10, 600 V, RHH/RHW insulation
						UP204-8-1	3 + 1gnd #8,#10, 600 V, RHH/RHW insulation
3003		41	RGS conduit	454.92	534.55	UP205-8	1-2/C + gnd #8,600 V, EPR insulation
						UP205-7	1-2/C + gnd #8,600 V, EPR insulation
3004		53	RGS conduit	684.34	879.42	UP205-8-2	2 + 1gnd #8,#10, 600 V, RHH/RHW insulation
						UP205-8-1	3 + 1gnd #8,#10, 600 V, RHH/RHW insulation
						UP206-7-1	1-2/C + gnd #8,600 V, EPR insulation
						UP205-7	1-2/C + gnd #8,600 V, EPR insulation
3005		41	RGS conduit	454.92	534.55	UP206-8	1-2/C + gnd #8,600 V, EPR insulation
						UP206-7	1-2/C + gnd #8,600 V, EPR insulation
3006		53	RGS conduit	684.34	879.42	UP206-7	1-2/C + gnd #8,600 V, EPR insulation
						UP207-7-1	1-2/C + gnd #8,600 V, EPR insulation
						UP206-8-1	3 + 1gnd #8,#10, 600 V, RHH/RHW insulation
						UP206-8-2	2 + 1gnd #8,#10, 600 V, RHH/RHW insulation
3007		41	RGS conduit	454.92	534.55	UP207-8	1-2/C + gnd #8,600 V, EPR insulation
						UP207-7	1-2/C + gnd #8,600 V, EPR insulation
3008		53	RGS conduit	684.34	879.42	UP207-8-2	2 + 1gnd #8,#10, 600 V, RHH/RHW insulation
						UP207-8-1	3 + 1gnd #8,#10, 600 V, RHH/RHW insulation
						UP207-7	1-2/C + gnd #8,600 V, EPR insulation
						UP208-7-1	1-2/C + gnd #8,600 V, EPR insulation
3009		41	RGS conduit	454.92	534.55	UP208-8	1-2/C + gnd #8,600 V, EPR insulation
						UP208-7	1-2/C + gnd #8,600 V, EPR insulation

For continuation, see next sheet.

CONDUIT AND TRAY SCHEDULE

E-421

ALL DIMENSIONS ARE IN MILLIMETERS UNLESS OTHERWISE SHOWN

DRAFT 1 (03/01/11)

STATE OF CALIFORNIA - DEPARTMENT OF TRANSPORTATION

Caltrans

DESIGN OVERSIGHT
BEHZAD GOLEMOHAMMADI

CALCULATED/DESIGNED BY
CHECKED BY

DATE 8/02	PBP	REVISED BY
8/02	AB	DATE REVISED

FOR REDUCED PLANS ORIGINAL SCALE IS IN MILLIMETERS 0 20 40 60 80

DGN FILE =>04-0120f1_0376R05.dgn
USERNAME =>llorico

CU 04251

EA 0120F1

LAST REVISION 00-00-00

DATE PLOTTED => 05-JUL-2011
TIME PLOTTED => 14:57

DIST	COUNTY	ROUTE	KILOMETER POST TOTAL PROJECT	SHEET No	TOTAL SHEETS
04	SF	80	13.2/13.9	382 R5	1204

REGISTERED ELECTRICAL ENGINEER 12/19/02 DATE

12-6-04
PLANS APPROVAL DATE

REGISTERED PROFESSIONAL ENGINEER JENS ERLINGSSON No. 8249 Exp. 9/30/06 ELECTRICAL STATE OF CALIFORNIA

PB POWER, Inc.
A Parsons Brinckerhoff Company
303 Second St., Suite 700N
San Francisco, CA 94107-1317

The State of California or its officers or agents shall not be responsible for the accuracy or completeness of electronic copies of this plan sheet.

Caltrans now has a web site! To get to the web site, go to http://www.dot.ca.gov

Caltrans Metric

REQUEST FOR INFORMATION NOT ADDRESSED IN THIS CCO REMAIN IN FORCE

MARK	DATE	DESCRIPTIONS	BY	CH'D	CCO#
5	07/01/11	TOS MODIFICATIONS	RR	RG	81
4	03/26/10	DEHUMIDIFIER SCADA INTERFACE	RR	RG FW	130
3	12/23/09	TOWER BASE MEP	RR AWG	RG FW	79
2	09/18/09	TOWER UTILITY PANELS	JS TW	RG	70
1	02/19/08	ELECTRICAL MODIFICATIONS	MP EL	RR	42

REVISIONS

CONTRACT CHANGE ORDER NO.
SHEET ____ OF ____

REGISTERED PROFESSIONAL ENGINEER MARCELL FUMIO TAKAKI No. E 8651 Exp. 9/30/2008 ELECTRICAL STATE OF CALIFORNIA 1

FOR REVISION ONLY

REGISTERED PROFESSIONAL ENGINEER FADI WALIEDDINE No. 11465 Exp. 12/31/2009 ELECTRICAL STATE OF CALIFORNIA 2 3

FOR REVISION ONLY

REGISTERED PROFESSIONAL ENGINEER SYN YEE CHIN No. 18186 Exp. 09/30/2011 ELECTRICAL STATE OF CALIFORNIA 4 5

FOR REVISION ONLY

CONDUIT DATA

Conduit No.	Reference	Size	Type	Total Fill (mm²)	Allowable Fill (mm²)	Included Cable No.	Conductor Type
3297	E-264, E-264A	27	RGS-PVC coated conduit	219.84	229.03	Pull rope	Soft-Fiber Polyester
						2119-2	4 pair #22,shielded pairs,300 V,PE insulation
						2121-1	1-2PR #18 Twisted Shielded w/overall shield
3298	E-265	53	RGS-PVC coated conduit	102.61	879.42	Pull rope	Soft-Fiber Polyester
						UP210-9	1-3/C #12,600 V, EPR insulation
3299	E-287	27	RGS-PVC coated conduit	196.20	229.03	Pull rope	Soft-Fiber Polyester
						2120-1	1-2PR #18 Twisted Shielded w/overall shield
3303	E-96	53	RGS conduit	490.14		Pull rope	Soft-Fiber Polyester
3304	E-96	53	RGS conduit	490.14		Pull rope	Soft-Fiber Polyester
3307	E-266	41	RGS conduit	262.68	534.55	Pull rope	Soft-Fiber Polyester
						UP210-16	1-3/C + gnd #8, 600V EPR insulation
3308	E-266	53	RGS conduit	717.60	879.42	Pull rope	Soft-Fiber Polyester
						UP210-14	1-3/C + gnd #8, 600V EPR insulation
						UP210-23	1-2/C + gnd #8, 600V EPR insulation
						UP210-26	1-2/C + gnd #8, 600V EPR insulation
3309	E-266	53	RGS conduit	490.14		Pull rope	Soft-Fiber Polyester
						UP210-15	1-3/C + gnd #8, 600V EPR insulation
						UP210-22	1-2/C + gnd #8, 600V EPR insulation
3311	E-265	53	RGS-PVC coated conduit	0.00	879.42	Pull rope	Soft-Fiber Polyester
3313	E-266, E-266A	53	RGS-PVC coated conduit	454.92	879.42	Pull rope	Soft-Fiber Polyester
						UP210-21	1-2/C + gnd #8, 600V EPR insulation
						UP210-23	1-2/C + gnd #8, 600V EPR insulation
3314	E-266, E-266A	53	RGS-PVC coated conduit	454.92	879.42	Pull rope	Soft-Fiber Polyester
						UP210-22	1-2/C + gnd #8, 600V EPR insulation
						UP210-24	1-2/C + gnd #8, 600V EPR insulation
3315	E-266, E-266A	53	RGS-PVC coated conduit	286.0	879.42	Pull rope	Soft-Fiber Polyester
						UP210-5 & 7	1-4/C + gnd #8 600V EPR insulation
3316	E-264B, E-264C	78	RGS-PVC coated conduit	1300.80	1935.24	Pull rope	Soft-Fiber Polyester
	E-278, E-284					UP210-2 & 4	1-4/C + gnd #6, 600 V, EPR insulation
						UP210-14 & 18	1-4/C + gnd #8, 600 V, EPR insulation
						UP210-21	1-2/C + gnd #8, 600V EPR insulation
						UP210-23	1-2/C + gnd #8, 600V EPR insulation
						UP210-26	1-2/C + gnd #8, 600V EPR insulation
3316A	E-266	53	RGS-PVC coated conduit	581.18	879.42	Pull rope	Soft-Fiber Polyester
						UP210-2	1-2/C + gnd #8, 600V EPR insulation
						UP210-4	1-2/C + gnd #8, 600V EPR insulation
						UP210-21	1-2/C + gnd #8, 600V EPR insulation
3316B	E-266	53	RGS-PVC coated conduit	559.91	879.42	Pull rope	Soft-Fiber Polyester
						UP210-2 & 4	1-4/C + gnd #6, 600 V, EPR insulation
						UP210-21	1-2/C + gnd #8, 600V EPR insulation
3319	E-264, E-264A	78	RGS-PVC coated conduit	1521.28	1935.24	2121	1-3/C + gnd #1/0, 600 V, EPR insulation
						2120	1-3/C + gnd #1/0, 600 V, EPR insulation
						Pull rope	Soft-Fiber Polyester
3320	E-264	78	RGS-PVC coated conduit	1281.36	1935.24	2120	1-3/C + gnd #1/0, 600 V, EPR insulation
						Pull rope	Soft-Fiber Polyester
						2123-2	1-3/C + gnd #2, 600 V, EPR insulation
3320A	E-287	53	RGS-PVC coated conduit	754.18	879.42	2120	1-3/C + gnd #1/0, 600 V, EPR insulation
						Pull rope	Soft-Fiber Polyester
3322	E-264, E-264A	78	RGS-PVC coated conduit	754.18	1935.24	2119-A	1-3/C + gnd #1/0, 600 V, EPR insulation
						Pull rope	Soft-Fiber Polyester
3322C	E-265	78	RGS-PVC coated conduit	754.18	1935.24	2119-A	1-3/C + gnd #1/0, 600 V, EPR insulation
						Pull rope	Soft-Fiber Polyester
3323	E-264	78	RGS-PVC coated conduit	754.18	1935.24		
						Pull rope	Soft-Fiber Polyester
						2121	1-3/C + gnd #1/0,600 V, EPR insulation
3323A	E-286	78	RGS-PVC coated conduit	959.40	1935.24		
						Pull rope	Soft-Fiber Polyester
						2121	1-3/C + gnd #1/0,600 V, EPR insulation
						UP210-28	1-2/C + gnd #12, 600V EPR insulation
						UP210-30	1-2/C + gnd #12, 600V EPR insulation

CONDUIT DATA

Conduit No.	Reference	Size	Type	Total Fill (mm²)	Allowable Fill (mm²)	Included Cable No.	Conductor Type
3323B	E-286, E-287	78	RGS-PVC coated conduit	959.40	1935.24		
						Pull rope	Soft-Fiber Polyester
						2121	1-3/C + gnd #1/0,600 V, EPR insulation
						UP210-28	
						UP210-30	1-2/C #12 + gnd, 600V, EPR insulation
3323C	E-287, E-287A	78	RGS-PVC coated conduit	959.40	1935.24		
						Pull rope	Soft-Fiber Polyester
						2121	1-3/C + gnd #1/0,600 V, EPR insulation
						UP210-28	1-2/C #12 + gnd, 600V, EPR insulation
						UP210-30	1-2/C #12 + gnd, 600V, EPR insulation
3324	E-286	53	RGS-PVC coated conduit	98.10	879.42	Pull rope	Soft-Fiber Polyester
						2121-1	1-2PR #18 Twisted shielded with overall shield
3324A	E-286, E-287	53	RGS-PVC coated conduit	131.79	879.42	Pull rope	Soft-Fiber Polyester
						2121-1	1-2PR #18 Twisted shielded with overall shield
3324B	E-264	53	RGS-PVC coated conduit	0.00	879.42	Pull rope	Soft-Fiber Polyester
3324C	E-287, E-287A	53	RGS-PVC coated conduit	98.10	879.42	Pull rope	Soft-Fiber Polyester
						2121-1	1-2PR #18 Twisted shielded with overall shield
3329	E-265	53	RGS-PVC coated conduit	0.00	879.42	Pull rope	Soft-Fiber Polyester
~~3330~~							
~~3330C~~							5
~~3330D~~							
~~3330E~~							
~~3330F~~							
3333	E-264	78	RGS-PVC coated conduit	754.18	1935.24	Pull rope	Soft-Fiber Polyester
						2123	1-3/C + gnd #1/0, 600 V, EPR insulation
3337	E-264B	78	RGS-PVC coated conduit	618.45	1935.24	Pull rope	Soft-Fiber Polyester
						UP210-6 & 8	1-4/C + gnd #6, 600 V, EPR insulation
						UP210-13 & 17	1-4/C + gnd #8, 600 V, EPR insulation
3337A	E-266	53	RGS-PVC coated conduit	585.13	879.42	Pull rope	Soft-Fiber Polyester
						UP210-6 & 8	1-4/C + gnd #6, 600 V, EPR insulation
						UP210-13	1-3/C + gnd #8, 600V EPR insulation

For continuation, see next sheet.

CONDUIT AND TRAY SCHEDULE

E-427

DATE	REVISED BY	DATE	REVISED BY
8/02	PBP	8/02	AB

CALCULATED/DESIGNED BY — CHECKED BY

DESIGN OVERSIGHT — BEHZAD GOLEMOHAMMADI

STATE OF CALIFORNIA - DEPARTMENT OF TRANSPORTATION

Caltrans

LAST REVISION 00-00-00 — DATE PLOTTED => 05-JUL-2011 TIME PLOTTED => 14:57

FOR REDUCED PLANS ORIGINAL SCALE IS IN MILLIMETERS 0 20 40 60 80

DGN FILE =>04-0120f1_0382R05.dgn
USERNAME =>llorico

CU 04251 EA 0120F1

DIST	COUNTY	ROUTE	KILOMETER POST TOTAL PROJECT	SHEET No	TOTAL SHEETS
04	SF	80	13.2/13.9	383 R4	1204

REGISTERED ELECTRICAL ENGINEER 12/19/02 DATE

12-6-04
PLANS APPROVAL DATE

REGISTERED PROFESSIONAL ENGINEER JENS ERLINGSSON No. 8249 Exp. 9/30/06 ELECTRICAL STATE OF CALIFORNIA

PB POWER, Inc.
A Parsons Brinckerhoff Company
303 Second St., Suite 700N
San Francisco, CA 94107-1317

The State of California or its officers or agents shall not be responsible for the accuracy or completeness of electronic copies of this plan sheet.

Caltrans now has a web site! To get to the web site, go to http://www.dot.ca.gov

Caltrans Metric

REQUEST FOR INFORMATION NOT ADDRESSED IN THIS CCO REMAIN IN FORCE

MARK	DATE	DESCRIPTIONS	BY	CH'D	CCO#
4	07/01/11	TOS MODIFICATIONS	RR	RG	81
3	03/26/10	DEHUMIDIFIER SCADA INTERFACE	TW	RG SYC	130
2	09/18/09	TOWER UTILITY PANELS	JS TW	RG FW	70
1	02/19/08	ELECTRICAL MODIFICATIONS	MP EL	RR	42

REVISIONS

CONTRACT CHANGE ORDER NO._____
SHEET_____ OF_____

REGISTERED PROFESSIONAL ENGINEER SYN YEE CHIN No. 18186 Exp. 09/30/2011 ELECTRICAL STATE OF CALIFORNIA
FOR REVISION ONLY 3 4

REGISTERED PROFESSIONAL ENGINEER MARCELL FUMIO TAKAKI No. E 8651 Exp. 9/30/2008 ELECTRICAL STATE OF CALIFORNIA
FOR REVISION ONLY 1

REGISTERED PROFESSIONAL ENGINEER FADI WALIEDDINE No. 11465 Exp. 12/31/2009 ELECTRICAL STATE OF CALIFORNIA
FOR REVISION ONLY 2

CONDUIT DATA

Conduit No.	Reference	Size	Type	Total Fill (mm²)	Allowable Fill (mm²)	Included Cable No.	Conductor Type
3339	E-264, E-264A	53	RGS-PVC coated conduit	754.18	879.42	2125	1-3/C +gnd #1/0, 600 V,EPR insulation
3348	E-264A, E-281	41	RGS-PVC coated conduit	300.88	534.55	MVDSE02A	MVDS DLC
						MVDSW03A	MVDS DLC
3348C	E-345, E-281	27	RGS-PVC coated conduit	150.44	229.03	MVDSE02A	MVDS DLC
3348D	E-345, E-281	27	RGS-PVC coated conduit	150.44	229.03	MVDSW03A	MVDS DLC
3349	E-264A, E-281	41	RGS-PVC coated conduit	176.6 (4)	534.55	CCTVE01B	HCC (4)
						2120-1	1-2PR #18 Twisted Shielded w/ overall shield
3349C	E-281	41	RGS-PVC coated conduit	78.5 (4)	534.55	CCTVE01B	HCC (4)
3351A	E-264	53	RGS-PVC coated conduit	527.18	879.42	Pull rope	Soft-Fiber Polyester
						2123-3	1-3C#2 + gnd, 600 V, EPR insulation
3353	E285B	53	RGS-PVC coated conduit	306.56	879.42	Pull Rope	Soft-Fiber Polyester
						UP210-1B-13 & 14	4-#10+gnd, 600V, RHH/RHW insulation
						UP210-1B-5	1-2C#12 + gnd, 600V, EPR insulation
						UP210-1A-5	1-2C#12 + gnd, 600V, EPR insulation
3354	E285B	53	RGS conduit	491.22	879.42	Pull Rope	Soft-Fiber Polyester
						UP210-1B-5	1-2C#12 + gnd, 600V, EPR insulation
						UP210-1A-5	1-2C#12 + gnd, 600V, EPR insulation
						UP210-1B-1 & 6	1-4C#8 + gnd, 600V, EPR insulation

CONDUIT DATA

Conduit No.	Reference	Size	Type	Total Fill (mm²)	Allowable Fill (mm²)	Included Cable No.	Conductor Type
3359	E-264A,E-281	41	RGS-PVC coated conduit	78.5 (4)	534.55	CCTVE01A	HCC (4)
3359C	E-281	41	RGS-PVC coated conduit	78.5 (4)	534.55	CCTVE01A	HCC (4)
3364	E-285B	53	RGS-PVC coated conduit	205.22	879.42	Pull Rope	Soft-Fiber Polyester
						UP210-1A-5	1-2C#12 + gnd, 600V, EPR insulation
						UP210-1B-5	1-2C#12 + gnd, 600V, EPR insulation

For continuation, see next sheet.

CONDUIT AND TRAY SCHEDULE

E-428

REVISED BY	DATE REVISED
PBP	AB 8/02

CALCULATED/DESIGNED BY — CHECKED BY

DESIGN OVERSIGHT — BEHZAD GOLEMOHAMMADI

STATE OF CALIFORNIA - DEPARTMENT OF TRANSPORTATION
Caltrans

LAST REVISION 00-00-00 — DATE PLOTTED => 05-JUL-2011 TIME PLOTTED => 14:57

DIST	COUNTY	ROUTE	KILOMETER POST TOTAL PROJECT	SHEET No	TOTAL SHEETS
04	SF	80	13.2/13.9	389 R6	1204

Caltrans Metric

12/19/02
REGISTERED ELECTRICAL ENGINEER DATE

12-6-04
PLANS APPROVAL DATE

REGISTERED PROFESSIONAL ENGINEER JENS ERLINGSSON No. 8249 Exp. 9/30/06 ELECTRICAL STATE OF CALIFORNIA

PB POWER, Inc.
A Parsons Brinckerhoff Company
303 Second St., Suite 700N
San Francisco, CA 94107-1317

The State of California or its officers or agents shall not be responsible for the accuracy or completeness of electronic copies of this plan sheet.

Caltrans now has a web site! To get to the web site, go to http://www.dot.ca.gov

REQUEST FOR INFORMATION NOT ADDRESSED IN THIS CCO REMAIN IN FORCE

MARK	DATE	DESCRIPTIONS	BY	CH'D	CCO#
6	07/01/11	TOS MODIFICATIONS	RR	RG	81
5	01/07/11	ELECTRICAL WARNING SYSTEMS	TW	RG	61
4	03/26/10	DEHUMIDIFIER SCADA INTERFACE	RR	RG FW	130
3	08/03/09	ELECTRICAL WARNING SYSTEMS	RY RR	RG FW	61
2	03/30/09	SERVICE PLATFORM ELECTRICAL CHANGES	RR RY	RG MP	55
1	03/04/08	BARRIER MODIFICATIONS	JS BM	RG SE	44

REVISIONS

CONTRACT CHANGE ORDER NO._____
SHEET_____ OF_____

REGISTERED PROFESSIONAL ENGINEER SYN YEE CHIN No. 18186 Exp. 09/30/2011 ELECTRICAL STATE OF CALIFORNIA
Syn Yee Chin
FOR REVISION ONLY 4 5 6

REGISTERED PROFESSIONAL ENGINEER FADI WALIEDDINE No. 11465 Exp. 12/31/2009 ELECTRICAL STATE OF CALIFORNIA
FOR REVISION ONLY 2 3

REGISTERED PROFESSIONAL ENGINEER S. A. ESTOQUE, JR No. E-10151 Exp. 12/31/2009 ELECTRICAL STATE OF CALIFORNIA
FOR REVISION ONLY 1

CONDUIT DATA

Conduit No	Reference	Size	Type	Total Fill (mm²)	Allowable Fill (mm²)	Included Cable No.	Conductor Type
4224	E-115	78	RGS conduit	227.46	1935.24	Pull rope	Soft-Fiber Polyester
						UP105-9	1-2/C + gnd #8,600 V, EPR insulation
4225	E-115	53	RGS conduit	317.80	1935.24	Pull rope	Soft-Fiber Polyester
						1474-5B	1 - 6 pair, shielded #18 with overall shield, 300 V, PVC jacket
						1474-5A	1 - 6 pair, shielded #18 with overall shield, 300 V, PVC jacket
4226	E-115	78	RGS conduit	98.10	1935.24	Pull rope	Soft-Fiber Polyester
						1115-1	
4241	E-116	78	RGS conduit	446.81	1935.24	1255-2	1-3/C #16,600 V, EPR insulation
						1202-3	1-7/C #16,600 V, EPR insulation
						1202-2	1-3/C #14,600 V, EPR insulation
						1202-1	1-2/C + gnd #10, 600 V, EPR insulation
						Pull rope	Soft-Fiber Polyester
						1202-3A	1-2/C #14,600 V, EPR insulation
4242	E-116	78	RGS conduit	821.29 6	1935.24		6
						Pull rope	Soft-Fiber Polyester
						UP106-6	1-2/C + gnd #8, 600 V, EPR insulation
						UP106-8	1-2/C + gnd #8, 600 V, EPR insulation
						2202-1	1-2/C + gnd #10, 600 V, EPR insulation
						2202-3A	1-2/C #14,600 V, EPR insulation
4243	E-116	53	RGS conduit	527.18	879.42	Pull rope	Soft-Fiber Polyester
						1096	1-3/C + gnd #2,600 V, EPR insulation
4244	E-116	53	RGS conduit	527.18	879.42	Pull rope	Soft-Fiber Polyester
						1097	1-3/C + gnd #2,600 V, EPR insulation
4245	E-116	53	RGS conduit	0.00	1935.24	Pull rope	Soft-Fiber Polyester
4246	E-116	78	RGS conduit	324.26	1935.24	MVDSW03A	MVDS DLC
						Pull rope	Soft-Fiber Polyester
						CCTVE01BD	TVL
						CCTVE01BC	TVC
4248	E-116	78	RGS-PVC coated conduit	30.19	1935.24	Pull rope	Soft-Fiber Polyester
						1475-3B	12 Fiber, single mode fiberoptic cable
4261	E-117	78	RGS conduit	62.07	1935.24	Pull rope	Soft-Fiber Polyester
						1256-1	1-3/C #16,600 V, EPR insulation
4262	E-117	78	RGS conduit	0.00	1935.24	Pull rope	Soft-Fiber Polyester
4263	E-117	53	RGS conduit	527.18	879.42	Pull rope	Soft-Fiber Polyester
						1098	1-3/C + gnd #2,600 V, EPR insulation
4264	E-117	78	RGS conduit	0.00	1935.24	Pull rope	Soft-Fiber Polyester
4265	E-117	53	RGS conduit	150.44	1935.24	Pull rope	Soft-Fiber Polyester
						MVDSW04A	MVDS DLC
4266	E-117	78	RGS conduit	0.00	1935.24	Pull rope	Soft-Fiber Polyester
4268	E-117	78	RGS-PVC coated conduit	30.19	1935.24	Pull rope	Soft-Fiber Polyester
						1475-3C	12 Fiber, single mode fiberoptic cable
4281	E-118	78	RGS conduit	0.00	1935.24	Pull rope	Soft-Fiber Polyester

CONDUIT DATA

Conduit No	Reference	Size	Type	Total Fill (mm²)	Allowable Fill (mm²)	Included Cable No.	Conductor Type
4282	E-118	78	RGS conduit	932.14	1935.24		
						2201-1	1-2/C + gnd #10, 600 V, EPR insulation
						2201-2	1-2/C + gnd #10, 600 V, EPR insulation
						2201-6	1-2/C + gnd #10, 600 V, EPR insulation
						Pull rope	Soft-Fiber Polyester
						2201-4	1-9/C #16,600 V, EPR insulation
						2201-3	1-3/C #14,600 V, EPR insulation
						S-3056-8	1-4/C #14,600 V, EPR insulation
						2201-4A	1-2/C #14,600 V, EPR insulation
						2201-4B	1-2/C #14,600 V, EPR insulation
						2201-4C	1-2/C #14,600 V, EPR insulation
4283	E-118	53	RGS conduit	527.18	879.42	1099	1-3/C + gnd #2,600 V, EPR insulation
						Pull rope	Soft-Fiber Polyester
4284	E-118	78	RGS conduit	454.92	1935.24	Pull rope	Soft-Fiber Polyester
						UP108-3	1-2/C + gnd #8,600 V, EPR insulation
						UP108-2	1-2/C + gnd #8,600 V, EPR insulation
4285	E-118	53	RGS conduit	317.80	1935.24	Pull rope	Soft-Fiber Polyester
						1474-8A	1 - 6 pair, shielded #18 with overall shield, 300 V, PVC jacket
						1474-8B	1 - 6 pair, shielded #18 with overall shield, 300 V, PVC jacket
4286	E-118	78	RGS conduit	98.10	1935.24	Pull rope	Soft-Fiber Polyester
						1117-1	1-2PR #18 Twisted Shielded w/overall Shield
4301	E-96	78	RGS conduit	366.10	1935.24	A-3001-1	1-3/C + gnd #4,600 V, EPR insulation
						Pull rope	Soft-Fiber Polyester
4303	E-96	41	RGS conduit	0.00	534.55	Pull rope	Soft-Fiber Polyester
4304	E-96	41	RGS conduit	212.85	534.55	Pull rope	Soft-Fiber Polyester
						A-3001-2	3 + 1 gnd #6,#8, 600 V, RHH/RHW insulation
4305	E-96	41	RGS conduit	0.00	534.55	Pull rope	Soft-Fiber Polyester
4306	E-96	41	RGS conduit	0.00	534.55	Pull rope	Soft-Fiber Polyester
4307	E-96	53	RGS conduit	0.00	879.42	Pull rope	Soft-Fiber Polyester
4308	E-96	53	RGS conduit	0.00	879.42	Pull rope	Soft-Fiber Polyester
4309	E-96	41	RGS conduit	0.00	534.55	Pull rope	Soft-Fiber Polyester
4310	E-96	41	RGS conduit	0.00	534.55	Pull rope	Soft-Fiber Polyester

For continuation, see next sheet.

CONDUIT AND TRAY SCHEDULE

E-434

REVISED BY	DATE REVISED
PBP	8/02

CALCULATED/ DESIGNED BY	CHECKED BY
AB	

DESIGN OVERSIGHT
BEHZAD GOLEMOHAMMADI

STATE OF CALIFORNIA - DEPARTMENT OF TRANSPORTATION
Caltrans

FOR REDUCED PLANS ORIGINAL SCALE IS IN MILLIMETERS 0 20 40 60 80

DGN FILE =>04-0120f1_0389R06.dgn
USERNAME =>llorico

CU 04251

EA 0120F1

LAST REVISION 00-00-00

DATE PLOTTED => 06-JUL-2011
TIME PLOTTED => 14:57

DIST	COUNTY	ROUTE	KILOMETER POST TOTAL PROJECT	SHEET No	TOTAL SHEETS
04	SF	80	13.2/13.9	395 R7	1204

REGISTERED ELECTRICAL ENGINEER 12/19/02 DATE

12-6-04
PLANS APPROVAL DATE

REGISTERED PROFESSIONAL ENGINEER JENS ERLINGSSON No. 8249 Exp. 9/30/06 ELECTRICAL STATE OF CALIFORNIA

PB POWER, Inc.
A Parsons Brinckerhoff Company
303 Second St., Suite 700N
San Francisco, CA 94107-1317

The State of California or its officers or agents shall not be responsible for the accuracy or completeness of electronic copies of this plan sheet.

Caltrans now has a web site! To get to the web site, go to http://www.dot.ca.gov

Caltrans Metric

REQUEST FOR INFORMATION NOT ADDRESSED IN THIS CCO REMAIN IN FORCE

MARK	DATE	DESCRIPTIONS	BY	CH'D	CCO#
7	07/01/11	TOS MODIFICATIONS	RR	RG	81
6	03/24/11	BIKE PATH CONDUIT	TW	RG	73
5	06/11/10	BIKE PATH CONDUIT	TW	RG	73
4	03/26/10	DEHUMIDIFIER SCADA INTERFACE	RR	RG FW	130
3	08/03/09	ELECTRICAL WARNING SYSTEMS	RY RR	RG FW	61
2	03/30/09	SERVICE PLATFORM ELECTRICAL CHANGES	RR RY	RG MP	55
1	03/04/08	BARRIER MODIFICATIONS	JS BM	RG SE	44

REVISIONS

CONTRACT CHANGE ORDER NO._____
SHEET_____ OF_____

REGISTERED PROFESSIONAL ENGINEER S. A. ESTOQUE, JR. No. E-10151 Exp. 12/31/2008 ELECTRICAL STATE OF CALIFORNIA
FOR REVISION ONLY 1

REGISTERED PROFESSIONAL ENGINEER FADI WALIEDDINE No. 11465 Exp. 12/31/2011 ELECTRICAL STATE OF CALIFORNIA
FOR REVISION ONLY 2 3

REGISTERED PROFESSIONAL ENGINEER SYN YEE CHIN No. 18186 Exp. 09/30/2011 ELECTRICAL STATE OF CALIFORNIA
FOR REVISION ONLY 4 5 6 7

5 REVISIONS SUPERCEDED

CONDUIT DATA

Conduit No	Reference	Size	Type	Total Fill (mm²)	Allowable Fill (mm²)	Included Cable No.	Conductor Type
5210	E-114	78	RGS conduit	1323.45	1935.24	Pull rope	Soft-Fiber Polyester
						2119-2	4 pair #22, shielded pairs, 300 V, PE insulation
						1473-5	50 pair #18, shielded pairs, IS/OS shield 600 V, XLPE insul., PVC jacket
5210A	E-71A	41	Liquidtight Flex. Metal cond.		534.55	Pull rope	Soft-Fiber Polyester
5211	E-114	78	RGS conduit	0.00	1935.24	Pull rope	Soft-Fiber Polyester
5221	E-115	78	RGS conduit	187.79	1935.24	2202-2	1-3/C #14, 600 V, EPR insulation
						Pull rope	Soft-Fiber Polyester
						2202-3	1-7/C #16, 600 V, EPR insulation
5222	E-115	78	RGS conduit	830.76	1935.24	LP220-2,4	1-3/C + gnd #6, 600 V, EPR insulation
						LP220-6,8	1-3/C + gnd #6, 600 V, EPR insulation
						Pull rope	Soft-Fiber Polyester
						S-3056-6	1-4/C #14, 600 V, EPR insulation
						2204-2	1-3/C #14, 600 V, EPR insulation
						2204-1	1-3/C #14, 600 V, EPR insulation
5223	E-115	78	RGS conduit	1235.86	1935.24	UP205-1	1-2/C + gnd #10 ,600 V, EPR insulation
						Pull rope	Soft-Fiber Polyester
						UP206-1	1-2/C + gnd #10 ,600 V, EPR insulation
						UP205-8	1-2/C + gnd #8, 600 V, EPR insulation
						2096	1-3/C + gnd #2, 600 V, EPR insulation
						UP205-7	1-2/C + gnd #8, 600 V, EPR insulation
5224	E-115	78	RGS conduit	227.46	1935.24	Pull rope	Soft-Fiber Polyester
						UP205-6	1-2/C + gnd #8, 600 V, EPR insulation
5225	E-115	53	RGS conduit	527.18	879.42	Pull rope	Soft-Fiber Polyester
						2104	1-3/C + gnd #2, 600 V, EPR insulation
5226	E-115	78	RGS conduit	1558.08	1935.24	2120-1	1-2PR #18 Twisted Shielded w/overall Shield
						2121-1	1-2PR #18 Twisted Shielded w/overall Shield
						2910-11	1-3/C #16, 600 V, EPR insulation
						1474-5	50 pair #18, shielded pairs, IS/OS shield 600 V, XLPE insul., PVC jacket
						2155	1-2 pair, shielded #18 with IS/OA, 300V PVC jacket
						Pull rope	Soft-Fiber Polyester
5227	E-115	78	RGS conduit	1201.71	1935.24	Pull rope	Soft-Fiber Polyester
						1474-6	50 pair #18, shielded pairs, IS/OS shield 600 V, XLPE insul., PVC jacket
5228	E-115	78	RGS conduit	1445.19	1935.24	2910-10	4 pair #22, shielded pairs, 300 V, PE insulation
						Pull rope	Soft-Fiber Polyester
						1473-5	50 pair #18, shielded pairs, IS/OS shield 600 V, XLPE insul., PVC jacket
						2910-12	4 pair #22, shielded pairs, 300 V, PE insulation
5229	E-115	78	RGS conduit	317.80	1935.24	1474-5A	1 - 6 pair, shielded #18 with overall shield, 300 V, PVC jacket
						Pull rope	Soft-Fiber Polyester
						1474-5B	1 - 6 pair, shielded #18 with overall shield, 300 V, PVC jacket
5230	E-114	78	RGS conduit	0.00	1935.24	Pull rope	Soft-Fiber Polyester
5231	E-114	78	RGS conduit	0.00	1935.24	Pull rope	Soft-Fiber Polyester
5232	E-114	78	RGS conduit	1201.71	1935.24	1473-4	50 pair #18, shielded pairs, IS/OS shield 600 V, XLPE insul., PVC jacket
						Pull rope	Soft-Fiber Polyester
5233	E-115	78	RGS conduit	98.10	1935.24	Pull rope	Soft-Fiber Polyester
						2120-1	1-2PR #18 Twisted Shielded w/overall Shield
5234	E-115	78	RGS conduit	0.00	1935.24	Pull rope	Soft-Fiber Polyester
5235	E-115	78	RGS conduit	1201.71	1935.24	Pull rope	Soft-Fiber Polyester
						1473-6	50 pair #18, shielded pairs, IS/OS shield 600 V, XLPE insul., PVC jacket
5236	E-116	53	RGS conduit	0.00	1935.24	Pull rope	Soft-Fiber Polyester

CONDUIT DATA

Conduit No	Reference	Size	Type	Total Fill (mm²)	Allowable Fill (mm²)	Included Cable No.	Conductor Type
5237	E-116	78	RGS conduit	0.00	1935.24	Pull rope	Soft-Fiber Polyester
5238	E-116	78	RGS conduit	1201.71	1935.24	1473-6	50 pair #18, shielded pairs, IS/OS shield 600 V, XLPE insul., PVC jacket
						Pull rope	Soft-Fiber Polyester
5241	E-116	78	RGS conduit	942.43	1935.24	2202-3	1-7/C #16, 600 V, EPR insulation
						2202-2	1-3/C #14, 600 V, EPR insulation
						2105	1-3/C + gnd #2, 600 V, EPR insulation
						2202-1	1-2/C + gnd #8, 600 V, EPR insulation
						Pull rope	Soft-Fiber Polyester
5242	E-116	53	RGS conduit	0.00 7	1935.24	Pull rope	Soft-Fiber Polyester
5243	E-116	53	RGS conduit	527.18	879.42	Pull rope	Soft-Fiber Polyester
						2097	1-3/C + gnd #2, 600 V, EPR insulation
5244	E-116	78	RGS conduit	648.58	1935.24	Pull rope	Soft-Fiber Polyester
						LP221-2,4	1-3/C + gnd #6, 600 V, EPR insulation
						LP221-6,8	1-3/C + gnd #6, 600 V, EPR insulation
5245	E-116	78	RGS conduit	642.71	1935.24	2202-1	1-2/C + gnd #8, 600 V, EPR insulation
						2202-2	1-3/C #14, 600 V, EPR insulation
						UP206-9	1-2/C + gnd #8, 600 V, EPR insulation
						2204-3	1-7/C #16, 600 V, EPR insulation
						Pull rope	Soft-Fiber Polyester
5246	E-116	78	RGS conduit	1201.71	1935.24	1474-6	50 pair #18, shielded pairs, IS/OS shield 600 V, XLPE insul., PVC jacket
						Pull rope	Soft-Fiber Polyester
5247	E-116	78	RGS conduit	1430.65 7	1935.24	Pull rope	Soft-Fiber Polyester
						MVDSE02A	MVDS DLC
						CCTVE01A	HCC
						1474-7	50 pair #18, shielded pairs, IS/OS shield 600 V, XLPE insul., PVC jacket
5249	E-116	78	RGS-PVC coated conduit	30.19	1935.24	2475-3B	12 Fiber, single mode fiberoptic cable
						Pull rope	Soft-Fiber Polyester
5250	E-116	78	RGS conduit	1201.71	1935.24	1473-7	50 pair #18, shielded pairs, IS/OS shield 600 V, XLPE insul., PVC jacket
						Pull rope	Soft-Fiber Polyester

For continuation, see next sheet.

CONDUIT AND TRAY SCHEDULE

E-440

THIS PLAN ACCURATE FOR ELECTRICAL WORK ONLY.

DESIGN OVERSIGHT
BEHZAD GOLEMOHAMMADI

CALCULATED/DESIGNED BY PBP
CHECKED BY AB
DATE 8/02 8/02
REVISED BY DATE REVISED

STATE OF CALIFORNIA - DEPARTMENT OF TRANSPORTATION
Caltrans

LAST REVISION 00-00-00
DATE PLOTTED => 05-JUL-2011
TIME PLOTTED => 14:57

DIST	COUNTY	ROUTE	KILOMETER POST TOTAL PROJECT	SHEET No.	TOTAL SHEETS
04	SF	80	13.2/13.9	407 R5	1204

REGISTERED ELECTRICAL ENGINEER 12/19/02 DATE

12-6-04
PLANS APPROVAL DATE

REGISTERED PROFESSIONAL ENGINEER JENS ERLINGSSON No. 8249 Exp. 9/30/06 ELECTRICAL STATE OF CALIFORNIA

PB POWER, Inc.
A Parsons Brinckerhoff Company
303 Second St., Suite 700N
San Francisco, CA 94107-1317

The State of California or its officers or agents shall not be responsible for the accuracy or completeness of electronic copies of this plan sheet.

Caltrans now has a web site! To get to the web site, go to http://www.dot.ca.gov

Caltrans Metric

REQUEST FOR INFORMATION NOT ADDRESSED IN THIS CCO REMAIN IN FORCE

MARK	DATE	DESCRIPTIONS	BY	CH'D	CCO#
5	07/01/11	TOS MODIFICATIONS	RR	RG	81
4	01/07/11	ELECTRICAL WARNING SYSTEMS	TW	RG	61
3	03/26/10	DEHUMIDIFIER SCADA INTERFACE	RR	RG FW	130
2	02/25/08	CABLE TRAY CHANGES	RG	SE	42S1
1	02/19/08	ELECTRICAL MODIFICATIONS	MP EL	RR	42

REVISIONS

CONTRACT CHANGE ORDER NO._____
SHEET_____ OF _____

REGISTERED PROFESSIONAL ENGINEER S. A. ESTOQUE, JR No. E-10151 Exp. 12/31/2008 ELECTRICAL STATE OF CALIFORNIA
FOR REVISION ONLY 1 2

REGISTERED PROFESSIONAL ENGINEER SYN YEE CHIN No. 18186 Exp. 09/30/2011 ELECTRICAL STATE OF CALIFORNIA
FOR REVISION ONLY 3 4 5

CONDUIT DATA

Conduit No	Reference	Size	Type	Total Fill (mm2)	Allowable Fill (mm2)	Included Cable No.	Conductor Type
3177A	E-264A	78	Liquidtight flex metal conduit	1889.83	1928.98	2119-B	3+1gnd, #250 kcmil, #1/0, 600V, EPR insulation
						2204-2	1-3/C #14, 600V, EPR Insulation
						A-3057-1	1-3/C + gnd #2, 600V, EPR Insulation
3177B	E-264A	78	RGS - PVC coated conduit	1889.83	1935.24	2119-B	3+1gnd, #250 kcmil, #1/0, 600V, EPR insulation
						2204-2	1-3/C #14, 600V, EPR Insulation
						A-3057-1	1-3/C + gnd #2, 600V, EPR Insulation
3278A	E-264A	78	Liquidtight flex metal conduit	1827.85	1928.98	2123-2	1-3/C + gnd #2/0, 600V, EPR Insulation
						2123-3	1-3/C + gnd #2/0, 600V, EPR Insulation
						2910-11	1-3/C #16, 600V, EPR Insulation
3278B	E-264A	78	RGS - PVC coated conduit	1827.85	1953.24	2123-2	1-3/C + gnd #2/0, 600V, EPR Insulation
						2123-3	1-3/C + gnd #2/0, 600V, EPR Insulation
						2910-11	1-3/C #16, 600V, EPR Insulation
3294A	E-264A	78	Liquidtight flex metal conduit		1928.98	Pull rope	Soft-fiber polyester
3294B	E-264A	78	RGS - PVC coated conduit		1935.24	Pull rope	Soft-fiber polyester
3319A	E-264A	78	Liquidtight flex metal conduit	1675.89	1928.98	2121	1-3/C + gnd #1/0, 600V, EPR Insulation
				5		2120	1-3/C + gnd #1/0, 600V, EPR Insulation
						GND	1-#250 kcmil, bare copper 5
3319B	E-264A	78	RGS - PVC coated conduit	1675.89	1935.24	2121	1-3/C + gnd #1/0, 600V, EPR Insulation
				5		2120	1-3/C + gnd #1/0, 600V, EPR Insulation
						GND	1-#250 kcmil, bare copper 5
3322A	E-264A	78	Liquidtight flex metal conduit	1889.83	1928.98	2119-A	3+1gnd, #250 kcmil, #1/0, 600V, EPR insulation
						2123	1-3/C + gnd #2, 600V, EPR Insulation
						2204-1	1-3/C #14, 600V, EPR Insulation
3322B	E-264A	78	RGS - PVC coated conduit	1889.83	1935.24	2119-A	3+1gnd, #250 kcmil, #1/0, 600V, EPR insulation
						2123	1-3/C + gnd #2, 600V, EPR Insulation
						2204-1	1-3/C #14, 600V, EPR Insulation
3330A	E-264A	78	Liquidtight flex metal conduit	0.00	1928.98	Pull rope	Soft-fiber polyester
				5			5
3330B	E-264A	78	RGS - PVC coated conduit	0.00	1935.24	Pull rope	Soft-fiber polyester
				5			
3339A	E-264A	78	Liquidtight flex metal conduit	1445.00	1928.98	2125	3+1gnd, #250 kcmil, #1/0, 600V, EPR insulation
						GND	1-#250 kcmil, bare copper
3339B	E-264A	78	RGS - PVC coated conduit	1445.00	1935.24	2125	3+1gnd, #250 kcmil, #1/0, 600V, EPR insulation
						GND	1-#250 kcmil, bare copper
3348A	E-264A	78	Liquidtight flex metal conduit		1928.98	Pull rope	Soft-fiber polyester
3348B	E-264A	78	RGS - PVC coated conduit		1935.24	Pull rope	Soft-fiber polyester
3349A	E-264A	78	Liquidtight flex metal conduit	196.20	1928.98	Pull rope	Soft-fiber polyester
						2120-1	1-2 pair #18 twisted shielded w/overall shield
						2121-1	1-2 pair #18 twisted shielded w/overall shield
3349B	E-264A	78	RGS - PVC coated conduit	196.20	1928.98	Pull rope	Soft-fiber polyester
						2120-1	1-2 pair #18 twisted shielded w/overall shield
						2121-1	1-2 pair #18 twisted shielded w/overall shield

CONDUIT DATA

Conduit No	Reference	Size	Type	Total Fill (mm2)	Allowable Fill (mm2)	Included Cable No.	Conductor Type
3359A	E-264A	78	Liquidtight flex metal conduit	457.88	1928.98	CCTVE01A	HCC
				5			5
						MVDSE02A	MVDS DLC
						MVDSE03A	MVDS DLC
						CCTVE01B	HCC 5
3359B	E-264A	78	RGS - PVC coated conduit	457.88	1935.24	CCTVE01A	HCC
				5			5
						MVDSE02A	MVDS DLC
						MVDSE03A	MVDS DLC
						CCTVE01B	HCC
							5
8011A	E-264A	78	Liquidtight flex metal conduit	697.03	1935.24	Pull rope	Soft-fiber polyester
						1201-1	1-2/C + gnd #10, 600V, EPR Insulation
						1201-2	1-2/C + gnd #10, 600V, EPR Insulation
						1201-6	1-2/C + gnd #10, 600V, EPR Insulation
						1201-4A	1-2/C #14, 600V, EPR Insulation
						1201-4B	1-2/C #14, 600V, EPR Insulation
						1201-4C	1-2/C #14, 600V, EPR Insulation
						2204-2	1-3/C + gnd #14, 600V, EPR Insulation
8011B	E-264A	78	RGS - PVC coated conduit	697.03	1935.24	Pull rope	Soft-fiber polyester
						1201-1	1-2/C + gnd #10, 600V, EPR Insulation
						1201-2	1-2/C + gnd #10, 600V, EPR Insulation
						1201-6	1-2/C + gnd #10, 600V, EPR Insulation
						1201-4A	1-2/C #14, 600V, EPR Insulation
						1201-4B	1-2/C #14, 600V, EPR Insulation
						1201-4C	1-2/C #14, 600V, EPR Insulation
						2204-2	1-3/C + gnd #14, 600V, EPR Insulation
9057A	E-264A	78	Liquidtight flex metal conduit	442.35	1928.98	2910-12	4 pair #22, shielded pairs, 300V, PE insulation
						2910-8	4 pair #22, shielded pairs, 300V, PE insulation
						2910-7	4 pair #24, overall shielded, 300V, PE insulation
						2119-2	4 pair #22, shielded pairs, 300V, PE insulation
9057B	E-264A	78	RGS - PVC coated conduit	442.35	1935.24	2910-12	4 pair #22, shielded pairs, 300V, PE insulation
						2910-8	4 pair #22, shielded pairs, 300V, PE insulation
						2910-7	4 pair #24, overall shielded, 300V, PE insulation
						2119-2	4 pair #22, shielded pairs, 300V, PE insulation
9057C	E-264A, E-366	21	RGS - PVC coated conduit	62.07	187.69	2910-11	1-3/C #16, 600V, EPR Insulation

CONDUIT AND TRAY SCHEDULE E-449C

DATE	REVISED BY
3/04	JE

DATE	REVISED

CALCULATED/DESIGNED BY EJL
CHECKED BY JE

DESIGN OVERSIGHT
BEHZAD GOLEMOHAMMADI

STATE OF CALIFORNIA - DEPARTMENT OF TRANSPORTATION
Caltrans

LAST REVISION 00-00-00
DATE PLOTTED => 05-JUL-2011
TIME PLOTTED => 14:57

FOR REDUCED PLANS ORIGINAL SCALE IS IN MILLIMETERS 0 20 40 60 80

DGN FILE =>04-0120f1_0407R05.dgn
USERNAME =>llorico

CU 04251 EA 0120F1