DIST	COUNTY	ROUTE	KILOMETER POST TOTAL PROJECT	SHEET No	TOTAL SHEETS
04	SF	80	13.2/13.9	91R3	1204

REGISTERED ELECTRICAL ENGINEER 12/19/02 DATE

12-6-04
PLANS APPROVAL DATE

REGISTERED PROFESSIONAL ENGINEER JENS ERLINGSSON No. 8249 Exp. 9/30/06 ELECTRICAL STATE OF CALIFORNIA

PB POWER, Inc.
A Parsons Brinckerhoff Company
303 Second St., Suite 700N
San Francisco, CA 94107-1317

The State of California or its officers or agents shall not be responsible for the accuracy or completeness of electronic copies of this plan sheet.

Caltrans now has a web site! To get to the web site, go to http://www.dot.ca.gov

Caltrans Metric

REQUEST FOR INFORMATION NOT ADDRESSED IN THIS CCO REMAIN IN FORCE

MARK	DATE	DESCRIPTIONS	BY	CH'D	CCO#
3	01/14/10	TOWER BASE MEP	RR	RG FW	79
2	09/18/09	TOWER UTILITY PANELS	JS	FW	70
1	02/19/08	ELECTRICAL MODIFICATIONS	MP EL	RR	42

REVISIONS

CONTRACT CHANGE ORDER NO. 79
SHEET 2 OF 18

SYMBOLS

(See ES-1A and ES-1B for Additional Standard Symbols)

LAYOUT PLAN

- Barrier Pull Box, for type and size, see Pull Box Schedule
- PB-2A — Pull Box PB-2A for type and size, see Pull Box Schedule
- Conduit Coupling
- (A) — Equipment or Material Designation A=Sequential description
- (1) — Sheet Notes, applicable only to the Drawing 1=Sequential number
- 1 — Project Notes, Applicable for all Drawings 1=sequential number
- (J) — Junction Box, Conduit Fitting
- Electrical Equipment or Indicated on Plan Drawings
- Pole Mounted Lighting Fixture- See Lighting Pole Schedule for Type and Quantity
- Fluorescent Lighting Fixture
- Compact Fluorescent Lighting Fixture, Ceiling Mounted or main cable and suspender base metal halide lighting fixture
- Compact Fluorescent Lighting Fixture Wall Mounted
- Soffit Lighting Fixture or tower marker light
- (G) — Navigation Channel Marker Light - Green Color
- (R) — Navigation Pier Marker Light - Red Color
- (A1) (A2) — Aviation Lighting
- F — Fog Detector
- F — Fog Horn
- Pole Flood Light
- Single Receptacle, 20 A, 125 V, Straight blade, with deep single gang weatherproof and threaded cap
- GFCI WP — Duplex Receptacle, 125 V, 20 A
  MH=450 mm above floor unless noted
  GFCI=Ground Fault Circuit Interrupter
  WP=Weatherproof
- $a WP — Single Pole Switch, 120/277 V, 20 A
  a - indicates Fixtures controlled
  WP - Weatherproof Cover
  MH - 1400 mm unless noted
- $3a WP — Three-way switch, 120/277 V, 20 A or 30 A
  a - indicates Fixtures controlled
  WP - indicates Weatherproof Cover
  MH - 1400 mm unless noted
- $4a WP — Four-way switch, 120/277 V, 20 A or 30 A (3)
  a - indicates Fixtures controlled
  WP - indicates Weatherproof Cover
  MH - 1400 mm unless noted
- 30 A — Disconnect Switch 30 A-Frame size
- Conduit turned up
- Conduit turned down
- Conduit or Cable run, exposed
- Conduit run concealed in wall, concrete barrier, slab or routed underground duct bank
- Combination Expansion - Deflection fittings
- Flexible Conduit
- CT — Cable Tray
- Cable Tray
- Cables or Conduit down to Equipment (see plan for conduit number)
- Call Box, State furnished
- Ground Bare Copper Wire, Stranded
- Cable To Cable Exothermic Type Ground Connections
- Cable Ground Connection to Equipment, Compression Type
- Cable with Pigtail Ground Connections (see plan for length)

TRAFFIC OPERATIONS SYSTEMS (TOS)

- CCTV Camera (Mounted at Lighting Pole)
- Changeable Message Sign
- Preformed Loops
- Microwave Vehicle Detection Sensor (Mounted at Lighting Pole)
- Ramp Meter Signal

SINGLE LINE DIAGRAM

- 200/5 MRCT 3 — MM — SSPP — 67 / 67N
  Microprocessor protective relay
  MM = Metering Module
  SSPP = Solid State Protective Package
  67,67N = Directional Overcurrent Relay
  MRCT = Multi Ratio Current Transformer
  200/5 = Current Amp/Ratio
  3 = Quantity
- 1200 A / 500 MVA — N.C.(or N.O.) — 52 — 52-11N
  Vacuum Circuit Breaker, (Drawout Type)
  1200 A = Rating
  500 MVA = Nominal Interrupting Class
  52 11N = Assigned Breaker Number
  N.C. = Normally Closed
  N.O. = Normally Open
- 600-800 A / 42000 — 52S-1 E.O. — 800/5 3 — L,S,G
  Air Circuit Breaker (Drawout Type)
  600-800 A = Rating
  42000 = Interrupting Current
  E.O. = Electrically Operated
  52S-1 = Assigned breaker Number
  800/5 = Current Transformer Setting
  3 = Quantity
  Solid state Trip Device
  L = Long Time Delay
  S = Short Time Pick up/Delay
  G = Ground Fault pick up/Delay
- 750 kVA 12.47 kV 480 V
  Transformer, Distribution, Dry Type
  12.47 kV = Delta Primary
  480 V = Wye Secondary
  750 kVA = Size
- MCP — 2 or 30 A
  Combination Motor Starter, Drawout Type
  MCP = Motor Circuit Protector
  2 = Starter NEMA Size
  30 A = Contactor Rating
- 30 A
  Safety Switch,
  30 A = Frame Size
- (3)
  Rotating Motor
  3 = kW Rating
- 50 AT / 150 AF
  Molded Case Circuit Breaker, Drawout Type
  50 AT = Trip Rating
  150 AF = Frame Size
- Package Equipment or Panelboard
- 12 kV-120 V
  Potential Transformer
  Connected Open Delta
- 800/5 3
  Current Transformer
  800/5 = Current AMP/Ratio
  3 = Quantity
- Stress Relief Cable Connection
- or
  Fuse

ELECTRICAL/CONNECTION DIAGRAMS

- BK W — Signal Cable with Shield
- Contact, Normally open
- Contact, Normally Closed
- (M) or — Relay, Mechanical
  M = Motor
  C = Contactor
  42 = Running Circuit Breaker
  X or Y = Auxiliary
  R = Industrial
  TD = Time Delay
  PEC = Photo Electric Control
- OL — Motor Starter Overload Relay Thermal Bimetallic Element (OL-Overload)
- ON/OFF Switch
- DC Batteries
- AC/DC Inverter (Battery Charger/Rectifier)
- End Resistor and Capacitor
- Photoelectric Sensor
- 6 7 — Communication Cable Noise Suppressor
- Terminal Block
- Duplex Receptacle
- Cabinet Fluorescent Light

REGISTERED PROFESSIONAL ENGINEER MANUEL FUMIO TAKAKI No. E 8651 Exp. 9/30/2010 ELECTRICAL STATE OF CALIFORNIA

FOR REVISION ONLY (1)

REGISTERED PROFESSIONAL ENGINEER FADI WALIEDDINE No. 11465 Exp. 12/31/2011 ELECTRICAL STATE OF CALIFORNIA

FOR REVISION ONLY (2) (3)

DEVICE NUMBER DEFINITIONS

27B	12.47 kV Bus Undervoltage Relay
27D	DC Undervoltage Relay
27F	Feeder Undervoltage Relay
27UV	480 V Bus Undervoltage Relay
42	Running Circuit Breaker
43/R	Manual Transfer / Remote
43/L	Manual Transfer / Local
49	Thermal Relay
50	Instantaneous Overcurrent Relay
51	AC Time Overcurrent Relay
51/51N	Phase and Ground Fault Time Overcurrent Relay
52	AC Circuit Breaker
67	AC Directional Overcurrent Relay
67N	AC Directional Ground Overcurrent Relay
86	Lock-Out Relay
88	Auxiliary Motor

ELECTRICAL SYMBOLS

NO SCALE

E-6

DATE	CALCULATED/ DESIGNED BY	CHECKED BY	REVISED BY	DATE REVISED
08/02	AB	JW		09/02

DESIGN OVERSIGHT: BEHZAD GOLEMOHAMMADI

STATE OF CALIFORNIA - DEPARTMENT OF TRANSPORTATION

Caltrans

LAST REVISION 00-00-00

DATE PLOTTED => 1/13/2010
TIME PLOTTED => 1:15:40 PM

FOR REDUCED PLANS ORIGINAL SCALE IS IN MILLIMETERS 0 20 40 60 80

DGN FILE =>t:\13103\ms\pse\SAS Struc\CCO\SAS CC079\2009-12-23_Issued for Submittal\04-0120F1_0091R03.dgn
USERNAME =>llorico

CU 04251 | EA 0120F1

TRAFFIC OPERATIONS SYSTEMS (TOS)

AVO	Analog Video Output
CCR	Camera Control Receiver
CCU	Camera Control Unit
CIA	Controller Interface Assembly
COMM	Communication
FDU	Fiber Distribution Unit
F/O	Fiber Optic
FODM	Fiber Optic Data Modem
FDC	Fiber Optic Drop Cable
FPC	Fiber Optic Pigtail Cable
FSC	Fiber Splice Closure
FTC	Fiber Optic Trunkline Cable
IF	Input File
MVDS	Microwave Vehicle Detection Sensor
PDA	Power Distribution Assembly
PL	Preformed Loop Detection Station
SCA	Serial Cable Assembly
SMFO	Single Mode Fiber Optic
TB	Terminal Box
TSC	Trunkline Splice Closure
TVCP	CCTV Camera Control Power Cable
TVC	CCTV Camera Control Cable
TVL	CCTV Camera Video Cable
TVP	CCTV Camera Power Cable
VTDD	Video Transmitter Duplex Data

PROJECT NOTES

1. 27C, 2#12 + #12 G.
2. 27C, 2#10 + #10 G.
3. 27C, 4#10 + #10 G.
4. 27C, 3#10 + #10 G.
5. 27C (Type 4), 2#12 + #12 G.
6. 27C (Type 4), 2#10 + #10 G.
7. 41C, 2-6 pairs #18, IS/OA.
8. 78C, 50 Pairs #18, IS/OA.
9. 27C, 3/C #6 + #8G.
10. 21C, 2-1 pair #18 (for Call Box signal) shielded pairs and overall shield.
11. 21C, 3#12 (for Call Box power).
12. 21C, (4) 1 pair #18 (for Call Box signal). Part of (2) 1-2 pairs #18, shielded pairs and overall shield.
13. 78C, 2#2 + #6 G and 2#10 + #10 G (for CMS Power).
14. 78C, Harness #4 and Harness #5 (for CMS Signal).
15. 41C, Cable type TVP and TVCP (for CCTV Power).
16. 41C, Cable type TVC and TVL (for CCTV Control Signal).
18. 41C, Cable type MVDS DLC (for MVDS Signal).
20. 78C, Cable type 10 DLC (for Preformed Loop Signal).
21. 27C (Liquidtight flexible metal conduit) 6#10 + #10 G.
22. 27C (Liquidtight flexible metal conduit) 3#10 + #10 G.
23. 27C, 7#10 + #10 G.
24. 27C, 6#10 + #10 G.

PROJECT NOTES (Continuation)

25. 27C, 7#10 + #10 G.
26. 41C, 3#6 + #8 G.
27. 41C, 3#8 + #10 G.
28. 21C, PVC coated - 2#10 + #10 G.
29. 21C, PVC coated, 3#12 (for Call Box Power).
30. 500 kcmil Bare Copper Wire.
31. 250 kcmil Bare Copper Wire.
32. #4/0 Bare Copper Wire.
33. #2 Bare Copper Wire.
34. 41C, 3#6 + #8 G, 3#8 + #10 G.
35. 41C, 6#8 + #10 G.
36. 21C, PVC coated, 1-2 pairs #18 (For Call Box signal).
37. Metal clad type cable with PVC overall jacket 3/C #10 (for Bike Path lighting).
38. Metal clad type cable with PVC overall jacket 1-2 pairs #18, shielded pairs and overall shield (for Call Box signal).
39. Metal clad type cable with PVC overall jacket 3/C #12 (for Call Box signal).
40. 78C, Cable Type A Fiber Optic.
41. 21C, (Liquidtight flexible metal conduit) 2#10 + 10 G.
42. 27C, 2#12 + #12G, 2#10 + #10G.
43. 21C, (Liquidtight flexible metal conduit) 2#12 + 12 G.
44. 41C, 2#12 + #12 G, 6#10 + #10 G.
45. 27C, 2#12 + #12 G, 4#10 + #10 G.
46. 27C, Liquidtight flexible metal conduit, 4#10 + #10G.
47. 41C, Liquidtight flexible metal conduit, (MVDS DLC).
48. 27C, 3#6 + #8G. Liquidtight flexible metal conduit.
49. 21C, PVC coated, 2#10 + #10G & 2/C #14
50. 21C Liquidtight flexible metal conduit 2#10 + #10G, 2/C #14
51. 41C Liquidtight flexible metal conduit 3#6 + #8G, 2/C #14
52. 41C, Liquidtight flexible metal conduit 4#10 + 2#10 G
53. 41C, PVC coated 4#10 + 2#10 G
54. 27C, 4#10 + 2#10 G.
55. 41C, 6#10 + 2#10 G, 2#12 + #12 G
56. 21C, 2#10 + #10 G
57. 41C, 6#10 + 2#10 G
58. 21C, 2#12 + #12 G
59. 21C, 3#10 + #10 G
60. 41C, 8#10 + 3#10 G, 2#12 + #12 G
61. 27C, 3#10 + 2#10 G, 2#12 + #12 G
62. 41C, 6#10 + 3#10 G
63. 41C, 8#10 + 3#10 G
64. 41C, 6#10 + 2#10 G, 2#12 + #12 G (6)
65. 21C, 4#10 + #10 G (6)
66. 41C, 9#10 + 3#10 G (6)

GENERAL NOTES

1. Conduit routing is diagrammatic. Pull box locations shall be located as shown on plan drawings. The Contractor shall provide additional pull boxes as required. Exact locations of equipment and devices may be adjusted depending on field conditions or by the Engineer.
2. Minimum size of conduits shall be 21 mm. Exposed conduits shall be PVC coated rigid galvanized steel, and conduits located inside girder shall be rigid galvanized steel.
3. Conduit fittings for 78 mm conduits and larger shall have a 610 mm minimum bending radius.
4. All conduits, including spares, shall be provided with pull wires prior to cable installations.
5. All equipment and devices shall be provided with nameplate tags per drawings.
6. All feeders and branch circuits shall be provided with ground wire.
7. 15 kV splice boxes shall be installed as shown and permanently marked "DANGER-HIGH VOLTAGE-KEEP OUT". The letters shall be block type and at least 50 mm in height.
8. The Contractor shall label all conductors and cables per wiring diagrams.
9. Padlocks shall be installed on all cabinets located on the platforms to prevent unauthorized access.
10. Call boxes will be State-furnished. (The Contractor shall install and terminate conductors per wiring diagram.
11. Ladder type cable trays shall be installed for each 15 kV and 600 V systems.
12. Solid bottom cable trays shall be installed for each low level signals, CALTRANS communications, fiber optic systems, and for Non-Caltrans utilities.
13. For Strong Motion Detection System general notes, see sheet E-361.
14. All E sheets are accurate for electrical work only.
15. All dimensions are in millimeters unless otherwise shown.
16. All unused conductors inside pull boxes shall be taped and coiled.
17. "Similar" when shown on the plans means this detail is applicable to different structure and conduit sizes.
18. Electrical fixtures shall not be field welded to the box girders or crossbeams. All welding to the box girders and crossbeams shall be shown on the box girder and crossbeam shop drawings for review and approval by the Engineer.
19. All welding of electrical fixtures to the tower shall be shown on the tower shop drawings for review and approval by the Engineer.
20. All connections to steel elements of the self-anchored suspension bridge superstructure of electrical equipment and fixtures, including conduits, pull boxes, lighting fixtures, messenger cables and others, shall be shop welded or bolted. All connection details shall appear on the working drawings for review and approval by the Engineer.
21. Prior to ordering any cable tray support structures, the Contractor shall:
    - Refer to Structural sheets to determine the locations of cable tray support structures.
    - Determine, based upon field conditions, when and where to use cable tray vertical or horizontal bends, horizontal tees or reducers.
    - Refer to AS-sheets to determine the type of cable tray support to use based on field conditions.
    - Cable tray support structures shown on the AS-sheets are generic and may have to be adapted to suit field conditions.
    - All modifications to the cable tray support structures as shown on the AS-sheets shall be approved by the Resident Engineer.
22. All installation of electrical conduit, equipment or pull boxes shall be either shop welded or bolted.
23. All cable trays shall be securely anchored to support. Appropriate type of anchors (hold down brackets, hold down clamps or guides) shall be used to suit the cable tray type, location and supports. For similar attachment details, see TYPE I & II on E-122A and E-205A.
24. Contractor shall seal all wall penetrations with conduit within the dehumidified area using a rubber pipeseal that will expand to fill the gap between the penetration sleeve and conduit to create a seal. Caulking (silicone caulk) shall not be used at these locations.

ELECTRICAL NOTES AND ABBREVIATIONS

E-8

DIST	COUNTY	ROUTE	KILOMETER POST TOTAL PROJECT	SHEET No	TOTAL SHEETS
04	SF	80	13.2/13.9	93R6	1204

REGISTERED ELECTRICAL ENGINEER — 12/19/02 DATE

12-6-04
PLANS APPROVAL DATE

REGISTERED PROFESSIONAL ENGINEER — JENS ERLINGSSON No. 8249 Exp. 9/30/06 ELECTRICAL — STATE OF CALIFORNIA

PB POWER, Inc.
A Parsons Brinckerhoff Company
303 Second St., Suite 700N
San Francisco, CA 94107-1317

The State of California or its officers or agents shall not be responsible for the accuracy or completeness of electronic copies of this plan sheet.

Caltrans now has a web site! To get to the web site, go to http://www.dot.ca.gov

REGISTERED PROFESSIONAL ENGINEER — FADI WALIEDDINE No. 11465 Exp. 12/31/2009 ELECTRICAL — STATE OF CALIFORNIA
FOR REVISION ONLY 4 5 6

REGISTERED PROFESSIONAL ENGINEER — MAXWELL FUMIO TAKAKI No. E 8651 Exp. 9/30/2008 ELECTRICAL — STATE OF CALIFORNIA
FOR REVISION ONLY 1

REGISTERED PROFESSIONAL ENGINEER — S. A. ESTOQUE, JR. No. E-10151 Exp. 12/31/2008 ELECTRICAL — STATE OF CALIFORNIA
FOR REVISION ONLY 2 3

REQUEST FOR INFORMATION NOT ADDRESSED IN THIS CCO REMAIN IN FORCE

MARK	DATE	DESCRIPTIONS	BY	CH'D	CCO#
6	12/23/09	TOWER BASE MEP	RR TW	RG FW	79
5	12/11/09	TOWER UTILITY PANELS	JS TW	RG FW	70
4	10/10/08	LIGHTING REVISIONS	RY AG	RG FW	43
3	09/24/08	CABLE ELECTRICAL	RR AG	RG SE	72
2	02/25/08	CABLE TRAY CHANGES	RG	SE	42S1
1	02/19/08	ELECTRICAL MODIFICATIONS	MP EL	RR	42

REVISIONS

CONTRACT CHANGE ORDER NO. 79
SHEET 3 OF 18

DESIGN OVERSIGHT	BEHZAD GOLEMOHAMMADI	CALCULATED/DESIGNED BY	AB
		CHECKED BY	JW
		REVISED BY	IAH
		DATE REVISED	3/04

STATE OF CALIFORNIA - DEPARTMENT OF TRANSPORTATION — Caltrans

LAST REVISION 00-00-00 — DATE PLOTTED => 12/23/2009 TIME PLOTTED => 12:16:28 PM

FOR REDUCED PLANS ORIGINAL SCALE IS IN MILLIMETERS 0 20 40 60 80

DGN FILE =>t:\13103\ms\pse\SAS Struc\CCO\SAS CC079\2009-12-23_Issued for Submittal\04-0120F1_0093R06.dgn
USERNAME =>llorico

CU 04251 | EA 0120F1

DIST	COUNTY	ROUTE	KILOMETER POST TOTAL PROJECT	SHEET No	TOTAL SHEETS
04	SF	80	13.2/13.9	142 R6	1204

REGISTERED ELECTRICAL ENGINEER 12/19/02 DATE

12-6-04
PLANS APPROVAL DATE

REGISTERED PROFESSIONAL ENGINEER JENS ERLINGSSON No. 8249 Exp. 9/30/06 ELECTRICAL STATE OF CALIFORNIA

PB POWER, Inc.
A Parsons Brinckerhoff Company
303 Second St., Suite 700N
San Francisco, CA 94107-1317

The State of California or its officers or agents shall not be responsible for the accuracy or completeness of electronic copies of this plan sheet.

Caltrans now has a web site! To get to the web site, go to http://www.dot.ca.gov

Caltrans Metric

PULL BOXES

Location	Type	Pull Box Size	Enclosure Type	Nameplate Pull Box Cover	Remarks
Roadway Barrier	PB-Com			Low Voltage - Call Box	Caltrans standard ES-9C (PB-9A)
Roadway Barrier	PB-Ltg			600 V - Electrical	Caltrans standard ES-9C (PB-9)
Roadway and miscellaneous	PB-1B	304 L x 254 W x 127 D	NEMA 4X	600 V - Electrical	Located at main suspender cable
Roadway and miscellaneous	PB-1C	152 L x 152 W x 102 D	NEMA 4X	600 V - Electrical	Located at suspender brackets
Roadway	PB-1F	304 L x 304 W x 152 D	NEMA 4X	600 V - Electrical	Located at main suspender cable
Inside Girder Box	PB-2A	406 L x 254 W x 152 D	NEMA 12	600 V - Electrical	
Service Platform	PB-2B	762 L x 508 W x 203 D	NEMA 4X	600 V - Electrical	
Inside Girder Box	PB-2C	915 L x 610 W x 610 D	NEMA 12	600 V - Electrical	Electrical vault-embedded in conc. deck
Inside Girder Box	PB-2P	1067 L x 915 W x 305 D	NEMA 12	600 V - Electrical	Electrical vault-surface/pendant mounted
Inside Girder Box	PB-2L	152 L x 152 W x 102 D	NEMA 12	600 V - Electrical	For future light pipe and inside Piers E6W, E7W, and E8W.

PULL BOXES

Location	Type	Pull Box Size	Enclosure Type	Nameplate Pull Box Cover	Remarks
"E" Line Girder access Platform	PB-2D	457 L x 457 W x 203 D	NEMA 4X	600 V - Electrical	For Base Tower power and lighting
Inside Dehumidification #2 Area	PB-2E	203 L x 203 W x 102 D	NEMA 12	600 V - Electrical	For Base Tower Dehumidification #2 power
~~Tower Base-Elevator Enclosure~~ 6 Tower Base Lighting EL.3.0 m, 9.0 m	PB-2F	203 L x 203 W x 102 D	NEMA 12	600 V - Electrical	~~For Elevator pit motor power~~ For Lighting at EL. 3.0 m, EL. 9.0 m 6
Tower Walkway Platform, EL. 93.35 m	PB-2H	457 L x 457 W x 203 D	NEMA 4X	600 V - Electrical	For Power and Lighting
Elevator Enclosure-EL. 93.35 m	PB-2J	203 L x 203 W x 102 D	NEMA 4X	600 V - Electrical	For Power and Lighting
"E" Line Girder access Platform	PB-2K	305 L x 305 W x 152 D	NEMA 4X	600 V - Electrical	For Base Tower power and lighting
Tower Walkway Platform, EL. 53.0 m EL. 89.85 m, EL.127 m, EL. 139.85 m, EL. 156.75 m	PB-2R	203 L x 203 W x 102 D	NEMA 4X	600 V - Electrical	For Power - Booster Pump P1 at EL. 53.00 m & For Lighting at EL. 89.85 m, EL. 127.00 m, EL. 139.85 m, EL. 156.75 m
Tower Head Elev 158.00 m	PB-2S	762 L x 610 W x 305 D	NEMA 4X	600 V - Electrical	For Dehumidifier Unit #5 Power and Communications
Tower Elevation 53.85 m	PB-4E	914 L x 762 W x 406 D	NEMA 4X	600 V - Electrical	For Tower Power
Tower Shaft Lighting	PB-4H	305 L x 305 W x 152 D	NEMA 12	600 V - Electrical	For Tower shaft Ladder Lighting
Tower Shaft Lighting	PB-4J	406 L x 305 W x 152 D	NEMA 12	600 V - Electrical	For Tower shaft Ladder Lighting
Tower Shaft Lighting	PB-4K	508 L x 406 W x 152 D	NEMA 12	600 V - Electrical	For Tower shaft Ladder Lighting

(2)

SPLICE BOXES

Location	Type	Splice Box Size	Enclosure Type	Nameplate Splice Box Cover	Remarks
Inside Girder Box and Tower EL 63.0	PB-3A	1830 L x 915 W x 305 D	NEMA 12	Danger - High Voltage - Keep Out	
Inside Girder Box	PB-3B	813 L x 203 diameter	Cylindrical Housing	Fiber Optic	72 fibers to 12 fibers
Inside Girder Box	PB-3C	813 L x 203 diameter	Cylindrical Housing	Fiber Optic	72 fibers to 72 fibers

PANEL ENCLOSURES (1)

Location	Type	Cabinet/Terminal Box Size	Enclosure Type	Nameplate Cabinet/Terminal Cover	Remarks
Service Platform	PB-6C	See Panel Layout	NEMA 4X	See Panel Layout on E-305	For Navigation Relay Cabinet
Service Platform	PB-7B	See Panel Layout	NEMA 4X	See Panel Layout on E-321	For Scada Communication Terminal Box
Service Platform	PB-7C	762 H x 508 W x 203 D	NEMA 4X	Caltrans Telephone	Enclosure only - For Telephone Terminal Box
Inside Girder Box	PB-7D	508 H x 406 W x 203 D	NEMA 4X	Caltrans Telephone	Enclosure only - For Telephone Terminal Box

SAS SUPERSTRUCTURE WB

Location	Type	Pull Box Size	Enclosure Type	Nameplate Pull Box Cover	Remarks
Inside Light Pole	PB-2N	152 L x 152 W x 102 D	NEMA 12	TOS-MVDS	Cable Termination
Tower Platform	PB-2M	305 L x 305 W x 152 D	NEMA 12	TOS-MVDS	Cable Termination
Inside Dehumidification #1 Area	PB-TOS	203 L x 203 W x 102 D	NEMA 4X	TOS-COM	Dehumidification Unit #1

SHEET NOTES:

(1) Panel enclosures shall be provided with padlock provisions.

(2) See sheets E-284 and E-284A for locations of pull boxes.

REGISTERED PROFESSIONAL ENGINEER SYN YEE CHIN No. 18186 Exp. 09/30/2011 ELECTRICAL STATE OF CALIFORNIA

Syn Yee Chin
FOR REVISION ONLY
5 6

REGISTERED PROFESSIONAL ENGINEER MARCELL FUMIO TAKAKI No. E 8651 Exp. 9/30/2008 ELECTRICAL STATE OF CALIFORNIA

FOR REVISION ONLY
1

REGISTERED PROFESSIONAL ENGINEER FADI WALI EDDINE No. 11465 Exp. 12/31/2009 ELECTRICAL STATE OF CALIFORNIA

FOR REVISION ONLY
2 3 4

REQUEST FOR INFORMATION NOT ADDRESSED IN THIS CCO REMAIN IN FORCE

MARK	DATE	DESCRIPTIONS	BY	CH'D	CCO#
6	02/26/10	TOWER BASE MEP	RR	RG SYC	79
5	02/24/10	TOWER UTILITY PANELS	RB	RG SYC	70
4	08/03/09	ELECTRICAL WARNING SYSTEMS	RG	FW	61
3	03/30/09	SERVICE PLATFORM ELECTRICAL CHANGES	RR	RG FW	55
2	09/24/08	CABLE ELECTRICAL	RY AG	RG FW	72
1	02/19/08	ELECTRICAL MODIFICATIONS	MP EL	RR	42

REVISIONS

CONTRACT CHANGE ORDER NO. 79
SHEET 4 OF 18

DETAILS
SAS SUPERSTRUCTURE ROADWAY WESTBOUND PULLBOX SCHEDULES

E-83

STATE OF CALIFORNIA - DEPARTMENT OF TRANSPORTATION
Caltrans

DESIGN OVERSIGHT: BEHZAD GOLEMOHAMMADI

CALCULATED/DESIGNED BY: FK | DATE 10/01 | REVISED BY
CHECKED BY: BL | 11/01 | DATE REVISED

LAST REVISION 00-00-00 | DATE PLOTTED => 2/25/2010 | TIME PLOTTED => 5:12:41 PM

FOR REDUCED PLANS ORIGINAL SCALE IS IN MILLIMETERS 0 20 40 60 80

DGN FILE =>t:\13103\ms\pse\SAS Struc\CCO\SAS CC079\2009-12-23_Issued for Submittal\04-0120f1_0142R06.dgn
USERNAME =>llorico

CU 04251 | EA 0120F1

DIST	COUNTY	ROUTE	KILOMETER POST TOTAL PROJECT	SHEET No.	TOTAL SHEETS
04	SF	80	13.2/13.9	262 R2	1204

REGISTERED ELECTRICAL ENGINEER 12/19/02 DATE

12-6-04
PLANS APPROVAL DATE

REGISTERED PROFESSIONAL ENGINEER JENS ERLINGSSON No. 8249 Exp. 9/30/06 ELECTRICAL STATE OF CALIFORNIA

PB POWER, Inc.
A Parsons Brinckerhoff Company
303 Second St., Suite 700N
San Francisco, CA 94107-1317

The State of California or its officers or agents shall not be responsible for the accuracy or completeness of electronic copies of this plan sheet.

Caltrans now has a web site! To get to the web site, go to http://www.dot.ca.gov

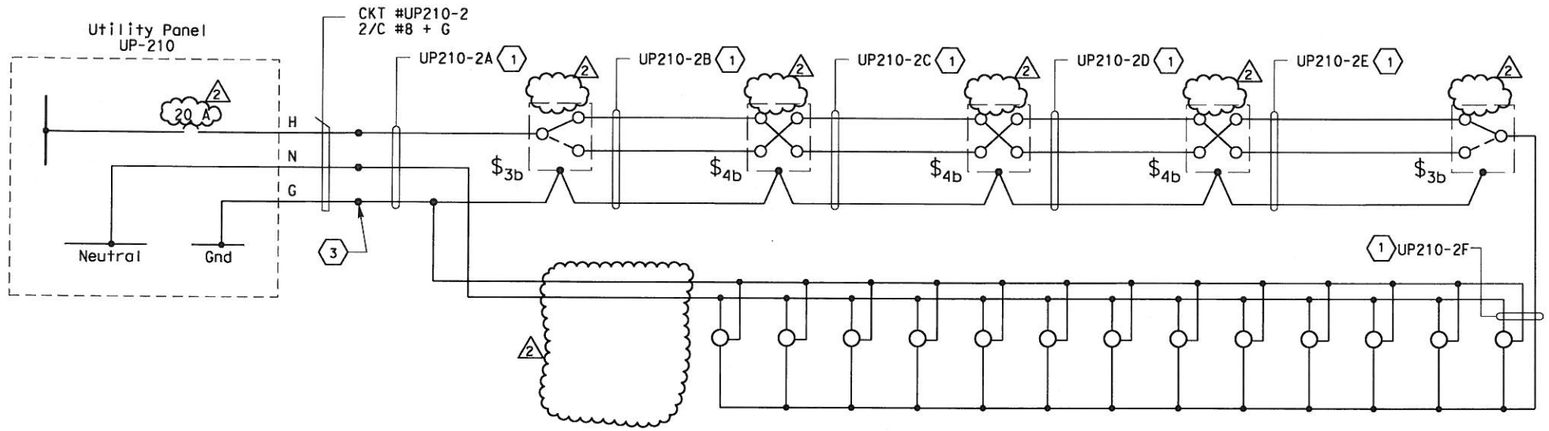

120 V TOWER BASE LIGHTING AT EL 9.0 m

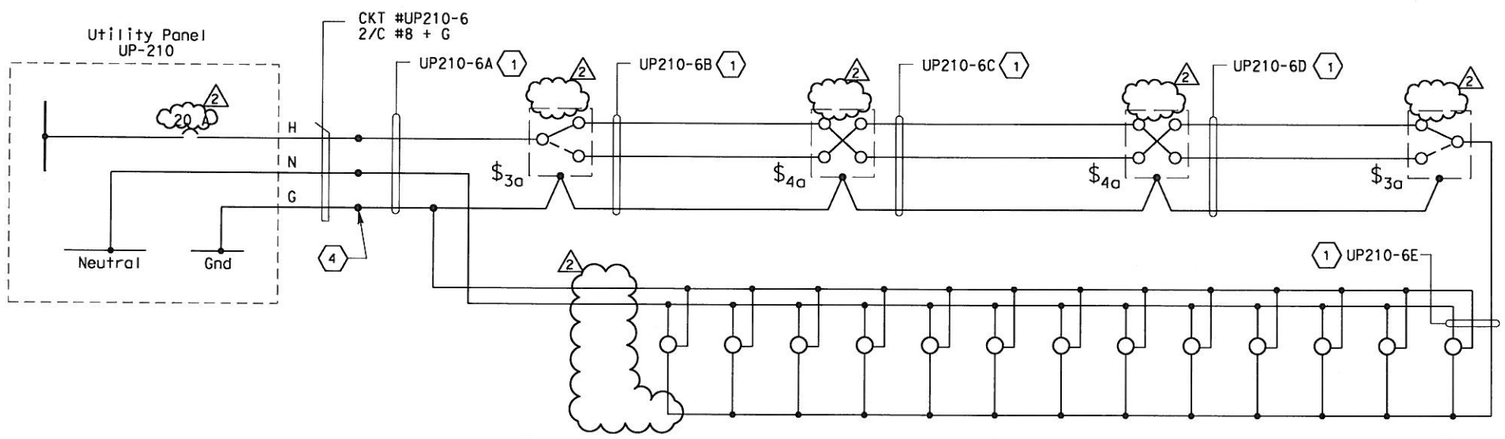

120V TOWER BASE LIGHTING AT EL 9.0 m

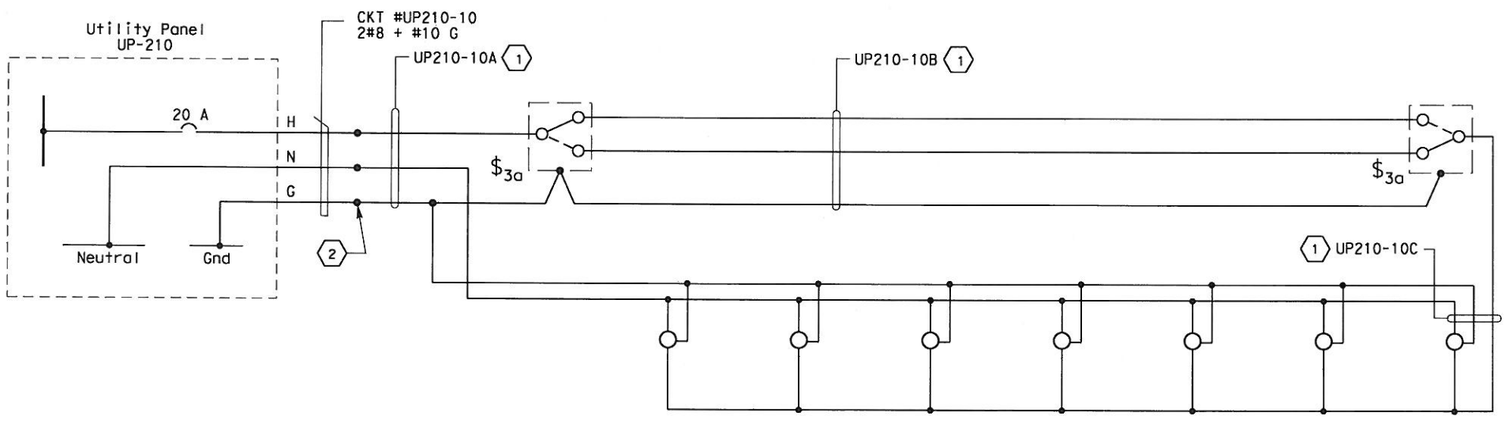

120V TOWER PLATFORM LIGHTING AT EL 53.85 m

REGISTERED PROFESSIONAL ENGINEER SYN YEE CHIN No. 18186 Exp. 09/30/2013 ELECTRICAL STATE OF CALIFORNIA

Syn Yee Chin
FOR REVISION ONLY
2

SHEET NOTES:

1. #10 AWG single conductors.
2. Conductors spliced inside pull box (PB-4K) located on Elev. 53.85 m.
3. Conductors spliced inside pull box (PB-4J) located in SW shaft at Elev. 9.0 m.
4. Conductors spliced inside pull box (PB-4J) located in SE shaft at Elev. 9.0 m.

NOTES:

1. References:
   - For utility panel schedule, see Sheet E-278.
   - For conduit and cable tray schedules, see sheets starting at E-401.
2. Refer to Tower Power and Lighting Plans E-264B, E-265 and E-266 for light switch locations. Light switches are rated 20A unless noted otherwise.

TABLE 1

Location At Tower Grating Elevation	Lighting At Tower Diaphragm CKT. Number	3-Way Switches CKT. Number	4-Way Switches CKT. Number	Receptacle CKT. Number
Elev 9.0m	UP210-2	UP210-2	UP210-2	UP210-4
	UP210-6	UP210-6	UP210-6	UP210-8
	UP210-13			UP210-26
	UP210-14			
	UP210-15			
	UP210-16			
Elev 53.85m	UP210-10	UP210-10		UP210-11

REGISTERED PROFESSIONAL ENGINEER FADI WALIEDDINE No. 11465 Exp. 12/31/2009 ELECTRICAL STATE OF CALIFORNIA

1
FOR REVISION ONLY

REQUEST FOR INFORMATION NOT ADDRESSED IN THIS CCO REMAIN IN FORCE

MARK	DATE	DESCRIPTIONS	BY	CH'D	CCO#
2	06/20/12	TOWER BASE MEP	TW	RG	79
1	12/23/09	TOWER BASE MEP	RR AWG	RG FW	79

REVISIONS

CONTRACT CHANGE ORDER NO. 79
SHEET 5 OF 18

DETAILS
TOWER AND SUSPENSION CABLE 120 V LIGHTING WIRING DIAGRAM
NO SCALE

E-252

DATE	REVISED BY	DATE REVISED
10/01	FK	11/01

CALCULATED/DESIGNED BY FK
CHECKED BY EDC

DESIGN OVERSIGHT
BEHZAD GOLEMOHAMMADI

STATE OF CALIFORNIA - DEPARTMENT OF TRANSPORTATION
Caltrans

LAST REVISION 05-18-12
DATE PLOTTED => 6/21/2012
TIME PLOTTED => 10:34:54 AM

FOR REDUCED PLANS ORIGINAL SCALE IS IN MILLIMETERS 0 20 40 60 80
DGN FILE =>04-0120F1_0262R02.dgn
USERNAME =>KoonC
CU 04251
EA 0120F1

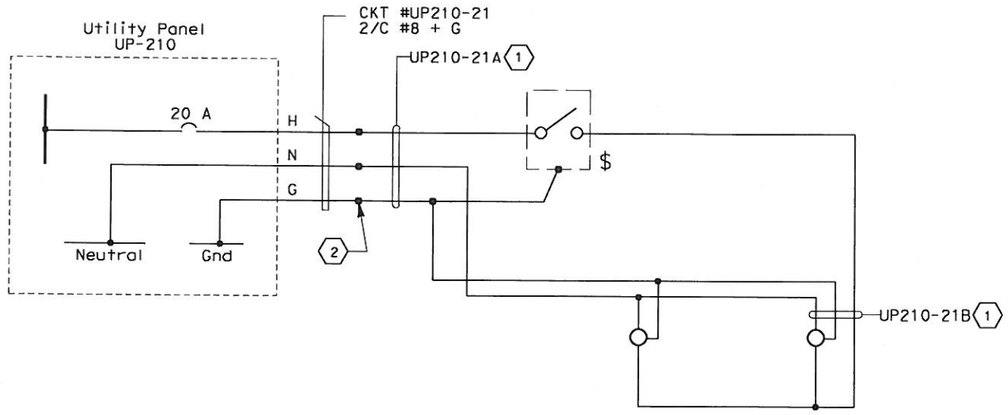

120 V TOWER BASE LIGHTING AT EL 3.0 m

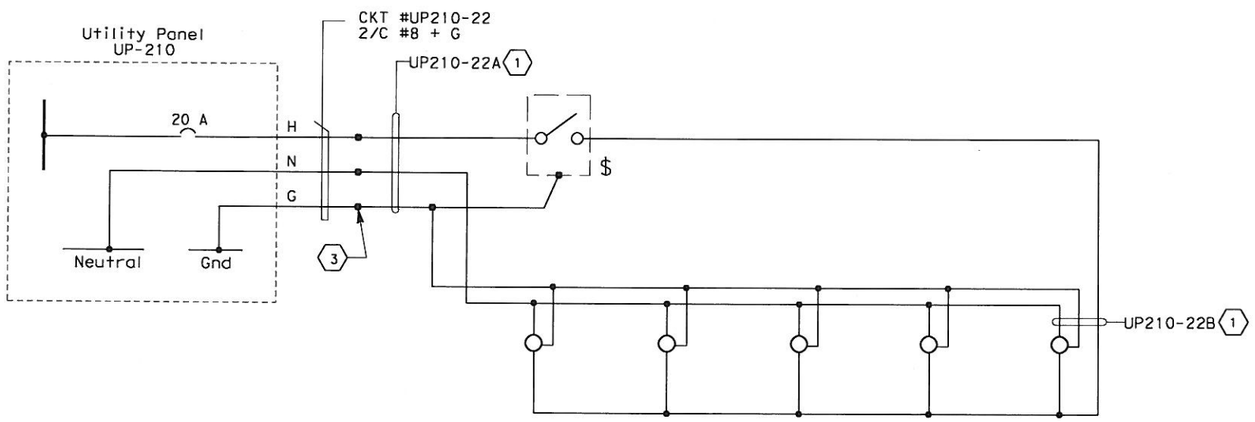

120V TOWER BASE LIGHTING AT EL 3.0 m

TABLE 1			
Location At Tower Grating Elevation	Lighting Panel CKT. Number	Single Pole Switch CKT. Number	Receptacle CKT. Number
Elev 3.0	UP210-21		UP210-23
	UP210-22		UP210-24
Elev 9.0		UP210-21	
		UP210-22	

Caltrans Metric

DIST	COUNTY	ROUTE	KILOMETER POST TOTAL PROJECT	SHEET No	TOTAL SHEETS
04	SF	80	13.2/13.9	262 S1	1204

REGISTERED ELECTRICAL ENGINEER 11/26/08 DATE

PLANS APPROVAL DATE

REGISTERED PROFESSIONAL ENGINEER FADI WALIEDDINE No. 11465 Exp. 12/31/2009 ELECTRICAL STATE OF CALIFORNIA

PB POWER, Inc.
A Parsons Brinckerhoff Company
303 Second St., Suite 700N
San Francisco, CA 94107-1317

The State of California or its officers or agents shall not be responsible for the accuracy or completeness of electronic copies of this plan sheet.

Caltrans now has a web site! To get to the web site, go to http://www.dot.ca.gov

SHEET NOTES:

1. #10 AWG single conductors.
2. Conductors spliced inside pull box (PB-4H) located in SW shaft at el 3.0 m.
3. Conductors spliced inside pull box (PB-4H) located in SE shaft at el 3.0 m.

NOTES:

1. References:
   - For utility panel schedule, see Sheet E-278.
   - For conduit and cable tray schedules, see sheets starting at E-401.
2. Refer to Tower Power and Lighting Plans E-266A,

REQUEST FOR INFORMATION NOT ADDRESSED IN THIS CCO REMAIN IN FORCE

MARK	DATE	DESCRIPTIONS	BY	CH'D	CCO#
0	12/23/09	TOWER BASE MEP	RM AWG	RG FW	79

REVISIONS

CONTRACT CHANGE ORDER NO. 79
SHEET 6 OF 18

DETAILS
TOWER AND SUSPENSION CABLE 120 V LIGHTING WIRING DIAGRAM
NO SCALE

E-252A

DATE	REVISED BY	DATE REVISED

CALCULATED/DESIGNED BY | CHECKED BY

DESIGN OVERSIGHT
BEHZAD GOLEMOHAMMADI

STATE OF CALIFORNIA - DEPARTMENT OF TRANSPORTATION
Caltrans

LAST REVISION 00-00-00 | DATE PLOTTED => 12/23/2009 | TIME PLOTTED => 12:17:14 PM

FOR REDUCED PLANS ORIGINAL SCALE IS IN MILLIMETERS 0 20 40 60 80

DGN FILE =>t:\13103\ms\pse\SAS Struc\CCO\SAS CCO79\2009-12-23_Issued for Submittal\04-0120f1_0262S01.dgn
USERNAME =>llorico

CU 04251 | EA 0120F1

DIST	COUNTY	ROUTE	KILOMETER POST TOTAL PROJECT	SHEET No	TOTAL SHEETS
04	SF	80	13.2/13.9	272 R2	1204

REGISTERED ELECTRICAL ENGINEER 12/19/02 DATE

12-6-04
PLANS APPROVAL DATE

REGISTERED PROFESSIONAL ENGINEER JENS ERLINGSSON No. 8249 Exp. 9/30/06 ELECTRICAL STATE OF CALIFORNIA

PB POWER, Inc.
A Parsons Brinckerhoff Company
303 Second St., Suite 700N
San Francisco, CA 94107-1317

The State of California or its officers or agents shall not be responsible for the accuracy or completeness of electronic copies of this plan sheet.

Caltrans now has a web site! To get to the web site, go to http://www.dot.ca.gov

Caltrans Metric

REGISTERED PROFESSIONAL ENGINEER MARCELL FUMIO TAKATA No. E 8651 Exp. 9/30/2008 ELECTRICAL STATE OF CALIFORNIA

FOR REVISION ONLY (1)

REGISTERED PROFESSIONAL ENGINEER FADI WALIEDDINE No. 11465 Exp. 12/31/2009 ELECTRICAL STATE OF CALIFORNIA

FOR REVISION ONLY (2)

REQUEST FOR INFORMATION NOT ADDRESSED IN THIS CCO REMAIN IN FORCE

MARK	DATE	DESCRIPTIONS	BY	CH'D	CCO#
2	12/23/09	TOWER BASE MEP	TW	RG FW	79
1	02/19/08	ELECTRICAL MODIFICATIONS	MP EL	RR	42

REVISIONS

CONTRACT CHANGE ORDER NO. 79
SHEET 7 OF 18

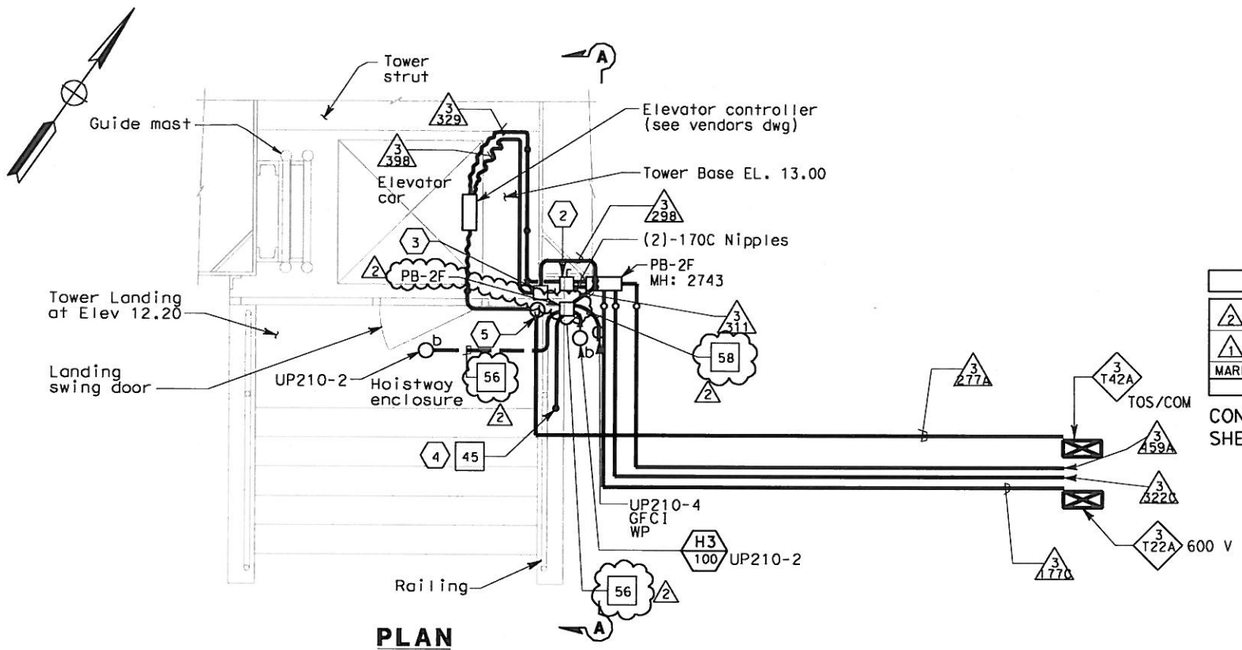

PLAN
TOWER BASE ELEVATOR ENCLOSURE
SCALE 1:20

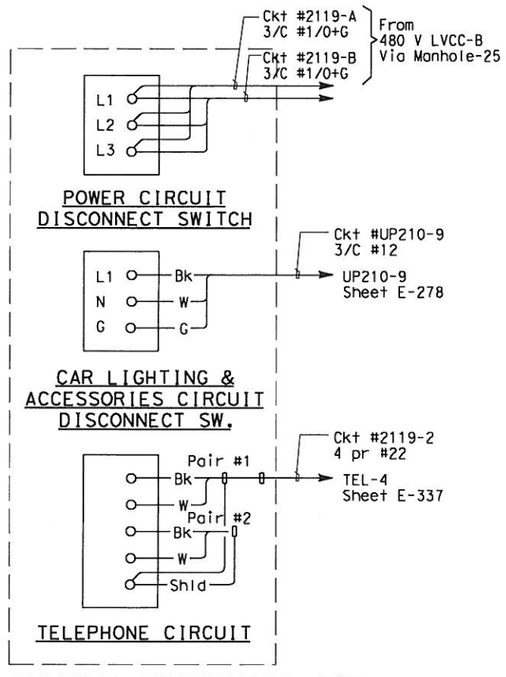

MAIN TOWER ELEVATOR PIT CONNECTION DIAGRAM

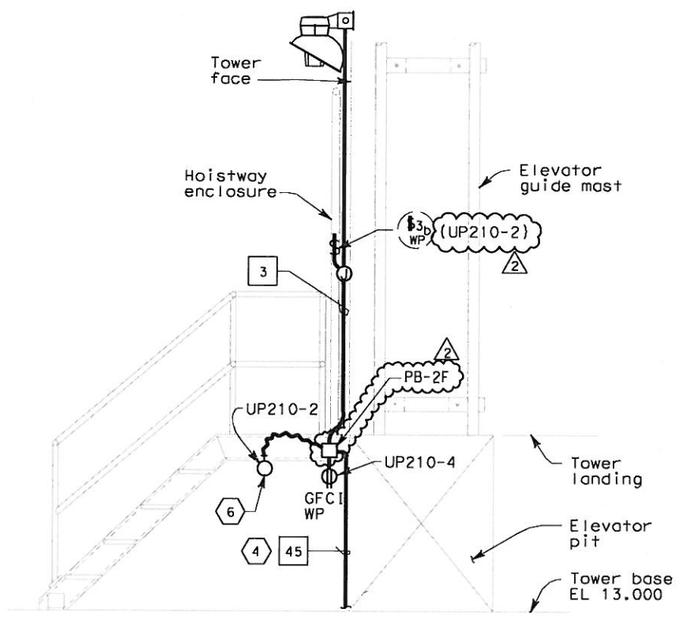

SECTION A-A
SCALE 1:20

THIS PLAN ACCURATE FOR ELECTRICAL WORK ONLY.

ALL DIMENSIONS ARE IN MILLIMETERS UNLESS OTHERWISE SHOWN.

SHEET NOTES:

1. Deleted.
2. 480 V, 3 Ø, 100 A, non-fused disconnect switch for elevator pit motor. Use liquid tight flexible conduit from disconnect switch to the motor.
3. 120 V single pole single throw disconnect switch for elevator lighting and fan.
4. Down to elevation 9.0 m. See sheet E-266.
5. PB-TOS for telephone communication lines.
6. Elevator pit light fixture shall be located a maximum of 450 mm from access ladder and 915 mm above lowest landing.
7. For lighting and receptacles in this area, see sheet E-266.

NOTES:

1. References:
   - For utility panel UP-210 schedule, see sheet E-278.
   - For types of pull boxes, splice boxes and enclosures, see sheets E-83 and E-169.
   - For conduit and cable tray schedules, see sheets starting at E-401.
   - For lighting fixture schedule, see sheet E-273.
   - For typical lighting installation details, see sheet E-267.
   - For typical conduit installation details, see sheet E-268.
2. Electrical conduits shall enter the tower shafts between stiffeners A3 and A4 only. For conduit entry details, see Structural Utility drawings
3. Fixture mounting height elevation shall be 2.4 m above floor/platform elevation UNO.
4. All conduits and fittings routed exposed at grating shall be rigid galvanized steel, PVC coated.
5. For other related work not shown on this sheet, see Electrical Special Provisions.

DETAILS
TOWER AND SUSPENSION CABLE
TOWER POWER AND LIGHTING
SCALE AS NOTED

E-265

STATE OF CALIFORNIA - DEPARTMENT OF TRANSPORTATION
Caltrans

DESIGN OVERSIGHT: BEHZAD GOLEMOHAMMADI

CALCULATED/DESIGNED BY: FK | DATE 10/01 | REVISED BY
CHECKED BY: EDC | 11/01 | DATE REVISED

LAST REVISION 00-00-00
DATE PLOTTED => 12/23/2009
TIME PLOTTED => 12:17:42 PM

FOR REDUCED PLANS ORIGINAL SCALE IS IN MILLIMETERS 0 20 40 60 80

DGN FILE =>t:\13103\ms\pse\SAS Struc\CCO\SAS CC079\2009-12-23_Issued for Submittal\04-0120F1_0272R02.dgn
USERNAME =>llorico

CU 04251 | EA 0120F1

DIST	COUNTY	ROUTE	KILOMETER POST TOTAL PROJECT	SHEET No	TOTAL SHEETS
04	SF	80	13.2/13.9	273 R4	1204

REGISTERED ELECTRICAL ENGINEER 12/19/02 DATE

12-6-04
PLANS APPROVAL DATE

REGISTERED PROFESSIONAL ENGINEER JENS ERLINGSSON No. 8249 Exp. 9/30/06 ELECTRICAL STATE OF CALIFORNIA

PB POWER, Inc.
A Parsons Brinckerhoff Company
303 Second St., Suite 700N
San Francisco, CA 94107-1317

The State of California or its officers or agents shall not be responsible for the accuracy or completeness of electronic copies of this plan sheet.

Caltrans now has a web site! To get to the web site, go to http://www.dot.ca.gov

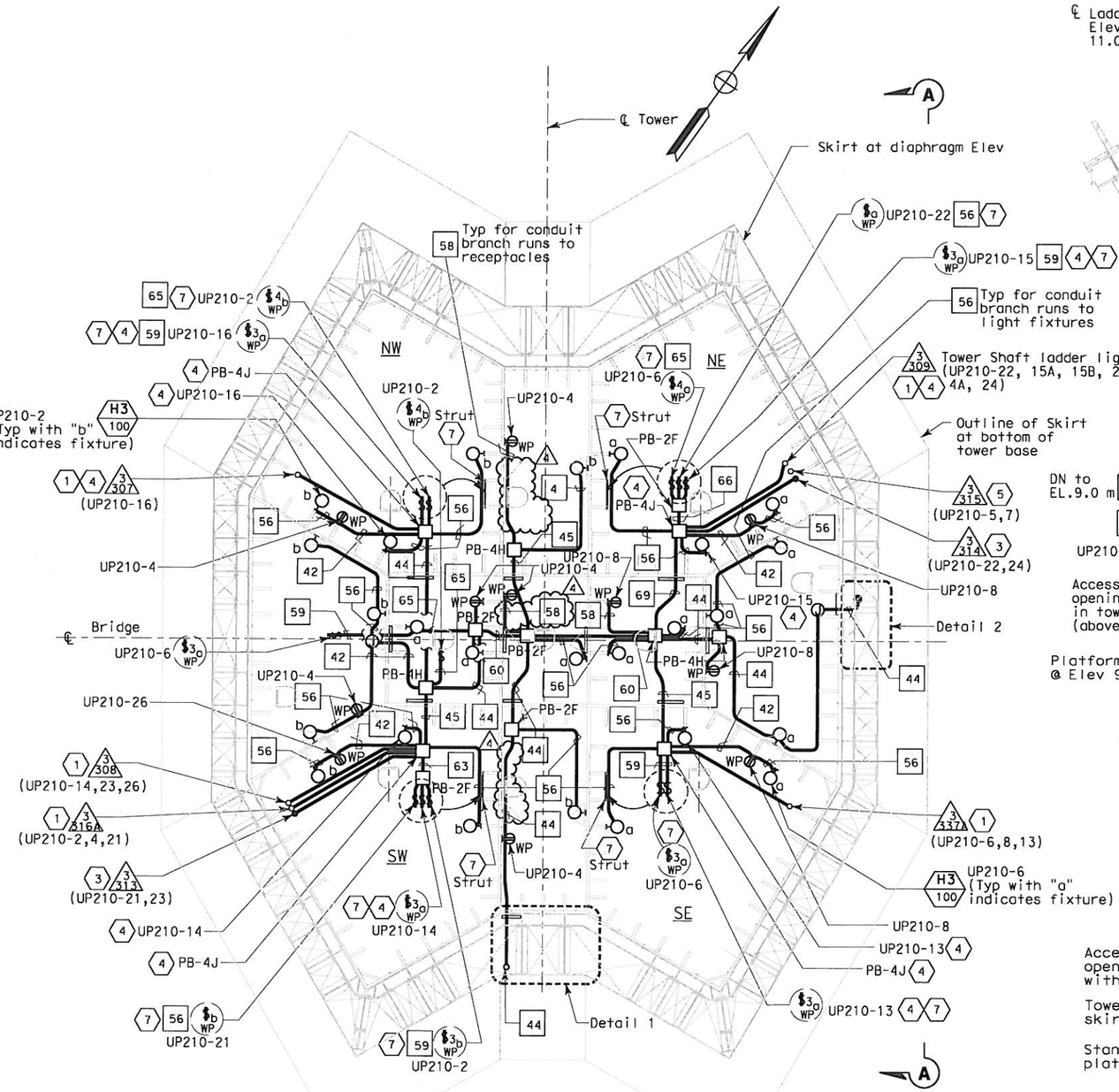

PLAN AT ELEV 9.0 m
SCALE 1:80

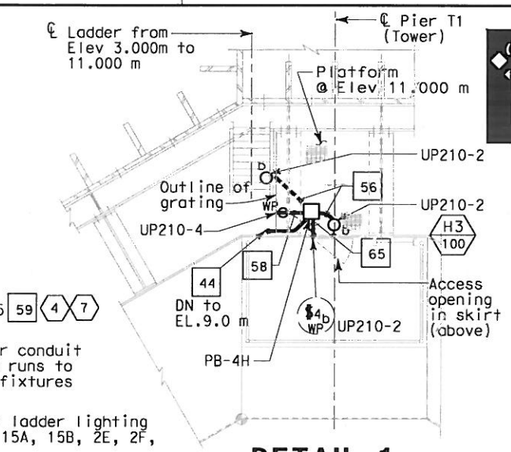

DETAIL 1
SCALE 1:40
(PARTIAL PLAN AT ELEV 11.000 m)

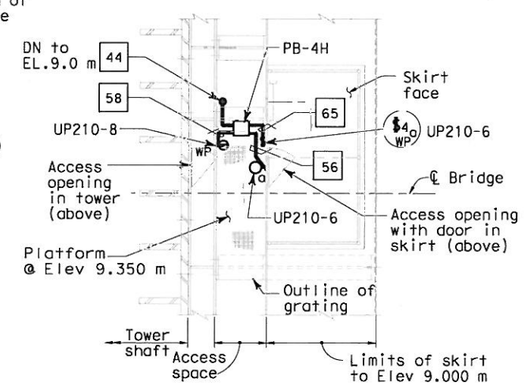

DETAIL 2
SCALE 1:40
(PARTIAL PLAN AT ELEV 9.350 m)

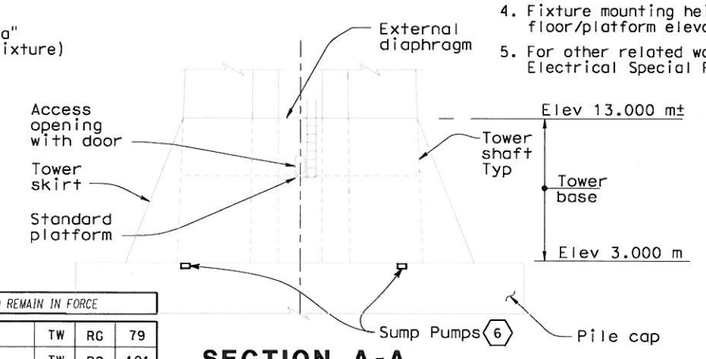

SECTION A-A
1:200

SHEET NOTES:

(1) Up to 600V cable tray at Elevation 13m, see sheet E-266A.

(2)

(3) For continuation down, see sheet E-266A.

(4) For ladder platform lighting inside tower shafts, see E-275A and E-284.

(5) Elev 3.0 lighting and power conduits up to cable tray 3T22A @ Elev 13m, see sheet E-266A.

(6) For sump pumps conduit installation details, see sheets E-266A and E-267.

(7) Locate light switches to stiffeners as indicated. For installation detail, see Detail 1 on sheet E-266A.

NOTES:

1. References:
   - For utility panel UP-210 schedule, see sheet E-278.
   - For types of pull boxes, splice boxes and enclosures, see sheets E-83 and E-169.
   - For conduit and cable tray schedule, see sheets starting at E-401.
   - For lighting installation details, see sheet E-267.
   - For lighting fixture schedule, see sheet E-273.
   - For typical conduit installation details, see sheet E-268.
2. All conduits and fittings routed exposed at grating shall be rigid galvanized steel, PVC coated.
3. Electrical conduits shall enter the tower shafts between stiffeners A3 and A4 only. For conduit entry details, see Structral Utility drawings.
4. Fixture mounting height elevation shall be 2.4 m above floor/platform elevation UNO.
5. For other related work not shown on this sheet, see Electrical Special Provisions.

REGISTERED PROFESSIONAL ENGINEER SYN YEE CHIN No. 18186 Exp. 09/30/2013 ELECTRICAL STATE OF CALIFORNIA

FOR REVISION ONLY (3)(4)

REGISTERED PROFESSIONAL ENGINEER MAXWELL FUMIO TAKATA No. E 8651 Exp. 9/30/2008 ELECTRICAL STATE OF CALIFORNIA

FOR REVISION ONLY (1)

REGISTERED PROFESSIONAL ENGINEER FADI WALIEDDINE No. 11465 Exp. 12/31/2009 ELECTRICAL STATE OF CALIFORNIA

FOR REVISION ONLY (2)

THIS PLAN ACCURATE FOR ELECTRICAL WORK ONLY.

REQUEST FOR INFORMATION NOT ADDRESSED IN THIS CCO REMAIN IN FORCE

MARK	DATE	DESCRIPTIONS	BY	CH'D	CCO#
4	06/25/12	TOWER BASE MEP	TW	RG	79
3	05/25/12	SAS/SKYWAY MISCELLANEOUS ELECTRICAL CHANGES	TW	RG	191
2	12/23/09	TOWER BASE MEP	RM AWG RR	RG FW	79
1	02/19/08	ELECTRICAL MODIFICATIONS	MP EL	RR	42

REVISIONS

CONTRACT CHANGE ORDER NO. 79
SHEET 8 OF 18

ALL DIMENSIONS ARE IN MILLIMETERS UNLESS OTHERWISE SHOWN.

DETAILS
TOWER AND SUSPENSION CABLE TOWER POWER AND LIGHTING
SCALE AS NOTED

E-266

CALCULATED/ DESIGNED BY	FK
CHECKED BY	EDC
REVISED BY	AB
DATE REVISED	2/04
DATE	10/01
DATE	11/01

DESIGN OVERSIGHT: BEHZAD GOLEMOHAMMADI

STATE OF CALIFORNIA - DEPARTMENT OF TRANSPORTATION

Caltrans

FOR REDUCED PLANS ORIGINAL SCALE IS IN MILLIMETERS 0 20 40 60 80

DGN FILE =>T:\13103\MS\pse\SAS Struc\CCO\SAS CC079\2012-06-25_Issued for Submittal (Draft 6)\04-0120F1_0273R04.dgn
USERNAME =>garciar

CU 04251 | EA 0120F1

LAST REVISION 05-18-12
DATE PLOTTED => 6/25/2012
TIME PLOTTED => 8:22:36 AM

DIST	COUNTY	ROUTE	KILOMETER POST TOTAL PROJECT	SHEET No	TOTAL SHEETS
04	SF	80	13.2/13.9	273 S1	1204

REGISTERED ELECTRICAL ENGINEER 11/26/08 DATE

PLANS APPROVAL DATE

REGISTERED PROFESSIONAL ENGINEER FADI WALIEDDINE No. 11465 Exp. 12/31/2009 ELECTRICAL STATE OF CALIFORNIA

PB AMERICAS, Inc.
A Parsons Brinckerhoff Company
303 Second St., Suite 700N
San Francisco, CA 94107-1317

The State of California or its officers or agents shall not be responsible for the accuracy or completeness of electronic copies of this plan sheet.

Caltrans now has a web site! To get to the web site, go to http://www.dot.ca.gov

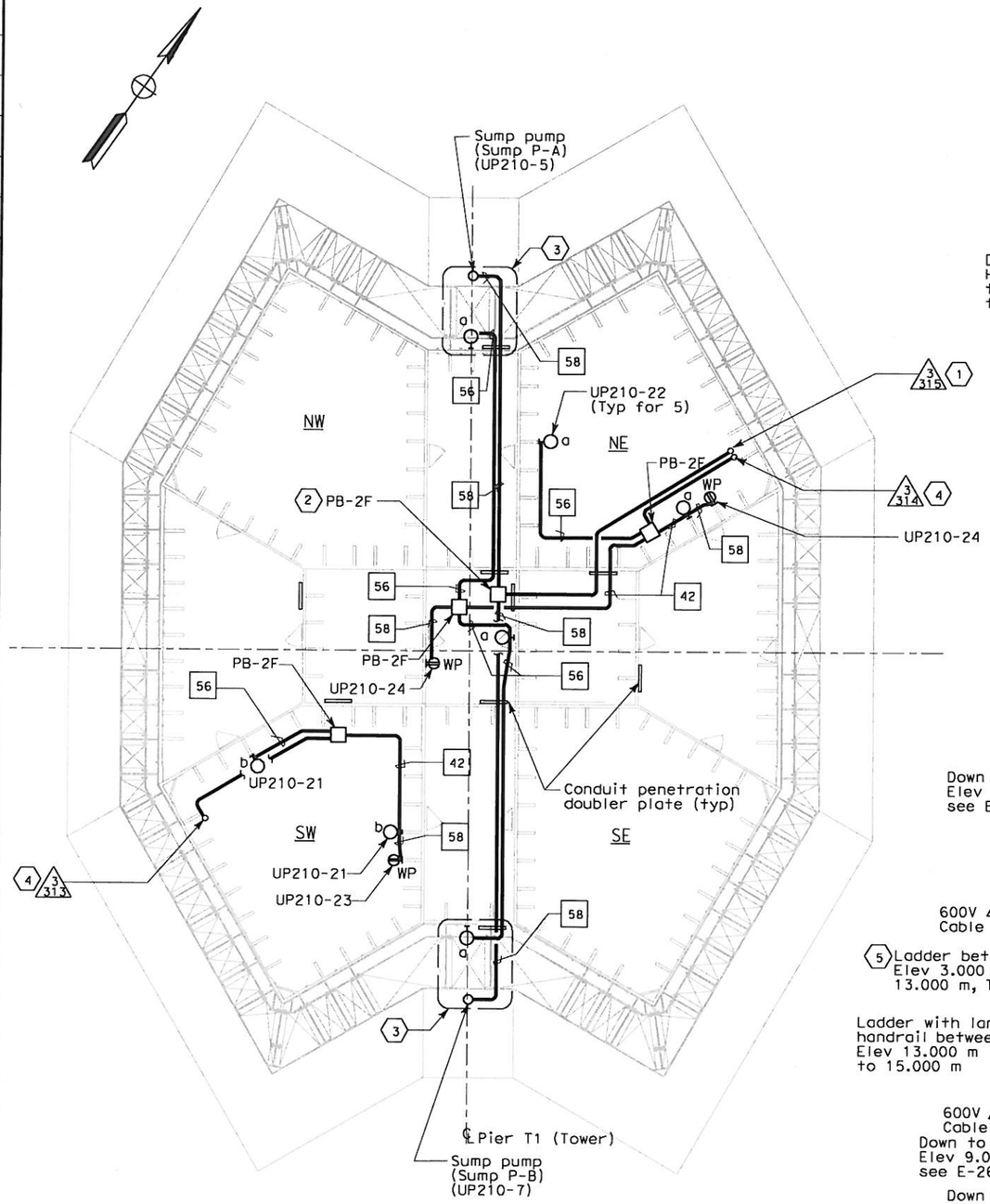

PLAN AT ELEV 3.0 m

SCALE 1:80

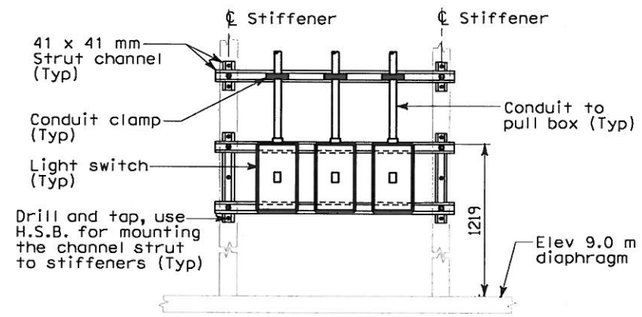

DETAIL 1

NO SCALE

(6) (TYPICAL INSTALLATION OF MULTIPLE LIGHT SWITCH ON VERTICAL STIFFENERS)

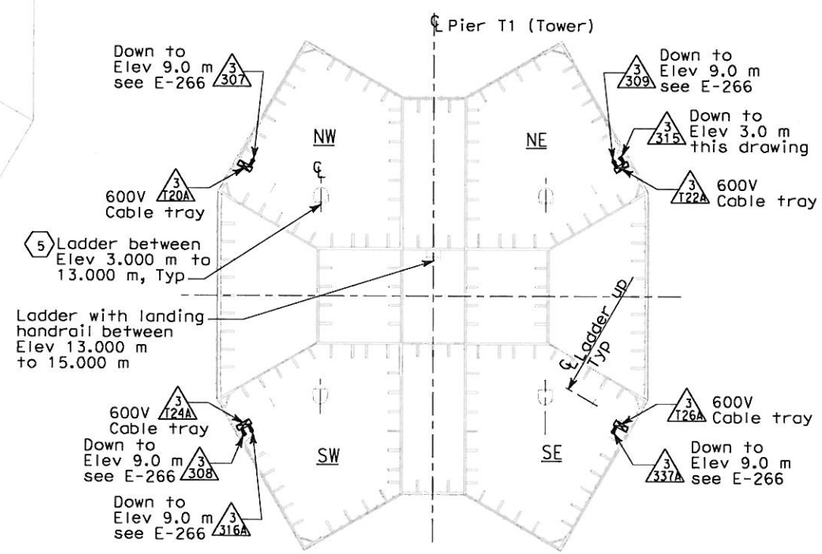

PLAN AT ELEV 13.0 m

NO SCALE

SHEET NOTES:

(1) Up to 600V cable tray at Elevation 13m, see plan this drawing.

(2) Splice #10 AWG Cu to #12 AWG CU in J-Box (PB-4F)

(3) For Sump Pump Basin installation, see Detail 6 on sheet E-267.

(4) For continuation, see sheet E-266.

(5) For ladder platform lighting inside tower shaft at Elev 13m, see sheet E-282.

(6) For location of light switches, see sheet E-266.

NOTES:

1. References:
   - For vertical conduit runs support system, see sheet E-287.
   - For utility panel UP-210 schedule, see sheet E-278.
   - For types of pull boxes, splice boxes and enclosures, see sheets E-83 and E-169.
   - For conduit and cable tray schedule, see sheets starting at E-401.
   - For lighting installation details, see sheet E-267.
   - For lighting fixture schedule, see sheet E-273.
   - For typical conduit installation details, see sheet E-268.
2. All conduits and fittings routed exposed at grating shall be rigid galvanized steel, PVC coated.
3. Electrical conduits shall enter the tower shafts between stiffeners A3 and A4 only. For conduit entry details, see Structural Utility drawings.
4. Fixture mounting height elevation shall be 2.4 m above floor/platform elevation UNO.
5. For other related work not shown on this sheet, see Electrical Special Provisions.

REQUEST FOR INFORMATION NOT ADDRESSED IN THIS CCO REMAIN IN FORCE

MARK	DATE	DESCRIPTIONS	BY	CH'D	CCO#
0	12/23/09	TOWER BASE MEP	RM AWG RR	RG FW	79
		REVISIONS			

CONTRACT CHANGE ORDER NO. 79
SHEET 9 OF 18

DETAILS
TOWER AND SUSPENSION CABLE TOWER POWER AND LIGHTING

SCALE AS NOTED

THIS PLAN ACCURATE FOR ELECTRICAL WORK ONLY.

ALL DIMENSIONS ARE IN MILLIMETERS UNLESS OTHERWISE SHOWN

E-266A

STATE OF CALIFORNIA - DEPARTMENT OF TRANSPORTATION
Caltrans

DESIGN OVERSIGHT: BEHZAD GOLEMOHAMMADI

CALCULATED/ DESIGNED BY	RG	DATE XX/08	REVISED BY
CHECKED BY	FW	XX/08	DATE REVISED

FOR REDUCED PLANS ORIGINAL SCALE IS IN MILLIMETERS 0 40 60 80

DGN FILE =>t:\13103\ms\pse\SAS Struc\CCO\SAS CC079\2009-12-23_Issued for Submittal\04-0120f1_0273S01.dgn
USERNAME =>llorico

CU 04251 EA 0120F1

LAST REVISION 00-00-00

DATE PLOTTED => 12/23/2009
TIME PLOTTED => 12:18:14 PM

DIST	COUNTY	ROUTE	KILOMETER POST TOTAL PROJECT	SHEET No	TOTAL SHEETS
04	SF	80	13.2/13.9	274 R1	1204

REGISTERED ELECTRICAL ENGINEER 12/19/02 DATE

12-6-04
PLANS APPROVAL DATE

REGISTERED PROFESSIONAL ENGINEER JENS ERLINGSSON No. 8249 Exp. 9/30/06 ELECTRICAL STATE OF CALIFORNIA

PB POWER, Inc.
A Parsons Brinckerhoff Company
303 Second St., Suite 700N
San Francisco, CA 94107-1317

The State of California or its officers or agents shall not be responsible for the accuracy or completeness of electronic copies of this plan sheet.

Caltrans now has a web site! To get to the web site, go to http://www.dot.ca.gov

Caltrans Metric

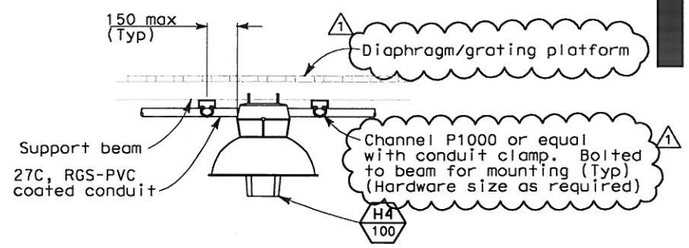

DETAIL 5
CEILING MOUNT
NO SCALE

NOTES:

1. Fittings and mounting hardwares shall be stainless steel. For additional requirements, see Electrical Special Provisions.
2. Deleted.
3. Install a duplex, straight blade, flush type with GFCI, NEMA L5-20R receptacle inside weatherproof single gang box and "While-in-Use" type cover plate.

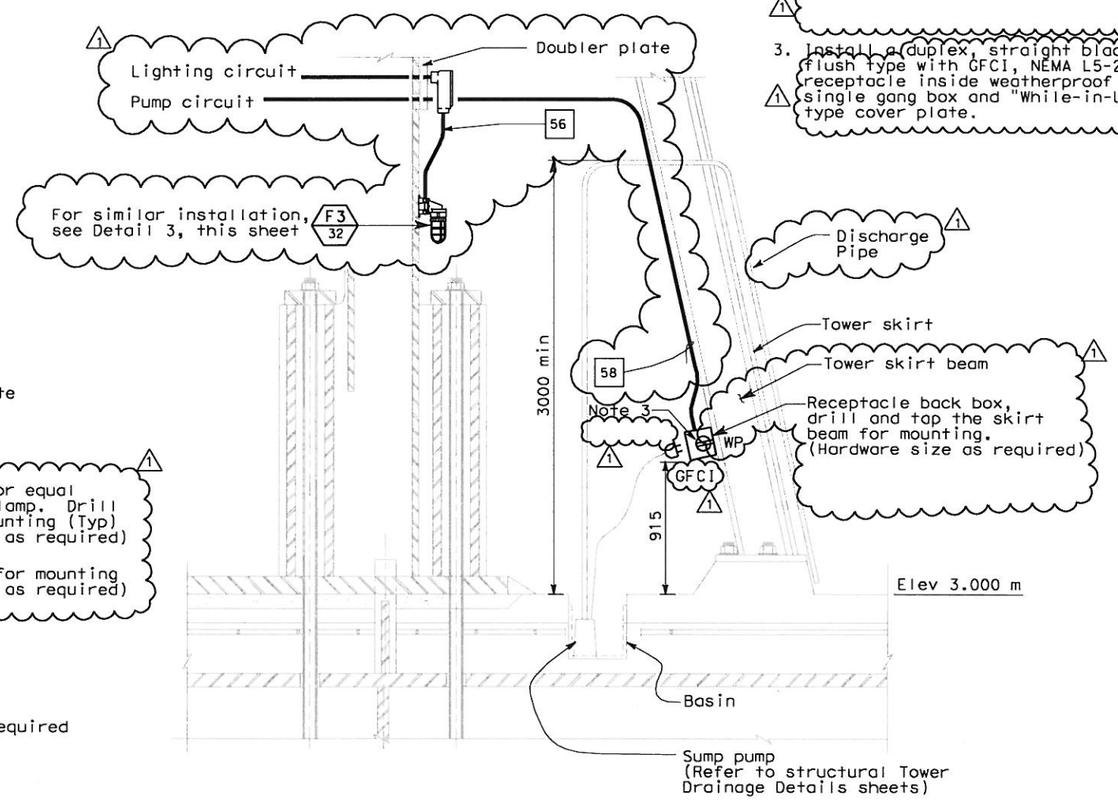

DETAIL 6
SUMP PUMP BASIN INSTALLATION
NO SCALE

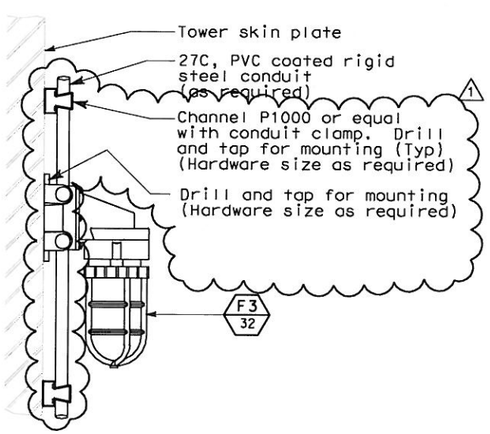

DETAIL 3
ACCESS LIGHTING
TOWER SKIN/SHAFT MOUNTED
NO SCALE

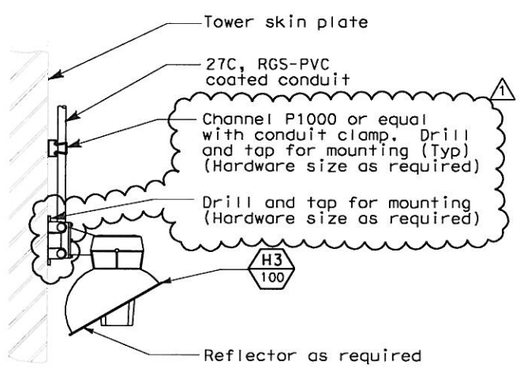

DETAIL 4
WALL MOUNT
NO SCALE

REGISTERED PROFESSIONAL ENGINEER FADI WALIEDDINE No. 11465 Exp. 12/31/2011 ELECTRICAL STATE OF CALIFORNIA

FOR REVISION ONLY

REQUEST FOR INFORMATION NOT ADDRESSED IN THIS CCO REMAIN IN FORCE

MARK	DATE	DESCRIPTIONS	BY	CH'D	CCO#
1	01/14/10	TOWER BASE MEP	RM AWG	RG FW	79

REVISIONS

CONTRACT CHANGE ORDER NO. 79
SHEET 10 OF 18

DETAILS
TOWER AND SUSPENSION CABLE TYPICAL LIGHTING INSTALLATION
SCALE AS NOTED

E-267

STATE OF CALIFORNIA - DEPARTMENT OF TRANSPORTATION
Caltrans

DESIGN OVERSIGHT
BEHZAD GOLEMOHAMMADI

CALCULATED/ DESIGNED BY	AB	DATE 10/01	REVISED BY	JE
CHECKED BY	AB	11/01	DATE REVISED	2/04

FOR REDUCED PLANS ORIGINAL SCALE IS IN MILLIMETERS 0 20 40 60 80

DGN FILE =>t:\13103\ms\pse\SAS Struc\CCO\SAS CC079\2009-12-23_Issued for Submittal\04-0120f1_0274R01.dgn
USERNAME =>llorico

CU 04251 | EA 0120F1

LAST REVISION 00-00-00
DATE PLOTTED => 1/13/2010
TIME PLOTTED => 1:17:51 PM

DIST	COUNTY	ROUTE	KILOMETER POST TOTAL PROJECT	SHEET No	TOTAL SHEETS
04	SF	80	13.2/13.9	281 R5	1204

REGISTERED ELECTRICAL ENGINEER 12/19/02 DATE

12-6-04
PLANS APPROVAL DATE

REGISTERED PROFESSIONAL ENGINEER JENS ERLINGSSON No. 8249 Exp. 9/30/06 ELECTRICAL STATE OF CALIFORNIA

PB POWER, Inc.
A Parsons Brinckerhoff Company
303 Second St., Suite 700N
San Francisco, CA 94107-1317

The State of California or its officers or agents shall not be responsible for the accuracy or completeness of electronic copies of this plan sheet.

Caltrans now has a web site! To get to the web site, go to http://www.dot.ca.gov

Caltrans Metric

UTILITY PANEL UP-210 (CKT #2123)

Location: PIER 1 TOWER AT PLATFORM ELEV 53.85 m

LOAD DESCRIPTION	LTG	REC	OTH.	CB			CB	LTG	REC	OTH.	LOAD DESCRIPTION
Spare				20/1	1 A 2		20/1 (5)	1794 (5)			Tower Base LTG (13) @ EL. 9.0 m (5)
Fog Detection Panel FDP-5			2880	30/1	3 B 4		20/1		1440		Recept Tower Base (8) @ EL. 9.0 m
Sump Pump @ Elev 3.000 m Sump P-A			1440	20/1	5 C 6		20/1 (5)	1794 (5)			Tower Base LTG (13) @ EL. 9.0 m (5)
Sump Pump @ Elev 3.000 m Sump P-B			1440	20/1	7 A 8		20/1		900		Recept Tower Base (5) @ EL. 9.0 m
Elevator Light & Fan			220	20/1	9 B 10		20/1	287			Platform LTG (7) @ EL. 53.85 m
Recept Platform (5) @ EL. 53.85 m		900		20/1	11 C 12		20/1			900	Strong Motion Recorder #3
SE Ltg.Tower Diaphragm (11) @ Elev 13.00 - 53.85 m	1573			20/1	13 A 14		20/1	1573			SW Ltg.Tower Diaphragm (11) @ Elev 13.00 - 53.85 m
NE Ltg.Tower Diaphragm (11) @ Elev 13.00 - 53.85 m	1573			20/1	15 B 16		20/1	1573			NW Ltg.Tower Diaphragm (11) @ Elev 13.00 - 53.85 m
Recept. (6) SE Tower Diaphragm @ Elev 13.00 - 53.85 m		1080		20/1	17 C 18		20/1		1080		Recept. (6) SW Tower Diaphragm @ Elev 13.00 - 53.85 m
Recept. (6) NE Tower Diaphragm @ Elev 13.00 - 53.85 m		1080		20/1	19 A 20		20/1		1080		Recept. (6) NW Tower Diaphragm @ Elev 13.00 - 53.85 m
Tower Base LTG (2) @ EL. 3.0 m	286			20/1	21 B 22		20/1	715			Tower Base LTG (5) @ EL. 3.0 m
Recept Tower Base (1) @ EL. 3.0 m		180		20/1	23 C 24		20/1		360		Recept Tower Base (2) @ EL. 3.0 m
Spare				20/1	25 A 26		20/1		180		Recept. (1) SW Tower Diaphragm @ Elev 9.00 m
				20/1	27 B 28		20/1			150	RTU-10E-A NW Shaft @ Elev 158.00m
Spare				20/1	29 C 30		20/1			100	120VAC/24VDC Converter Unit NW @ Elev 158.00m
TOTAL VA	3432	3240	5980					(5) 7736	5040	1150	TOTAL VA

LOAD SUMMARY (INCLUDES .90PF) (VA)

Lighting (At 100%): 11727
Gen Use (1st 10 kVA AT 100% Plus 50% of remainder): 12146 (5)

TOTAL kVA: 26.578 (5)

BALANCE (kVA)

Phase A - 9.620 (5)
Phase B - 9.124
Phase C - 7.834 (5)

VOLTAGE: 208/120 V
PHASE/WIRES: 3-Phase, 4-Wire
BUS RATING: 100 A
MAIN: 100 A Frame
MOUNTING: Surface
K.A.I.C.: 10

FEEDER ENTRY: TOP RIGHT

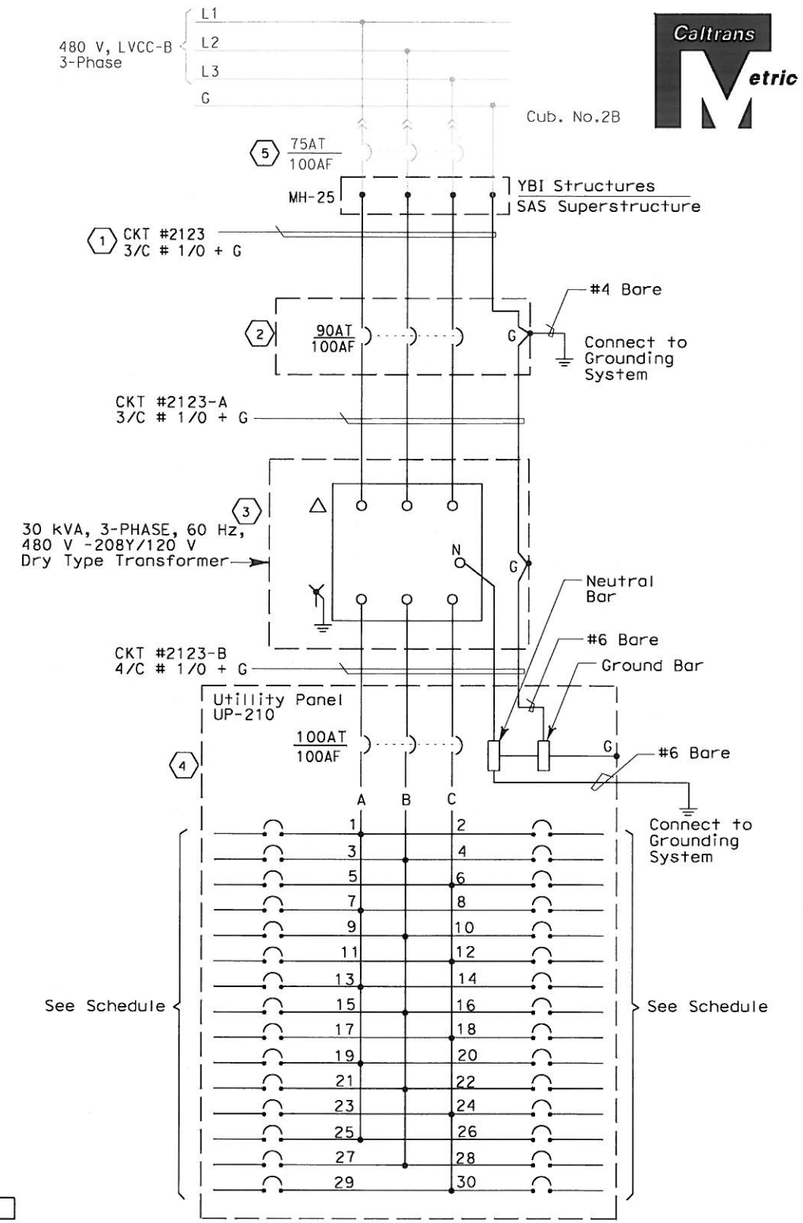

SHEET NOTES:

(1) The Contractor shall extend and coil 5 meters of cable in Manhole-25. All cables shall be tagged with circuit number as shown (YBI-1 contract).

(2) Enclosed type circuit breaker in NEMA type 4x stainless steel enclosure.

(3) Dry type step down transformer with copper winding in NEMA type 4x stainless steel enclosure.

(4) Panelboard w/ 100A copper bus in NEMA type 4x stainless steel enclosure.

(5) As-built feeder circuit breaker rating per YBI Substation contract. Feeder conductor size accomplished by YBI-1 contract.

NOTES:

1. The Contractor shall provide nameplates and circuit schedules as shown.
2. Deleted.
3. References:
   - For conduit and cable tray schedules, see sheets starting at E-401.
   - For pull box schedules, see sheets E-83 and E-169.
   - For elevator pit circuits, see sheet E-265.
   - For LVCC-B single line diagram, see sheets E-32 through E-34.
   - For equipment location and arrangement, see sheets E-264B E-264C.

REGISTERED PROFESSIONAL ENGINEER SYN YEE CHIN No. 18186 Exp. 09/30/2013 ELECTRICAL STATE OF CALIFORNIA

Syn Yee Chin
FOR REVISION ONLY
(4) (5)

REGISTERED PROFESSIONAL ENGINEER FADI WALIEDDINE No. 11465 Exp. 12/31/2009 ELECTRICAL STATE OF CALIFORNIA

FOR REVISION ONLY
(1) (2) (3)

REQUEST FOR INFORMATION NOT ADDRESSED IN THIS CCO REMAIN IN FORCE

MARK	DATE	DESCRIPTIONS	BY	CH'D	CCO#
(5)	06/20/12	TOWER BASE MEP	TW	RG	79
(4)	03/26/10	DEHUMIDIFIER SCADA INTERFACE	RR	RG SYC	130
(3)	12/23/09	TOWER BASE MEP	RR	RG FW	79
(2)	09/18/09	TOWER UTILITY PANELS	JS TW	RG FW	70
(1)	04/10/09	ELECTRICAL WARNING SYSTEMS	JS TW	RG FW	61

REVISIONS

CONTRACT CHANGE ORDER NO. 79
SHEET 11 OF 18

DETAILS
TOWER AND SUSPENSION CABLE PANEL UP-210 SCHEDULE
NO SCALE

E-278

REVISED BY	DATE REVISED
AB	2/04

DATE	
10/01	11/01

CALCULATED/DESIGNED BY	CHECKED BY
FK	EDC

DESIGN OVERSIGHT
BEHZAD GOLEMOHAMMADI

STATE OF CALIFORNIA - DEPARTMENT OF TRANSPORTATION
Caltrans

LAST REVISION 05-18-12
DATE PLOTTED => 6/20/2012
TIME PLOTTED => 3:07:37 PM

FOR REDUCED PLANS ORIGINAL SCALE IS IN MILLIMETERS 0 20 40 60 80

DGN FILE =>T:\13103\WS\pse\SAS Struc\CCO\SAS CCO79\Temp 6-15-12\04-0120f1_0281R05.dgn
USERNAME =>garciar

CU 04251 | EA 0120F1

NOTES:

1. References:
   - For lighting schedules, see sheet E-273.
   - For circuit and conduit/cable tray schedules, see sheets starting at E-401.
   - For light and switch wiring, see sheets E-274, E-275 and E-275A.
   - For tower ladder platform lighting, Refer to sheets E-282 & E-264B.
   - For typical ladder platform lighting mounting detail, see sheet E-283.
   - for pull box schedule, see sheet E-83.

SHEET NOTES:

1. Cable tray ID shown is for SE tower shaft. See sheet E-270B for NE, NW & SW cable tray ID's.
2. For typical switch and receptacle mounting details, see sheet E-268, Detail 11.
3. For lighting, pull box, switches and receptacles plan, see sheets E-264B, E-282, E-285, E-285B and E-286
4. Circuit ID shown is for SE tower shaft, See sheets E-274, E-275 and E-275A for NE, NW and SW circuit ID's.
5. For conduit sizes, see sheets E-264B, E-282.

REQUEST FOR INFORMATION NOT ADDRESSED IN THIS CCO REMAIN IN FORCE					
2	12/23/09	TOWER BASE MEP	TW RR	RG FW	79
1	09/18/09	TOWER UTILITY PANELS	JS TW	RG FW	70
MARK	DATE	DESCRIPTIONS	BY	CH'D	CCO#
		REVISIONS			

CONTRACT CHANGE ORDER NO. 79
SHEET 12 OF 18

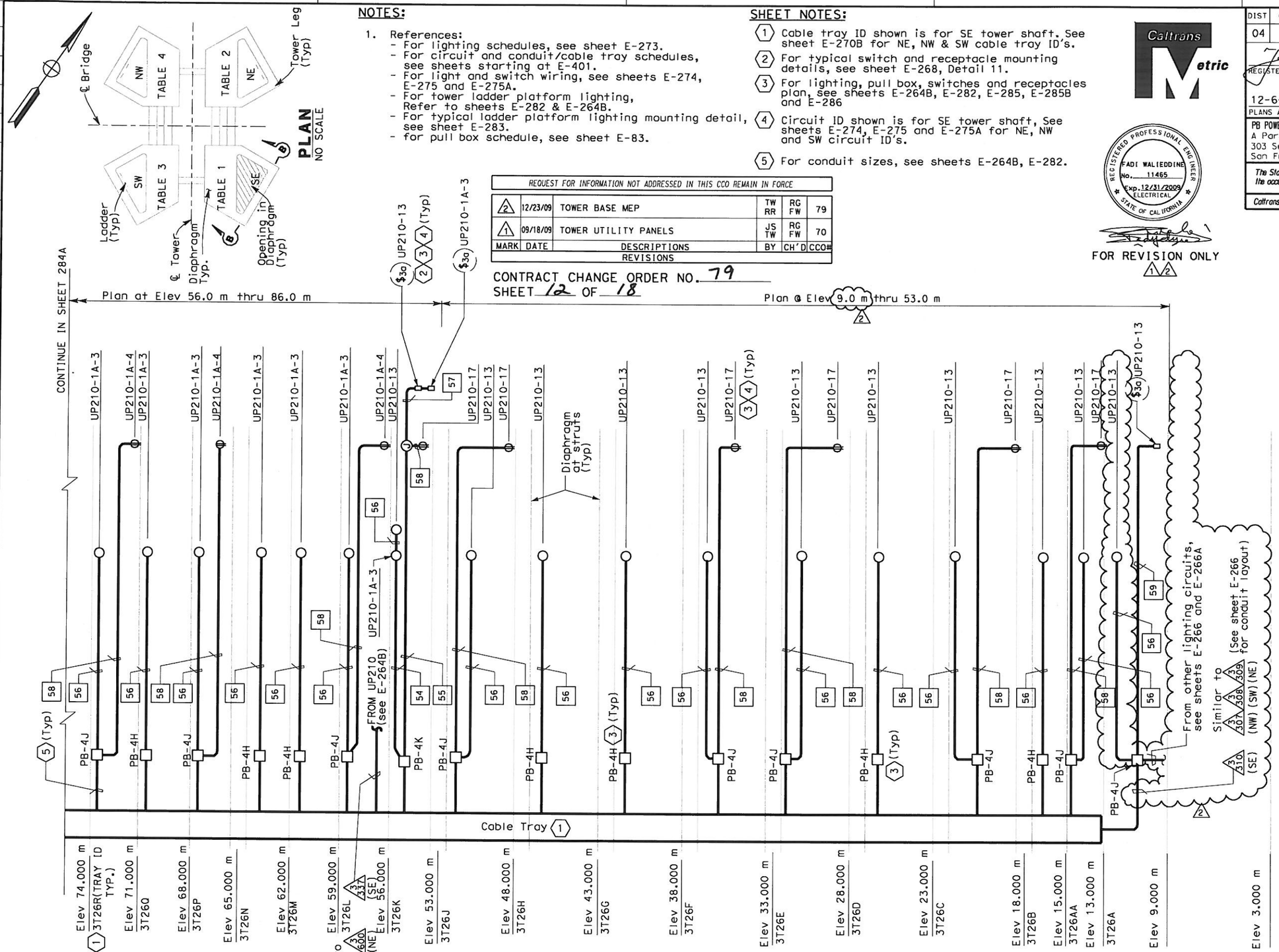

TYPICAL SECTION B-B AT SE DIAPHRAGM

NE, SW & NW SIMILAR AS SE

DETAILS
TOWER AND SUSPENSION CABLE
TOWER LADDER PLATFORM LIGHTING

SCALE AS NOTED

E-284

THIS PLAN ACCURATE FOR ELECTRICAL WORK ONLY.

ALL DIMENSIONS ARE IN METERS UNLESS OTHERWISE SHOWN

FOR REDUCED PLANS ORIGINAL SCALE IS IN MILLIMETERS 0 20 40 60 80

DIST	COUNTY	ROUTE	KILOMETER POST TOTAL PROJECT	SHEET No	TOTAL SHEETS
04	SF	80	13.2/13.9	287 R2	1204

REGISTERED ELECTRICAL ENGINEER — DATE 12/19/02

12-6-04
PLANS APPROVAL DATE

REGISTERED PROFESSIONAL ENGINEER JENS ERLINGSSON No. 8249 Exp. 9/30/06 ELECTRICAL STATE OF CALIFORNIA

REGISTERED PROFESSIONAL ENGINEER FADI WALIEDDINE No. 11465 Exp. 12/31/2009 ELECTRICAL STATE OF CALIFORNIA

FOR REVISION ONLY 1 2

PB POWER, Inc.
A Parsons Brinckerhoff Company
303 Second St., Suite 700N
San Francisco, CA 94107-1317

The State of California or its officers or agents shall not be responsible for the accuracy or completeness of electronic copies of this plan sheet.

Caltrans now has a web site! To get to the web site, go to http://www.dot.ca.gov

Caltrans Metric

STATE OF CALIFORNIA - DEPARTMENT OF TRANSPORTATION
Caltrans

DESIGN OVERSIGHT: BEHZAD GOLEMOHAMMADI

CALCULATED/DESIGNED BY	FK	DATE 10/01	REVISED BY
CHECKED BY	EDC	11/01	DATE REVISED

LAST REVISION 00-00-00

DATE PLOTTED => 12/23/2009
TIME PLOTTED => 12:18:58 PM

DGN FILE => t:\13103\ms\pse\SAS Struc\CCO\SAS CC079\2009-12-23_Issued for Submittal\04-0120f1_0287R02.dgn
USERNAME => llorico

CU 04251 | EA 0120F1

CONDUIT DATA

Conduit No.	Reference	Size	Type	Total Fill (mm²)	Allowable Fill (mm²)	Included Cable No.	Conductor Type
3256	E-229	41	Liquidtight flexible metal conduit	425.70	511.11	A-3042-2	3 + 1 gnd #6,#8, 600 V, RHH/RHW insulation
						A-3043-2	3 + 1 gnd #6,#8, 600 V, RHH/RHW insulation
						Pull rope	Soft-Fiber Polyester
3257	E-229	41	Liquidtight flexible metal conduit	425.70	511.11	A-3043-2	3 + 1 gnd #6,#8, 600 V, RHH/RHW insulation
						Pull rope	Soft-Fiber Polyester
						A-3042-2	3 + 1 gnd #6,#8, 600 V, RHH/RHW insulation
3258	E-229	41	Liquidtight flexible metal conduit	425.70	511.11	A-3042-2	3 + 1 gnd #6,#8, 600 V, RHH/RHW insulation
						A-3043-2	3 + 1 gnd #6,#8, 600 V, RHH/RHW insulation
						Pull rope	Soft-Fiber Polyester
3259	E-229	41	Liquidtight flexible metal conduit	425.70	511.11	A-3042-2	3 + 1 gnd #6,#8, 600 V, RHH/RHW insulation
						A-3043-2	3 + 1 gnd #6,#8, 600 V, RHH/RHW insulation
						Pull rope	Soft-Fiber Polyester
3260	E-229	41	Liquidtight flexible metal conduit	425.70	511.11	A-3042-2	3 + 1 gnd #6,#8, 600 V, RHH/RHW insulation
						A-3043-2	3 + 1 gnd #6,#8, 600 V, RHH/RHW insulation
						Pull rope	Soft-Fiber Polyester
3261	E-229	41	Liquidtight flexible metal conduit	425.70	511.11	A-3042-2	3 + 1 gnd #6,#8, 600 V, RHH/RHW insulation
						A-3043-2	3 + 1 gnd #6,#8, 600 V, RHH/RHW insulation
						Pull rope	Soft-Fiber Polyester
3262	E-229	41	Liquidtight flexible metal conduit	425.70	511.11	A-3043-2	3 + 1 gnd #6,#8, 600 V, RHH/RHW insulation
						A-3042-2	3 + 1 gnd #6,#8, 600 V, RHH/RHW insulation
						Pull rope	Soft-Fiber Polyester
3263	E-229	41	Liquidtight flexible metal conduit	425.70	511.11	A-3042-2	3 + 1 gnd #6,#8, 600 V, RHH/RHW insulation
						Pull rope	Soft-Fiber Polyester
						A-3043-2	3 + 1 gnd #6,#8, 600 V, RHH/RHW insulation
3264	E-228, E-229	41	Liquidtight flexible metal conduit	425.70	511.11	A-3042-2	3 + 1 gnd #6,#8, 600 V, RHH/RHW insulation
						A-3043-2	3 + 1 gnd #6,#8, 600 V, RHH/RHW insulation
						Pull rope	Soft-Fiber Polyester
3265	E-228	41	Liquidtight flexible metal conduit	425.70	511.11	A-3043-2	3 + 1 gnd #6,#8, 600 V, RHH/RHW insulation
						Pull rope	Soft-Fiber Polyester
						A-3042-2	3 + 1 gnd #6,#8, 600 V, RHH/RHW insulation
3266	E-228	41	Liquidtight flexible metal conduit	425.70	511.11	A-3043-2	3 + 1 gnd #6,#8, 600 V, RHH/RHW insulation
						Pull rope	Soft-Fiber Polyester
						A-3042-2	3 + 1gnd #6,#8, 600 V, RHH/RHW insulation
3267	E-228	41	Liquidtight flexible metal conduit	425.70	511.11	A-3042-2	3 + 1gnd #6,#8, 600 V, RHH/RHW insulation
						A-3043-2	3 + 1 gnd #6,#8, 600 V, RHH/RHW insulation
						Pull rope	Soft-Fiber Polyester
3268	E-228	41	Liquidtight flexible metal conduit	212.85	511.11	Pull rope	Soft-Fiber Polyester
						A-3042-2	3 + 1 gnd #6,#8, 600 V, RHH/RHW insulation
3269	E-228	41	Liquidtight flexible metal conduit	212.85	511.11	A-3042-2	3 + 1 gnd #6,#8, 600 V, RHH/RHW insulation
						Pull rope	Soft-Fiber Polyester
3270	E-228	41	Liquidtight flexible metal conduit	212.85	511.11	A-3042-2	3 + 1 gnd #6,#8, 600 V, RHH/RHW insulation
						Pull rope	Soft-Fiber Polyester
3271	E-228	41	Liquidtight flexible metal conduit	212.85	511.11	A-3042-2	3 + 1 gnd #6,#8, 600 V, RHH/RHW insulation
						Pull rope	Soft-Fiber Polyester
3272	E-228	41	Liquidtight flexible metal conduit	212.85	511.11	Pull rope	Soft-Fiber Polyester
						A-3042-2	3 + 1 gnd #6,#8, 600 V, RHH/RHW insulation
3273	E-228	41	Liquidtight flexible metal conduit	212.85	511.11	A-3042-2	3 + 1 gnd #6,#8, 600 V, RHH/RHW insulation
						Pull rope	Soft-Fiber Polyester
3274	E-228	41	Liquidtight flexible metal conduit	212.85	511.11	A-3042-2	3 + 1 gnd #6,#8, 600 V, RHH/RHW insulation
						Pull rope	Soft-Fiber Polyester
3275	E-227, E-228	41	Liquidtight flexible metal conduit	212.85	511.11	A-3042-2	3 + 1gnd #6,#8, 600 V, RHH/RHW insulation
						Pull rope	Soft-Fiber Polyester
3276	E-227	41	Liquidtight flexible metal conduit	212.85	511.11	A-3042-2	3 + 1 gnd #6,#8, 600 V, RHH/RHW insulation
						Pull rope	Soft-Fiber Polyester
~~3277~~							
3277A	E-265	27	RGS-PVC coated conduit	121.74	229.03	2119-2	4 pair #22, shielded pairs, 300 V, PE insulation

REQUEST FOR INFORMATION NOT ADDRESSED IN THIS CCO REMAIN IN FORCE

MARK	DATE	DESCRIPTIONS	BY	CH'D	CCO#
4	12/23/09	TOWER BASE MEP	TW RR	RG FW	79
3	09/18/09	TOWER UTILITY PANELS	TW	RG FW	70
2	09/24/08	CABLE ELECTRICAL	RR AG	RG SE	72
1	02/19/08	ELECTRICAL MODIFICATIONS	MP EL	RR	42

REVISIONS

CONTRACT CHANGE ORDER NO. 79
SHEET 13 OF 18

REGISTERED PROFESSIONAL ENGINEER MAXWELL FUMIO TAKAKI No. E 8651 Exp. 9/30/2010 ELECTRICAL STATE OF CALIFORNIA (1)

FOR REVISION ONLY

REGISTERED PROFESSIONAL ENGINEER S. A. ESTOQUE JR No. E-10151 Exp. 12/31/2008 ELECTRICAL STATE OF CALIFORNIA (2)

FOR REVISION ONLY

REGISTERED PROFESSIONAL ENGINEER FADI WALIEDDINE No. 11465 Exp. 12/31/2009 ELECTRICAL STATE OF CALIFORNIA (3) (4)

FOR REVISION ONLY

Caltrans Metric

DIST	COUNTY	ROUTE	KILOMETER POST TOTAL PROJECT	SHEET No	TOTAL SHEETS
04	SF	80	13.2/13.9	381 R4	1204

12/19/02
REGISTERED ELECTRICAL ENGINEER DATE

12-6-04
PLANS APPROVAL DATE

REGISTERED PROFESSIONAL ENGINEER JENS ERLINGSSON No. 8249 Exp. 9/30/06 ELECTRICAL STATE OF CALIFORNIA

PB POWER, Inc.
A Parsons Brinckerhoff Company
303 Second St., Suite 700N
San Francisco, CA 94107-1317

The State of California or its officers or agents shall not be responsible for the accuracy or completeness of electronic copies of this plan sheet.

Caltrans now has a web site! To get to the web site, go to http://www.dot.ca.gov

CONDUIT DATA

Conduit No.	Reference	Size	Type	Total Fill (mm²)	Allowable Fill (mm²)	Included Cable No.	Conductor Type
3278	E-264, E-264A	103	RGS-PVC coated conduit	2108.72	3324.51	2123-2	1-3/C + gnd #2, 600V, EPR insulation
						A-3057-1	1-3/C + gnd #2, 600V, EPR insulation
						2123	1-3/C + gnd #2, 600V, EPR insulation
						2123-3	1-3/C + gnd #2, 600V, EPR insulation
3281	E-231	53	RGS-PVC coated conduit	527.18 (4)	879.42 (4)	A-3057-1	1-3/C + gnd #2,600V, RHH/RHW insulation
3281A	E-264	53	RGS-PVC coated conduit	527.18	879.42	A-3057-1	1-3/C + gnd #2, 600V, RHH/RHW insulation
3282	E-231	41	RGS-PVC coated conduit	425.70	534.55	A-3057-4	3 + 1 gnd #6,#8, 600 V, RHH/RHW insulation
						A-3057-3	3 + 1 gnd #6,#8, 600 V, RHH/RHW insulation
						Pull rope	Soft-Fiber Polyester
3283	E-231	41	RGS-PVC coated conduit	212.85	534.55	Pull rope	Soft-Fiber Polyester
						A-3057-4	3 + 1 gnd #6,#8, 600 V, RHH/RHW insulation
3285	E-231	41	RGS-PVC coated conduit	212.85	534.55	A-3057-3	3 + 1 gnd #6,#8, 600 V, RHH/RHW insulation
						Pull rope	Soft-Fiber Polyester
3286	E-231	41	RGS-PVC coated conduit	212.85	534.55	A-3057-3	3 + 1 gnd #6,#8, 600 V, RHH/RHW insulation
						Pull rope	Soft-Fiber Polyester
3287	E-231	41	RGS-PVC coated conduit	212.85	534.55	A-3057-3	3 + 1 gnd #6,#8, 600 V, RHH/RHW insulation
						Pull rope	Soft-Fiber Polyester
3288	E-231	41	RGS-PVC coated conduit	212.85	534.55	Pull rope	Soft-Fiber Polyester
						A-3057-3	3 + 1 gnd #6,#8, 600 V, RHH/RHW insulation
3290	E-231	41	RGS-PVC coated conduit	212.85	534.55	Pull rope	Soft-Fiber Polyester
						A-3057-4	3 + 1 gnd #6,#8, 600 V, RHH/RHW insulation
3291	E-231	41	RGS-PVC coated conduit	212.85	534.55	Pull rope	Soft-Fiber Polyester
						A-3057-4	3 + 1 gnd #6,#8, 600 V, RHH/RHW insulation
3292	E-231	41	RGS-PVC coated conduit	212.85	534.55	Pull rope	Soft-Fiber Polyester
						A-3057-4	3 + 1 gnd #6,#8, 600 V, RHH/RHW insulation
3293	E-231	41	RGS-PVC coated conduit	212.85	534.55	A-3057-4	3 + 1 gnd #6,#8, 600 V, RHH/RHW insulation
						Pull rope	Soft-Fiber Polyester
3294	E-264, E-264A	41	RGS-PVC coated conduit	147.25	414.28	2120-1	1-3/C #14, 600 V, EPR insulation
						2120-2	1-3/C #16, 600 V, EPR insulation
3295	E-287	53	RGS-PVC coated conduit	754.18	1255.65	Pull rope	Soft-Fiber Polyester
						2120	1-3/C + gnd #1/0,600 V, EPR insulation
3297	E-264, E-264A	27	RGS-PVC coated conduit	121.74	229.03	2119-2	4 pair #22, shielded pairs, 300 V, PE insulation

For continuation, see next sheet.

CONDUIT AND TRAY SCHEDULE

E-426

DATE	REVISED BY	DATE	REVISED
8/02	AB	8/02	

CALCULATED/DESIGNED BY: PBP
CHECKED BY: AB

DESIGN OVERSIGHT: BEHZAD GOLEMOHAMMADI

STATE OF CALIFORNIA - DEPARTMENT OF TRANSPORTATION
Caltrans

LAST REVISION 00-00-00

DATE PLOTTED => 12/23/2009
TIME PLOTTED => 12:19:11 PM

FOR REDUCED PLANS ORIGINAL SCALE IS IN MILLIMETERS 0 20 40 60 80

DGN FILE =>t:\13103\ms\pse\SAS Struc\CCO\SAS CC079\2009-12-23_Issued for Submittal\04-0120f1_0381R04.dgn
USERNAME =>llorico

CU 04251 | EA 0120F1

DIST	COUNTY	ROUTE	KILOMETER POST TOTAL PROJECT	SHEET No	TOTAL SHEETS
04	SF	80	13.2/13.9	382 R3	1204

REGISTERED ELECTRICAL ENGINEER 12/19/02 DATE

12-6-04
PLANS APPROVAL DATE

PB POWER, Inc.
A Parsons Brinckerhoff Company
303 Second St., Suite 700N
San Francisco, CA 94107-1317

REGISTERED PROFESSIONAL ENGINEER JENS ERLINGSSON No. 8249 Exp. 9/30/06 ELECTRICAL STATE OF CALIFORNIA

The State of California or its officers or agents shall not be responsible for the accuracy or completeness of electronic copies of this plan sheet.

Caltrans now has a web site! To get to the web site, go to http://www.dot.ca.gov

Caltrans Metric

REQUEST FOR INFORMATION NOT ADDRESSED IN THIS CCO REMAIN IN FORCE

MARK	DATE	DESCRIPTIONS	BY	CH'D	CCO#
3	12/23/09	TOWER BASE MEP	RR AWG	RG FW	79
2	09/18/09	TOWER UTILITY PANELS	JS TW	RG	70
1	02/19/08	ELECTRICAL MODIFICATIONS	MP EL	RR	42

REVISIONS

CONTRACT CHANGE ORDER NO. 79
SHEET 14 OF 18

REGISTERED PROFESSIONAL ENGINEER MARCELL FUMIO TAKATA No. E 8651 Exp. 9/30/2008 ELECTRICAL STATE OF CALIFORNIA 1

FOR REVISION ONLY

REGISTERED PROFESSIONAL ENGINEER FADI WALIEDDINE No. 11465 Exp. 12/31/2009 ELECTRICAL STATE OF CALIFORNIA 2 3

FOR REVISION ONLY

CONDUIT DATA

Conduit No.	Reference	Size	Type	Total Fill (mm²)	Allowable Fill (mm²)	Included Cable No.	Conductor Type
3298	E-265	53	RGS-PVC coated conduit	102.61	879.42	Pull rope	Soft-Fiber Polyester
						UP210-9	1-3/C #12,600 V, EPR insulation
3307	E-266	41	RGS conduit	262.68	534.55	Pull rope	Soft-Fiber Polyester
						UP210-16	1-3/C + gnd #8, 600V EPR insulation
3308	E-266	53	RGS conduit	717.60	879.42	Pull rope	Soft-Fiber Polyester
						UP210-14	1-3/C + gnd #8, 600V EPR insulation
						UP210-23	1-2/C + gnd #8, 600V EPR insulation
						UP210-26	1-2/C + gnd #8, 600V EPR insulation
3309	E-266	53	RGS conduit	490.14	879.42	Pull rope	Soft-Fiber Polyester
						UP210-15	1-3/C + gnd #8, 600V EPR insulation
						UP210-22	1-2/C + gnd #8, 600V EPR insulation
3311	E-265	53	RGS-PVC coated conduit 3	0.00	879.42	Pull rope	Soft-Fiber Polyester
3313	E-266, E-266A	53	RGS-PVC coated conduit	454.92	879.42	Pull rope	Soft-Fiber Polyester
						UP210-21	1-2/C + gnd #8, 600V EPR insulation
						UP210-23	1-2/C + gnd #8, 600V EPR insulation
3314	E-266, E-266A	53	RGS-PVC coated conduit	454.92	879.42	Pull rope	Soft-Fiber Polyester
						UP210-22	1-2/C + gnd #8, 600V EPR insulation
						UP210-24	1-2/C + gnd #8, 600V EPR insulation
3315	E-266, E-266A	53	RGS-PVC coated conduit	286.0	879.42	Pull rope	Soft-Fiber Polyester
						UP210-5 & 7	1-4/C + gnd #8 600V EPR insulation
3316	E-264B, E-264C	78	RGS-PVC coated conduit	1300.80	1935.24	Pull rope	Soft-Fiber Polyester
	E-278, E-284					UP210-2 & 4	1-4/C + gnd #6, 600 V, EPR insulation
						UP210-14 & 18	1-4/C + gnd #8, 600 V, EPR insulation
						UP210-21	1-2/C + gnd #8, 600V EPR insulation
						UP210-23	1-2/C + gnd #8, 600V EPR insulation
						UP210-26	1-2/C + gnd #8, 600V EPR insulation
3316A	E-266	53	RGS-PVC coated conduit	581.18	879.42	Pull rope	Soft-Fiber Polyester
						UP210-2	1-2/C + gnd #8, 600V EPR insulation
						UP210-4	1-2/C + gnd #8, 600V EPR insulation
						UP210-21 3	1-2/C + gnd #8, 600V EPR insulation 3
3319	E-264, E-264A	78	RGS-PVC coated conduit	1655.61	1935.24	2121	1-3/C + gnd #1/0, 600 V, EPR insulation
						2120	1-3/C + gnd #1/0, 600 V, EPR insulation
						2121-1	1-3/C #14,600 V, EPR insulation
						2121-2	1-3/C #16, 600 V, EPR insulation
3320	E-264	78	RGS-PVC coated conduit	1281.36	1935.24	2120	1-3/C + gnd #1/0, 600 V, EPR insulation
						Pull rope	Soft-Fiber Polyester
						2123-2	1-3/C + gnd #2, 600 V, EPR insulation
3320A	E-287	53	RGS-PVC coated conduit	754.18	879.42	2120	1-3/C + gnd #1/0, 600 V, EPR insulation
						Pull rope	Soft-Fiber Polyester
3322	E-264, E-264A	78	RGS-PVC coated conduit	754.18	1935.24	2119-A	1-3/C + gnd #1/0, 600 V, EPR insulation
						Pull rope	Soft-Fiber Polyester
3322C	E-265	78	RGS-PVC coated conduit	754.18	1935.24	2119-A	1-3/C + gnd #1/0, 600 V, EPR insulation
						Pull rope	Soft-Fiber Polyester
3323	E-264	78	RGS-PVC coated conduit	901.43	1935.24	2121-2	1-3/C #16, 600 V, EPR insulation
						2121-1	1-3/C #14, 600 V, EPR insulation
						Pull rope	Soft-Fiber Polyester
						2121	1-3/C + gnd #1/0,600 V, EPR insulation
3323A	E-286	78	RGS-PVC coated conduit	901.43	1935.24	2121-2	1-3/C #16, 600 V, EPR insulation
						2121-1	1-3/C #14, 600 V, EPR insulation
						Pull rope	Soft-Fiber Polyester
						2121	1-3/C + gnd #1/0,600 V, EPR insulation
3323B	E-286, E-287	78	RGS-PVC coated conduit	901.43	1935.24	2121-2	1-3/C #16, 600 V, EPR insulation
						2121-1	1-3/C #14, 600 V, EPR insulation
						Pull rope	Soft-Fiber Polyester
						2121	1-3/C + gnd #1/0,600 V, EPR insulation
3323C	E-287	78	RGS-PVC coated conduit	901.43	1935.24	2121-2	1-3/C #16, 600 V, EPR insulation
						2121-1	1-3/C #14, 600 V, EPR insulation
						Pull rope	Soft-Fiber Polyester
						2121	1-3/C + gnd #1/0,600 V, EPR insulation

CONDUIT DATA

Conduit No.	Reference	Size	Type	Total Fill (mm²)	Allowable Fill (mm²)	Included Cable No.	Conductor Type
3324	E-286	53	RGS-PVC coated conduit	0.00	879.42	Pull rope	Soft-Fiber Polyester
3324A	E-286, E-287	53	RGS-PVC coated conduit	0.00	879.42	Pull rope	Soft-Fiber Polyester
3324B	E-287	53	RGS-PVC coated conduit	0.00	879.42	Pull rope	Soft-Fiber Polyester
3329	E-265	53	RGS-PVC coated conduit	0.00	879.42	Pull rope	Soft-Fiber Polyester
3330	E-264A, E-281	41	RGS-PVC coated conduit	384.80	534.55	CCTVE01BA	TVP
						CCTVE01BB	TVCP
						CCTVE01AA	TVP
						CCTVE01AB	TVCP
3330C	E-281	41	RGS-PVC coated conduit	192.4	534.55	CCTVE01AA	TVP
						CCTVE01AB	TVCP
3330D	E-281	41	RGS-PVC coated conduit	192.4	534.55	CCTVE01BA	TVP
						CCTVE01BB	TVCP
3330E	E-281	41	RGS-PVC coated conduit	192.4	534.55	CCTVE01AA	TVP
						CCTVE01AB	TVCP
3330F	E-281	41	RGS-PVC coated conduit	192.4	534.55	CCTVE01BA	TVP
						CCTVE01BB	TVCP
3333	E-264, E-264B	78	RGS-PVC coated conduit	754.18	1935.24	Pull rope	Soft-Fiber Polyester
						2123	1-3/C + gnd #1/0, 600 V, EPR insulation
3337	E-264B	78	RGS-PVC coated conduit	618.45	1935.24	Pull rope	Soft-Fiber Polyester
						UP210-6 & 8	1-4/C + gnd #6, 600 V, EPR insulation
						UP210-13 & 17	1-4/C + gnd #8, 600 V, EPR insulation
3337A	E-266	53	RGS-PVC coated conduit	3 585.13	879.42	Pull rope	Soft-Fiber Polyester
						~~UP210-6 & 8~~	~~1-4/C + gnd #6, 600 V, EPR insulation~~
					3	UP210-13	1-3/C + gnd #8, 600V EPR insulation

For continuation, see next sheet.

CONDUIT AND TRAY SCHEDULE

E-427

REVISED BY	DATE	CALCULATED/ DESIGNED BY	DATE	CHECKED BY
DATE REVISED	8/02	PBP	8/02	AB

DESIGN OVERSIGHT
BEHZAD GOLEMOHAMMADI

STATE OF CALIFORNIA - DEPARTMENT OF TRANSPORTATION
Caltrans

LAST REVISION 00-00-00

DATE PLOTTED => 12/23/2009
TIME PLOTTED => 12:19:25 PM

FOR REDUCED PLANS ORIGINAL SCALE IS IN MILLIMETERS 0 20 40 60 80

DGN FILE =>t:\13103\ms\pse\SAS Struc\CCO\SAS CC079\2009-12-23_Issued for Submittal\04-0120F1_0382R03.dgn
USERNAME =>llorico

CU 04251 | EA 0120F1

CONDUIT DATA

Conduit No.	Reference	Size	Type	Total Fill (mm²)	Allowable Fill (mm²)	Included Cable No.	Conductor Type
3459A	E-265	41	RGS-PVC coated conduit	227.46	524.55	UP210-9	1-2C#8 + gnd, 600V, EPR insulation
							3
3464A	E-286	53	RGS-PVC coated conduit	286	879.42	UP210-1A-13&14	1-4C#8 + gnd, 600V, EPR insulation
3464B	E-286	53	RGS-PVC coated conduit	286	879.42	UP210-1A-13&14	1-4C#8 + gnd, 600V, EPR insulation
3501	E-279	53	RGS-PVC coated conduit	286	879.42	Pull Rope	Soft-Fiber Polyester
	E-284A					UP210-1A-1 & 6	1-4C #8 + gnd, 600V, EPR insulation
3502	E-264B, E-264D	78	RGS conduit	513.46	1935.24	Pull Rope	Soft-Fiber Polyester
						UP210-13 &17	1-4C #8 + gnd, 600V, EPR insulation
						UP210-1A-3	1-2C #8 + gnd, 600V, EPR insulation
3518	E-285C, E-285	53	RGS conduit	777.22	879.42	Pull Rope	Soft-Fiber Polyester
						UP210-1A-5	1-2C#12 + gnd, 600V, EPR insulation
						UP210-1A-3 & 4	1-4C #8 + gnd, 600V, EPR insulation
						UP210-1A-1 & 6	1-4C #8 + gnd, 600V, EPR insulation
						UP210-1B-5	1-2C#12 + gnd, 600V, EPR insulation
3519	E-285C, E-285	53	RGS conduit	858	879.42	Pull Rope	Soft-Fiber Polyester
						UP210-1A-9&10	1-4C#8 + gnd, 600V, EPR insulation
						UP210-1A-11&12	1-4C#8 + gnd, 600V, EPR insulation
						UP210-1A-13&14	1-4C#8 + gnd, 600V, EPR insulation
3520	E-285 E-279	53	RGS conduit	527.18	879.42	Pull Rope	Soft-Fiber Polyester
	E-285A					2123-2	1-3C + gnd, #2, 600V, EPR insulation
3524	E-285A E-279	27	RGS Conduit	133.19	229.03	Pull Rope	Soft-Fiber Polyester
						2123-2A	3 + 1 gnd, #6, 600V, RHH/RHW insulation
3525	E-285A E-279	41	RGS Conduit	271.48	534.55	Pull Rope	Soft-Fiber Polyester
						2123-2B	4 + 1 gnd, #4, 600V, RHH/RHW insulation
3521	E-285 E-279	53	RGS conduit	472.21	879.42	Pull Rope	Soft-Fiber Polyester
	E-285A, E-285C					UP210-1A-5	1-2C#12 + gnd, 600V, EPR insulation
						UP210-1A-3 & 4	4 + 1 gnd, #8, 600V, RHH/RHW insulation
						UP210-1A-1 & 6	4 + 1 gnd, #8, 600V, RHH/RHW insulation
3522	E-285 E-279	53	RGS conduit	858	879.42	Pull Rope	Soft-Fiber Polyester
	E-285A, E-285C					UP210-1A-9&10	1-4C#8 + gnd, 600V, EPR insulation
						UP210-1A-11&12	1-4C#8 + gnd, 600V, EPR insulation
						UP210-1A-13&14	1-4C#8 + gnd, 600V, EPR insulation
3523	E-285 E-279	41	RGS conduit	0.00	534.55	Pull Rope	Soft-Fiber Polyester
	E-285A						
3600	E-264B, E-278	78	RGS-PVC coated conduit	1254.38	1935.24	Pull Rope	Soft-Fiber Polyester
	E-284, E-264C					UP210-9	1-2C#8 + gnd, 600V, EPR insulation
						UP 210-15 & 19	1-4C#8 + gnd, 600V, EPR insulation
						UP210-5 & 7	1-4C#8 + gnd, 600V, EPR insulation
						UP210-22	1-2C#8 + gnd, 600V, EPR insulation
						UP210-24	1-2C#8 + gnd, 600V, EPR insulation
3601	E-279	41	RGS-PVC coated conduit	286	534.55	Pull Rope	Soft-Fiber Polyester
	E-284A					UP210-1A-11&12	1-4C #8 + gnd, 600V, EPR insulation

REQUEST FOR INFORMATION NOT ADDRESSED IN THIS CCO REMAIN IN FORCE

MARK	DATE	DESCRIPTIONS	BY	CH'D	CCO#
3	02/26/10	TOWER BASE MEP	JS TW	RG SYC	79
2	12/02/09	TOWER UTILITY PANELS	JS TW	RG FW	70
1	02/19/08	ELECTRICAL MODIFICATIONS	MP EL	RR	42

REVISIONS

CONTRACT CHANGE ORDER NO. 79
SHEET 15 OF 18

REGISTERED PROFESSIONAL ENGINEER — MARSELL FUMIO TAKAKI — No. E 8651 — Exp. 9/30/2008 — ELECTRICAL — STATE OF CALIFORNIA
FOR REVISION ONLY 1

REGISTERED PROFESSIONAL ENGINEER — FADI WALIEDDINE — No. 11465 — Exp. 12/31/2009 — ELECTRICAL — STATE OF CALIFORNIA
FOR REVISION ONLY 2

REGISTERED PROFESSIONAL ENGINEER — SYN YEE CHIN — No. 18186 — Exp. 09/30/2011 — ELECTRICAL — STATE OF CALIFORNIA
FOR REVISION ONLY 3

Caltrans Metric

DIST	COUNTY	ROUTE	KILOMETER POST TOTAL PROJECT	SHEET No	TOTAL SHEETS
04	SF	80	13.2/13.9	385 R3	1204

12/19/02
REGISTERED ELECTRICAL ENGINEER DATE

REGISTERED PROFESSIONAL ENGINEER — JENS ERLINGSSON — No. 8249 — Exp. 9/30/06 — ELECTRICAL — STATE OF CALIFORNIA

12-6-04
PLANS APPROVAL DATE

PB POWER, Inc.
A Parsons Brinckerhoff Company
303 Second St., Suite 700N
San Francisco, CA 94107-1317

The State of California or its officers or agents shall not be responsible for the accuracy or completeness of electronic copies of this plan sheet.

Caltrans now has a web site! To get to the web site, go to http://www.dot.ca.gov

CONDUIT DATA

Conduit No.	Reference	Size	Type	Total Fill (mm²)	Allowable Fill (mm²)	Included Cable No.	Conductor Type
3602	E-264B	78	RGS conduit	513.46	1935.24	Pull Rope	Soft-Fiber Polyester
						UP 210-15 & 19	1-4C#8 + gnd, 600V, EPR insulation
						UP210-1A-9	1-2C#8 + gnd, 600V, EPR insulation
3701	E-280	53	RGS-PVC coated conduit	572	879.42	Pull Rope	Soft-Fiber Polyester
	E-284A					UP 210-1B-1&6	1 - 4C#8 + gnd, 600V, EPR insulation
						UP210-1B-15&16	1 - 4C#8 + gnd, 600V, EPR insulation

For continuation, see next sheet.

CONDUIT AND TRAY SCHEDULE

E-430

STATE OF CALIFORNIA - DEPARTMENT OF TRANSPORTATION
Caltrans

DESIGN OVERSIGHT
BEHZAD GOLEMOHAMMADI

CALCULATED/ DESIGNED BY	PBP	DATE 8/02	REVISED BY
CHECKED BY	AB	8/02	DATE REVISED

LAST REVISION 00-00-00

DATE PLOTTED => 2/25/2010
TIME PLOTTED => 3:46:03 PM

FOR REDUCED PLANS ORIGINAL SCALE IS IN MILLIMETERS 0 20 40 60 80

DGN FILE =>t:\13103\ms\pse\SAS Struc\CCO\SAS CC079\2009-12-23_Issued for Submittal\04-0120f1_0385R03.dgn
USERNAME =>llorico

CU 04251
EA 0120F1

DIST.	COUNTY	ROUTE	KILOMETER POST TOTAL PROJECT	SHEET NO.	TOTAL SHEETS
04	SF	80	13.2/13.9	879R1	1204

REGISTERED ENGINEER - CIVIL

12-6-04

PLANS APPROVAL DATE

REGISTERED PROFESSIONAL ENGINEER Marwan N. Nader No. C 054426 Exp. 12/31/11 CIVIL STATE OF CALIFORNIA

The State of California or its officers or agents shall not be responsible for the accuracy or completeness of electronic copies of this plan sheet.

T.Y. LIN / MOFFATT & NICHOL
825 BATTERY STREET
SAN FRANCISCO, CA 94111

Caltrans now has a web site! To get to the web site, go to: http://www.dot.ca.gov

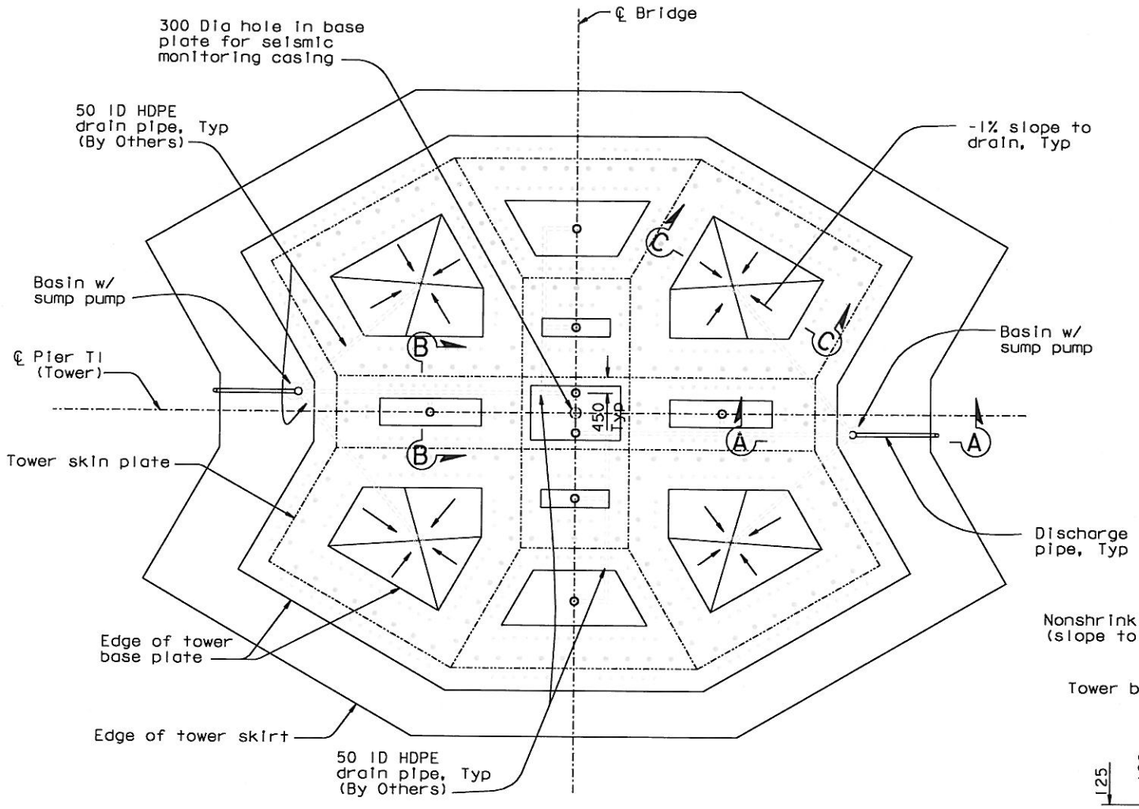

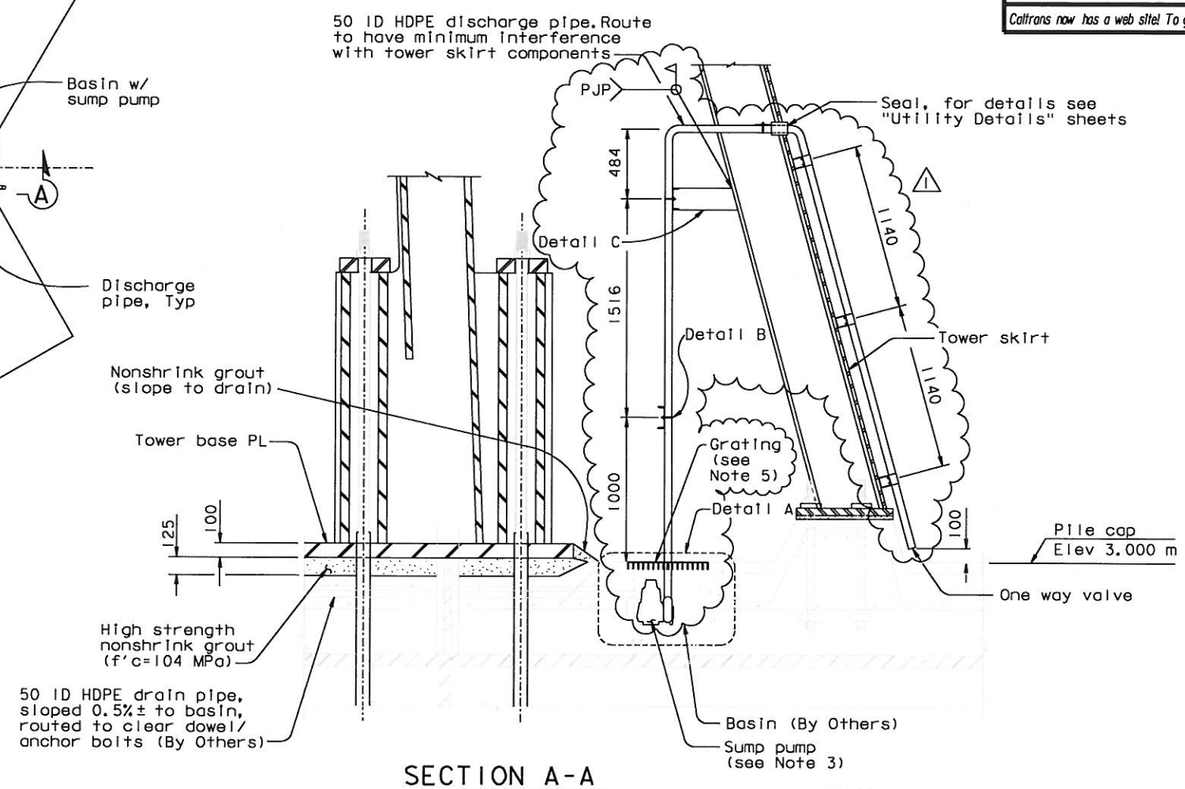

SECTION A-A

TYPICAL BASIN DETAILS

1:20

LEGEND:

- o Drain
- • Anchor bolts
- • Dowels
- Basin w/sump pump

NOTES:

1. For Detail A, Section B-B and Section C-C, see "Tower Drainage Details No.2" sheet.
2. For tower skirt details, see "Tower Skirt Details" sheets.
3. Sump pumps shall be Zoeller M98 or equivalent submersible, automatic sump pump.
4. For "Tower Drainage Details" sheets, the Contractor shall verify all controlling field dimensions before ordering or fabricating any material.
5. For grating details, see Note 6 of "Tower Access Details No.3" sheet.
6. For Detail B and Detail C, see "Tower Drainage Details No.1A" sheet.

CONTRACT CHANGE ORDER NO. 79
SHEET 16 OF 18

REQUESTS FOR INFORMATION NOT ADDRESSED IN THIS CCO REMAIN IN FORCE

ALL DIMENSIONS ARE IN MILLIMETERS UNLESS OTHERWISE SHOWN

R. Valizadeh/V. Toan/Y.L./W.L./F.C.
DESIGN OVERSIGHT
SIGN OFF DATE 06/18/10

MARK	DATE	DESCRIPTIONS	BY	CH'D	CCO#
1	06/18/10	TOWER BASE MEP	TH	MN	79

REVISIONS

	BY	CHECKED
DESIGN	M. Nader	G. Baker
DETAILS	L. Rus	G. Baker
QUANTITIES	L. Rus	G. Baker

PREPARED FOR THE STATE OF CALIFORNIA DEPARTMENT OF TRANSPORTATION

R. Manzanarez
PROJECT ENGINEER

BRIDGE NO. 34-0006L/R
KILOMETER POST 13.2/13.9

SAN FRANCISCO OAKLAND BAY BRIDGE
EAST SPAN SEISMIC SAFETY PROJECT
SELF-ANCHORED SUSPENSION BRIDGE
(SUPERSTRUCTURE & TOWER)

TOWER DRAINAGE DETAILS NO. 1

Rev. Date: 5-18-98

ORIGINAL SCALE IN MILLIMETERS FOR REDUCED PLANS 0 10 20 30 40 50 60 70 80 90 100

CU 04
EA 0120F1

DISREGARD PRINTS BEARING EARLIER REVISION DATES

REVISION DATES (PRELIMINARY STAGE ONLY) 05/15/99 09/28/99 05/31/01 01/08/02 07/01/02 12/13/02

SHEET 462R1 OF

FILE => I:\bb\04-012001\sas\contract plans and cco\cco\cco#79\4-revision 06-18-10\dgn\akdkd04.dgn

USERNAME => arivero DATE PLOTTED => 18 JUN 2010 TIME PLOTTED => 10:28:16

100 % PS&E

DIST.	COUNTY	ROUTE	KILOMETER POST TOTAL PROJECT	SHEET NO.	TOTAL SHEETS
04	SF	80	13.2/13.9	879S1	1204

REGISTERED ENGINEER - CIVIL

05-14-10

PLANS APPROVAL DATE

REGISTERED PROFESSIONAL ENGINEER Marwan N. Nader No. C 054426 Exp. 12/31/11 CIVIL STATE OF CALIFORNIA

The State of California or its officers or agents shall not be responsible for the accuracy or completeness of electronic copies of this plan sheet.

T.Y. LIN / MOFFATT & NICHOL
825 BATTERY STREET
SAN FRANCISCO, CA 94111

Caltrans now has a web site! To get to the web site, go to: http://www.dot.ca.gov

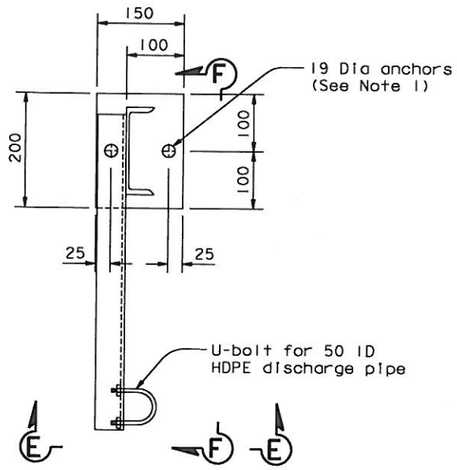

DETAIL B
1:5

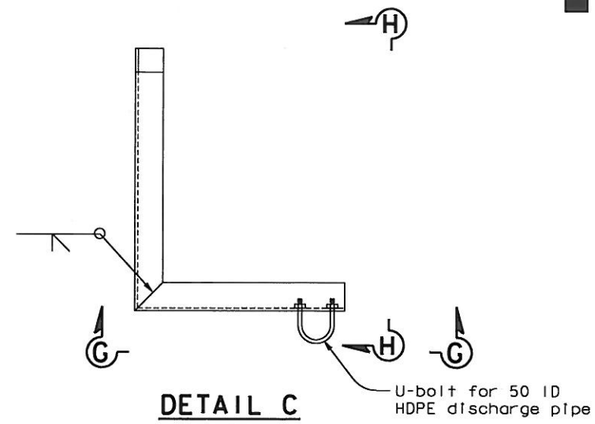

DETAIL C
1:5

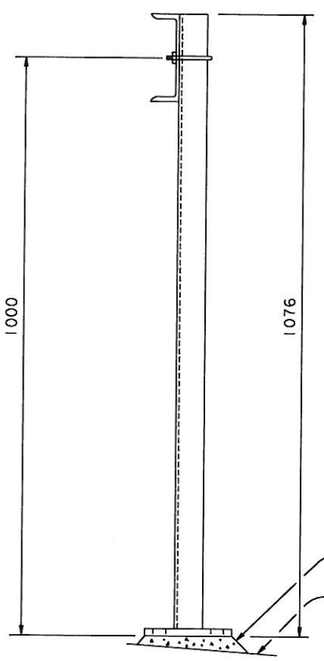

SECTION E-E
1:5

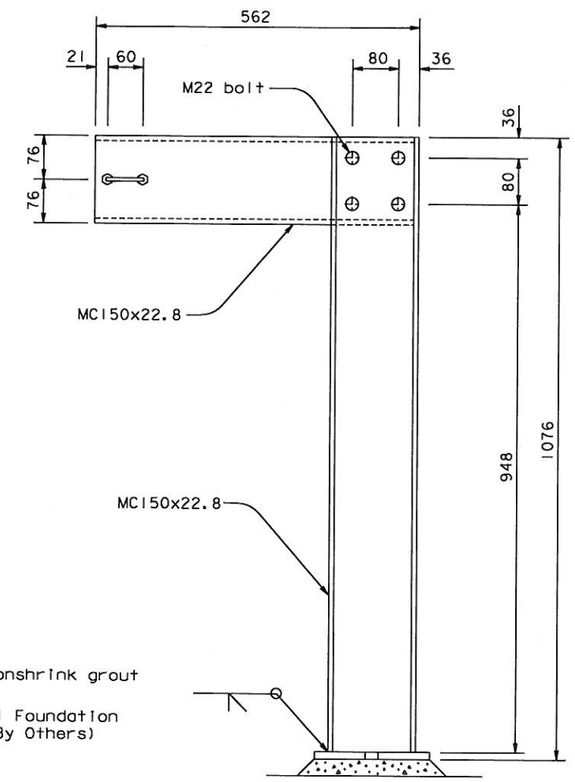

SECTION F-F
1:5

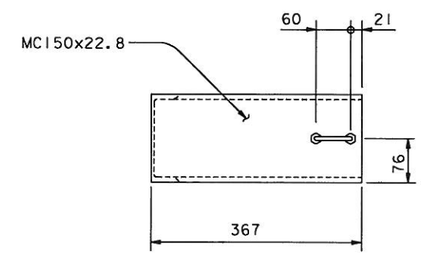

SECTION G-G
1:5

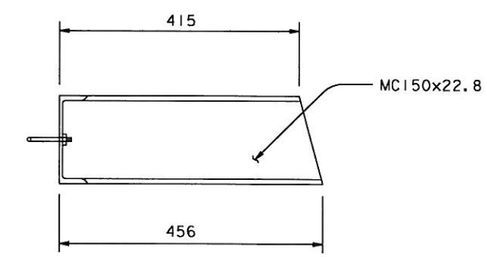

SECTION H-H
1:5

NOTES:

1. Support assembly shall be attahced to TI foundation with 19 Dia anchors. The Contractor shall use a nonshrink grout leveling pad to make support assembly level.

CONTRACT CHANGE ORDER NO. 79
SHEET 17 OF 18

REQUESTS FOR INFORMATION NOT ADDRESSED IN THIS CCO REMAIN IN FORCE

ALL DIMENSIONS ARE IN MILLIMETERS UNLESS OTHERWISE SHOWN

R. Vallizadeh/V. Toan/Y.L./W.L./F.C.
DESIGN OVERSIGHT
SIGN OFF DATE 05/14/10

MARK	DATE	DESCRIPTIONS	BY	CH'D	CCO#
0	05/14/10	TOWER BASE MEP	TH	MN	79

REVISIONS

Rev. Date: 5-18-98

DESIGN	BY T. Ho	CHECKED M. Nader	
DETAILS	BY T. Ho	CHECKED M. Nader	
QUANTITIES	BY T. Ho	CHECKED M. Nader	

PREPARED FOR THE STATE OF CALIFORNIA DEPARTMENT OF TRANSPORTATION

R. Manzanarez
PROJECT ENGINEER

BRIDGE NO. 34-0006L/R
KILOMETER POST 13.2/13.9

SAN FRANCISCO OAKLAND BAY BRIDGE
EAST SPAN SEISMIC SAFETY PROJECT
SELF-ANCHORED SUSPENSION BRIDGE
(SUPERSTRUCTURE & TOWER)

TOWER DRAINAGE DETAILS NO. 1A

ORIGINAL SCALE IN MILLIMETERS FOR REDUCED PLANS 0 10 20 30 40 50 60 70 80 90 100

CU 04
EA 0120F1

DISREGARD PRINTS BEARING EARLIER REVISION DATES → 05/07/10

REVISION DATES (PRELIMINARY STAGE ONLY)

SHEET 462S1 OF

FILE => I:\bb\04-012001\sas\contract plans and cco\cco\cco#79\3-revision 05-14-10\dgn\akdkd04a.dgn

100 % PS&E

USERNAME => arivero DATE PLOTTED => 13 MAY 2010 TIME PLOTTED => 10:34:57

DIST.	COUNTY	ROUTE	KILOMETER POST TOTAL PROJECT	SHEET NO.	TOTAL SHEETS
04	SF	80	13.2/13.9	880R1	1204

REGISTERED ENGINEER - CIVIL

12-6-04
PLANS APPROVAL DATE

PROFESSIONAL ENGINEER REGISTERED Marwan N. Nader No. C 054426 Exp. 12/31/11 CIVIL STATE OF CALIFORNIA

The State of California or its officers or agents shall not be responsible for the accuracy or completeness of electronic copies of this plan sheet.

T.Y. LIN / MOFFATT & NICHOL
825 BATTERY STREET
SAN FRANCISCO, CA 94111

Caltrans now has a web site! To get to the web site, go to: http://www.dot.ca.gov

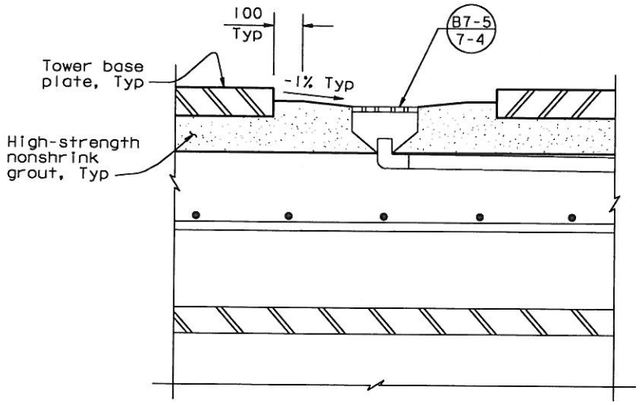

SECTION B-B

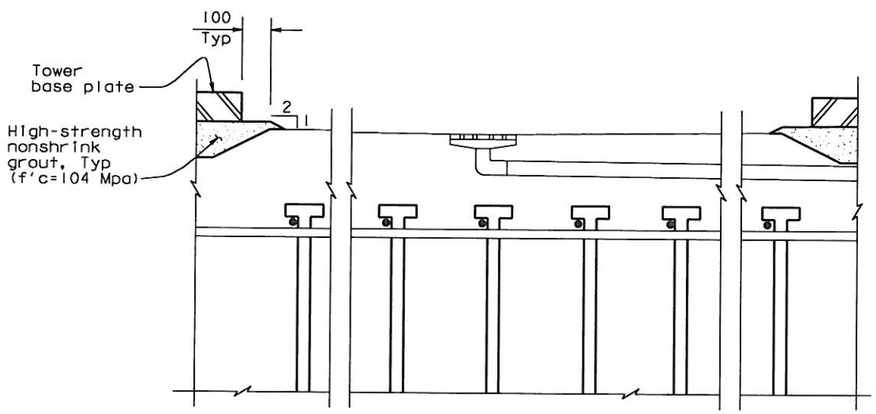

SECTION C-C

TYPICAL DRAIN DETAILS
1:10

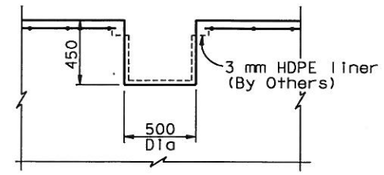

DETAIL A
1:20

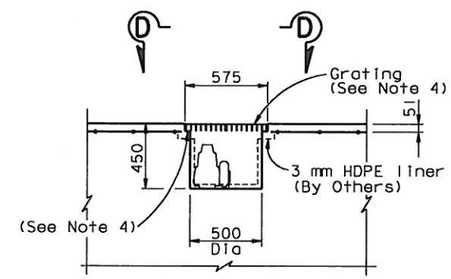

ALTERNATE DETAIL A
1:20

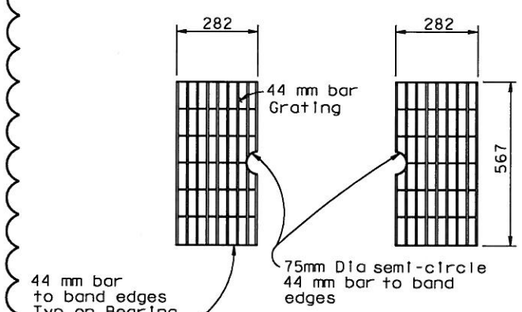

VIEW D-D
1:10

NOTES:

1. For tower footing details, see "Tower Footing Details" sheets.
2. Drain pipe and overflow pipe shall be high-density polyethylene (HDPE) pipe. Contractor shall remove drain cap (By Others) before installing area drain.
3. The Contractor shall embed area drain flush with high-strength grout and join to HDPE drain pipe using coupling, caulk, or high-strength grout as approved by the Engineer. The Contractor may supply alternative drainage details as approved by the Engineer.
4. Concrete cutout for the hot dipped galvanized grating shall be leveled with nonshrink grout to achieve proper elevation. Grating shall be fastened to concrete with threaded inserts.

100 % PS&E

CONTRACT CHANGE ORDER NO. 79
SHEET 18 OF 18

REQUESTS FOR INFORMATION NOT ADDRESSED IN THIS CCO REMAIN IN FORCE

ALL DIMENSIONS ARE IN MILLIMETERS UNLESS OTHERWISE SHOWN

MARK	DATE	DESCRIPTIONS	BY	CH'D	CCO#
1	05/14/10	TOWER BASE MEP	TH	MN	79

REVISIONS

R. Vallizadeh/V. Toan/Y.L./W.L./F.C.
DESIGN OVERSIGHT
SIGN OFF DATE 05/14/10

	BY	CHECKED
DESIGN	M. Nader	G. Baker
DETAILS	L. Rus	G. Baker
QUANTITIES	L. Rus	G. Baker

PREPARED FOR THE STATE OF CALIFORNIA DEPARTMENT OF TRANSPORTATION

R. Manzanarez
PROJECT ENGINEER

BRIDGE NO. 34-0006L/R
KILOMETER POST 13.2/13.9

SAN FRANCISCO OAKLAND BAY BRIDGE
EAST SPAN SEISMIC SAFETY PROJECT
SELF-ANCHORED SUSPENSION BRIDGE
(SUPERSTRUCTURE & TOWER)

TOWER DRAINAGE DETAILS NO. 2

Rev. Date: 5-18-98

ORIGINAL SCALE IN MILLIMETERS FOR REDUCED PLANS 0 10 20 30 40 50 60 70 80 90 100

CU 04
EA 0120F1

DISREGARD PRINTS BEARING EARLIER REVISION DATES

REVISION DATES (PRELIMINARY STAGE ONLY) 05/27/01 04/08/02 07/09/02 12/19/02

SHEET 463R1 OF

FILE => I:\bb\04-012001\sas\contract plans and cco\cco\cco#79\3-revision 05-14-10\dgn\akdkd05.dgn

USERNAME => arivera DATE PLOTTED => 13 MAY 2010 TIME PLOTTED => 10:10:27