DIST.	COUNTY	ROUTE	KILOMETER POST TOTAL PROJECT	SHEET NO.	TOTAL SHEETS
04	SF	80	13.2/13.9	737R1	1204

Caltrans Metric

George Baker
REGISTERED ENGINEER - CIVIL
12-6-04
PLANS APPROVAL DATE

REGISTERED PROFESSIONAL ENGINEER George S. Baker No. C57112 Exp. 12/31/05 CIVIL STATE OF CALIFORNIA

The State of California or its officers or agents shall not be responsible for the accuracy or completeness of electronic copies of this plan sheet.

T.Y. LIN / MOFFATT & NICHOL
825 BATTERY STREET
SAN FRANCISCO, CA 94111

Caltrans now has a web site! To get to the web site, go to: http://www.dot.ca.gov

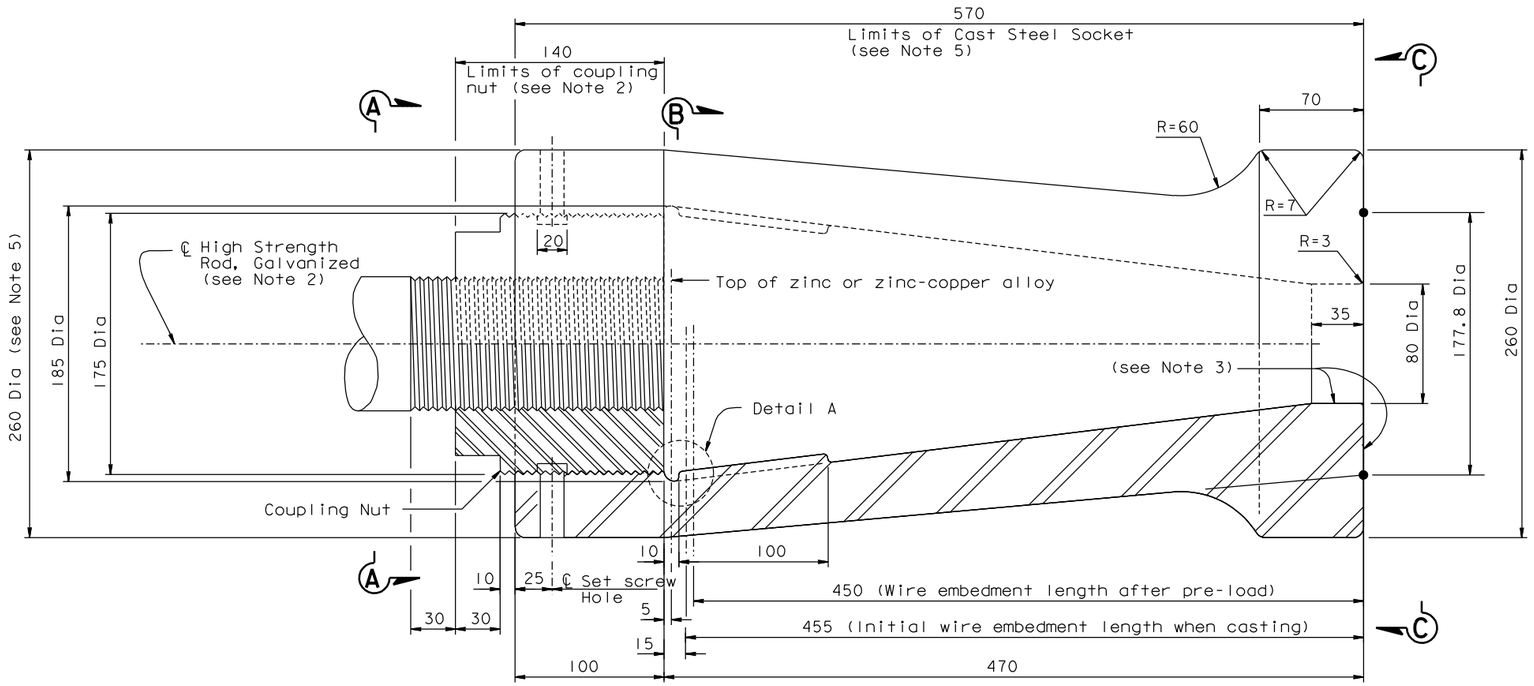

SOCKET DETAIL
1:2

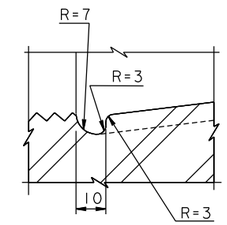

DETAIL A
1:1

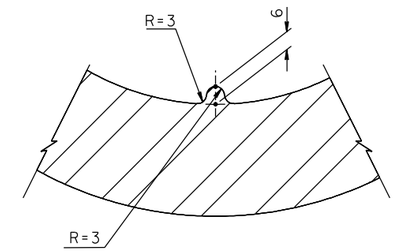

DETAIL B
1:1

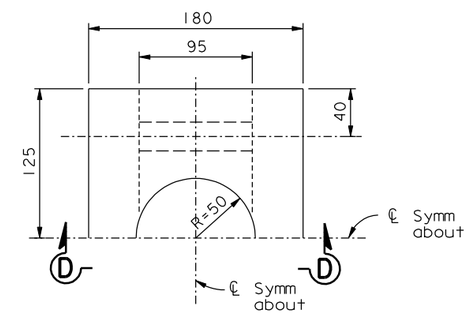

PLAN

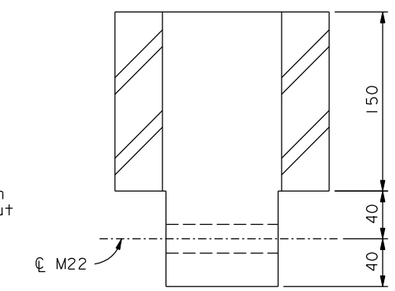

SECTION D-D

BEARING BLOCK DETAIL (See Note 6) △1
1:2.5

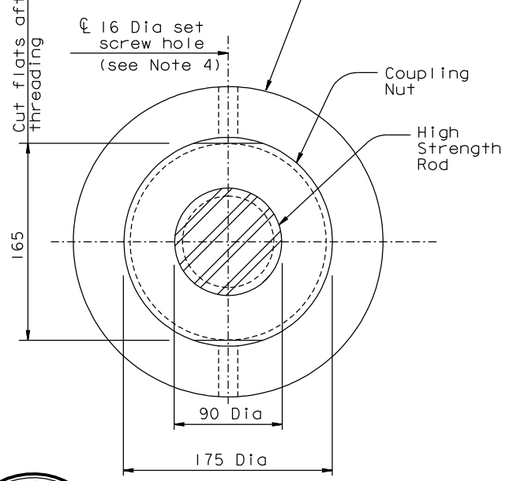

VIEW A-A
1:2.5

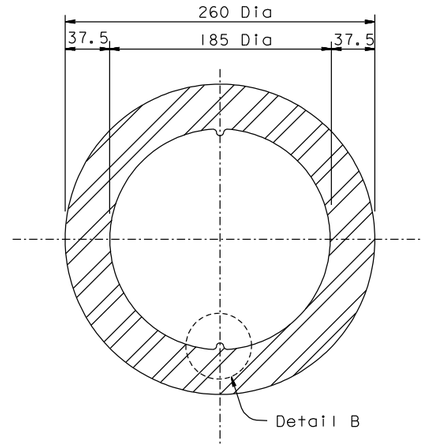

SECTION B-B
1:2.5

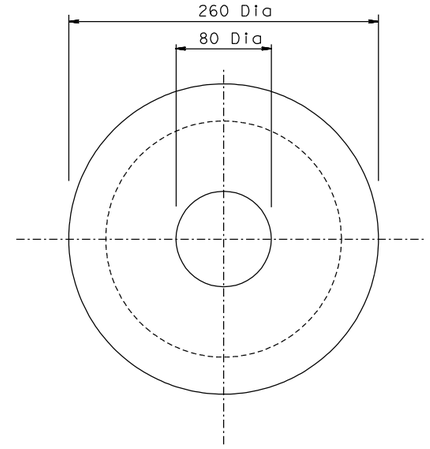

VIEW C-C
1:2.5

NOTES:

1. Coupling nut and socket shall conform to ASTM A194 GR 7, with 4 threads per inch.
2. For main cable strand anchor rod and cable strand socket materials, see "General Notes" sheets.
3. Surface shall be finished to ANSI 500.
4. Provide 16 Dia stainless set screws in threaded hole.
5. All socket dimensions are for information only. The Contractor shall develop socket details consistent with his means and methods and the east cable anchorage geometry, and shall submit them to the Engineer for review and approval. The socket dimensions shall be such that adequate prestressing and erection clearance is provided.
6. △1 Material for bearing blocks shall be ASTM A668 Grade F, or ASTM A148 Grade 550-345.

REGISTERED PROFESSIONAL ENGINEER Daniel J. Turner No. C 65033 Exp. 06/30/11 CIVIL STATE OF CALIFORNIA

FOR REVISIONS ONLY

CONTRACT CHANGE ORDER NO. ____
SHEET ___ OF ___

REQUESTS FOR INFORMATION NOT ADDRESSED IN THIS CCO REMAIN IN FORCE

ALL DIMENSIONS ARE IN MILLIMETERS UNLESS OTHERWISE SHOWN

R. Valizadeh/V. Toan/Y.L./W.L./F.C.
DESIGN OVERSIGHT
Roya Valizadeh / Vong D. Toan / Y. Liu
SIGN OFF DATE 08/28/09

MARK	DATE	DESCRIPTIONS	BY	CH'D	CCO#
△1	08/28/09	BEARING BLOCKS	DT	GB	78

REVISIONS

	BY	CHECKED
DESIGN	G. Baker	J. Kuliki
DETAILS	M. Gulyas	T. McMeans
QUANTITIES	M. Gulyas	M. Roberts

PREPARED FOR THE STATE OF CALIFORNIA DEPARTMENT OF TRANSPORTATION

R. Manzanarez
PROJECT ENGINEER

BRIDGE NO. 34-0006L/R
KILOMETER POST 13.2/13.9

SAN FRANCISCO OAKLAND BAY BRIDGE
EAST SPAN SEISMIC SAFETY PROJECT
SELF-ANCHORED SUSPENSION BRIDGE
(SUPERSTRUCTURE & TOWER)

EAST CABLE ANCHORAGE DETAILS

Rev. Date: 5-18-98

ORIGINAL SCALE IN MILLIMETERS FOR REDUCED PLANS 0 10 20 30 40 50 60 70 80 90 100

CU 04
EA 0120F1

DISREGARD PRINTS BEARING EARLIER REVISION DATES

REVISION DATES (PRELIMINARY STAGE ONLY): 08/07/99 05/21/01 04/08/02 07/01/02 12/19/02

SHEET 320R1 OF

FILE => I:\bb\04-01200I\sas\contract plans and cco\cco\cco=78\I-original 08-28-09\dgn\agand08a.dgn

100% PS&E

USERNAME => dwinrow DATE PLOTTED => 27 AUG 2009 TIME PLOTTED => 15:37:06