DIST	COUNTY	ROUTE	KILOMETER POST TOTAL PROJECT	SHEET No	TOTAL SHEETS
04	SF	80	13.2/13.9	271 R3	1204

REGISTERED ELECTRICAL ENGINEER 12/19/02 DATE

12-6-04
PLANS APPROVAL DATE

REGISTERED PROFESSIONAL ENGINEER JENS ERLINGSSON No. 8249 Exp. 9/30/06 ELECTRICAL STATE OF CALIFORNIA

PB POWER, Inc.
A Parsons Brinckerhoff Company
303 Second St., Suite 700N
San Francisco, CA 94107-1317

The State of California or its officers or agents shall not be responsible for the accuracy or completeness of electronic copies of this plan sheet.

Caltrans now has a web site! To get to the web site, go to http://www.dot.ca.gov

Caltrans Metric

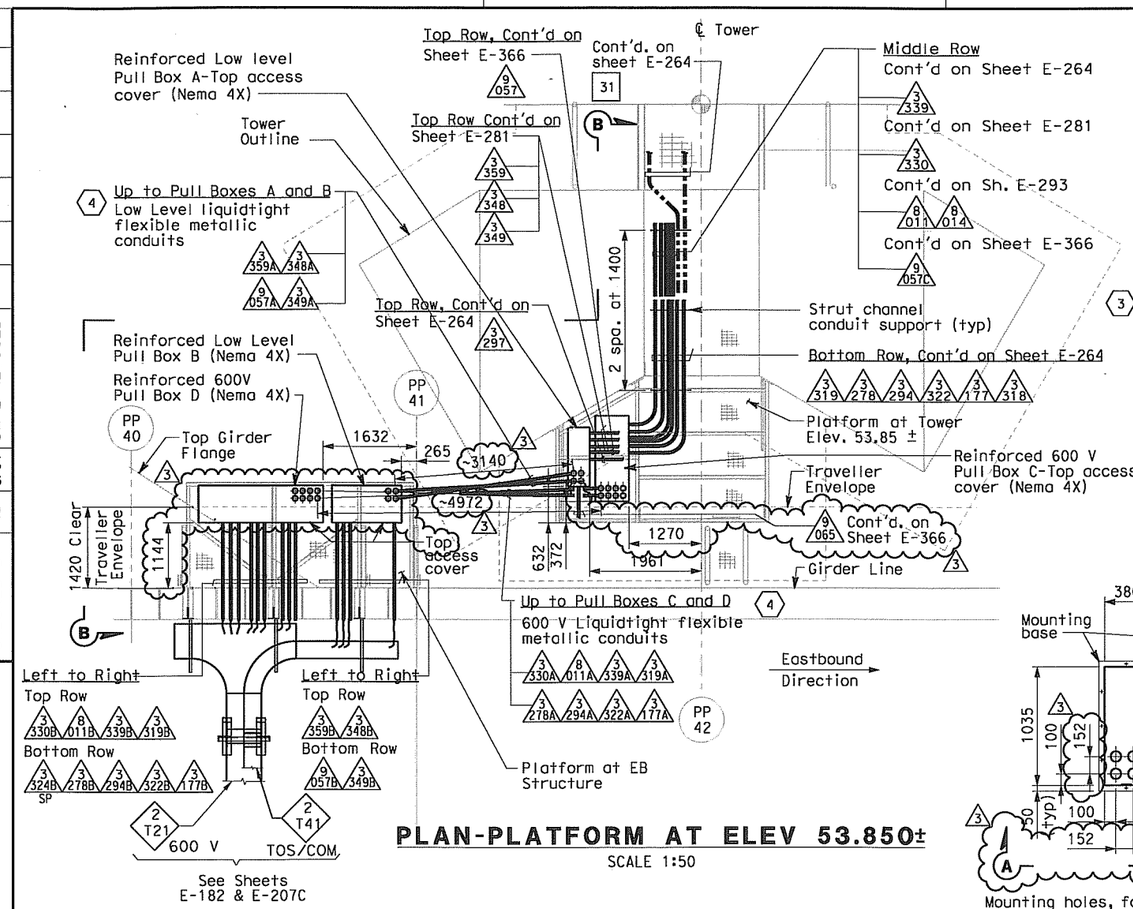

PLAN-PLATFORM AT ELEV 53.850±

SCALE 1:50

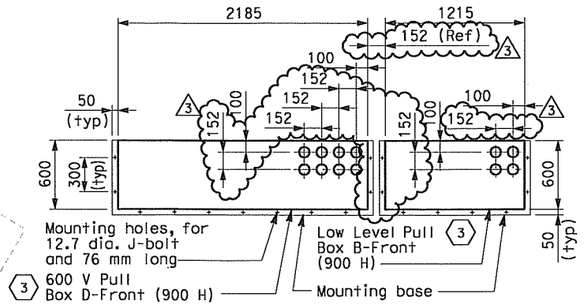

DETAIL 1

BOTTOM PLAN OF PULL BOXES LOCATED AT EB STRUCTURE PLATFORM
SCALE 1:25

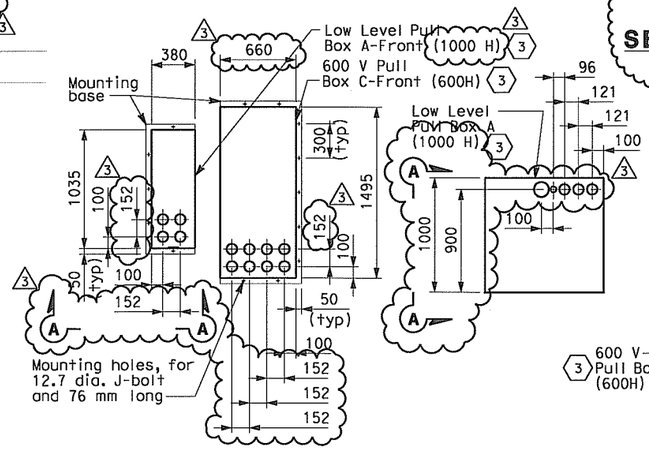

DETAIL 2

BOTTOM PLAN OF PULL BOXES LOCATED AT TOWER PLATFORM
SCALE 1:25

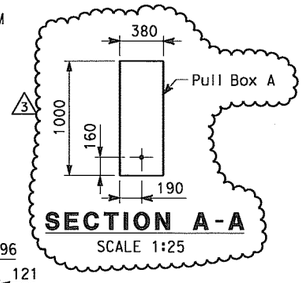

SECTION A-A

SCALE 1:25

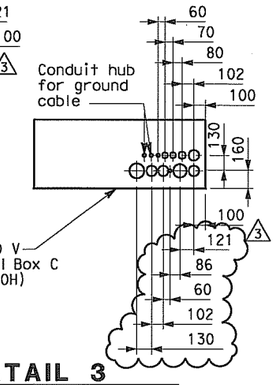

DETAIL 3

FRONT ELEVATION OF PULL BOXES LOCATED AT TOWER PLATFORM
SCALE 1:25

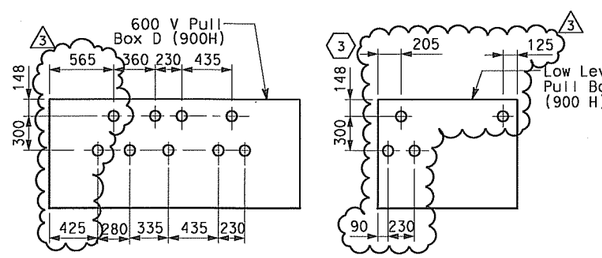

DETAIL 4

FRONT ELEVATION OF PULL BOXES LOCATED AT EB STRUCTURE PLATFORM
SCALE 1:25

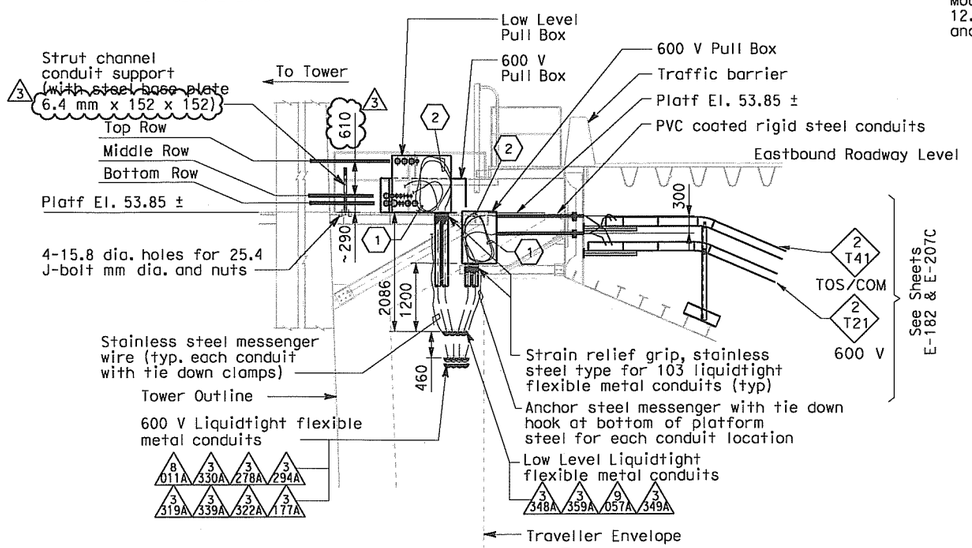

SECTION B

SCALE 1:50

SHEET NOTES

1. Coil 3 meters long of cable for each circuits inside the pull boxes.
2. Provide hooked cable support grips for cable or groups of cables at each liquidtight flexible metallic conduit inside the pull box.
3. Pull Box shall be fabricated of Nema 4X stainless steel, type 304. Pull Box shall be of reinforced construction to provide vertical support at bottom side of box for weighted conduit and cables inside. The top side of the Pull Box shall be reinforced and provided with hooks for cable support grips inside the pull box.
4. Electrical conduit design between Eastbound Structure and Main Tower is based on the maximum expansion of 1000 mm all directions.

NOTES

1. For location of sleeves Eastbound Structure PP-40 and PP-41, see Structural Plans.
2. Each liquidtight flexible metallic conduit shall be provided with #6 green insulated ground conductor outside the conduit.

REGISTERED PROFESSIONAL ENGINEER FADI WALIEDDINE No. 11465 Exp. 12/31/2009 ELECTRICAL STATE OF CALIFORNIA

FOR REVISION ONLY

REQUEST FOR INFORMATION NOT ADDRESSED IN THIS CCO REMAIN IN FORCE

MARK	DATE	DESCRIPTIONS	BY	CH'D	CCO#
3	10/03/08	STRONG MOTION SYSTEM	TW	RG FW	74
2	02/25/08	CABLE TRAY CHANGES	MP	RG SE	42S1
1	02/19/08	ELECTRICAL MODIFICATIONS	MP EL	RR	42

REVISIONS

CONTRACT CHANGE ORDER NO. 74
SHEET 3 OF 27

DETAILS
TOWER AND SUSPENSION CABLE

SCALE: AS NOTED

E-264A

THIS PLAN ACCURATE FOR ELECTRICAL WORK ONLY.

ALL DIMENSIONS ARE IN MILLIMETERS UNLESS OTHERWISE SHOWN.

DATE	BY	REVISED	DATE	BY	REVISED
3/04	EJL	JE			

CALCULATED/DESIGNED BY EJL CHECKED BY JE

DESIGN OVERSIGHT BEHZAD GOLEMOHAMMADI

STATE OF CALIFORNIA - DEPARTMENT OF TRANSPORTATION Caltrans

LAST REVISION 00-00-00

DATE PLOTTED => 10/3/2008
TIME PLOTTED => 4:15:09 PM

FOR REDUCED PLANS ORIGINAL SCALE IS IN MILLIMETERS 0 20 40 60 80

DGN FILE =>T:\13103\MS\pse\SAS Struc\CCO\SAS CCO74\Issued for Submittal 2008-10-03\04-0120f1_0271R03.dgn
USERNAME =>garciar

CU 04251 EA 0120F1

DIST	COUNTY	ROUTE	KILOMETER POST TOTAL PROJECT	SHEET No	TOTAL SHEETS
04	SF	80	13.2/13.9	329 R1	1204

REGISTERED ELECTRICAL ENGINEER 12/19/02 DATE

12-6-04
PLANS APPROVAL DATE

REGISTERED PROFESSIONAL ENGINEER JENS ERLINGSSON No. 8249 Exp. 9/30/06 ELECTRICAL STATE OF CALIFORNIA

PB POWER, Inc.
A Parsons Brinckerhoff Company
303 Second St., Suite 700N
San Francisco, CA 94107-1317

The State of California or its officers or agents shall not be responsible for the accuracy or completeness of electronic copies of this plan sheet.

Caltrans now has a web site! To get to the web site, go to: http://www.dot.ca.gov

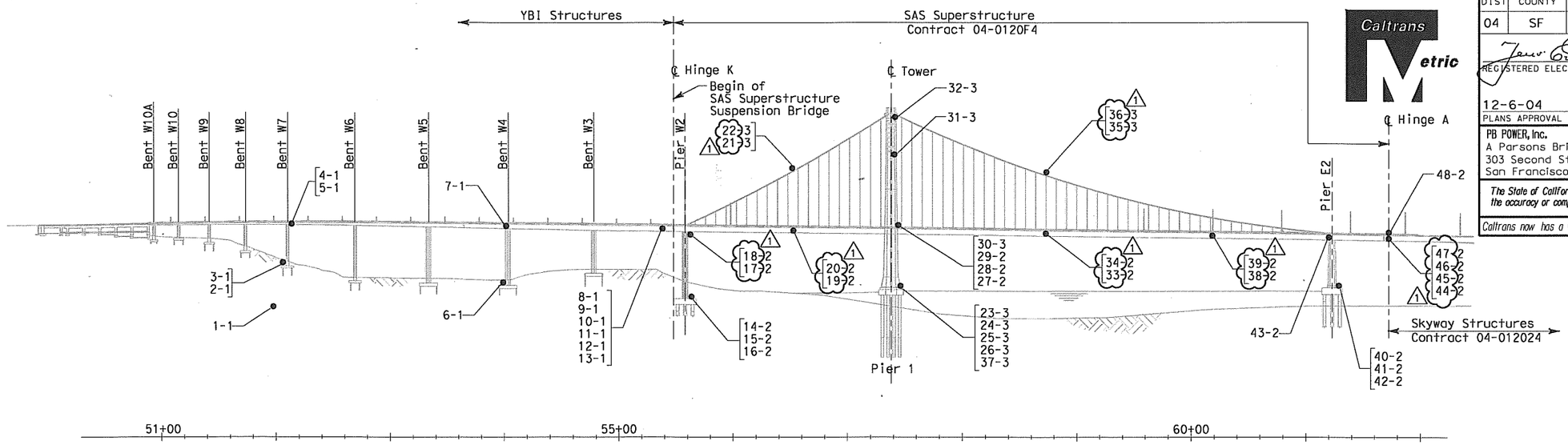

ELEVATION

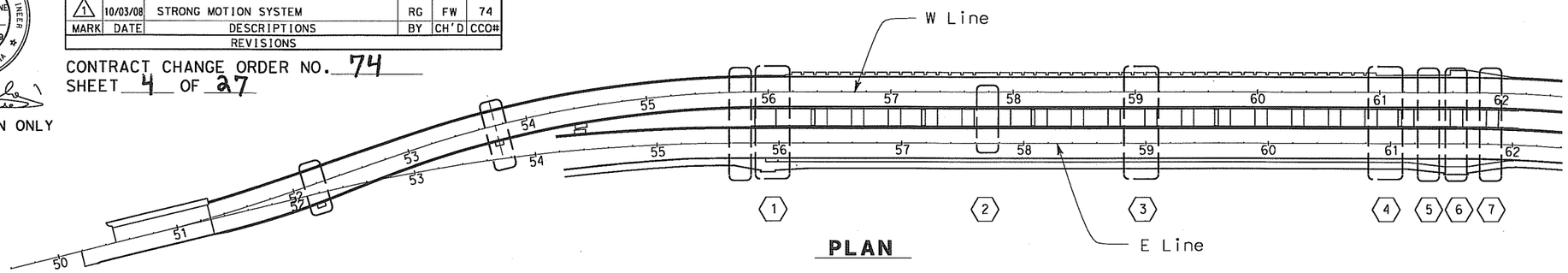

PLAN

REGISTERED PROFESSIONAL ENGINEER FADI WALIEDDINE No. 11465 Exp. 12/31/2009 ELECTRICAL STATE OF CALIFORNIA

FOR REVISION ONLY

REQUEST FOR INFORMATION NOT ADDRESSED IN THIS CCO REMAIN IN FORCE

MARK	DATE	DESCRIPTIONS	BY	CH'D	CCO#
1	10/03/08	STRONG MOTION SYSTEM	RG	FW	74

REVISIONS

CONTRACT CHANGE ORDER NO. 74
SHEET 4 OF 27

GENERAL NOTES:

1. Install strong motion sensor cables continuous without splices from strong motion sensor enclosure to the strong motion recorder boxes. No splices or taps are permitted.
2. Provide 600 mm slack in each strong motion sensor cable inside each strong motion sensor enclosure box, junction box and pull box.
3. Provide 700 mm slack in each strong motion sensor cable inside each strong motion recorder box enclosure.
4. Unless otherwise shown or specified, all strong motion junction boxes shall be stainless steel NEMA Type 4X with hinged door and door clamps.
5. Install a stainless steel NEMA Type 4X pull box every 180 meters along horizontal conduit runs.and every 45 meters along vertical runs. Each of these pull boxes shall be 304 mm x 304 mm x 152 mm (unless noted otherwise) with a hinged door and door clamps. Pull boxes are not shown on the plans for clarity.
6. Install stress relief cable support straps in all boxes along vertical runs.
7. Install Strong Motion Recorders #2 box A, #2-box B and #3 enclosures on service platform #5 (shown on sheet E-72), and tower (shown on sheet E-366), respectively.
8. For other work related not shown on this drawing, see electrical special provisions.
9. References:
   - For cable block diagrams, see sheets E-382, E-383 and E-384.
   - For strong motion sensor enclosures, see sheets E-377 and E-378.
10.

SHEET NOTES:

(1) For locations of sensors at Pier W2 see sheets E-362 and E-363.

(2) For locations of sensors at mid point between W2 and Tower see sheets E-364 and E-365.

(3) For locations of sensors at Tower see sheets E-366, E-367 and E-368.

(4) For locations of sensors at 1/3 distance between Tower and Pier E2 see sheets E-365 and E-369.

(5) For locations of sensors at 2/3 distance between Tower and Pier E2 see sheet E-370.

(6) For locations of sensors at Pier E2 see sheets E-371 and E-372.

(7) For locations of sensors at Hinge A see sheets E-373 and E-374.

STRONG MOTION DETECTION SYSTEM
GENERAL PLAN AND ELEVATION
SCALE: 1:2000

E-361

THIS PLAN IS ACCURATE FOR ELECTRICAL WORK ONLY.

ALL DIMENSIONS ARE IN METERS UNLESS OTHERWISE SHOWN.

FOR REDUCED PLANS ORIGINAL SCALE IS IN MILLIMETERS 0 20 40 60 80

DGN FILE =>T:\13103\MS\pse\SAS Struc\CCO\SAS CCO74\Issued for Submittal 2008-10-03\04-0120f1_0329R01.dgn
USERNAME =>garciar

CU 04251 | EA 0120F1

DATE PLOTTED => 10/3/2008
TIME PLOTTED => 4:15:55 PM

LAST REVISION 00-00-00

STATE OF CALIFORNIA - DEPARTMENT OF TRANSPORTATION
Caltrans

DESIGN OVERSIGHT
BEHZAD GOLEMOHAMMADI

CALCULATED/ DESIGNED BY	JW	DATE 11/01	REVISED BY
CHECKED BY	FK	2/02	DATE REVISED

DIST	COUNTY	ROUTE	KILOMETER POST TOTAL PROJECT	SHEET No	TOTAL SHEETS
04	SF	80	13.2/13.9	330 R1	1204

REGISTERED ELECTRICAL ENGINEER 12/19/02 DATE

12-6-04
PLANS APPROVAL DATE

REGISTERED PROFESSIONAL ENGINEER JENS ERLINGSSON No. 8249 Exp. 9/30/06 ELECTRICAL STATE OF CALIFORNIA

PB POWER, Inc.
A Parsons Brinckerhoff Company
303 Second St., Suite 700N
San Francisco, CA 94107-1317

The State of California or its officers or agents shall not be responsible for the accuracy or completeness of electronic copies of this plan sheet.

Caltrans now has a web site! To get to the web site, go to: http://www.dot.ca.gov

Caltrans Metric

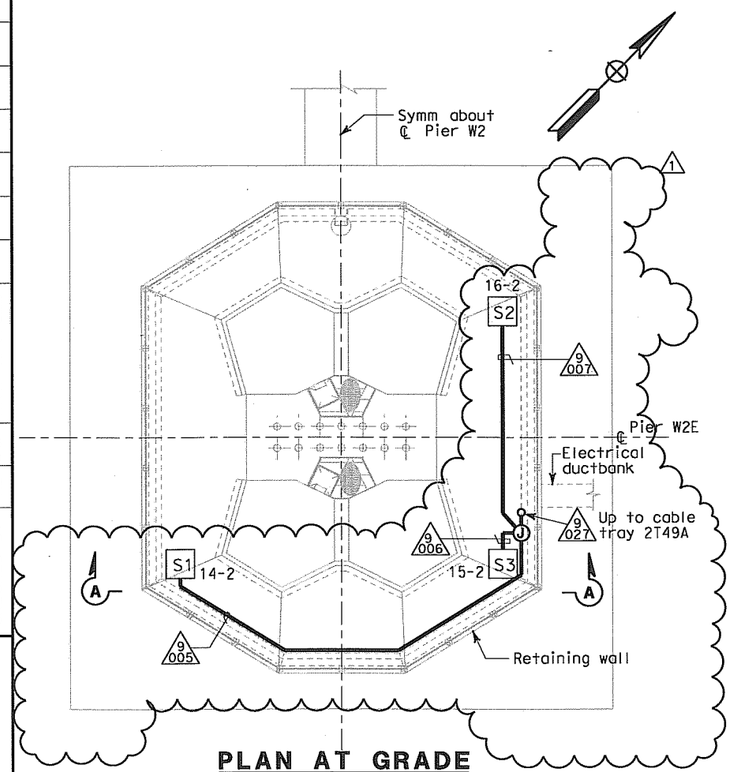

PLAN AT GRADE

SCALE 1:100

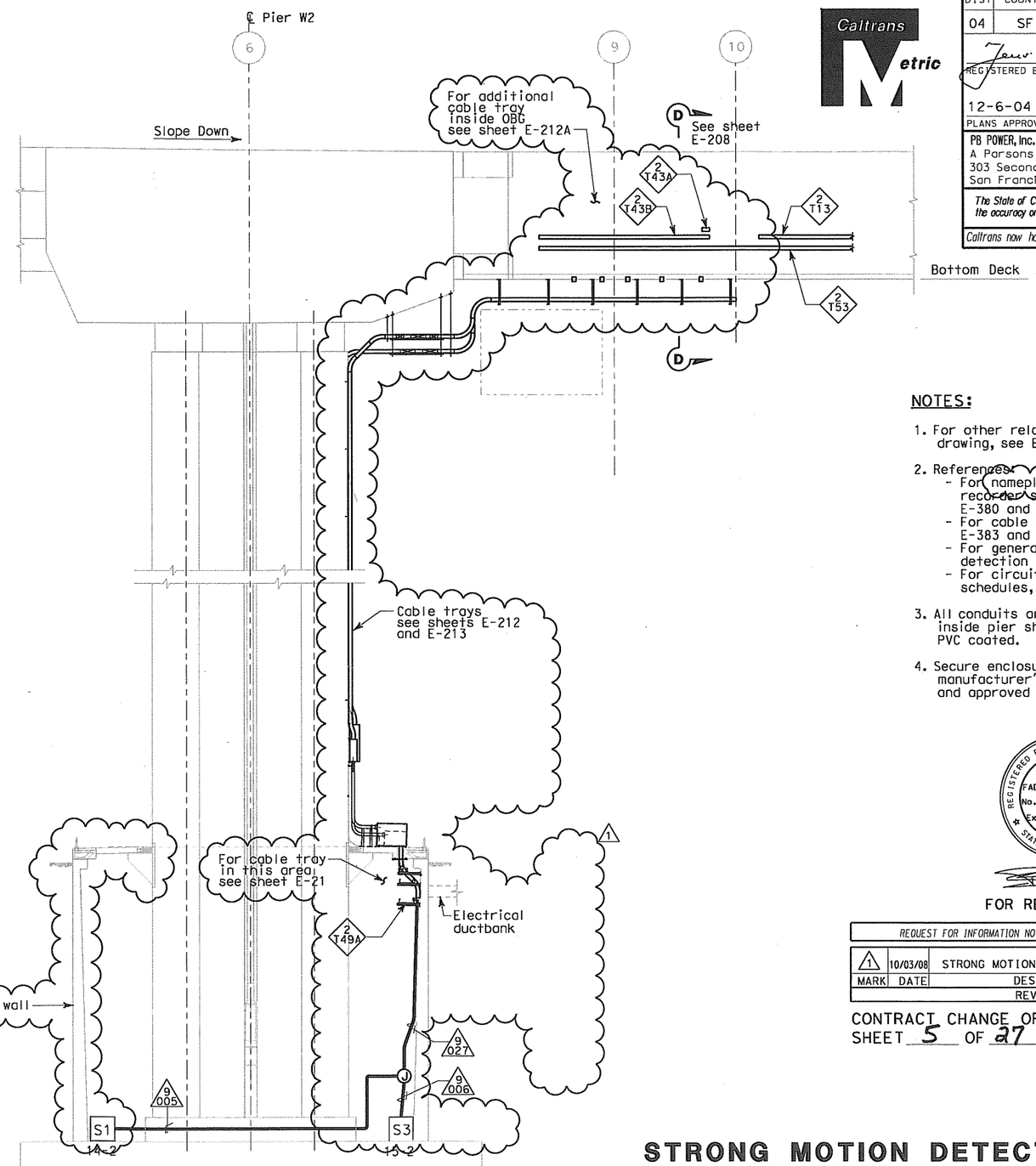

SECTION A-A

SCALE 1:100

NOTES:

1. For other related work not shown on this drawing, see Electrical Special Provisions.
2. References:
   - For nameplates, sensor enclosures and recorder schedules see sheets E-379, E-380 and E-381.
   - For cable block diagram, see sheets E-382, E-383 and E-384.
   - For general notes of the strong motion detection system, see sheet E-361.
   - For circuit and conduit/cable tray schedules, see sheets starting at E-401.
3. All conduits and fittings located outside or inside pier shall be rigid galvanized steel, PVC coated.
4. Secure enclosure to concrete wall with manufacturer's recommended mounting and approved by the Engineer.

REGISTERED PROFESSIONAL ENGINEER FADI WALIEDDINE No. 11465 Exp. 12/31/2009 ELECTRICAL STATE OF CALIFORNIA

FOR REVISION ONLY

REQUEST FOR INFORMATION NOT ADDRESSED IN THIS CCO REMAIN IN FORCE

MARK	DATE	DESCRIPTIONS	BY	CH'D	CCO#
1	10/03/08	STRONG MOTION SYSTEM	RG	FW	74

REVISIONS

CONTRACT CHANGE ORDER NO. 74
SHEET 5 OF 27

STRONG MOTION DETECTION SYSTEM
SAS SUPERSTRUCTURE
PIER W2E FOOTER CONDUIT AND SENSOR LOCATION

SCALE AS NOTED

SAS SUPERSTRUCTURE DETAILS OF CONDUIT RISER UP TO W2 EB

E-362

DATE	REVISED BY	DATE REVISED
11/01	KG	11/01

CALCULATED/DESIGNED BY: KG
CHECKED BY: AB

DESIGN OVERSIGHT: BEHZAD GOLEMOHAMMADI

STATE OF CALIFORNIA - DEPARTMENT OF TRANSPORTATION
Caltrans

THIS PLAN IS ACCURATE FOR ELECTRICAL WORK ONLY.

ALL DIMENSIONS ARE IN MILLIMETERS UNLESS OTHERWISE SHOWN.

FOR REDUCED PLANS ORIGINAL SCALE IS IN MILLIMETERS 0 20 40 60 80

DGN FILE =>T:\13103\MS\pse\SAS Struc\CCO\SAS CCO74\Issued for Submittal 2008-10-03\04-0120f1_0330R01.dgn
USERNAME =>garciar

CU 04251 | EA 0120F1

LAST REVISION 00-00-00
DATE PLOTTED => 10/3/2008
TIME PLOTTED => 4:16:36 PM

DIST	COUNTY	ROUTE	KILOMETER POST TOTAL PROJECT	SHEET No	TOTAL SHEETS
04	SF	80	13.2/13.9	331 R1	1204

REGISTERED ELECTRICAL ENGINEER 12/19/02 DATE

12-6-04
PLANS APPROVAL DATE

REGISTERED PROFESSIONAL ENGINEER JENS ERLINGSSON No. 8249 Exp. 9/30/06 ELECTRICAL STATE OF CALIFORNIA

PB POWER, Inc.
A Parsons Brinckerhoff Company
303 Second St., Suite 700N
San Francisco, CA 94107-1317

The State of California or its officers or agents shall not be responsible for the accuracy or completeness of electronic copies of this plan sheet.

Caltrans now has a web site! To get to the web site, go to: http://www.dot.ca.gov

Caltrans Metric

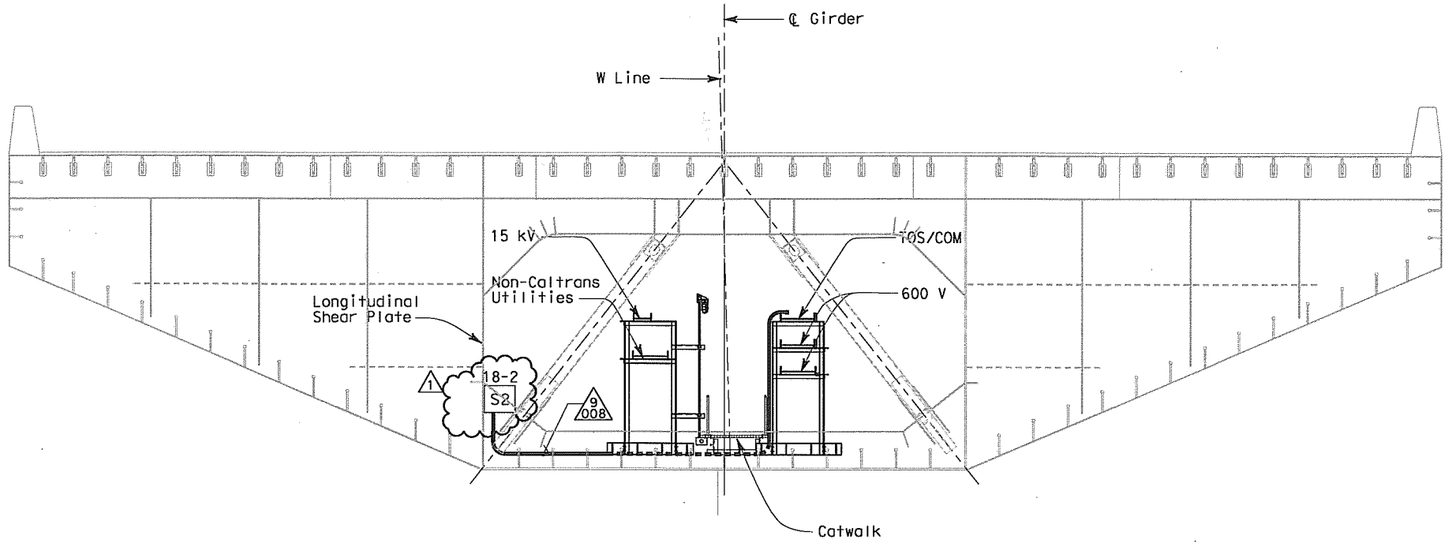

WESTBOUND SAS SUPERSTRUCTURE GIRDER SECTION @ PANEL POINT 8 1

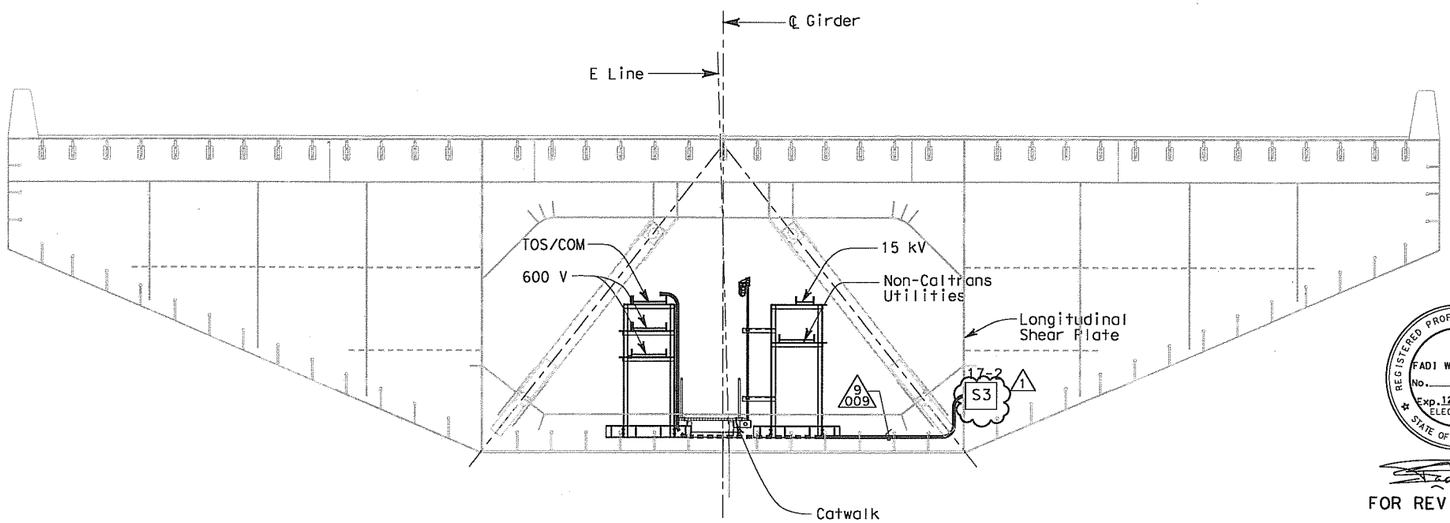

EASTBOUND SAS SUPERSTRUCTURE GIRDER SECTION @ PANEL POINT 8 1

NOTES:

1. For other related work not shown on this drawing, see Electrical Special Provisions.
2. References: 1
   - For nameplates, sensor enclosures and recorder schedules, see sheets E-379, E-380 and E-381.
   - For cable block diagram, see sheets E-382, E-383 and E-384.
   - For general notes of the strong motion detection system, see sheet E-361.
   - For circuit and conduit/cable tray schedules, see sheets starting at E-401.

REGISTERED PROFESSIONAL ENGINEER FADI WALIEDDINE No. 11465 Exp. 12/31/2009 ELECTRICAL STATE OF CALIFORNIA

FOR REVISION ONLY

REQUEST FOR INFORMATION NOT ADDRESSED IN THIS CCO REMAIN IN FORCE

MARK	DATE	DESCRIPTIONS	BY	CH'D	CCO#
1	10/03/08	STRONG MOTION SYSTEM	RG	FW	74

REVISIONS

CONTRACT CHANGE ORDER NO. 74
SHEET 6 OF 27

STRONG MOTION DETECTION SYSTEM
SAS SUPERSTRUCTURE
PIER W2 GIRDER CONDUIT AND SENSOR LOCATION
SCALE 1:50

E-363

THIS PLAN IS ACCURATE FOR ELECTRICAL WORK ONLY.

1	10/03/08	STRONG MOTION SYSTEM	RG FW 74
MARK	DATE	DESCRIPTIONS	BY CH'D CCO#

REVISIONS

CALCULATED/DESIGNED BY	KG	11/01	REVISED BY	IAH
CHECKED BY	AB	12/01	DATE REVISED	3/04

DESIGN OVERSIGHT
BEHZAD GOLEMOHAMMADI

STATE OF CALIFORNIA - DEPARTMENT OF TRANSPORTATION
Caltrans

FOR REDUCED PLANS ORIGINAL SCALE IS IN MILLIMETERS 0 20 40 60 80

DGN FILE =>T:\13103\MS\pse\SAS Struc\CCO\SAS CCO74\Issued for Submittal 2008-10-03\04-0120f1_0331R01.dgn
USERNAME =>garcior

CU 04251 | EA 0120F1

LAST REVISION 00-00-00
DATE PLOTTED => 10/3/2008
TIME PLOTTED => 4:17:08 PM

DIST	COUNTY	ROUTE	KILOMETER POST TOTAL PROJECT	SHEET No	TOTAL SHEETS
04	SF	80	13.2/13.9	332 R1	1204

REGISTERED ELECTRICAL ENGINEER 12/19/02 DATE

12-6-04
PLANS APPROVAL DATE

REGISTERED PROFESSIONAL ENGINEER JENS ERLINGSSON No. 8249 Exp. 9/30/06 ELECTRICAL STATE OF CALIFORNIA

PB POWER, Inc.
A Parsons Brinckerhoff Company
303 Second St., Suite 700N
San Francisco, CA 94107-1317

The State of California or its officers or agents shall not be responsible for the accuracy or completeness of electronic copies of this plan sheet.

Caltrans now has a web site! To get to the web site, go to: http://www.dot.ca.gov

Caltrans Metric

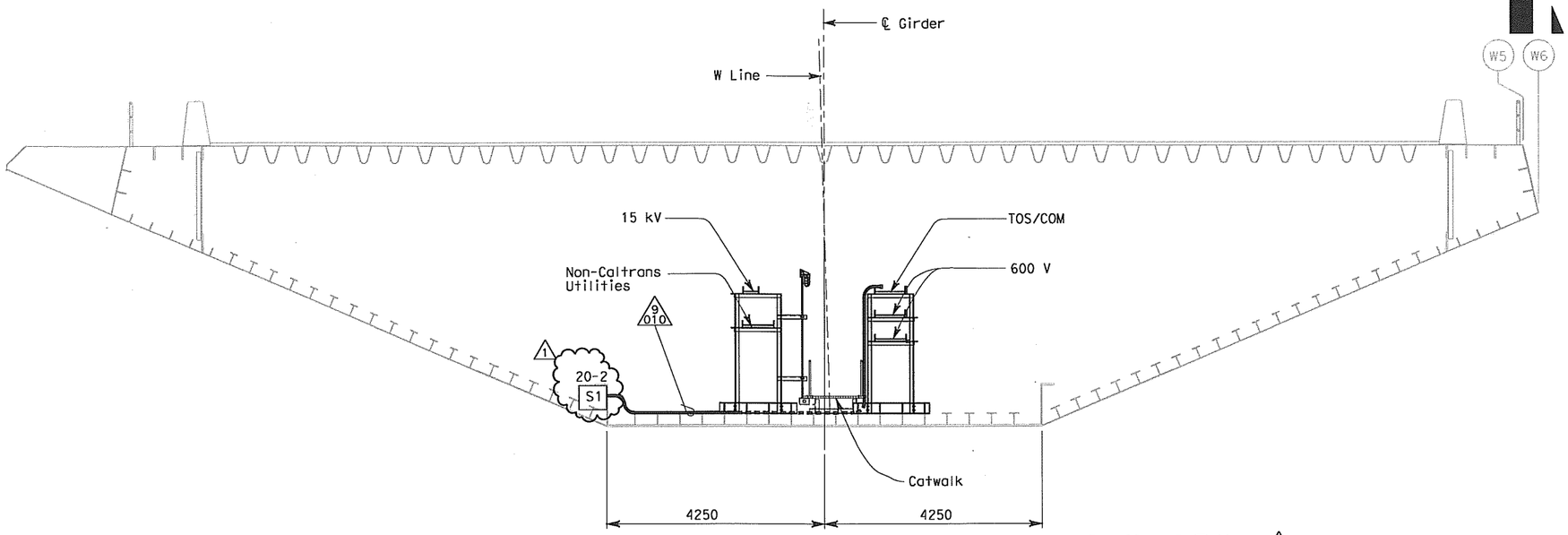

WESTBOUND SAS SUPERSTRUCTURE GIRDER SECTION AT PANEL POINT 24 1

NOTES:

1. For other related work not shown on this drawing, see Electrical Special Provisions.
2. References: 1
   - For nameplates, sensor enclosures and recorder schedules, see sheets E-379, E-380 and E-381.
   - For cable block diagram, see sheets E-382, E-383 and E-384.
   - For general notes of the strong motion detection system, see sheet E-361.
   - For circuit and conduit/cable tray schedules, see sheets starting at E-401.

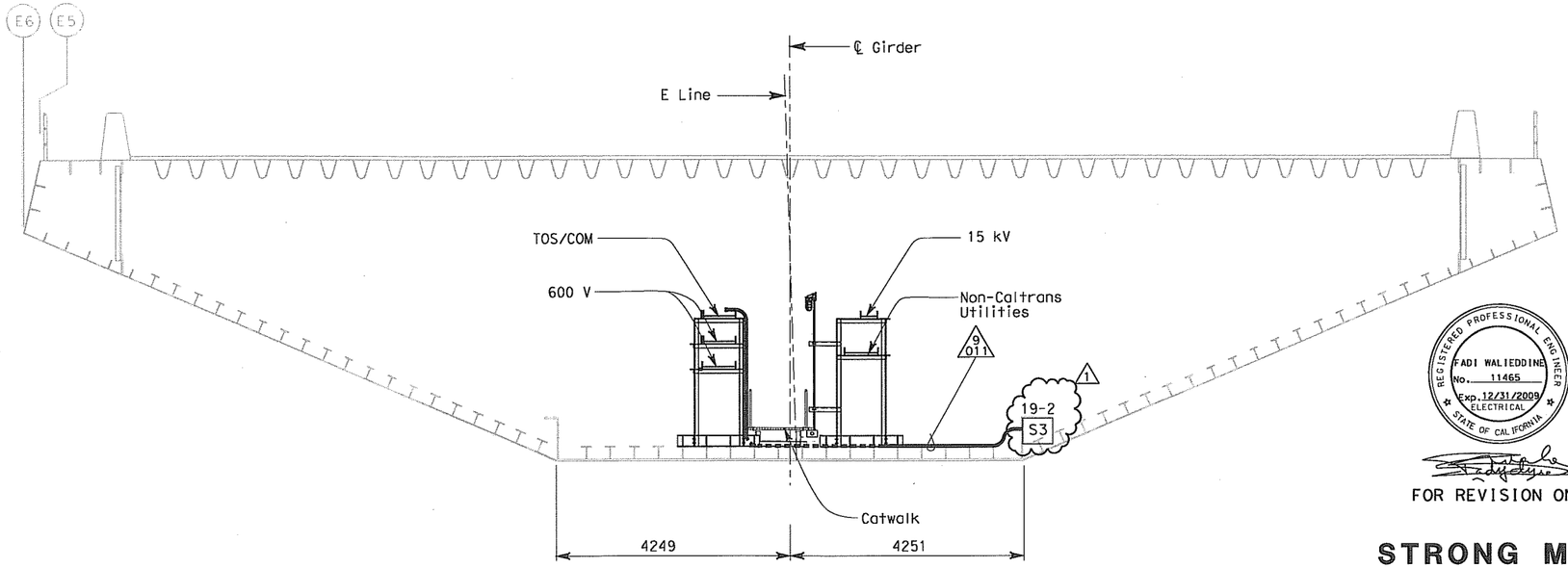

EASTBOUND SAS SUPERSTRUCTURE GIRDER SECTION AT PANEL POINT 24 1

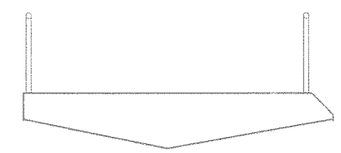

REGISTERED PROFESSIONAL ENGINEER FADI WALIEDDINE No. 11465 Exp. 12/31/2009 ELECTRICAL STATE OF CALIFORNIA

FOR REVISION ONLY

REQUEST FOR INFORMATION NOT ADDRESSED IN THIS CCO REMAIN IN FORCE					
1	10/03/08	STRONG MOTION SYSTEM	RG	FW	74
MARK	DATE	DESCRIPTIONS	BY	CH'D	CCO#
		REVISIONS			

CONTRACT CHANGE ORDER NO. 74
SHEET 7 OF 27

STRONG MOTION DETECTION SYSTEM
SAS SUPERSTRUCTURE
MID SPAN BETWEEN PIER W2 AND TOWER CONDUIT AND SENSOR LOCATION

SCALE 1:50

E-364

DATE	REVISED BY	DATE	REVISED BY
11/01	KG	12/01	AB
3/04	IAH		

CALCULATED/DESIGNED BY
CHECKED BY

DESIGN OVERSIGHT
BEHZAD GOLEMOHAMMADI

STATE OF CALIFORNIA - DEPARTMENT OF TRANSPORTATION
Caltrans

THIS PLAN IS ACCURATE FOR ELECTRICAL WORK ONLY.

ALL DIMENSIONS ARE IN MILLIMETERS UNLESS OTHERWISE SHOWN

FOR REDUCED PLANS ORIGINAL SCALE IS IN MILLIMETERS 0 20 40 60 80

DGN FILE =>T:\13103\MS\pse\SAS Struc\CCO\SAS CCO74\Issued for Submittal 2008-10-03\04-0120f1_0332R01.dgn
USERNAME =>garciar

CU 04251 EA 0120F1

LAST REVISION 00-00-00
DATE PLOTTED => 10/3/2008
TIME PLOTTED => 4:17:42 PM

DIST	COUNTY	ROUTE	KILOMETER POST TOTAL PROJECT	SHEET No	TOTAL SHEETS
04	SF	80	13.2/13.9	334 R2	1204

REGISTERED ELECTRICAL ENGINEER 12/19/02 DATE

12-6-04
PLANS APPROVAL DATE

REGISTERED PROFESSIONAL ENGINEER JENS ERLINGSSON No. 8249 Exp. 9/30/06 ELECTRICAL STATE OF CALIFORNIA

PB POWER, Inc.
A Parsons Brinckerhoff Company
303 Second St., Suite 700N
San Francisco, CA 94107-1317

The State of California or its officers or agents shall not be responsible for the accuracy or completeness of electronic copies of this plan sheet.

Caltrans now has a web site! To get to the web site, go to: http://www.dot.ca.gov

Caltrans Metric

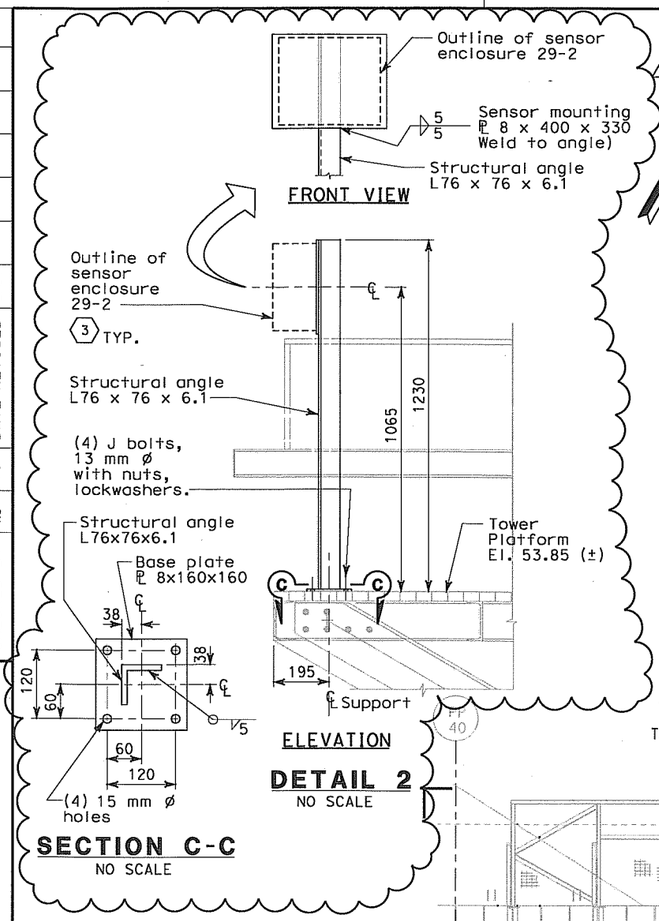

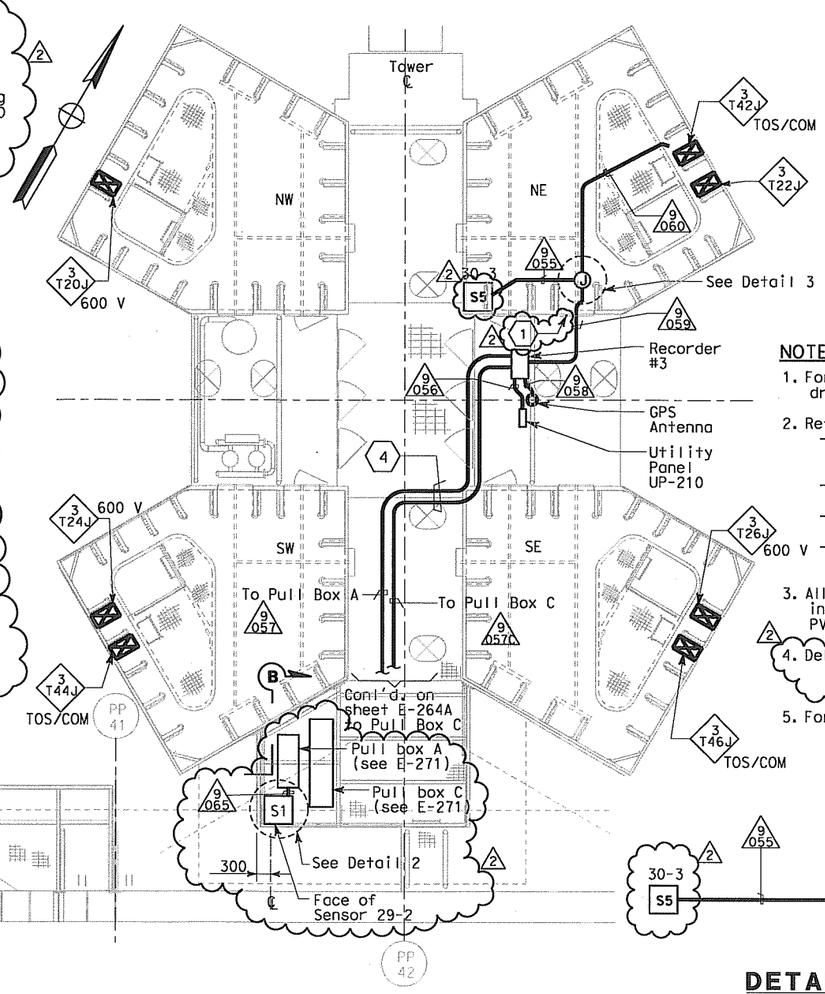

PLAN AT MAIN TOWER, ELEV 53.85 m
SCALE 1:50

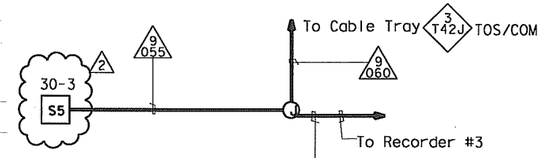

DETAIL 3
NO SCALE

NOTES:

1. For other related work not shown on this drawing, see Electrical Special Provisions.
2. References:
   - For nameplates, sensor enclosures and recorder schedules, see sheets E-379, E-380 and E-381.
   - For cable block diagram, see sheets E-382, E-383 and E-384.
   - For general notes on the strong motion detection system, see sheet E-361.
   - For circuit and conduit/cable tray schedules, see sheets starting at E-401.
3. All conduits and fittings located outside or inside pier shall be rigid galvanized steel, PVC coated.
4. Deleted.
5. For Section B-B, see sheet E-264A.

SHEET NOTES:

1. Pipe sleeves shall be provided with watertight seals after conduits are installed. Spare sleeves shall be capped and plugged.
2. Deleted
3. For nameplate engraving, see nameplate Schedule on sheet E-379.
4. All conduits which thereafter cross the access walkways shall be raised to a level of at least 2438 above the grating to pass overhead, allowing free walkways on the remaining three quadrants of the platform. Door on north face of SE tower shaft shall remain accessible..
5. Deleted.

REGISTERED PROFESSIONAL ENGINEER FADI WALIEDDINE No. 11465 Exp. 12/31/2009 ELECTRICAL STATE OF CALIFORNIA

FOR REVISION ONLY

REQUEST FOR INFORMATION NOT ADDRESSED IN THIS CCO REMAIN IN FORCE

MARK	DATE	DESCRIPTIONS	BY	CH'D	CCO#
2	10/03/08	STRONG MOTION SYSTEM	RG	FW	74
1	02/19/08	ELECTRICAL MODIFICATIONS	MP EL	RR	42

REVISIONS

CONTRACT CHANGE ORDER NO. 74
SHEET 8 OF 27

STRONG MOTION DETECTION SYSTEM
SAS SUPERSTRUCTURE
TOWER PLATFORM CONDUIT AND SENSOR LOCATION
SCALE AS NOTED

E-366

THIS PLAN IS ACCURATE FOR ELECTRICAL WORK ONLY.

ALL DIMENSIONS ARE IN MILLIMETERS UNLESS OTHERWISE SHOWN.

DATE	REVISED BY	DATE REVISED
10/01	AB	2/04

CALCULATED/DESIGNED BY EDC KG
CHECKED BY

DESIGN OVERSIGHT
BEHZAD GOLEMOHAMMADI

STATE OF CALIFORNIA - DEPARTMENT OF TRANSPORTATION
Caltrans

LAST REVISION 00-00-00
DATE PLOTTED => 10/3/2008
TIME PLOTTED => 4:18:30 PM

FOR REDUCED PLANS ORIGINAL SCALE IS IN MILLIMETERS 0 20 40 60 80

DGN FILE =>T:\13103\MS\pse\SAS Struc\CCO\SAS CCO74\Issued for Submittal 2008-10-03\04-0120f1_0334R02.dgn
USERNAME =>garciar

CU 04251 EA 0120F1

DIST	COUNTY	ROUTE	KILOMETER POST TOTAL PROJECT	SHEET No	TOTAL SHEETS
04	SF	80	13.2/13.9	334 S1	1204

REGISTERED ELECTRICAL ENGINEER 05/16/08 DATE

PLANS APPROVAL DATE

REGISTERED PROFESSIONAL ENGINEER FADI WALIEDDINE No. 11465 Exp. 12/31/2009 ELECTRICAL STATE OF CALIFORNIA

PB AMERICAS, Inc.
A Parsons Brinckerhoff Company
303 Second St., Suite 700N
San Francisco, CA 94107-1317

The State of California or its officers or agents shall not be responsible for the accuracy or completeness of electronic copies of this plan sheet.

Caltrans now has a web site! To get to the web site, go to: http://www.dot.ca.gov

Caltrans Metric

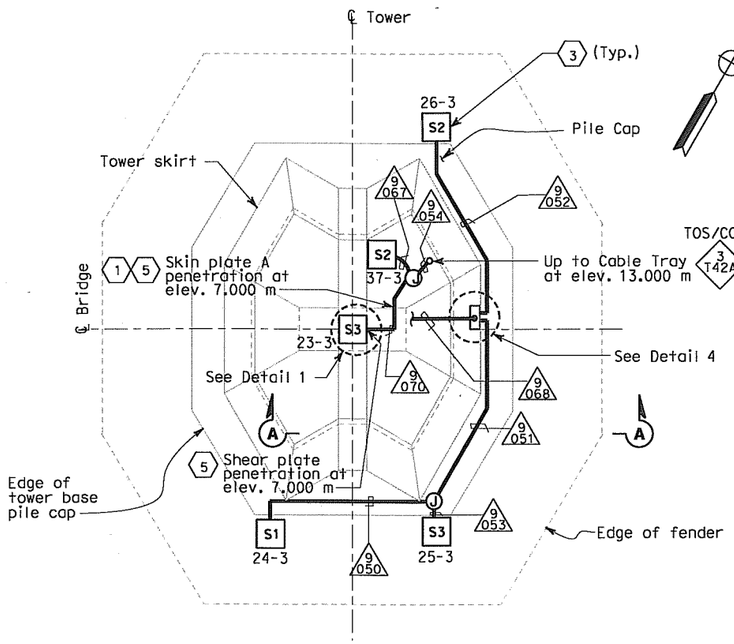

PLAN AT MAIN TOWER, ELEV 3.000 m

SCALE 1:200

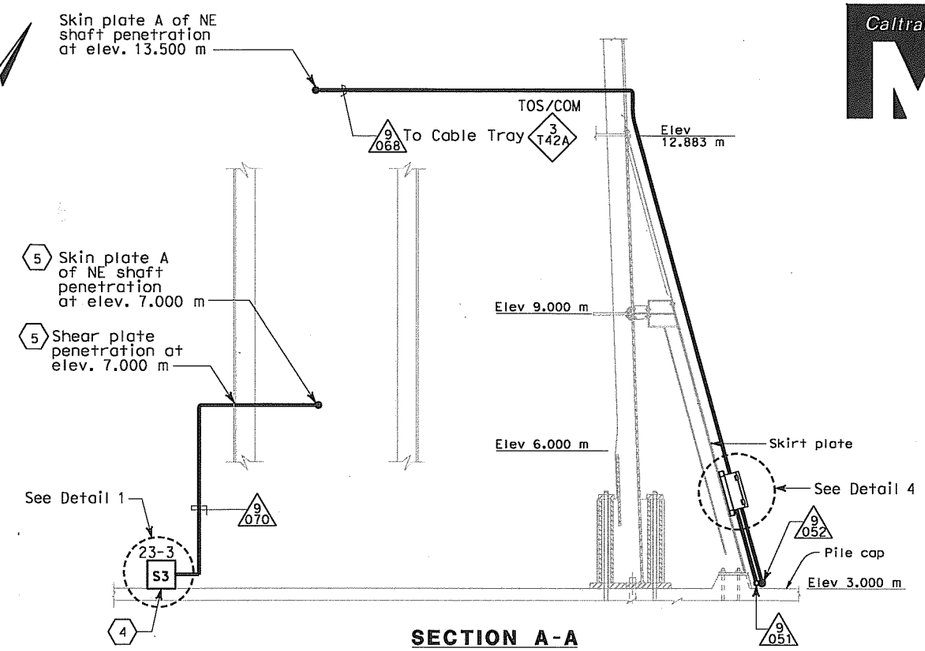

SECTION A-A

NO SCALE

SHEET NOTES:

(1) Pipe sleeves shall be provided with watertight seals after conduits are installed. Spare sleeves shall be capped and plugged.

(2) Downhole sensor cables will be furnished and installed by CDMG.

(3) For nameplate engraving, see nameplate Schedule on sheet E-379.

(4) Remove Downhole Enclosure and re-install on top of the base plate.

(5) Penetrations through skirt plate, shear plate and skin plate A of NE Tower shaft at elev. 7.000 m. For shear plate and skin plate penetrations, use "Hole Stiffening Detail for Utility Conduits" on sheet 966 of 1204.

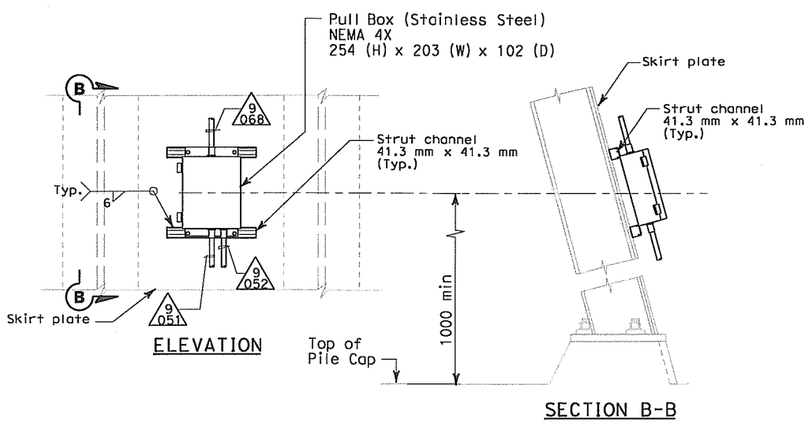

DETAIL 4

NO SCALE

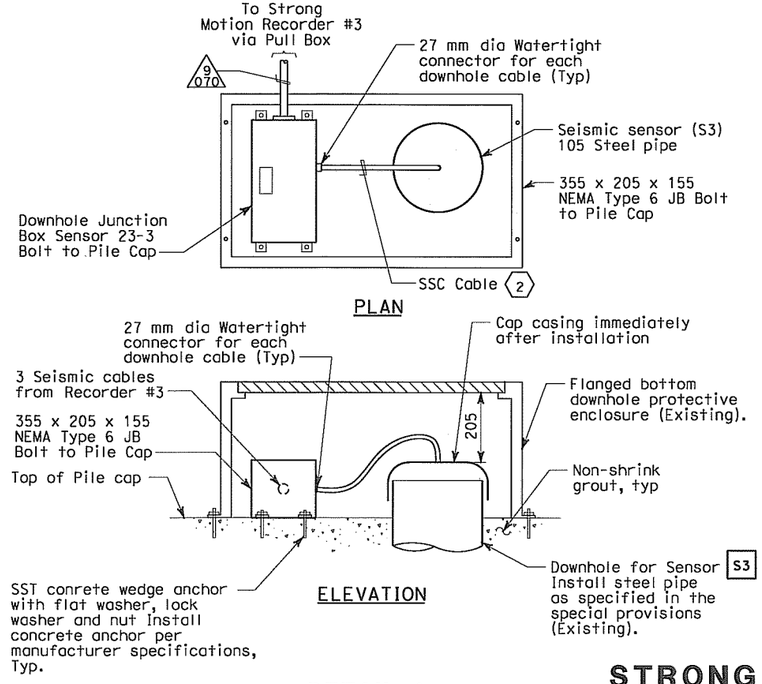

DETAIL 1

NO SCALE

NOTES:

1. For other related work not shown on this drawing, see Electrical Special Provisions.
2. References:
   - For nameplates, sensor enclosures and recorder schedules, see sheets E-379, E-380 and E-381.
   - For cable block diagram, see sheets E-382, E-383 and E-384.
   - For general notes on the strong motion detection system, see sheet E-361.
   - For circuit and conduit/cable tray schedules, see sheets starting at E-401.
3. All conduits and fittings located outside or inside pier shall be rigid galvanized steel, PVC coated.
4. Secure enclosure to concrete with manufacturer's recommended mounting and as approved by the Engineer.

REQUEST FOR INFORMATION NOT ADDRESSED IN THIS CCO REMAIN IN FORCE

MARK	DATE	DESCRIPTIONS	BY	CH'D	CCO#
0	10/03/08	STRONG MOTION SYSTEM	RG	FW	74

REVISIONS

CONTRACT CHANGE ORDER NO. 74
SHEET 9 OF 27

STRONG MOTION DETECTION SYSTEM
SAS SUPERSTRUCTURE
TOWER PLATFORM CONDUIT AND SENSOR LOCATION

SCALE AS NOTED

E-366A

THIS PLAN IS ACCURATE FOR ELECTRICAL WORK ONLY.

ALL DIMENSIONS ARE IN MILLIMETERS UNLESS OTHERWISE SHOWN.

DATE	REVISED BY	DATE REVISED	
10/01	11/01	2/04	AB

CALCULATED/DESIGNED BY	EDC	KG
CHECKED BY		

DESIGN OVERSIGHT: BEHZAD GOLEMOHAMMADI

STATE OF CALIFORNIA - DEPARTMENT OF TRANSPORTATION

Caltrans

FOR REDUCED PLANS ORIGINAL SCALE IS IN MILLIMETERS 0 20 40 60 80

DGN FILE =>T:\13103\MS\pse\SAS Struc\CCO\SAS CCO74\Issued for Submittal 2008-10-03\04-0120f1_0334S01.dgn
USERNAME =>garciar

CU 04251 EA 0120F1

LAST REVISION 00-00-00

DATE PLOTTED => 10/3/2008
TIME PLOTTED => 4:22:07 PM

DIST	COUNTY	ROUTE	KILOMETER POST TOTAL PROJECT	SHEET No	TOTAL SHEETS
04	SF	80	13.2/13.9	335 R2	1204

REGISTERED ELECTRICAL ENGINEER 12/19/02 DATE

12-6-04
PLANS APPROVAL DATE

REGISTERED PROFESSIONAL ENGINEER JENS ERLINGSSON No. 8249 Exp. 9/30/06 ELECTRICAL STATE OF CALIFORNIA

PB POWER, Inc.
A Parsons Brinckerhoff Company
303 Second St., Suite 700N
San Francisco, CA 94107-1317

The State of California or its officers or agents shall not be responsible for the accuracy or completeness of electronic copies of this plan sheet.

Caltrans now has a web site! To get to the web site, go to: http://www.dot.ca.gov

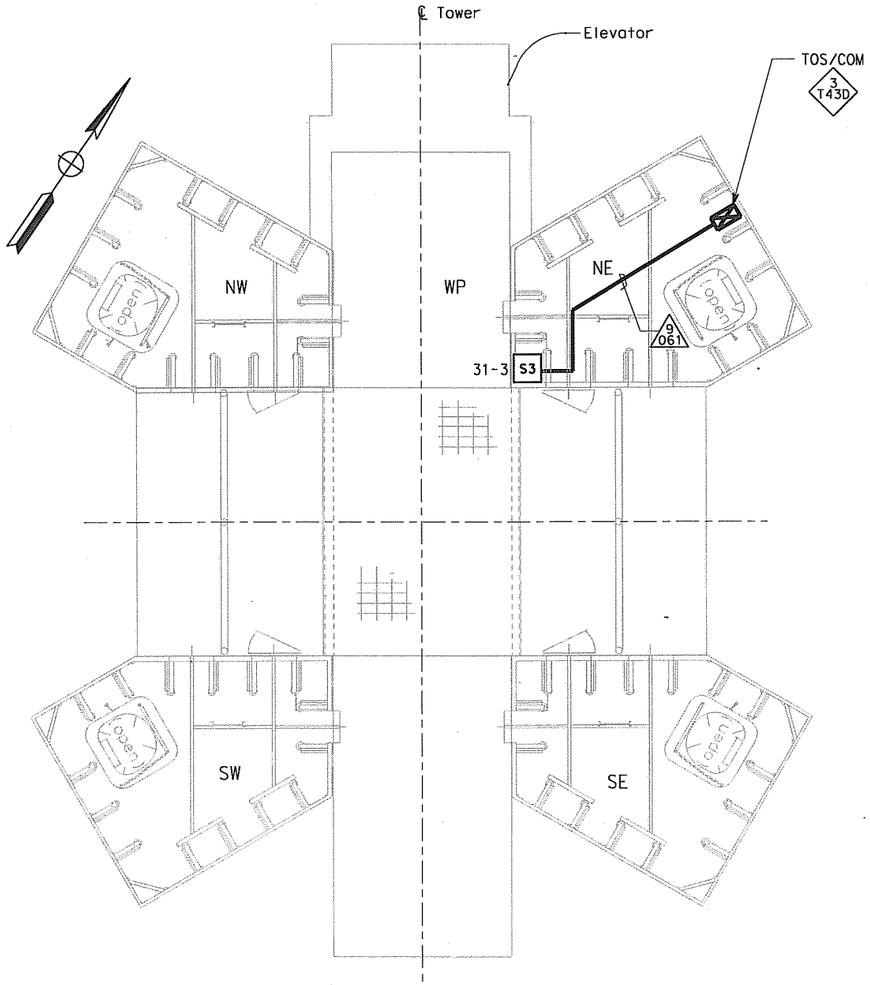

TOWER PLATFORM CONDUIT AND SENSOR LAYOUT
ELEV 93.350 m
SCALE 1:40

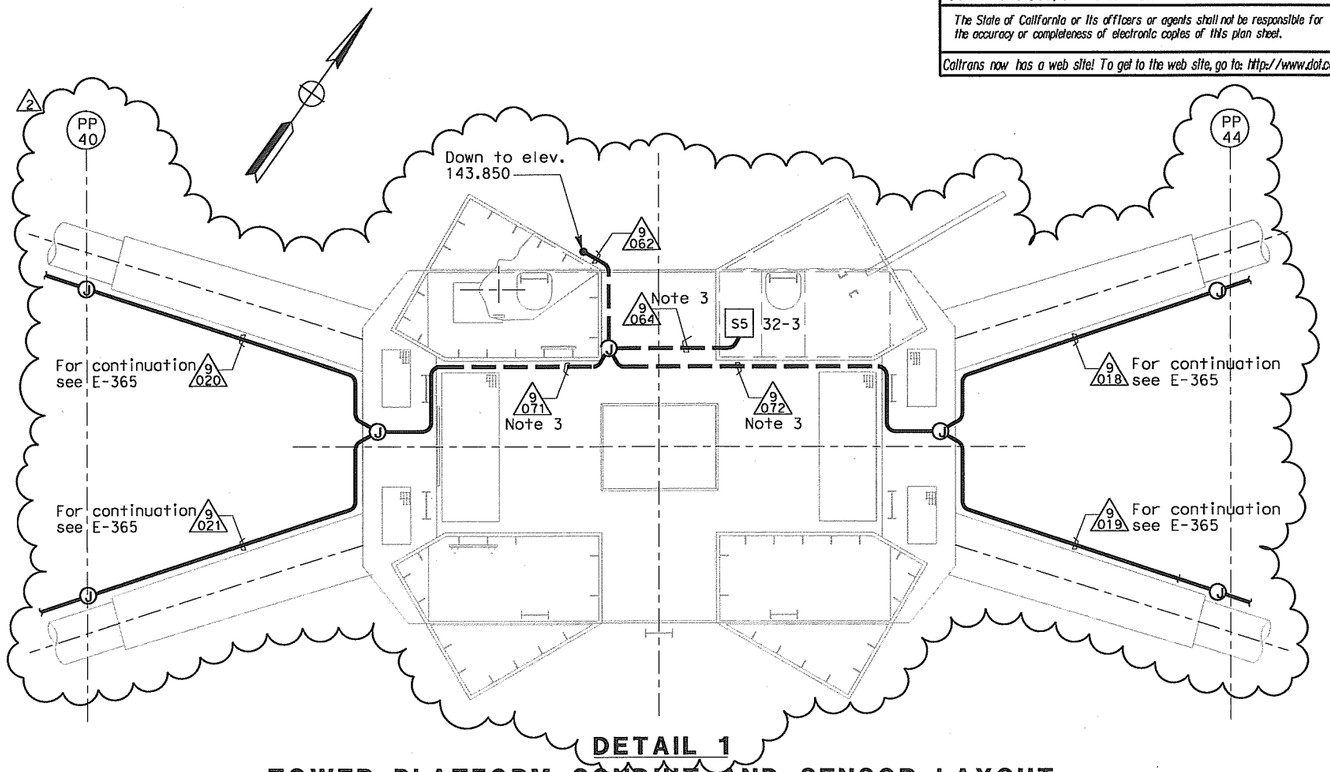

DETAIL 1
TOWER PLATFORM CONDUIT AND SENSOR LAYOUT
ELEV 156.75 M
SCALE 1:50

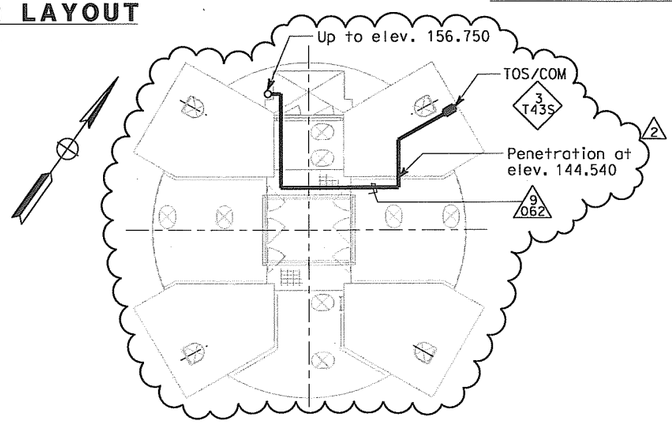

TOWER PLATFORM CONDUIT AND SENSOR LAYOUT
ELEV 143.85 M
NO SCALE

NOTES:

1. For other related work not shown on this drawing, see Electrical Special Provisions.
2. References:
   - For nameplates, sensor enclosures and recorder schedules, see sheets E-379, E-380 and E-381.
   - For cable block diagram, see sheets E-382, E-383 and E-384.
   - For general notes of the strong motion detection system, see sheet E-361.
   - For circuit and conduit/cable tray schedules, see sheets starting at E-401.
3. Conduits located under tower head diaphragm plate and supported from structural strut bolted to diaphragm stiffeners.
4. For additional detail at tower head see E-251D.

STRONG MOTION DETECTION SYSTEM
SAS SUPERSTRUCTURE
TOWER PLATFORM CONDUIT AND SENSOR LOCATION
SCALE AS NOTED

E-367

REGISTERED PROFESSIONAL ENGINEER FADI WALIEDDINE No. 11465 Exp. 12/31/2009 ELECTRICAL STATE OF CALIFORNIA

FOR REVISION ONLY

REQUEST FOR INFORMATION NOT ADDRESSED IN THIS CCO REMAIN IN FORCE					
2	10/03/08	STRONG MOTION SYSTEM	RG	FW	74
1	02/19/08	ELECTRICAL MODIFICATIONS	MP EL	RR	42
MARK	DATE	DESCRIPTIONS	BY	CH'D	CCO#
REVISIONS					

CONTRACT CHANGE ORDER NO. 74
SHEET 10 OF 27

THIS PLAN ACCURATE FOR ELECTRICAL WORK ONLY.

ALL DIMENSIONS ARE IN MILLIMETERS UNLESS OTHERWISE SHOWN.

FOR REDUCED PLANS ORIGINAL SCALE IS IN MILLIMETERS 0 20 40 60 80

DGN FILE =>T:\13103\MS\pse\SAS Struc\CCO\SAS CCO74\Issued for Submittal 2008-10-03\04-0120f1_0335R02.dgn
USERNAME =>garciar

CU 04251 EA 0120F1

DESIGN OVERSIGHT: BEHZAD GOLEMOHAMMADI

CALCULATED/DESIGNED BY: FK — CHECKED BY: EDC

DATE	REVISED BY	DATE	REVISED
10/01		11/01	

STATE OF CALIFORNIA - DEPARTMENT OF TRANSPORTATION

Caltrans

LAST REVISION 00-00-00

DATE PLOTTED => 10/3/2008
TIME PLOTTED => 4:23:10 PM

DIST	COUNTY	ROUTE	KILOMETER POST TOTAL PROJECT	SHEET No	TOTAL SHEETS
04	SF	80	13.2/13.9	336 R1	1204

Caltrans Metric

12/19/02
REGISTERED ELECTRICAL ENGINEER DATE

12-6-04
PLANS APPROVAL DATE

REGISTERED PROFESSIONAL ENGINEER JENS ERLINGSSON No. 8249 Exp. 9/30/06 ELECTRICAL STATE OF CALIFORNIA

PB POWER, Inc.
A Parsons Brinckerhoff Company
303 Second St., Suite 700N
San Francisco, CA 94107-1317

The State of California or its officers or agents shall not be responsible for the accuracy or completeness of electronic copies of this plan sheet.

Caltrans now has a web site! To get to the web site, go to: http://www.dot.ca.gov

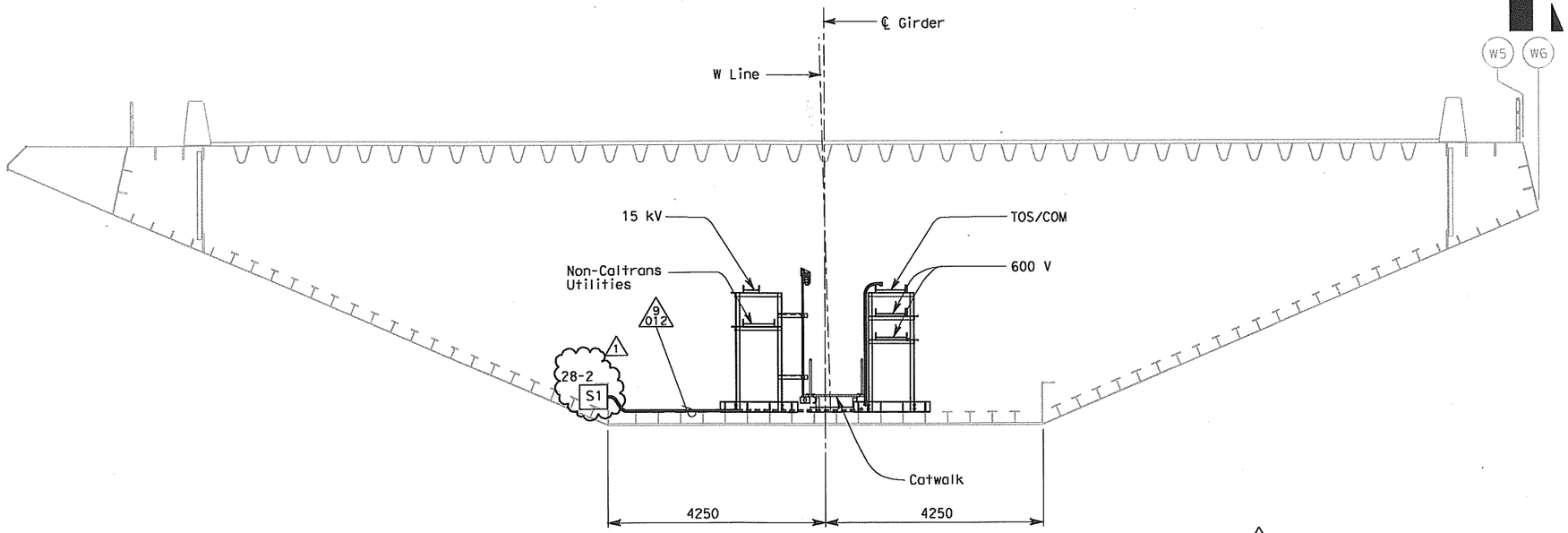

WESTBOUND SAS SUPERSTRUCTURE GIRDER SECTION @ PANEL POINT 42 1

NOTES:

1. For other related work not shown on this drawing, see Electrical Special Provisions.
2. References: 1
   - For nameplates, sensor enclosures and recorder schedules, see sheets E-379, E-380 and E-381.
   - For cable block diagram, see sheets E-382, E-383 and E-384.
   - For general notes of the strong motion detection system, see sheet E-361.
   - For circuit and conduit/cable tray schedules, see sheets starting at E-401.
3. For details of pipe sleeves, see Utility Details sheets

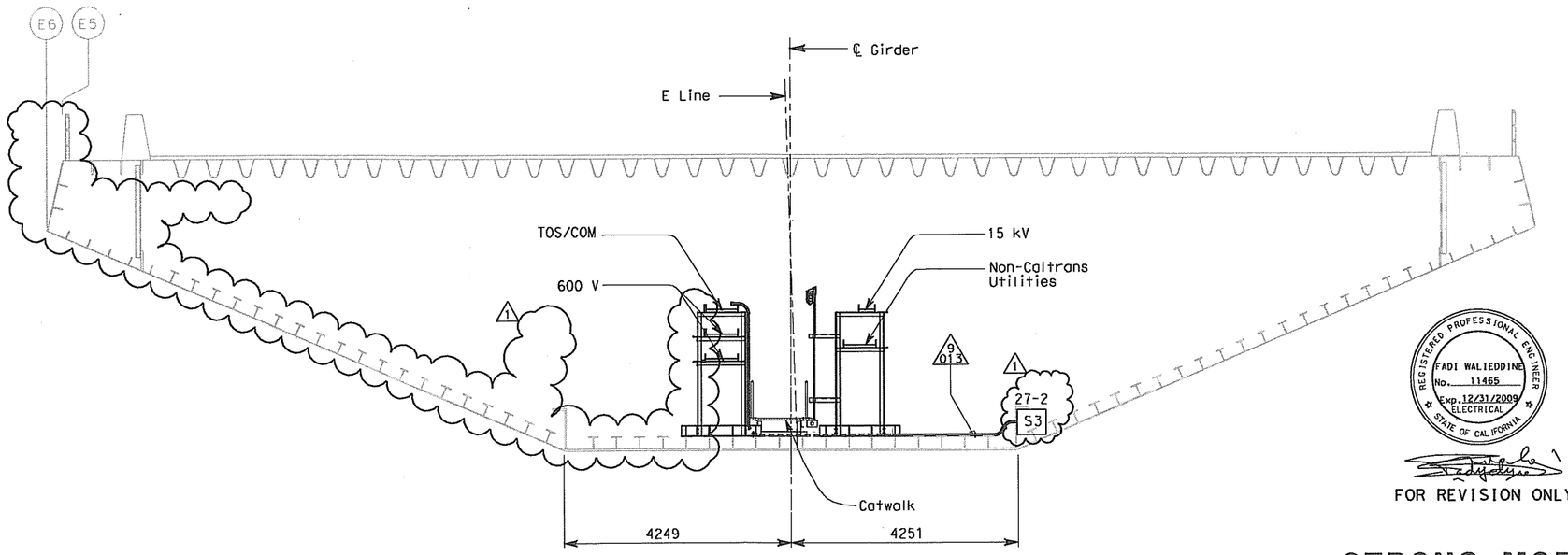

EASTBOUND SAS SUPERSTRUCTURE GIRDER SECTION @ PANEL POINT 42 1

REGISTERED PROFESSIONAL ENGINEER FADI WALIEDDINE No. 11465 Exp. 12/31/2009 ELECTRICAL STATE OF CALIFORNIA

FOR REVISION ONLY

REQUEST FOR INFORMATION NOT ADDRESSED IN THIS CCO REMAIN IN FORCE					
1	10/03/08	STRONG MOTION SYSTEM	RG	FW	74
MARK	DATE	DESCRIPTIONS	BY	CH'D	CCO#
REVISIONS					

CONTRACT CHANGE ORDER NO. 74
SHEET 11 OF 27

STRONG MOTION DETECTION SYSTEM
SAS SUPERSTRUCTURE
WB AND EB AT TOWER CONDUIT AND SENSOR LOCATION

SCALE 1:50

E-368

THIS PLAN IS ACCURATE FOR ELECTRICAL WORK ONLY.

ALL DIMENSIONS ARE IN MILLIMETERS UNLESS OTHERWISE SHOWN.

FOR REDUCED PLANS ORIGINAL SCALE IS IN MILLIMETERS 0 20 40 60 80

DGN FILE =>T:\13103\MS\pse\SAS Struc\CCO\SAS CCO74\Issued for Submittal 2008-10-03\04-0120f1_0336R01.dgn
USERNAME =>llorico
CU 04251
EA 0120F1

DATE PLOTTED => 10/2/2008
TIME PLOTTED => 6:01:41 PM
LAST REVISION 00-00-00

STATE OF CALIFORNIA - DEPARTMENT OF TRANSPORTATION
Caltrans

DESIGN OVERSIGHT: BEHZAD GOLEMOHAMMADI
CALCULATED/DESIGNED BY: KG
CHECKED BY: AB
DATE: 11/01 12/01
REVISED BY: IAH
DATE REVISED: 3/04

DIST	COUNTY	ROUTE	KILOMETER POST TOTAL PROJECT	SHEET No	TOTAL SHEETS
04	SF	80	13.2/13.9	337 R1	1204

Caltrans Metric

Jens Erlingsson 12/19/02
REGISTERED ELECTRICAL ENGINEER DATE

12-6-04
PLANS APPROVAL DATE

REGISTERED PROFESSIONAL ENGINEER JENS ERLINGSSON No. 8249 Exp. 9/30/06 ELECTRICAL STATE OF CALIFORNIA

PB POWER, Inc.
A Parsons Brinckerhoff Company
303 Second St., Suite 700N
San Francisco, CA 94107-1317

The State of California or its officers or agents shall not be responsible for the accuracy or completeness of electronic copies of this plan sheet.

Caltrans now has a web site! To get to the web site, go to http://www.dot.ca.gov

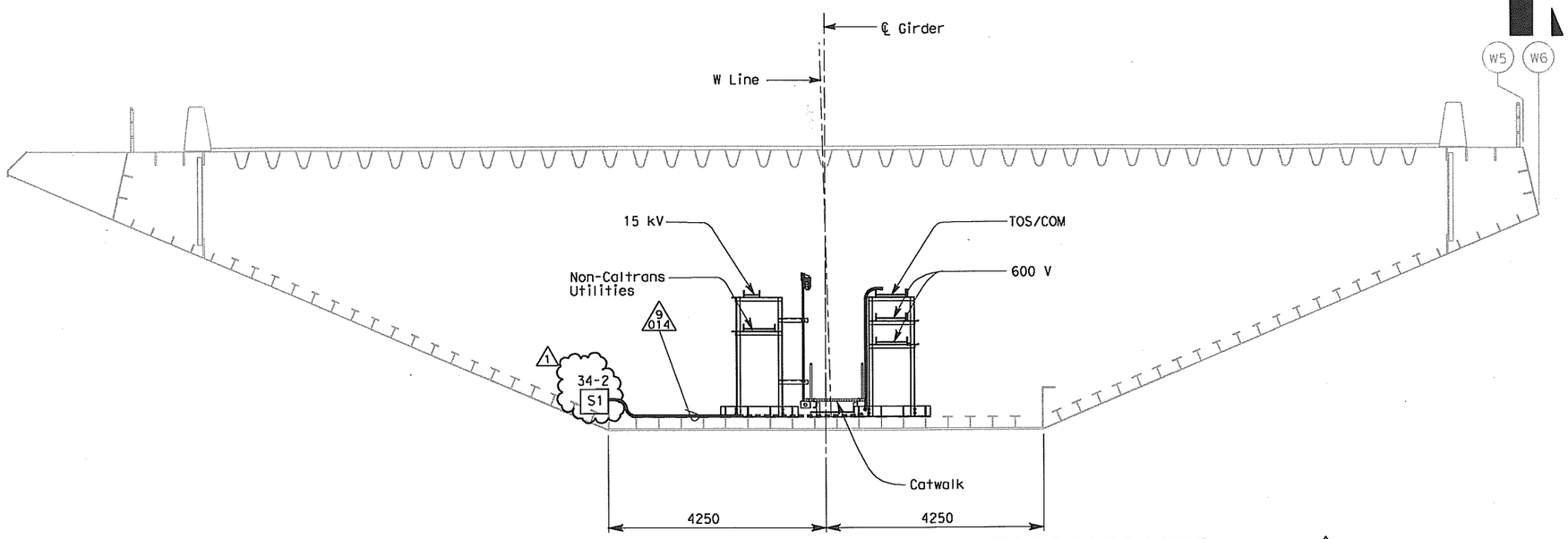

WESTBOUND SAS SUPERSTRUCTURE GIRDER SECTION AT PANEL POINT 68 (67.8) 1

NOTES:

1. For other related work not shown on this drawing, see Electrical Special Provisions.
2. References: 1
   - For nameplates, sensor enclosures and recorder schedules, see sheets E-379, E-380 and E-381.
   - For cable block diagram, see sheets E-382, E-383 and E-384.
   - For general notes of the strong motion detection system, see sheet E-361.
   - For circuit and conduit/cable tray schedules, see sheets starting at E-401.

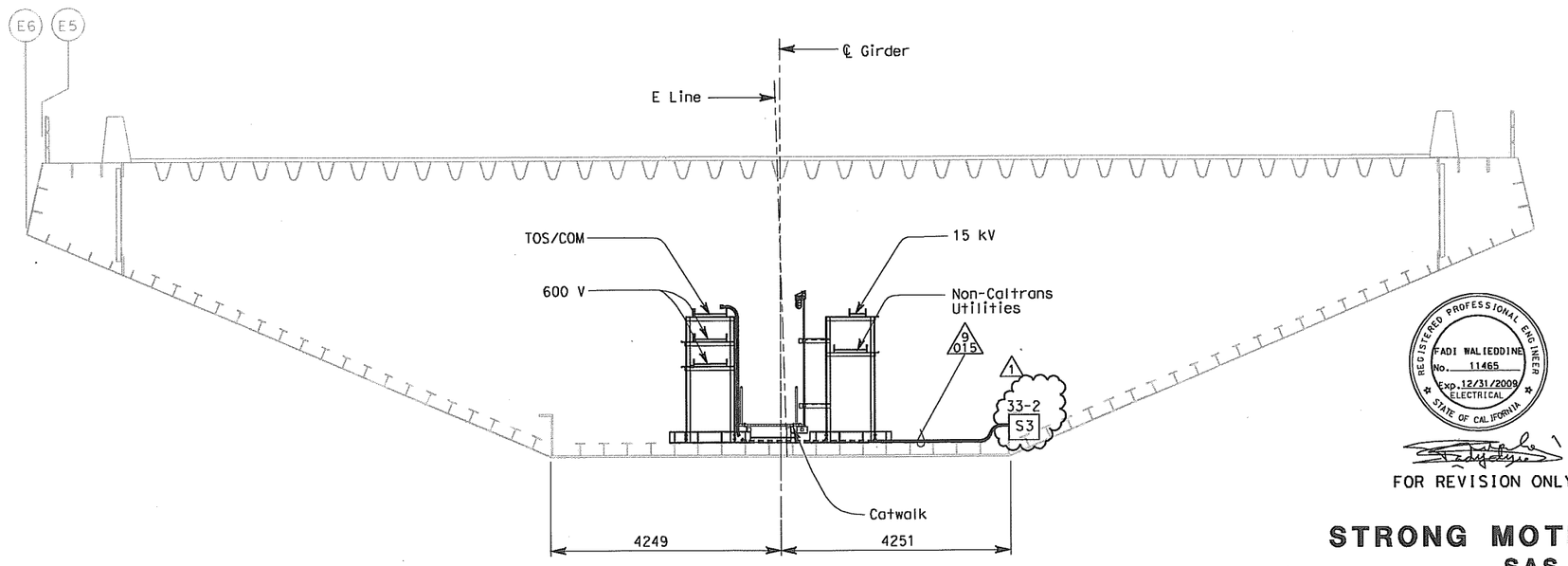

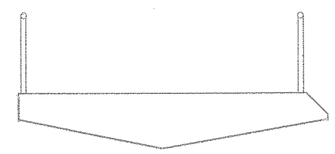

EASTBOUND SAS SUPERSTRUCTURE GIRDER SECTION AT PANEL POINT 68 (67.8) 1

REGISTERED PROFESSIONAL ENGINEER FADI WALIEDDINE No. 11465 Exp. 12/31/2009 ELECTRICAL STATE OF CALIFORNIA

FOR REVISION ONLY

REQUEST FOR INFORMATION NOT ADDRESSED IN THIS CCO REMAIN IN FORCE					
1	10/03/08	STRONG MOTION SYSTEM	RG	FW	74
MARK	DATE	DESCRIPTIONS	BY	CH'D	CCO#
REVISIONS					

CONTRACT CHANGE ORDER NO. 74
SHEET 12 OF 27

STRONG MOTION DETECTION SYSTEM
SAS SUPERSTRUCTURE
1/3 SPAN BETWEEN TOWER AND PIER E2 CONDUIT AND SENSOR LOCATION

SCALE 1:50

E-369

STATE OF CALIFORNIA - DEPARTMENT OF TRANSPORTATION
Caltrans

DESIGN OVERSIGHT: BEHZAD GOLEMOHAMMADI

CALCULATED/ DESIGNED BY	KG	DATE 11/01	REVISED BY	IAH
CHECKED BY	AB	12/01	DATE REVISED	3/04

THIS PLAN IS ACCURATE FOR ELECTRICAL WORK ONLY.

ALL DIMENSIONS ARE IN MILLIMETERS UNLESS OTHERWISE SHOWN.

FOR REDUCED PLANS ORIGINAL SCALE IS IN MILLIMETERS 0 20 40 60 80

DGN FILE =>T:\13103\MS\pse\SAS Struc\CCO\SAS CCO74\Issued for Submittal 2008-10-03\04-0120f1_0337R01.dgn
USERNAME =>llorico

CU 04251 EA 0120F1

LAST REVISION 00-00-00
DATE PLOTTED => 10/2/2008
TIME PLOTTED => 6:02:03 PM

DIST	COUNTY	ROUTE	KILOMETER POST TOTAL PROJECT	SHEET No	TOTAL SHEETS
04	SF	80	13.2/13.9	338 R1	1204

REGISTERED ELECTRICAL ENGINEER 12/19/02 DATE

12-6-04
PLANS APPROVAL DATE

REGISTERED PROFESSIONAL ENGINEER JENS ERLINGSSON No. 8249 Exp. 9/30/06 ELECTRICAL STATE OF CALIFORNIA

PB POWER, Inc.
A Parsons Brinckerhoff Company
303 Second St., Suite 700N
San Francisco, CA 94107-1317

The State of California or its officers or agents shall not be responsible for the accuracy or completeness of electronic copies of this plan sheet.

Caltrans now has a web site! To get to the web site, go to http://www.dot.ca.gov

Caltrans Metric

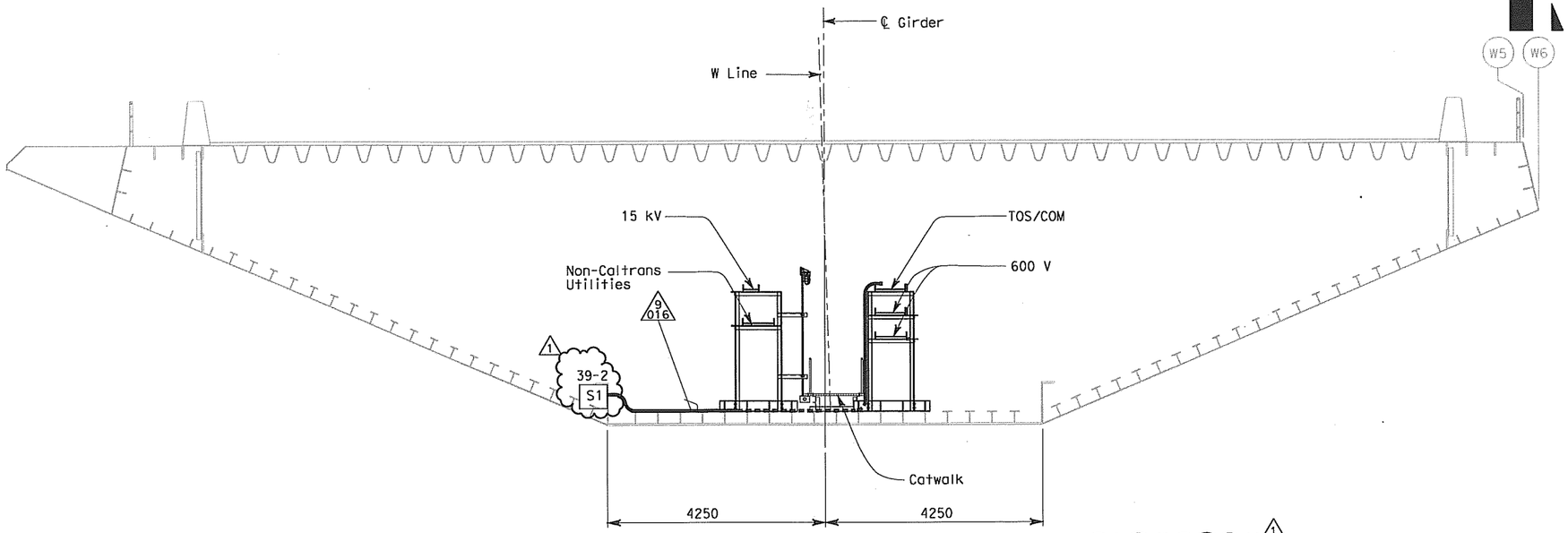

WESTBOUND SAS SUPERSTRUCTURE GIRDER SECTION AT PANEL POINT 94 1

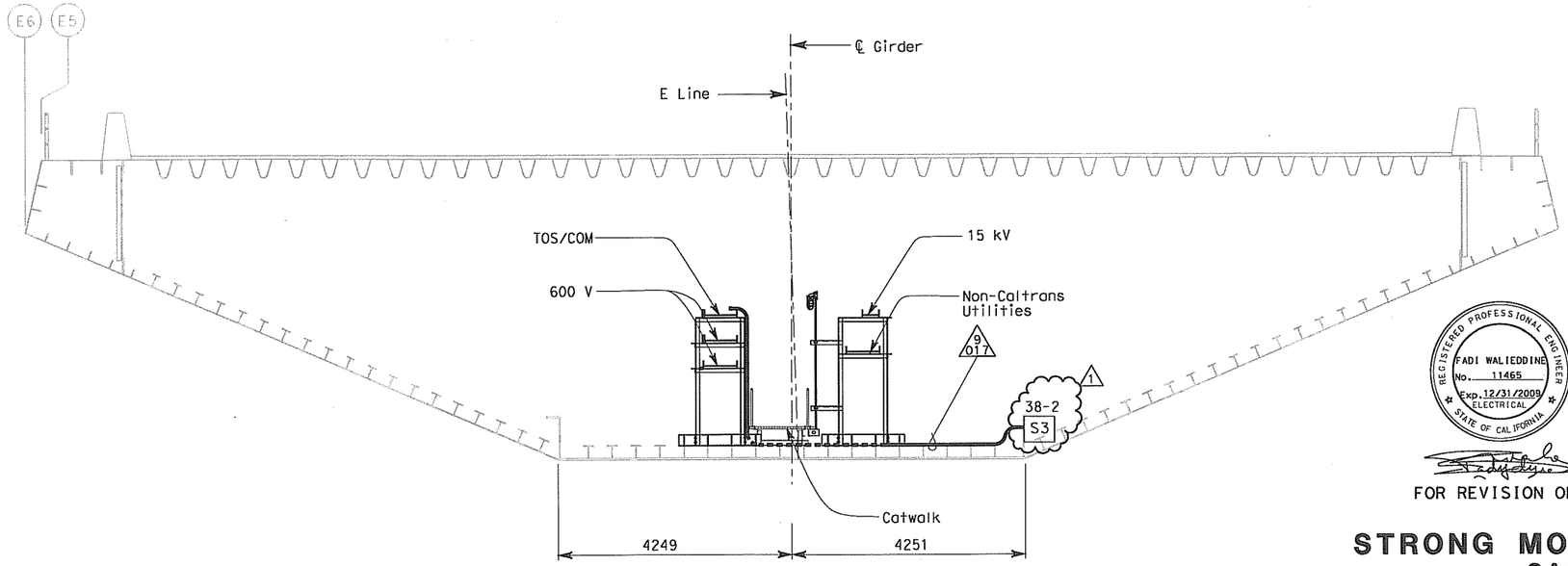

EASTBOUND SAS SUPERSTRUCTURE GIRDER SECTION AT PANEL POINT 94 1

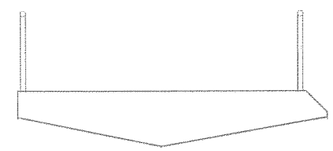

NOTES:

1. For other related work not shown on this drawing, see Electrical Special Provisions.
2. References: 1
   - For nameplates, sensor enclosures and recorder schedules, see sheets E-379, E-380 and E-381.
   - For cable block diagram, see sheets E-382, E-383 and E-384.
   - For general notes of the strong motion detection system, see sheet E-361.
   - For circuit and conduit/cable tray schedules, see sheets starting at E-401.

REGISTERED PROFESSIONAL ENGINEER FADI WALIEDDINE No. 11465 Exp. 12/31/2009 ELECTRICAL STATE OF CALIFORNIA

FOR REVISION ONLY

REQUEST FOR INFORMATION NOT ADDRESSED IN THIS CCO REMAIN IN FORCE

MARK	DATE	DESCRIPTIONS	BY	CH'D	CCO#
1	10/03/08	STRONG MOTION SYSTEM	RG	FW	74

REVISIONS

CONTRACT CHANGE ORDER NO. 74
SHEET 13 OF 27

STRONG MOTION DETECTION SYSTEM
SAS SUPERSTRUCTURE
2/3 SPAN BETWEEN TOWER AND PIER E2 CONDUIT AND SENSOR LOCATION

SCALE 1:50

E-370

THIS PLAN IS ACCURATE FOR ELECTRICAL WORK ONLY.

ALL DIMENSIONS ARE IN MILLIMETERS UNLESS OTHERWISE SHOWN.

FOR REDUCED PLANS ORIGINAL SCALE IS IN MILLIMETERS 0 20 40 60 80

DGN FILE =>T:\13103\MS\pse\SAS Struc\CCO\SAS CCO74\Issued for Submittal 2008-10-03\04-0120f1_0338R01.dgn
USERNAME =>garciar

CU 04251 EA 0120F1

LAST REVISION 00-00-00 DATE PLOTTED => 10/3/2008 TIME PLOTTED => 4:20:20 PM

STATE OF CALIFORNIA - DEPARTMENT OF TRANSPORTATION
Caltrans

DESIGN OVERSIGHT
BEHZAD GOLEMOHAMADI

CALCULATED/DESIGNED BY KG
CHECKED BY AB

DATE	REVISED BY	DATE REVISED	
11/01		12/01	IAH 3/04

DIST	COUNTY	ROUTE	KILOMETER POST TOTAL PROJECT	SHEET No	TOTAL SHEETS
04	SF	80	13.2/13.9	339 R1	1204

REGISTERED ELECTRICAL ENGINEER 12/19/02 DATE

12-6-04
PLANS APPROVAL DATE

REGISTERED PROFESSIONAL ENGINEER JENS ERLINGSSON No. 8249 Exp. 9/30/06 ELECTRICAL STATE OF CALIFORNIA

PB POWER, Inc.
A Parsons Brinckerhoff Company
303 Second St., Suite 700N
San Francisco, CA 94107-1317

The State of California or its officers or agents shall not be responsible for the accuracy or completeness of electronic copies of this plan sheet.

Caltrans now has a web site! To get to the web site, go to http://www.dot.ca.gov

Caltrans Metric

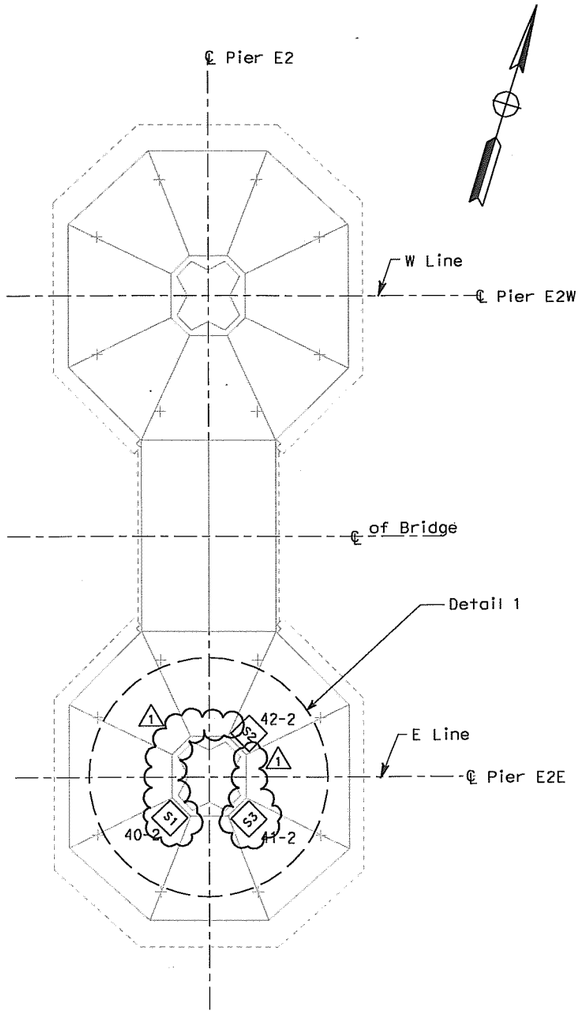

FOOTING PLAN
SCALE 1:250

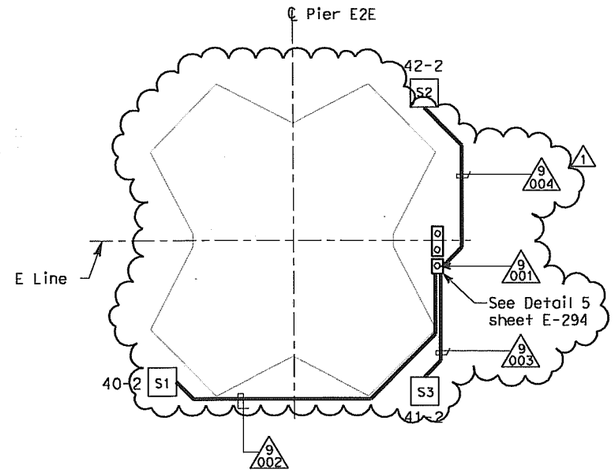

DETAIL 1
NO SCALE

NOTES:

1. For other related work not shown on this drawing, see Electrical Special Provisions.
2. References:
   - For nameplates, sensor enclosures and recorder schedules, see sheets E-379, E-380 and E-381.
   - For cable block diagram, see sheets E-382, E-383 and E-384.
   - For general notes of the strong motion detection system, see sheet E-361.
   - For circuit and conduit/cable tray schedules, see sheets starting at E-401.
3. All conduits and fittings located outside or inside pier shall be rigid galvanized steel, PVC coated.
4. Secure enclosure to concrete per note 3 on sheet E-378.

REGISTERED PROFESSIONAL ENGINEER FADI WALIEDDINE No. 11465 Exp. 12/31/2009 ELECTRICAL STATE OF CALIFORNIA

FOR REVISION ONLY

REQUEST FOR INFORMATION NOT ADDRESSED IN THIS CCO REMAIN IN FORCE

MARK	DATE	DESCRIPTIONS	BY	CH'D	CCO#
1	10/03/08	STRONG MOTION SYSTEM	RG	FW	74

REVISIONS

CONTRACT CHANGE ORDER NO. 74
SHEET 14 OF 27

PIER 2 CONDUIT PLAN

STRONG MOTION DETECTION SYSTEM
SAS SUPERSTRUCTURE
PIER E2 FOOTER CONDUIT AND SENSOR LOCATION
SCALE AS NOTED

E-371

THIS PLAN IS ACCURATE FOR ELECTRICAL WORK ONLY.

ALL DIMENSIONS ARE IN MILLIMETERS UNLESS OTHERWISE SHOWN.

STATE OF CALIFORNIA - DEPARTMENT OF TRANSPORTATION
Caltrans

DESIGN OVERSIGHT: BEHZAD GOLEMOHAMMADI

CALCULATED/DESIGNED BY: EDC — DATE: 10/01
CHECKED BY: KG — 11/01

REVISED BY — DATE REVISED

FOR REDUCED PLANS ORIGINAL SCALE IS IN MILLIMETERS: 0 20 40 60 80

DGN FILE =>t:\13103\MS\pse\SAS Struc\CCO\SAS CCO74\Issued for Submittal 2008-10-03\04-0120f1_0339R01.dgn
USERNAME =>llorico

CU 04251 | EA 0120F1

LAST REVISION 00-00-00 | DATE PLOTTED => 11/6/2008 | TIME PLOTTED => 10:28:43 AM

DIST	COUNTY	ROUTE	KILOMETER POST TOTAL PROJECT	SHEET No	TOTAL SHEETS
04	SF	80	13.2/13.9	340 R1	1204

REGISTERED ELECTRICAL ENGINEER 12/19/02 DATE

12-6-04
PLANS APPROVAL DATE

REGISTERED PROFESSIONAL ENGINEER JENS ERLINGSSON No. 8249 Exp. 9/30/06 ELECTRICAL STATE OF CALIFORNIA

PB POWER, Inc.
A Parsons Brinckerhoff Company
303 Second St., Suite 700N
San Francisco, CA 94107-1317

The State of California or its officers or agents shall not be responsible for the accuracy or completeness of electronic copies of this plan sheet.

Caltrans now has a web site! To get to the web site, go to http://www.dot.ca.gov

Caltrans Metric

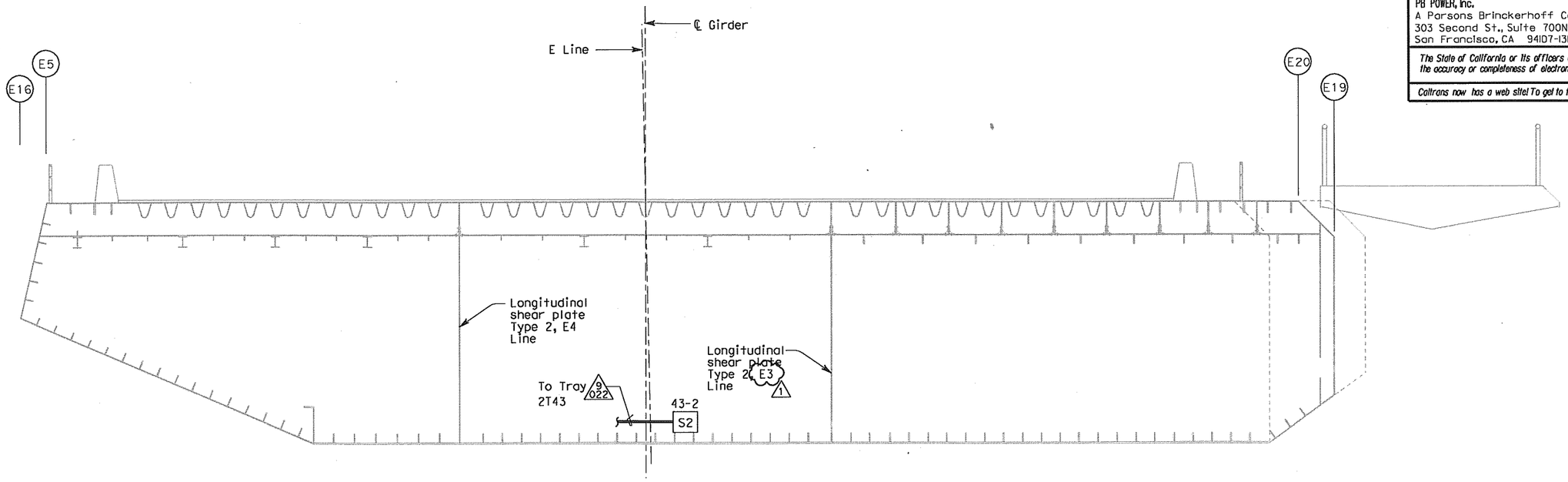

EASTBOUND SAS SUPERSTRUCTURE GIRDER SECTION AT PANEL POINT 118 PLUS 1 TRANSVERSE STIFFENER 1

NOTES:

1. For other related work not shown on this drawing, see Electrical Special Provisions.
2. References: 1
   - For nameplates, sensor enclosures and recorder schedules, see sheets E-379, E-380 and E-381.
   - For cable block diagram, see sheets E-382, E-383 and E-384.
   - For general notes of the strong motion detection system, see sheet E-361.
   - For circuit and conduit/cable tray schedules, see sheets starting at E-401.

REGISTERED PROFESSIONAL ENGINEER FADI WALIEDDINE No. 11465 Exp. 12/31/2008 ELECTRICAL STATE OF CALIFORNIA

FOR REVISION ONLY

REQUEST FOR INFORMATION NOT ADDRESSED IN THIS CCO REMAIN IN FORCE

MARK	DATE	DESCRIPTIONS	BY	CH'D	CCO#
1	10/03/08	STRONG MOTION SYSTEM	RG	FW	74

REVISIONS

CONTRACT CHANGE ORDER NO. 74
SHEET 15 OF 27

STRONG MOTION DETECTION SYSTEM
SAS SUPERSTRUCTURE
PIER E2 GIRDER CONDUIT AND SENSOR LOCATION

SCALE 1:50

E-372

THIS PLAN IS ACCURATE FOR ELECTRICAL WORK ONLY.

	DATE	REVISED BY
CALCULATED/DESIGNED BY	KG	11/01
CHECKED BY	AB	12/01
	DATE REVISED	

DESIGN OVERSIGHT
BEHZAD GOLEMOHAMMADI

STATE OF CALIFORNIA - DEPARTMENT OF TRANSPORTATION
Caltrans

FOR REDUCED PLANS ORIGINAL SCALE IS IN MILLIMETERS 0 20 40 60 80

DGN FILE =>T:\13103\MS\pse\SAS Struc\CCO\SAS CCO74\Issued for Submittal 2008-10-03\04-0120F1_0340R01.dgn
USERNAME =>llorico

CU 04251 | EA 0120F1

LAST REVISION 00-00-00
DATE PLOTTED => 10/2/2008
TIME PLOTTED => 6:03:14 PM

DIST	COUNTY	ROUTE	KILOMETER POST TOTAL PROJECT	SHEET No	TOTAL SHEETS
04	SF	80	13.2/13.9	341 R1	1204

REGISTERED ELECTRICAL ENGINEER 12/19/02 DATE

12-6-04
PLANS APPROVAL DATE

REGISTERED PROFESSIONAL ENGINEER JENS ERLINGSSON No. 8249 Exp. 9/30/06 ELECTRICAL STATE OF CALIFORNIA

PB POWER, Inc.
A Parsons Brinckerhoff Company
303 Second St., Suite 700N
San Francisco, CA 94107-1317

The State of California or its officers or agents shall not be responsible for the accuracy or completeness of electronic copies of this plan sheet.

Caltrans now has a web site! To get to the web site, go to http://www.dot.ca.gov

Caltrans Metric

REGISTERED PROFESSIONAL ENGINEER FADI WALIEDDINE No. 11465 Exp. 12/31/2009 ELECTRICAL STATE OF CALIFORNIA

FOR REVISION ONLY

REQUEST FOR INFORMATION NOT ADDRESSED IN THIS CCO REMAIN IN FORCE					
1	10/03/08	STRONG MOTION SYSTEM	RG	FW	74
MARK	DATE	DESCRIPTIONS	BY	CH'D	CCO#
REVISIONS					

CONTRACT CHANGE ORDER NO. 74
SHEET 16 OF 27

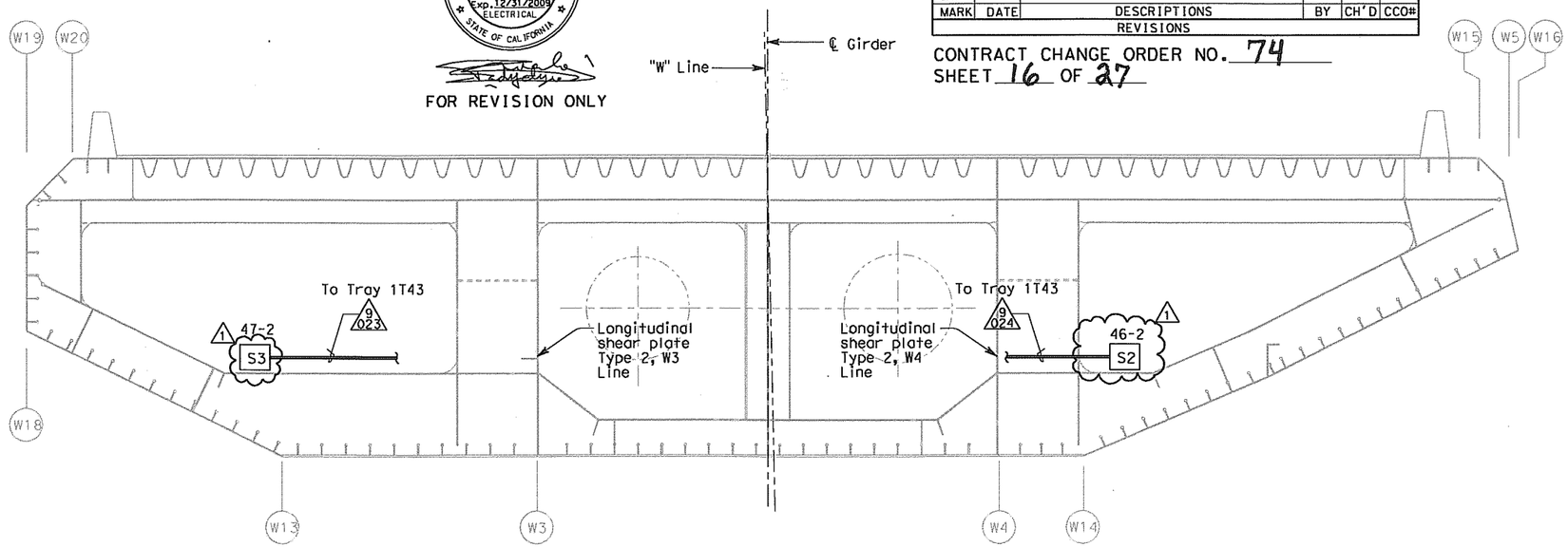

WESTBOUND SAS SUPERSTRUCTURE GIRDER SECTION AT PANEL POINT 127.5 1

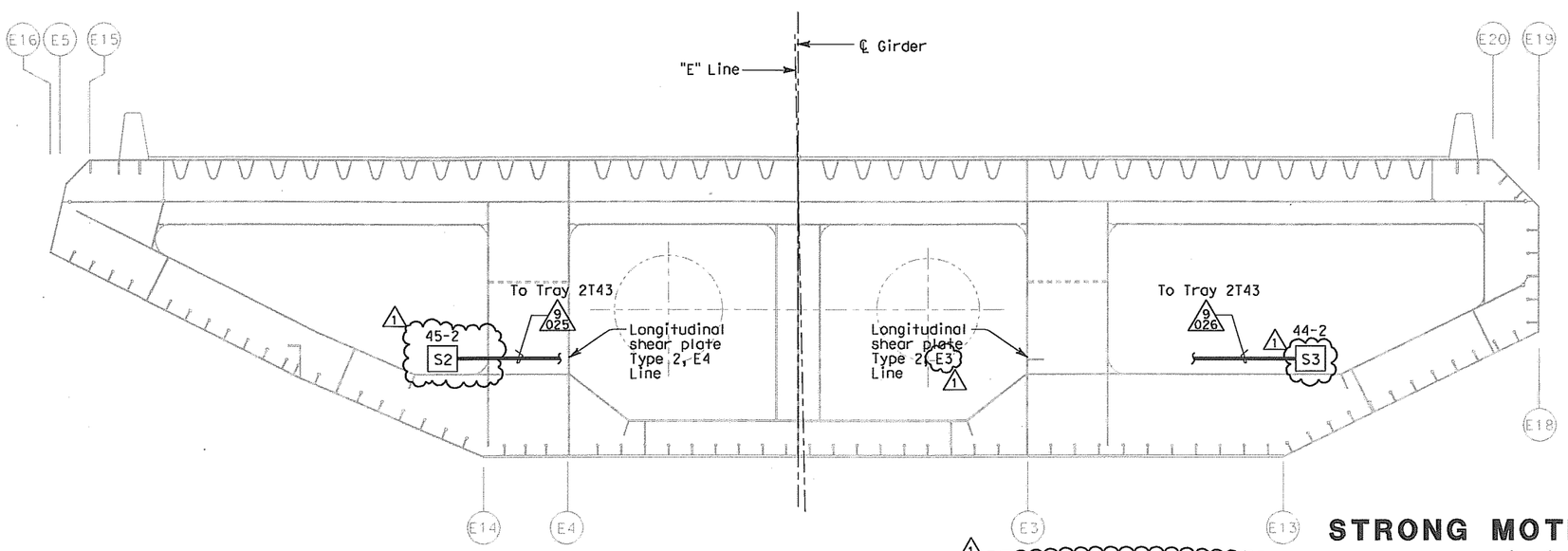

EASTBOUND SAS SUPERSTRUCTURE GIRDER SECTION AT PANEL POINT 127.5 1

NOTES:

1. For other related work not shown on this drawing, see Electrical Special Provisions.
2. References: 1
   - For nameplates, sensor enclosures and recorder schedules, see sheets E-379, E-380 and E-381.
   - For cable block diagram, see sheets E-382, E-383 and E-384.
   - For general notes of the strong motion detection system, see sheet E-361.
   - For circuit and conduit/cable tray schedules, see sheets starting at E-401.

STRONG MOTION DETECTION SYSTEM
SAS SUPERSTRUCTURE
PIER E2 GIRDER CONDUIT AND SENSOR LOCATION

SCALE 1:50

THIS PLAN IS ACCURATE FOR ELECTRICAL WORK ONLY.

E-373

	DATE	REVISED BY
CALCULATED/DESIGNED BY	KG	11/01
CHECKED BY	AB	12/01

DESIGN OVERSIGHT
BEHZAD GOLEMOHAMMADI

STATE OF CALIFORNIA - DEPARTMENT OF TRANSPORTATION
Caltrans

LAST REVISION 00-00-00
DATE PLOTTED => 10/2/2008
TIME PLOTTED => 6:03:34 PM

FOR REDUCED PLANS ORIGINAL SCALE IS IN MILLIMETERS 0 20 40 60 80

DGN FILE =>T:\13103\MS\pse\SAS Struc\CCO\SAS CCO74\Issued for Submittal 2008-10-03\04-0120F1_0341R01.dgn
USERNAME =>llorico

CU 04251 EA 0120F1

DIST	COUNTY	ROUTE	KILOMETER POST TOTAL PROJECT	SHEET No	TOTAL SHEETS
04	SF	80	13.2/13.9	342 R1	1204

REGISTERED ELECTRICAL ENGINEER 12/19/02 DATE

12-6-04
PLANS APPROVAL DATE

REGISTERED PROFESSIONAL ENGINEER JENS ERLINGSSON No. 8249 Exp. 9/30/06 ELECTRICAL STATE OF CALIFORNIA

PB POWER, Inc.
A Parsons Brinckerhoff Company
303 Second St., Suite 700N
San Francisco, CA 94107-1317

The State of California or its officers or agents shall not be responsible for the accuracy or completeness of electronic copies of this plan sheet.

Caltrans now has a web site! To get to the web site, go to http://www.dot.ca.gov

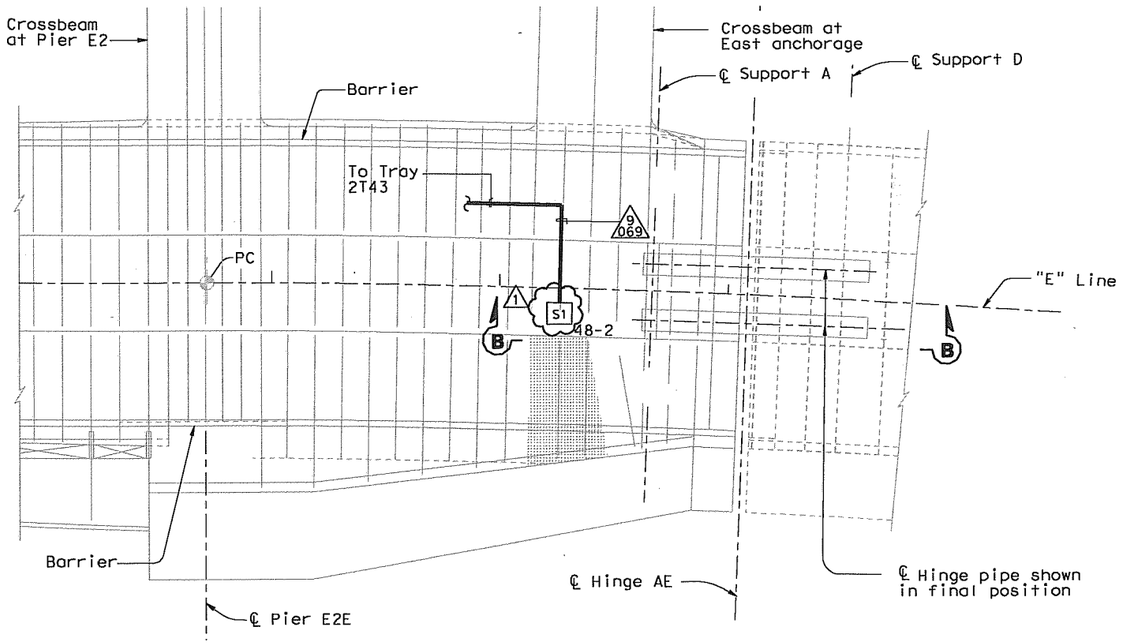

FRAMING PLAN
SCALE 1:250

NOTES:

1. For other related work not shown on this drawing, see Electrical Special Provisions.
2. References: 1
   - For nameplates, sensor enclosures and recorder schedules, see sheets E-379, E-380 and E-381.
   - For cable block diagram, see sheets E-382, E-383 and E-384.
   - For general notes of the strong motion detection system, see sheet E-361.
   - For circuit and conduit/cable tray schedules, see sheets starting at E-401.

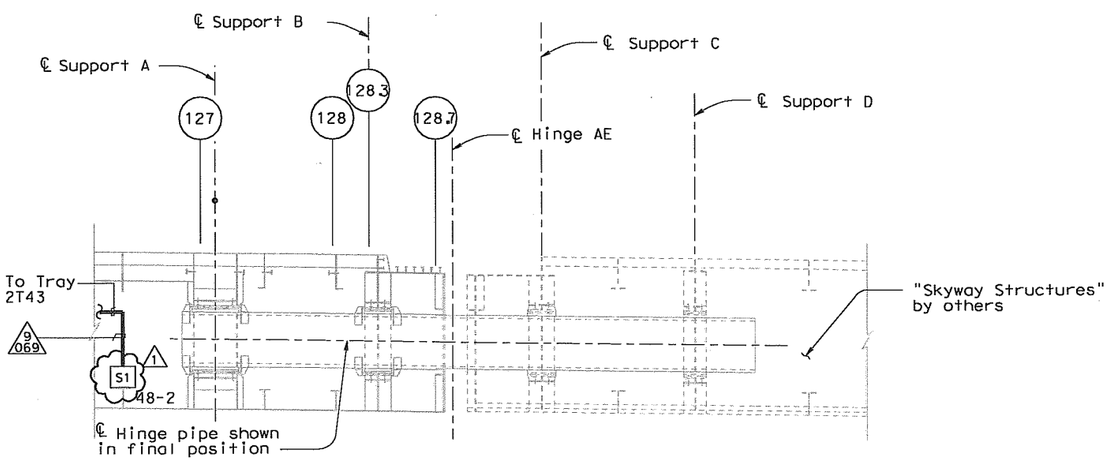

SECTION B-B
SCALE 1:1000

REGISTERED PROFESSIONAL ENGINEER FADI WALIEDDINE No. 11465 Exp. 12/31/2009 ELECTRICAL STATE OF CALIFORNIA

FOR REVISION ONLY

REQUEST FOR INFORMATION NOT ADDRESSED IN THIS CCO REMAIN IN FORCE

MARK	DATE	DESCRIPTIONS	BY	CH'D	CCO#
1	10/03/08	STRONG MOTION SYSTEM	RG	FW	74

REVISIONS

CONTRACT CHANGE ORDER NO. 74
SHEET 17 OF 27

STRONG MOTION DETECTION SYSTEM
SAS SUPERSTRUCTURE
HINGE A CONDUIT AND SENSOR LOCATION
SCALE AS NOTED

E-374

THIS PLAN IS ACCURATE FOR ELECTRICAL WORK ONLY.

DATE	REVISED BY	DATE REVISED
2/02	JW	FK 4/02

CALCULATED/DESIGNED BY
CHECKED BY

DESIGN OVERSIGHT
BEHZAD GOLEMOHAMMADI

STATE OF CALIFORNIA - DEPARTMENT OF TRANSPORTATION
Caltrans

FOR REDUCED PLANS ORIGINAL SCALE IS IN MILLIMETERS 0 20 40 60 80

DGN FILE =>T:\13103\MS\pse\SAS Struc\CCO\SAS CCO74\Issued for Submittal 2008-10-03\04-0120F1_0342R01.dgn
USERNAME =>llorico
CU 04251
EA 0120F1

LAST REVISION 00-00-00
DATE PLOTTED => 10/2/2008
TIME PLOTTED => 6:04:29 PM

DIST	COUNTY	ROUTE	KILOMETER POST TOTAL PROJECT	SHEET No	TOTAL SHEETS
04	SF	80	13.2/13.9	343 R2	1204

REGISTERED ELECTRICAL ENGINEER 12/19/02 DATE

12-6-04
PLANS APPROVAL DATE

REGISTERED PROFESSIONAL ENGINEER JENS ERLINGSSON No. 8249 Exp. 9/30/06 ELECTRICAL STATE OF CALIFORNIA

PB POWER, Inc.
A Parsons Brinckerhoff Company
303 Second St., Suite 700N
San Francisco, CA 94107-1317

The State of California or its officers or agents shall not be responsible for the accuracy or completeness of electronic copies of this plan sheet.

Caltrans now has a web site! To get to the web site, go to http://www.dot.ca.gov

Caltrans Metric

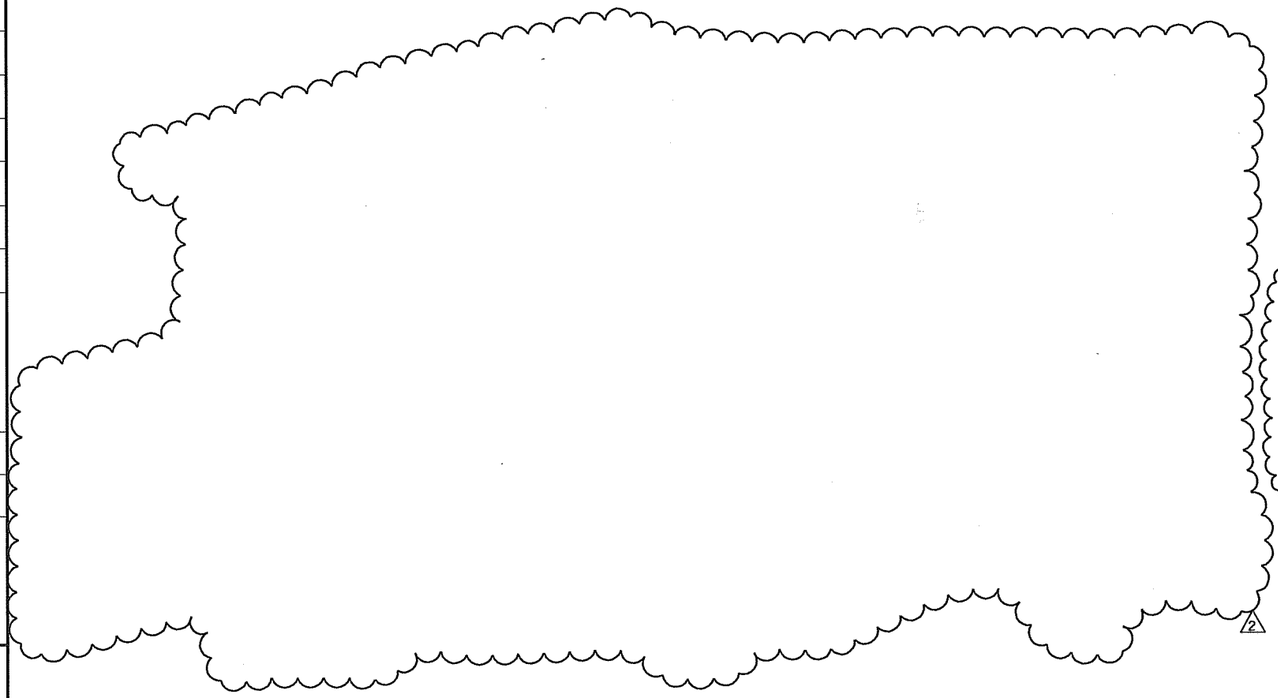

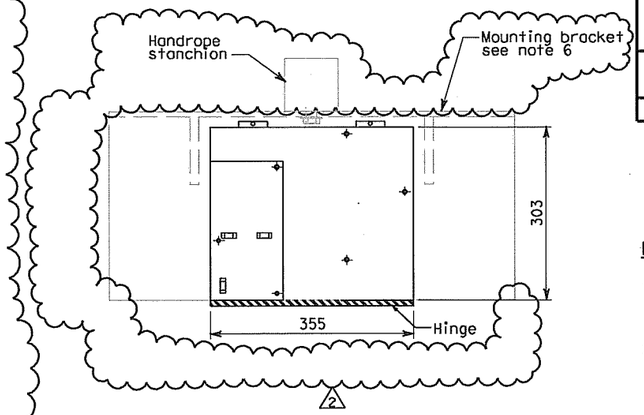

TYPE 6
SENSOR ENCLOSURE
NUMBER 22-3 & 36-3 2
STAINLESS STEEL BOX
NO SCALE

NOTES:

1. For other related work not shown on this drawing, see Electrical Special Provisions.
2. References: 2
   - For nameplates, sensor enclosures and recorder schedules, see sheets E-379, E-380 and E-381.
   - For cable block diagram, see sheets E-382, E-383 and E-384.
   - For general notes of the strong motion detection system, see sheet E-361.
   - For circuit and conduit/cable tray schedules, see sheets starting at E-401.
3. All conduits and fittings located outside or inside pier shall be rigid galvanized steel, PVC coated.
4. For sensor enclosures bolt hole details, see AS-sheets.
5. For stanchion details, see Structural sheets.
6. 2 For mounting bracket details, see Structural Sheets.

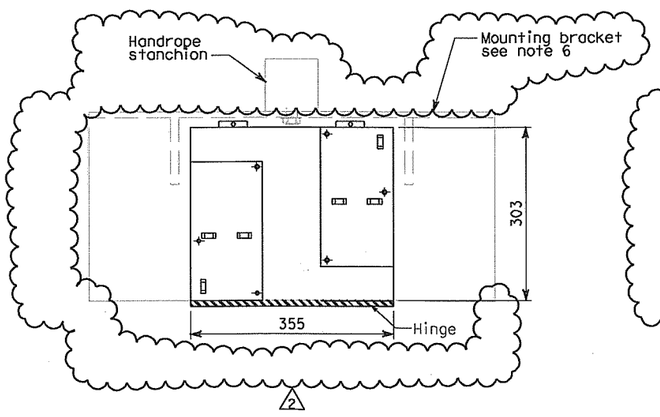

TYPE 6
SENSOR ENCLOSURE
NUMBER 35-3
STAINLESS STEEL BOX
NO SCALE

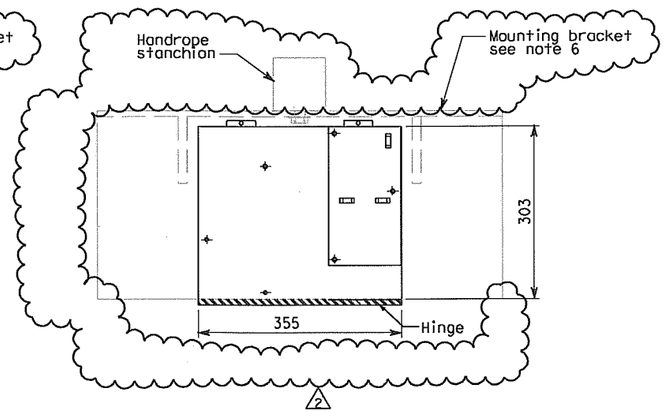

TYPE 6
SENSOR ENCLOSURE
NUMBER 21-3 2
STAINLESS STEEL BOX
NO SCALE

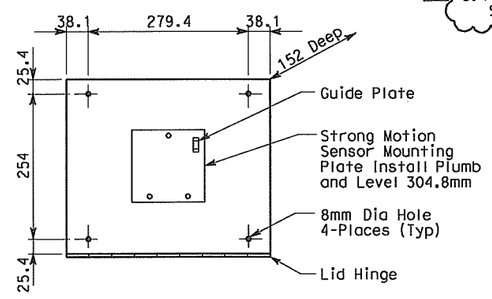

TYPE 7
SENSOR ENCLOSURE
STAINLESS STEEL BOX
NO SCALE

REQUEST FOR INFORMATION NOT ADDRESSED IN THIS CCO REMAIN IN FORCE					
2	10/03/08	STRONG MOTION SYSTEM	RG	FW	74
1	02/19/08	ELECTRICAL MODIFICATIONS	MP EL	RR	42
MARK	DATE	DESCRIPTIONS	BY	CH'D	CCO#
REVISIONS					

CONTRACT CHANGE ORDER NO. 74
SHEET 18 OF 27

REGISTERED PROFESSIONAL ENGINEER FADI WALIEDDINE No. 11465 Exp. 12/31/2009 ELECTRICAL STATE OF CALIFORNIA

FOR REVISION ONLY

DETAILS
STRONG MOTION DETECTION SYSTEM
SUSPENSION CABLE SENSOR ENCLOSURES AND MOUNTING
SCALE AS NOTED

E-377

THIS PLAN IS ACCURATE FOR ELECTRICAL WORK ONLY.

ALL DIMENSIONS ARE IN MILLIMETERS UNLESS OTHERWISE SHOWN.

FOR REDUCED PLANS ORIGINAL SCALE IS IN MILLIMETERS 0 20 40 60 80

DGN FILE =>T:\13103\MS\pse\SAS Struc\CCO\SAS CCO74\Issued for Submittal 2008-10-03\04-0120f1_0343R02.dgn
USERNAME =>liorico

CU 04251 | EA 0120F1

DATE PLOTTED => 10/2/2008
TIME PLOTTED => 6:04:56 PM

LAST REVISION 00-00-00

STATE OF CALIFORNIA - DEPARTMENT OF TRANSPORTATION
Caltrans

DESIGN OVERSIGHT
BEHZAD GOLEMOHAMMADI

CALCULATED/DESIGNED BY EDC
CHECKED BY KG

DATE	REVISED BY	DATE REVISED
10/01	11/01	3/04

DIST	COUNTY	ROUTE	KILOMETER POST TOTAL PROJECT	SHEET No	TOTAL SHEETS
04	SF	80	13.2/13.9	344 R2	1204

REGISTERED ELECTRICAL ENGINEER 12/19/02 DATE

12-6-04
PLANS APPROVAL DATE

REGISTERED PROFESSIONAL ENGINEER JENS ERLINGSSON No. 8249 Exp. 9/30/06 ELECTRICAL STATE OF CALIFORNIA

PB POWER, Inc.
A Parsons Brinckerhoff Company
303 Second St., Suite 700N
San Francisco, CA 94107-1317

The State of California or its officers or agents shall not be responsible for the accuracy or completeness of electronic copies of this plan sheet.

Caltrans now has a web site! To get to the web site, go to http://www.dot.ca.gov

Caltrans Metric

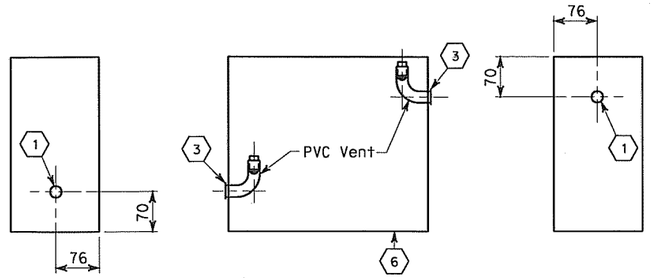

SIDE VIEW ELEVATION SIDE VIEW

ENCLOSURE VENTING DETAIL
VERTICAL MOUNT

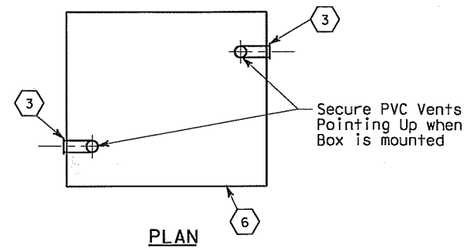

PLAN

ENCLOSURE VENTING DETAIL
HORIZONTAL MOUNT

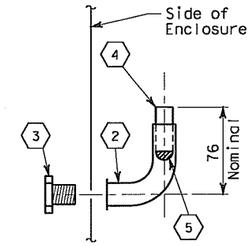

PVC VENT DETAIL

SHEET NOTES:

1. Punch hole for 27C.
2. 27C, schedule 40 PVC, 90 °elbow (female threaded-female slip).
3. 27 chase nipple, zinc.
4. 27C, schedule 40 PVC. Secure item in place with PVC cement (length as required, cut after installation).
5. Hose screen, Stainless steel screen material (used in washing machine).
6. 3.2 mm diameter drain hole. Drill at the lowest point of the box to drain any moisture.
7. Enclosures for Strong Motion Recorders #3 and #2 shall be Caltrans Type S, corrosion resistant without shelves or police panels.
8. See Sheet E-379 for nameplate schedule for engravings and materials.

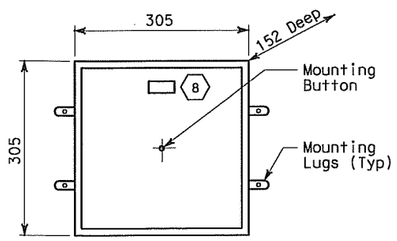

TYPE 1
CAST METAL BOX

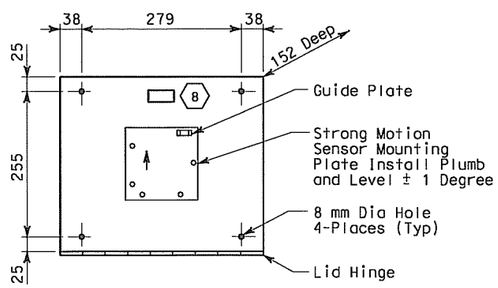

TYPE 2
STAINLESS STEEL BOX

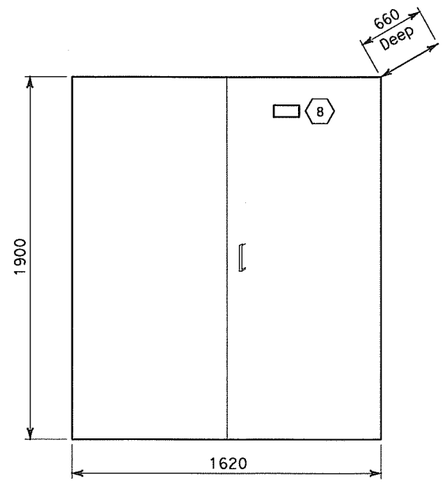

STRONG MOTION RECORDER (7)
CALTRANS TYPE S

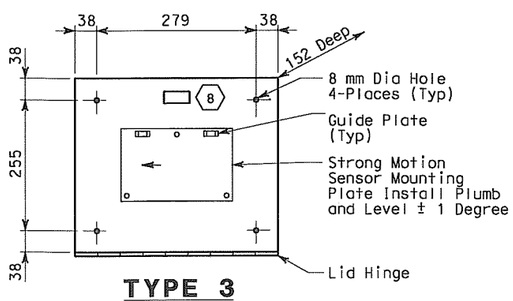

TYPE 3
STAINLESS STEEL BOX

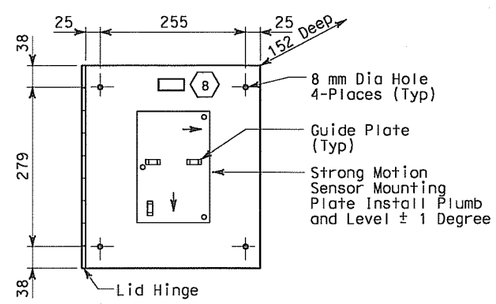

TYPE 4
STAINLESS STEEL BOX

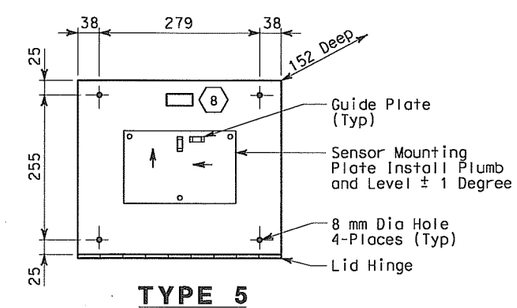

TYPE 5
STAINLESS STEEL BOX

ENCLOSURE DETAILS
FRONT VIEW

NOTES:

1. The high and low vent sides shall be selected as required to facilitate conduit entrances and mounting location.
2. Strong motion sensor enclosures and mounting plates shall be installed parallel and perpendicular to the structure unless otherwise noted. (2)
3. Strong motion enclosures shall be mounted to concrete with concrete fasteners, 6.35 dia, 40 mm depth embedment and allowable working load of tension at 1.223 kN and shear 2.91 kN. Enclosures mounted on structural steel shall be drill and tap. The strong motion sensor mounting plate shall be bolted through the enclosure to the structural steel. All hardware shall be stainless steel. (2)
4. For Downhole Enclosures details, see Sheet E-366A. (2)

REGISTERED PROFESSIONAL ENGINEER FADI WALIEDDINE No. 11465 Exp. 12/31/2009 ELECTRICAL STATE OF CALIFORNIA

FOR REVISION ONLY

REQUEST FOR INFORMATION NOT ADDRESSED IN THIS CCO REMAIN IN FORCE					
2	10/03/08	STRONG MOTION SYSTEM	RG	FW	74
1	02/19/08	ELECTRICAL MODIFICATIONS	MP EL	RR	42
MARK	DATE	DESCRIPTIONS	BY	CH'D	CCO#
		REVISIONS			

CONTRACT CHANGE ORDER NO. 74
SHEET 19 OF 27

DETAILS
STRONG MOTION DETECTION SYSTEM SENSOR AND RECORDER ENCLOSURES
NO SCALE

E-378

THIS PLAN IS ACCURATE FOR ELECTRICAL WORK ONLY.

ALL DIMENSIONS ARE IN MILLIMETERS UNLESS OTHERWISE SHOWN.

FOR REDUCED PLANS ORIGINAL SCALE IS IN MILLIMETERS 0 20 40 60 80

DGN FILE =>T:\13103\MS\pse\SAS Struc\CCO\SAS CCO74\Issued for Submittal 2008-10-03\04-0120f1_0344R02.dgn
USERNAME =>garciar

CU 04251 EA 0120F1

DATE PLOTTED => 10/3/2008
TIME PLOTTED => 4:06:32 PM

LAST REVISION 00-00-00

STATE OF CALIFORNIA - DEPARTMENT OF TRANSPORTATION
Caltrans

DESIGN OVERSIGHT
BEHZAD GOLEMOHAMMADI

CALCULATED/ DESIGNED BY	EJL	DATE 10/00	REVISED BY
CHECKED BY	CYF	11/00	DATE REVISED

DIST	COUNTY	ROUTE	KILOMETER POST TOTAL PROJECT	SHEET No	TOTAL SHEETS
04	SF	80	13.2/13.9	345 R1	1204

REGISTERED ELECTRICAL ENGINEER 12/19/02 DATE

12-6-04
PLANS APPROVAL DATE

REGISTERED PROFESSIONAL ENGINEER JENS ERLINGSSON No. 8249 Exp. 9/30/06 ELECTRICAL STATE OF CALIFORNIA

PB POWER, Inc.
A Parsons Brinckerhoff Company
303 Second St., Suite 700N
San Francisco, CA 94107-1317

The State of California or its officers or agents shall not be responsible for the accuracy or completeness of electronic copies of this plan sheet.

Caltrans now has a web site! To get to the web site, go to http://www.dot.ca.gov

Caltrans Metric

STRONG MOTION RECORDER SCHEDULE

CKT No.	Cable Type	Routing From	Routing To	Remarks
2910-2	IC	STRONG MOTION RECORDER #1	STRONG MOTION RECORDER #2-A	
2910-3	SSC			
2910-4	ISDN	STRONG MOTION RECORDER #1	TELEPHONE TERM. BOX #TEL-01E	
2910-6	IC	STRONG MOTION RECORDER #2-A	STRONG MOTION RECORDER #2-B	
2910-7	IC	STRONG MOTION RECORDER #2-B	STRONG MOTION RECORDER #3	
2910-8	SSC			
UP105-12	POWER	STRONG MOTION RECORDER #2-A	UTILITY PANEL UP-105	
2910-5	IC	STRONG MOTION RECORDER #2-A	RTU #10E	
2910-10	ISDN	STRONG MOTION RECORDER #2-B	TELEPHONE TERM. BOX #TEL-5	
UP105-14	POWER	STRONG MOTION RECORDER #2-B	UTILITY PANEL UP-105	
2910-13	IC	STRONG MOTION RECORDER #2-B	STRONG MOTION SENSOR ENCLOSURE 12-1 (EXISTING)	SENSOR ENCLOSURE 12-1 LOCATED AT HINGE AE IN THE SKYWAY STRUCTURE
2910-9	IC	STRONG MOTION RECORDER #2-B	RTU #10W	
	SSC			
UP210-12	POWER	STRONG MOTION RECORDER #3	UTILITY PANEL UP-210	
2910-12	ISDN	STRONG MOTION RECORDER #3	TELEPHONE TERM. BOX #TEL-5	
2910-11	IC	STRONG MOTION RECORDER #3	RTU #10E	

STRONG MOTION SENSOR ENCLOSURE NAME PLATE SCHEDULE

ENCLOSURE TYPE	Mounting Location LINE NO. 1	Mounting Location LINE NO. 2	Quantity
1	STRONG MOTION SENSOR	ENCLOSURE NO. 14-2	1
	STRONG MOTION SENSOR	ENCLOSURE NO. 15-2	1
	STRONG MOTION SENSOR	ENCLOSURE NO. 16-2	1
	STRONG MOTION SENSOR	ENCLOSURE NO. 24-3	1
	STRONG MOTION SENSOR	ENCLOSURE NO. 25-3	1
	STRONG MOTION SENSOR	ENCLOSURE NO. 26-3	1
	STRONG MOTION SENSOR	ENCLOSURE NO. 40-2	1
	STRONG MOTION SENSOR	ENCLOSURE NO. 41-2	1
	STRONG MOTION SENSOR	ENCLOSURE NO. 42-2	1

STRONG MOTION SENSOR ENCLOSURE NAME PLATE SCHEDULE

ENCLOSURE TYPE	Mounting Location LINE NO. 1	Mounting Location LINE NO. 2	Quantity
2	STRONG MOTION SENSOR	ENCLOSURE NO. 29-2	1
	STRONG MOTION SENSOR	ENCLOSURE NO. 37-3	1
	STRONG MOTION SENSOR	ENCLOSURE NO. 48-2	1
3	STRONG MOTION SENSOR	ENCLOSURE NO. 45-2	1
	STRONG MOTION SENSOR	ENCLOSURE NO. 46-2	1
4	STRONG MOTION SENSOR	ENCLOSURE NO. 17-2	1
	STRONG MOTION SENSOR	ENCLOSURE NO. 19-2	1
	STRONG MOTION SENSOR	ENCLOSURE NO. 27-2	1
	STRONG MOTION SENSOR	ENCLOSURE NO. 30-3	1
	STRONG MOTION SENSOR	ENCLOSURE NO. 31-3	1
	STRONG MOTION SENSOR	ENCLOSURE NO. 32-3	1
	STRONG MOTION SENSOR	ENCLOSURE NO. 33-2	1
	STRONG MOTION SENSOR	ENCLOSURE NO. 38-2	1
	STRONG MOTION SENSOR	ENCLOSURE NO. 44-2	1
	STRONG MOTION SENSOR	ENCLOSURE NO. 47-2	1
5	STRONG MOTION SENSOR	ENCLOSURE NO. 18-2	1
	STRONG MOTION SENSOR	ENCLOSURE NO. 43-2	1
6	STRONG MOTION SENSOR	ENCLOSURE NO. 21-3	1
	STRONG MOTION SENSOR	ENCLOSURE NO. 22-3	1
	STRONG MOTION SENSOR	ENCLOSURE NO. 35-3	1
	STRONG MOTION SENSOR	ENCLOSURE NO. 36-3	1
7	STRONG MOTION SENSOR	ENCLOSURE NO. 20-2	1
	STRONG MOTION SENSOR	ENCLOSURE NO. 28-2	1
	STRONG MOTION SENSOR	ENCLOSURE NO. 34-2	1
	STRONG MOTION SENSOR	ENCLOSURE NO. 39-2	1
~~Down Hole~~ Junction Box	STRONG MOTION SENSOR	ENCLOSURE NO. 23-3	1
Caltrans Type S	LINE NO. 1	STRONG MOTION RECORDER NO. 2	1
	LINE NO. 2	BOX A	1
	LINE NO. 1	STRONG MOTION RECORDER NO. 2	1
	LINE NO. 2	BOX B	1
Recorder Enclosure	LINE NO. 1	STRONG MOTION RECORDER NO. 3	1

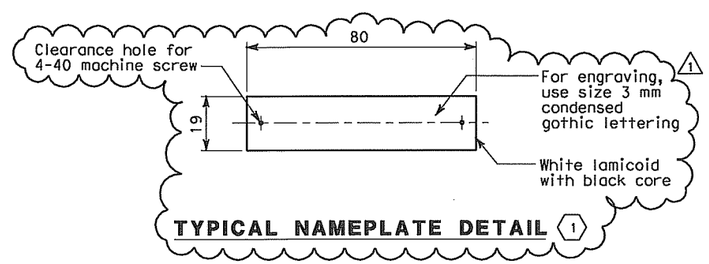

TYPICAL NAMEPLATE DETAIL (1)

SHEET NOTE:

(1) Nameplate shall be mounted to the enclosure door panel with 4-40 stainless steel machine screws. The enclosure door panel to be drilled and tapped. (No self-tapping screws).

NOTES:

1. For other related work not shown on this drawing, see Electrical Special Provisions.
2. References:
   - For cable block diagram, see sheets E-382, E-383 and E-384.
   - For general notes of the strong motion detection system, see sheet E-361.
   - For circuit and conduit/cable tray schedules, see sheets starting at E-401.

REGISTERED PROFESSIONAL ENGINEER FADI WALI EDDINE No. 11465 Exp. 12/31/2009 ELECTRICAL STATE OF CALIFORNIA

FOR REVISION ONLY

REQUEST FOR INFORMATION NOT ADDRESSED IN THIS CCO REMAIN IN FORCE

MARK	DATE	DESCRIPTIONS	BY	CH'D	CCO#
1	10/03/08	STRONG MOTION SYSTEM	RG	FW	74

REVISIONS

CONTRACT CHANGE ORDER NO. 74
SHEET 20 OF 27

DETAILS
STRONG MOTION DETECTION SYSTEM RECORDER SCHEDULES
NO SCALE

E-379

REVISED BY	DATE REVISED

CALCULATED/DESIGNED BY	DATE 2/02
JW	5/02
CHECKED BY	

DESIGN OVERSIGHT
BEHZAD GOLEMOHAMMADI

STATE OF CALIFORNIA - DEPARTMENT OF TRANSPORTATION
Caltrans

LAST REVISION 00-00-00
DATE PLOTTED => 10/2/2008
TIME PLOTTED => 6:06:59 PM

FOR REDUCED PLANS ORIGINAL SCALE IS IN MILLIMETERS 0 20 40 60 80

DGN FILE =>T:\13103\MS\pse\SAS Struc\CCO\SAS CCO74\Issued for Submittal 2008-10-03\04-0120F1_0345R01.dgn
USERNAME =>llorico
CU 04251
EA 0120F1

DIST	COUNTY	ROUTE	KILOMETER POST TOTAL PROJECT	SHEET No	TOTAL SHEETS
04	SF	80	13.2/13.9	346 R1	1204

REGISTERED ELECTRICAL ENGINEER 12/19/02 DATE

12-6-04
PLANS APPROVAL DATE

REGISTERED PROFESSIONAL ENGINEER JENS ERLINGSSON No. 8249 Exp. 9/30/06 ELECTRICAL STATE OF CALIFORNIA

PB POWER, Inc.
A Parsons Brinckerhoff Company
303 Second St., Suite 700N
San Francisco, CA 94107-1317

The State of California or its officers or agents shall not be responsible for the accuracy or completeness of electronic copies of this plan sheet.

Caltrans now has a web site! To get to the web site, go to http://www.dot.ca.gov

Caltrans Metric

STRONG MOTION DETECTION SYSTEM SCHEDULE

CKT No.	Cable Type	Number of Sensors	Sensor Enclosure No.	Enclosure Type No.	Mounting Location	Hinge Location	Recorder Connection	Remarks
2900-142A	SSC	1	14-2	1	Pier W2E, top of footing, southwest corner, just inside retaining wall.	N/A	Strong Motion Recorder #2-Box A	Cast metal box
2900-152A 2900-152B 2900-152C	SSC SSC SSC	3	15-2	1	Pier W2E, top of footing, southeast corner, just inside retaining wall.	N/A	Strong Motion Recorder #2-Box A	Cast metal box
2900-162A 2900-162B	SSC SSC	2	16-2	1	Pier W2E, top of footing, northeast corner, just inside retaining wall.	N/A	Strong Motion Recorder #2-Box A	Cast metal box
2900-172A 2900-172B 2900-172C	SSC SSC SSC	3	17-2	4 1	Inside EB girder (PP8) on south face of south longitudinal shear plate.	Down	Strong Motion Recorder #2-Box A	
2900-182A 2900-182B	SSC SSC	2	18-2	5	Inside WB girder (PP8) on south face of south longitudinal shear plate.	West 1	Strong Motion Recorder #2-Box B	
2900-192A 2900-192B 2900-192C	SSC SSC SSC	3	19-2	4 1	At midspan west of tower (PP24), in box girder for "E" line, on south face ~~of south longitudinal shear~~ plate.	Down	Strong Motion Recorder #2-Box A	
2900-202A	SSC	1	20-2	7 1	At midspan west of tower (PP24), in box girder for "W" line, on north face ~~of north longitudinal shear~~ plate.	Down	Strong Motion Recorder #2-Box B	
2900-213A 2900-213B 2900-213C	SSC SSC SSC	3	21-3	6 1	At midspan west of tower (PP24), on south cable, mounted on bottom of stanchion on inboard side of suspender cable clamp.	Special	Strong Motion Recorder #3	See sheet E-377.
2900-223A 2900-223B 2900-223C	SSC SSC SSC	3	22-3	6 1	At midspan west of tower (PP24), on north cable, mounted on bottom of stanchion on inboard side of suspender cable clamp.	Special	Strong Motion Recorder #3	See sheet E-377.
2900-233A 2900-233B 2900-233C	SSC SSC SSC	3	23-3	N/A 1	Downhole in pile of tower, at pile cap elevation.	N/A	Strong Motion Recorder #3	Pile-type downhole
2900-243A	SSC	1	24-3	1	Tower, top of footing, southwest corner.	N/A	Strong Motion Recorder #3	Cast metal box
2900-253A 2900-253B 2900-253C	SSC SSC SSC	3	25-3	1	Tower, top of footing, southwest corner.	N/A	Strong Motion Recorder #3	Cast metal box

NOTE:

1. For reference drawings, see sheet E-381.

REGISTERED PROFESSIONAL ENGINEER FADI WALIEDDINE No. 11465 Exp. 12/31/2009 ELECTRICAL STATE OF CALIFORNIA

FOR REVISION ONLY

REQUEST FOR INFORMATION NOT ADDRESSED IN THIS CCO REMAIN IN FORCE

MARK	DATE	DESCRIPTIONS	BY	CH'D	CCO#
1	10/03/08	STRONG MOTION SYSTEM	RG	FW	74

REVISIONS

CONTRACT CHANGE ORDER NO. 74
SHEET 21 OF 27

DETAILS
STRONG MOTION DETECTION SYSTEM SENSOR SCHEDULES
NO SCALE

E-380

STATE OF CALIFORNIA - DEPARTMENT OF TRANSPORTATION
Caltrans

DESIGN OVERSIGHT
BEHZAD GOLEMOHAMMADI

CALCULATED/DESIGNED BY JW DATE 2/02 REVISED BY
CHECKED BY DATE REVISED

LAST REVISION 00-00-00
DATE PLOTTED => 10/2/2008
TIME PLOTTED => 6:07:30 PM

FOR REDUCED PLANS ORIGINAL SCALE IS IN MILLIMETERS 0 20 40 60 80

DGN FILE =>T:\13103\MS\pse\SAS Struc\CCO\SAS CCO74\Issued for Submittal 2008-10-03\04-0120f1_0346R01.dgn
USERNAME =>llorico
CU 04251
EA 0120F1

STRONG MOTION DETECTION SYSTEM SCHEDULE

CKT No.	Cable Type	Number of Sensors	Sensor Enclosure No.	Enclosure Type No.	Mounting Location	Hinge Location	Recorder Connection	Remarks
2900-263A 2900-263B	SSC SSC	2	26-3	1	Tower, top of footing, northeast corner.	N/A	Strong Motion Recorder #3	Cast metal box
2900-272A 2900-272B 2900-272C	SSC SSC SSC	3	27-2	4	At tower, in box girder for "E" line, on south face of south longitudinal shear plate.	Down	Strong Motion Recorder #2-Box A	
2900-282A	SSC	1	28-2	7	At tower, in box girder for "W" line, on north face of north longitudinal shear plate.	Down	Strong Motion Recorder #2-Box B	
2900-292A	SSC	1	29-2	2 w/o plate	Between tower and eastbound structure, behind guardrail, transverse displacement sensor.*	Down	Strong Motion Recorder #2-Box A	Displacement sensor in SST box w/o venting.
2900-303A 2900-303B 2900-303C 2900-303D 2900-303E	SSC SSC SSC SSC SSC	5	30-3	4	Tower, inside northeast quadrant tower shaft at elev. 54 m, on east face of the west wall.	North	Strong Motion Recorder #3	(Includes 2 cables for Tilt sensors) Put a "T" body at the conduit entrance to the enclosure, with the extra opening temporarily plugged.
2900-313A 2900-313B 2900-313C	SSC SSC SSC	3	31-3	4	Tower, inside northeast quadrant tower shaft at elev. 94 m, on east face of the west wall.	North	Strong Motion Recorder #3	
2900-323A 2900-323B 2900-323C 2900-323D 2900-323E	SSC SSC SSC SSC SSC	5	32-3	4	Tower, inside northeast quadrant tower shaft at top of tower (elev. 156.750 m), on east face of the west wall.	North	Strong Motion Recorder #3	(Includes 2 cables for Tilt sensors) Put a "T" body at the conduit entrance to the enclosure, with the extra opening temporarily plugged.
2900-332A 2900-332B 2900-332C	SSC SSC SSC	3	33-2	4	At 1/3 pt of span east of tower (PP68), in box girder for "E" line, on south face of south longitudinal shear plate.	Down	Strong Motion Recorder #2-Box A	
2900-342A	SSC	1	34-2	7	At 1/3 pt of span east of tower (PP68), in box girder for "W" line, on north face of north longitudinal shear plate.	Down	Strong Motion Recorder #2-Box B	
2900-353A 2900-353B 2900-353C 2900-353D 2900-353E 2900-353F	SSC SSC SSC SSC SSC SSC	6	35-3	6	At 1/3 pt of span east of tower (PP68), on south cable, mounted to bottom of stanchion on inboard side of suspender cable clamp.	Special	Strong Motion Recorder #3	(Includes 3 accelerometers and 3 rotational sensors).
2900-363A 2900-363B 2900-363C	SSC SSC SSC	3	36-3	6	At 1/3 pt of span east of tower (PP68), on north cable, mounted to bottom of stanchion on inboard side of suspender cable clamp.	Special	Strong Motion Recorder #3	
2900-373A 2900-373B	SSC SSC	2	37-3	2 w/o plate	Tower, inside northeast quadrant tower shaft, at base, on east face of west wall.*	Down	Strong Motion Recorder #3	Two Tilt sensor in SST box w/o venting.
2900-382A 2900-382B 2900-382C	SSC SSC SSC	3	38-2	4	At 2/3 pt of span east of tower (PP94), in box girder for "E" line, on south face of south longitudinal shear plate.	Down	Strong Motion Recorder #2-Box A	
2900-392A	SSC	1	39-2	7	At 2/3 pt of span east of tower (PP94), in box girder for "W" line, on north face of north longitudinal shear plate.	Down	Strong Motion Recorder #2-Box B	

NOTES:

1. For other related work not shown on this drawing, see Electrical Special Provisions.
2. References:
   - For cable block diagram, see sheets E-382, E-383 and E-384.
   - For general notes of the strong motion detection system, see sheet E-361.
   - For circuit and conduit/cable tray schedules, see sheets starting at E-401.
3. All conduits and fittings located outside or inside pier shall be rigid galvanized steel, PVC coated.
4. Secure enclosure to concrete per note 3 on sheet E-378.
5. * = Displacement and tilt sensors will be installed by CDMG and do not need a pigtail or plate; leave 6 m of extra cable in enclosure specified.

Caltrans Metric

REGISTERED PROFESSIONAL ENGINEER FADI WALIEDDINE No. 11465 Exp. 12/31/2009 ELECTRICAL STATE OF CALIFORNIA

DIST	COUNTY	ROUTE	KILOMETER POST TOTAL PROJECT	SHEET No	TOTAL SHEETS
04	SF	80	13.2/13.9	347 R1	1204

12/19/02
REGISTERED ELECTRICAL ENGINEER DATE

12-6-04
PLANS APPROVAL DATE

REGISTERED PROFESSIONAL ENGINEER JENS ERLINGSSON No. 8249 Exp. 9/30/06 ELECTRICAL STATE OF CALIFORNIA

PB POWER, Inc.
A Parsons Brinckerhoff Company
303 Second St., Suite 700N
San Francisco, CA 94107-1317

The State of California or its officers or agents shall not be responsible for the accuracy or completeness of electronic copies of this plan sheet.

Caltrans now has a web site! To get to the web site, go to http://www.dot.ca.gov

REQUEST FOR INFORMATION NOT ADDRESSED IN THIS CCO REMAIN IN FORCE

MARK	DATE	DESCRIPTIONS	BY	CH'D	CCO#
1	10/03/08	STRONG MOTION SYSTEM	RG	FW	74

REVISIONS

FOR REVISION ONLY

CONTRACT CHANGE ORDER NO. 74
SHEET 22 OF 27

STRONG MOTION DETECTION SYSTEM SCHEDULE

CKT No.	Cable Type	Number of Sensors	Sensor Enclosure No.	Enclosure Type No.	Mounting Location	Hinge Location	Recorder Connection	Remarks
2900-402A	SSC	1	40-2	1	Pier E2, top of footing for Pier E2E, southwest corner.	N/A	Strong Motion Recorder #2-Box A	Cast metal box
2900-412A 2900-412B 2900-412C	SSC SSC SSC	3	41-2	1	Pier E2, top of footing for Pier E2E, southeast corner.	N/A	Strong Motion Recorder #2-Box A	Cast metal box
2900-422A 2900-422B	SSC SSC	2	42-2	1	Pier E2, top of footing for Pier E2E, northeast corner.	N/A	Strong Motion Recorder #2-Box A	Cast metal box
2900-432A 2900-432B	SSC SSC	2	43-2	5	Pier E2, inside steel box girder at "E" line, on west vertical face of transverse steel plate, 1 meter the girder plate.	North	Strong Motion Recorder #2-Box A	
2900-442A 2900-442B 2900-442C	SSC SSC SSC	3	44-2	4	East end of main span west side of hinge AE (PP127.5), at south edge of horizontal floor on horizontal flange of floor beam.	West	Strong Motion Recorder #2-Box A	
2900-452A 2900-452B	SSC SSC	2	45-2	3	East end of main span west side of hinge AE (PP127.5), at north edge of horizontal floor on horizontal flange of floor beam.	North	Strong Motion Recorder #2-Box A	
2900-462A 2900-462B	SSC SSC	2	46-2	3	East end of main span west side of hinge AW (PP127.5), at south edge of horizontal floor on horizontal flange of floor beam.	North	Strong Motion Recorder #2-Box B	
2900-472A 2900-472B 2900-472C	SSC SSC SSC	3	47-2	4	East end of main span west side of hinge AW (PP127.5), at north edge of horizontal floor on horizontal flange of floor beam.	West	Strong Motion Recorder #2-Box B	
2900-482A	SSC	1	48-2	2 w/o plate	East end of main span, west side of hinge AE, (PP126.5), on horizontal flange of floor beam.*	West	Strong Motion Recorder #2-Box B	Displacement sensor in SST box w/o vent.

DETAILS
STRONG MOTION DETECTION SYSTEM SENSOR SCHEDULES
NO SCALE

E-381

STATE OF CALIFORNIA - DEPARTMENT OF TRANSPORTATION
Caltrans

DESIGN OVERSIGHT: BEHZAD GOLEMOHAMMADI

CALCULATED/DESIGNED BY: JW — DATE: 2/02 — REVISED BY — DATE REVISED
CHECKED BY

LAST REVISION 00-00-00 — DATE PLOTTED => 10/2/2008 — TIME PLOTTED => 6:07:46 PM

FOR REDUCED PLANS ORIGINAL SCALE IS IN MILLIMETERS 0 20 40 60 80

DGN FILE =>T:\13103\MS\pse\SAS Struc\CCO\SAS CC074\Issued for Submittal 2008-10-03\04-0120f1_0347R01.dgn
USERNAME =>llorico

CU 04251 | EA 0120F1

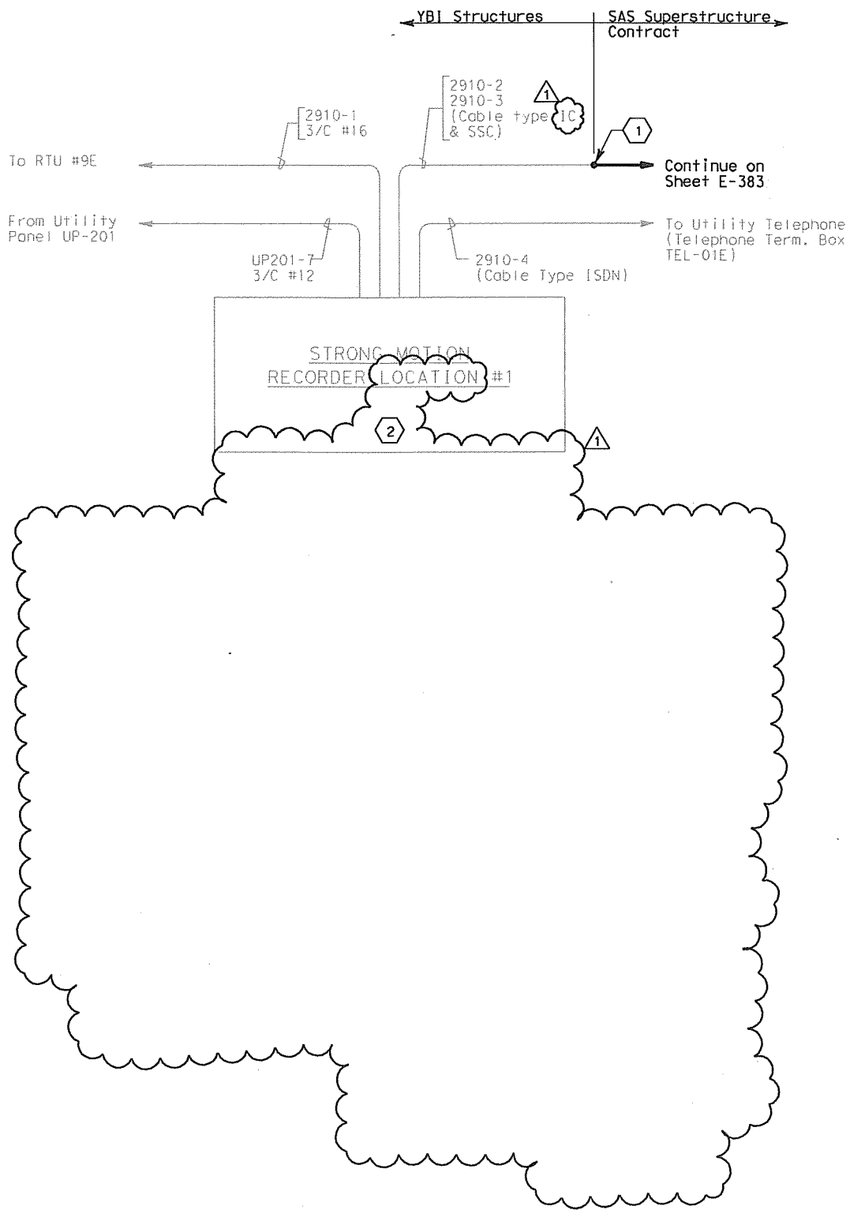

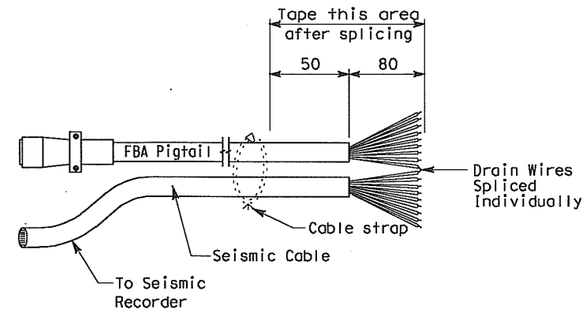

PIGTAIL SPLICING DETAIL

1 (THIS DETAIL IS APPLICABLE TO CABLE SSC IN ALL STRONG MOTION SENSOR ENCLOSURES)

SPLICING INSTRUCTIONS:

1. Strip outer jacket cables back 80 mm.
2. Separate individual conductors and drain wires and splice matching colored wires and drain wires using jelly filled splice connectors and crimping tool.
3. Secure cables with cable straps approximately 50 mm from end of outer jacket.
4. Tape from cable strap to splice with vinyl electrical tape (3M Scotch Super 88 or equal). Tape shall cover all splices. Coat with sealing compound or equal, then tape with self-fusing tape and an outer layer of vinyl electrical tape.

Note: Insure crimps are secure before taping.

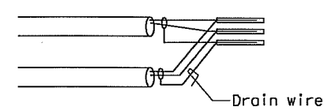

SPLICING DETAIL

1 Pair spliced (Typ. of 4)

DIST	COUNTY	ROUTE	KILOMETER POST TOTAL PROJECT	SHEET No	TOTAL SHEETS
04	SF	80	13.2/13.9	348 R1	1204

REGISTERED ELECTRICAL ENGINEER 12/19/02 DATE

12-6-04
PLANS APPROVAL DATE

REGISTERED PROFESSIONAL ENGINEER JENS ERLINGSSON No. 8249 Exp. 9/30/06 ELECTRICAL STATE OF CALIFORNIA

PB POWER, Inc.
A Parsons Brinckerhoff Company
303 Second St., Suite 700N
San Francisco, CA 94107-1317

The State of California or its officers or agents shall not be responsible for the accuracy or completeness of electronic copies of this plan sheet.

Caltrans now has a web site! To get to the web site, go to http://www.dot.ca.gov

SHEET NOTES:

1. The Contractor shall extend and coil 5 meters of cable in manhole 27. All cables shall be tagged with circuit numbers as shown.
2. For seismic sensor cables see YBI Transition Structures.

NOTES:

1. For other related work not shown on this drawing, see Electrical Special Provisions.
2. References:
   - For general notes of the strong motion detection system, see sheet E-361.
   - For circuit and conduit/cable tray schedules, see sheets starting at E-401.
3. All conduits and fittings located outside or inside pier shall be rigid galvanized steel, PVC coated.
4. Secure enclosure to concrete with manufacturer's recommended mounting and approved by the Engineer.

REGISTERED PROFESSIONAL ENGINEER FADI WALIEDDINE No. 11465 Exp. 12/31/2009 ELECTRICAL STATE OF CALIFORNIA

FOR REVISION ONLY

REQUEST FOR INFORMATION NOT ADDRESSED IN THIS CCO REMAIN IN FORCE

MARK	DATE	DESCRIPTIONS	BY	CH'D	CCO#
1	10/03/08	STRONG MOTION SYSTEM	RG	FW	74

REVISIONS

CONTRACT CHANGE ORDER NO. 74
SHEET 23 OF 27

DETAILS
STRONG MOTION DETECTION SYSTEM
CABLE BLOCK DIAGRAM

NO SCALE

E-382

DATE	REVISED BY	DATE	REVISED BY
02/02	JW	05/02	JW

CALCULATED/DESIGNED BY JW
CHECKED BY JW

DESIGN OVERSIGHT
BEHZAD GOLEMOHAMMADI

STATE OF CALIFORNIA - DEPARTMENT OF TRANSPORTATION
Caltrans

THIS PLAN IS ACCURATE FOR ELECTRICAL WORK ONLY.

ALL DIMENSIONS ARE IN MILLIMETERS UNLESS OTHERWISE SHOWN.

FOR REDUCED PLANS ORIGINAL SCALE IS IN MILLIMETERS 0 20 40 60 80

DGN FILE =>T:\13103\MS\pse\SAS Struc\CCO\SAS CCO74\Issued for Submittal 2008-10-03\04-0120f1_0348R01.dgn
USERNAME =>llorico
CU 04251
EA 0120F1

DATE PLOTTED => 10/2/2008
TIME PLOTTED => 6:08:12 PM

LAST REVISION 00-00-00

DIST	COUNTY	ROUTE	KILOMETER POST TOTAL PROJECT	SHEET No	TOTAL SHEETS
04	SF	80	13.2/13.9	349 R1	1204

REGISTERED ELECTRICAL ENGINEER 12/19/02 DATE

12-6-04
PLANS APPROVAL DATE

REGISTERED PROFESSIONAL ENGINEER JENS ERLINGSSON No. 8249 Exp. 9/30/06 ELECTRICAL STATE OF CALIFORNIA

PB POWER, Inc.
A Parsons Brinckerhoff Company
303 Second St., Suite 700N
San Francisco, CA 94107-1317

The State of California or its officers or agents shall not be responsible for the accuracy or completeness of electronic copies of this plan sheet.

Caltrans now has a web site! To get to the web site, go to http://www.dot.ca.gov

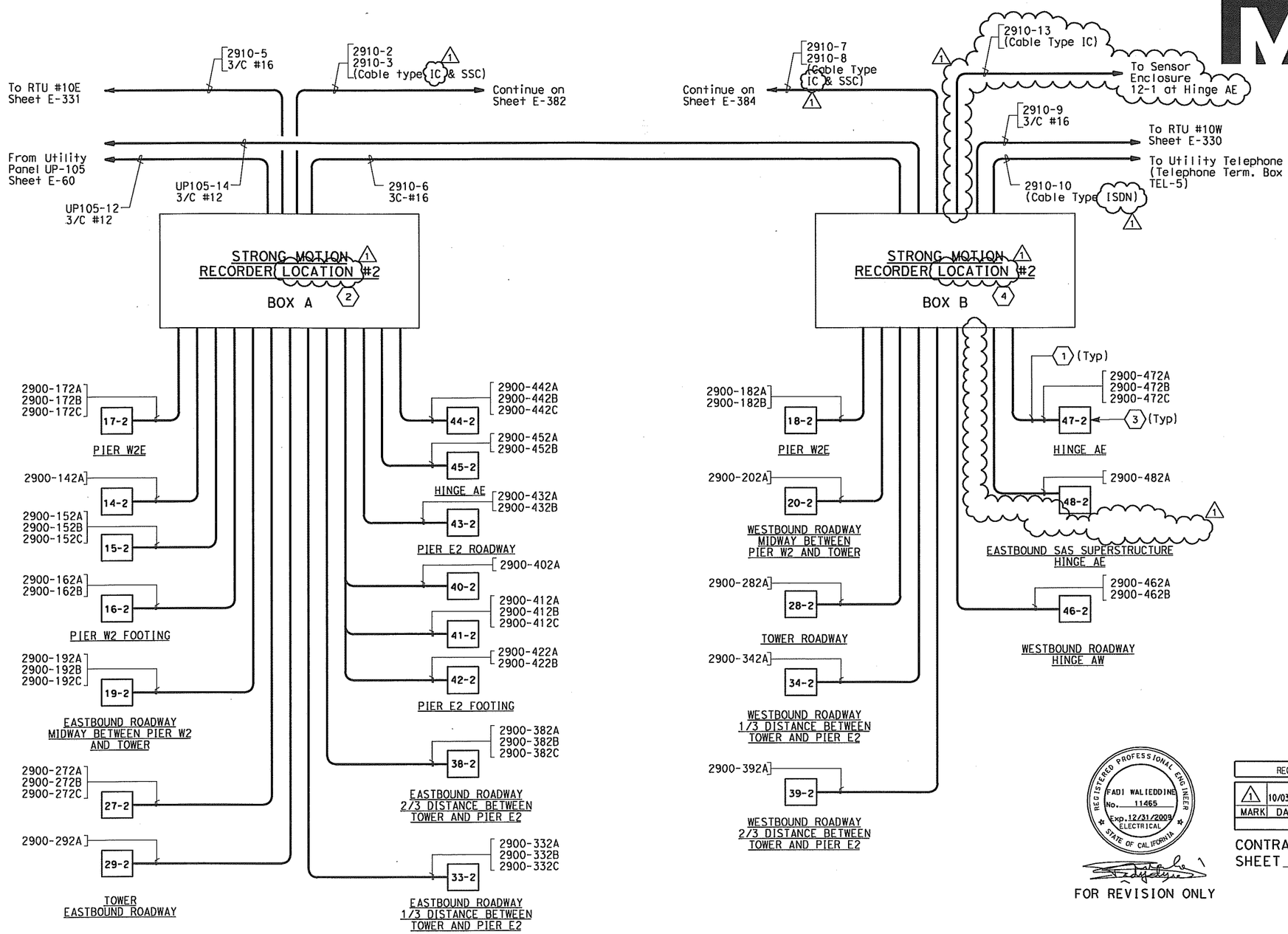

SHEET NOTES:

1. Strong Motion sensor cable Type SSC, unless otherwise indicated.
2. Strong Motion Recorder #2 Box A consists of two 18-channel recorders and one 12-channel recorder, connected to a total of 35 sensors.
3. Sensor enclosure with identification number as shown.
4. Strong Motion Recorder #2 Box B consist of one 18-channel recoder connected to a total of 12 sensors.

NOTES:

1. For other related work not shown on this drawing, see Electrical Special Provisions.
2. References:
   - For general notes of the strong motion detection system, see sheet E-361.
   - For circuit and conduit/cable tray schedules, see sheets starting at E-401.
3. All conduits and fittings located outside or inside pier shall be galvanized rigid steel, PVC coated.
4. Secure enclosure to concrete with manufacturer's recommended mounting and approved by the Engineer.
5. Strong motion recorder #2 box A and box B located on service platform 5, see sheet E-72.

REGISTERED PROFESSIONAL ENGINEER FADI WALIEDDINE No. 11465 Exp. 12/31/2009 ELECTRICAL STATE OF CALIFORNIA

FOR REVISION ONLY

REQUEST FOR INFORMATION NOT ADDRESSED IN THIS CCO REMAIN IN FORCE

MARK	DATE	DESCRIPTIONS	BY	CH'D	CCO#
1	10/03/08	STRONG MOTION SYSTEM	RG	FW	74
		REVISIONS			

CONTRACT CHANGE ORDER NO. 74
SHEET 24 OF 27

DETAILS
STRONG MOTION DETECTION SYSTEM CABLE BLOCK DIAGRAM
NO SCALE

E-383

THIS PLAN IS ACCURATE FOR ELECTRICAL WORK ONLY.

STATE OF CALIFORNIA - DEPARTMENT OF TRANSPORTATION
Caltrans

DESIGN OVERSIGHT: BEHZAD GOLEMOHAMMADI

CALCULATED/DESIGNED BY	JW	DATE 02/02	REVISED BY	DATE REVISED
CHECKED BY	-	-		

LAST REVISION 00-00-00
DATE PLOTTED => 10/2/2008
TIME PLOTTED => 6:08:36 PM

FOR REDUCED PLANS ORIGINAL SCALE IS IN MILLIMETERS 0 20 40 60 80

DGN FILE =>T:\13103\MS\pse\SAS Struc\CCO\SAS CC074\Issued for Submittal 2008-10-03\04-0120F1_0349R01.dgn
USERNAME =>llorico
CU 04251
EA 0120F1

DIST	COUNTY	ROUTE	KILOMETER POST TOTAL PROJECT	SHEET No	TOTAL SHEETS
04	SF	80	13.2/13.9	350 R1	1204

Jens Erlingsson 12/19/02
REGISTERED ELECTRICAL ENGINEER DATE

12-6-04
PLANS APPROVAL DATE

REGISTERED PROFESSIONAL ENGINEER JENS ERLINGSSON No. 8249 Exp. 9/30/06 ELECTRICAL STATE OF CALIFORNIA

PB POWER, Inc.
A Parsons Brinckerhoff Company
303 Second St., Suite 700N
San Francisco, CA 94107-1317

The State of California or its officers or agents shall not be responsible for the accuracy or completeness of electronic copies of this plan sheet.

Caltrans now has a web site! To get to the web site, go to http://www.dot.ca.gov

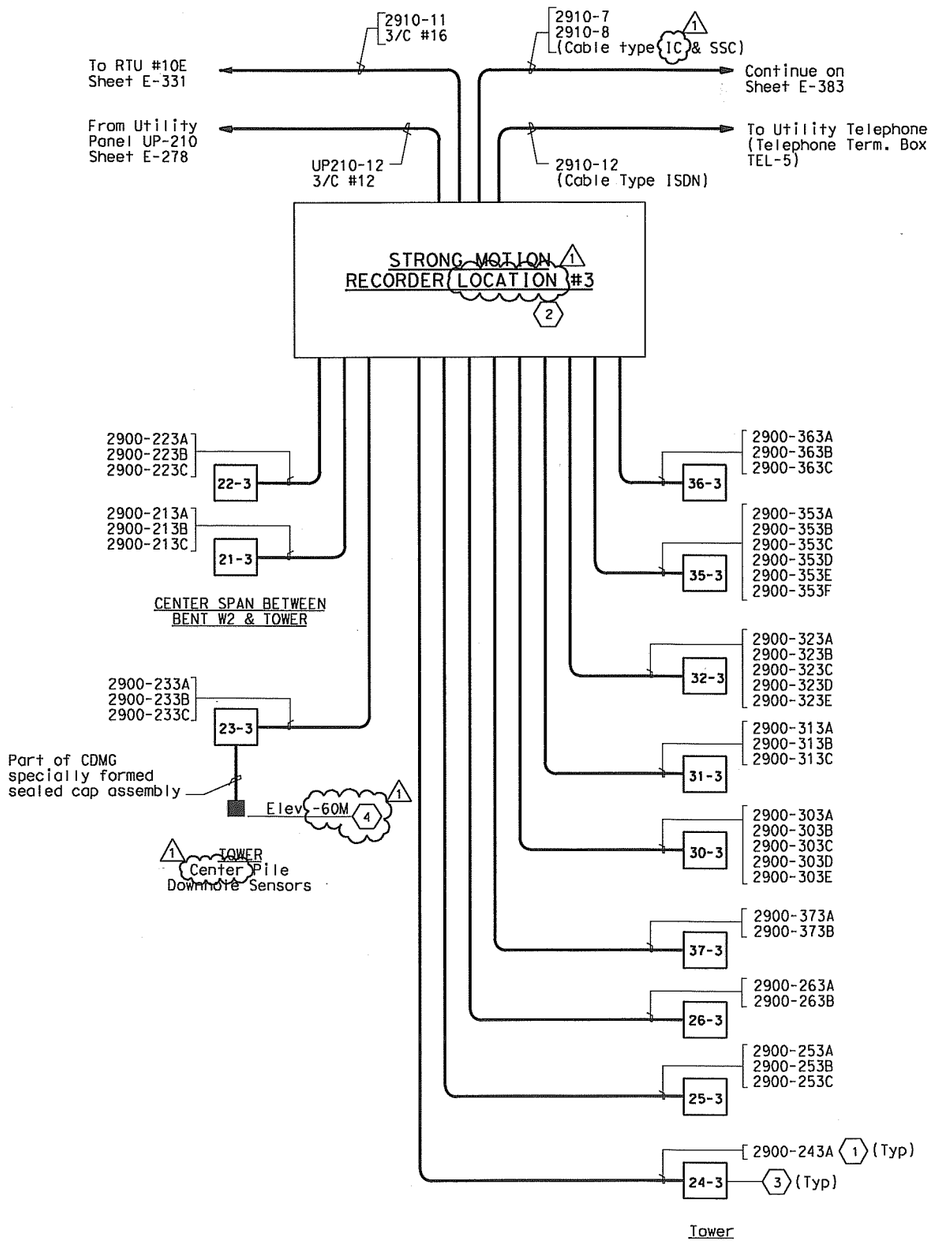

SHEET NOTES:

1. Strong Motion sensor cable Type SSC, unless otherwise indicated.
2. Strong Motion Recorder #3 consists of one 18-channel recorder and two 12-channel recorders, connected to a total of 39 sensors.
3. Sensor enclosure with identification number as shown.
4. Sensor enclosure 23-3 at tower elevation 3M. Sensor orientation assembly at minus 60M. Installation of downhole sensor package and associated cabling by others.

NOTES:

1. For other related work not shown on this drawing, see Electrical Special Provisions.
2. References:
   - For general notes of the strong motion detection system, see sheet E-361.
   - For circuit and conduit/cable tray schedules, see sheets starting at E-401.
3. All conduits and fittings located outside or inside pier shall be galvanized rigid steel, PVC coated.
4. Secure enclosure to concrete with manufacturer's recommended mounting and approved by the Engineer.
5. Strong motion recorder #3 located at tower, see sheet E-366.

REGISTERED PROFESSIONAL ENGINEER FADI WALIEDDINE No. 11465 Exp. 12/31/2009 ELECTRICAL STATE OF CALIFORNIA

FOR REVISION ONLY

REQUEST FOR INFORMATION NOT ADDRESSED IN THIS CCO REMAIN IN FORCE

MARK	DATE	DESCRIPTIONS	BY	CH'D	CCO#
1	10/03/08	STRONG MOTION SYSTEM	RG	FW	74

REVISIONS

CONTRACT CHANGE ORDER NO. 74
SHEET 25 OF 27

DETAILS
STRONG MOTION DETECTION SYSTEM CABLE BLOCK DIAGRAM
NO SCALE

E-384

THIS PLAN IS ACCURATE FOR ELECTRICAL WORK ONLY.

ALL DIMENSIONS ARE IN MILLIMETERS UNLESS OTHERWISE SHOWN.

FOR REDUCED PLANS ORIGINAL SCALE IS IN MILLIMETERS 0 20 40 60 80

DGN FILE =>T:\13103\MS\pse\SAS Struc\CCO\SAS CCO74\Issued for Submittal 2008-10-03\04-0120F1_0350R01.dgn
USERNAME =>llorico
CU 04251
EA 0120F1

DATE PLOTTED => 10/2/2008
TIME PLOTTED => 6:08:51 PM
LAST REVISION 00-00-00

STATE OF CALIFORNIA - DEPARTMENT OF TRANSPORTATION
Caltrans

DESIGN OVERSIGHT
BEHZAD GOLEMOHAMMADI

CALCULATED/DESIGNED BY JW DATE 02/02 REVISED BY
CHECKED BY - DATE REVISED

DIST	COUNTY	ROUTE	KILOMETER POST TOTAL PROJECT	SHEET No	TOTAL SHEETS
04	SF	80	13.2/13.9	402 R1	1204

Jens Erlingsson 12/19/02
REGISTERED ELECTRICAL ENGINEER DATE

12-6-04
PLANS APPROVAL DATE

REGISTERED PROFESSIONAL ENGINEER JENS ERLINGSSON No. 8249 Exp. 9/30/06 ELECTRICAL STATE OF CALIFORNIA

PB POWER, Inc.
A Parsons Brinckerhoff Company
303 Second St., Suite 700N
San Francisco, CA 94107-1317

The State of California or its officers or agents shall not be responsible for the accuracy or completeness of electronic copies of this plan sheet.

Caltrans now has a web site! To get to the web site, go to http://www.dot.ca.gov

Caltrans Metric

REGISTERED PROFESSIONAL ENGINEER FADI WALIEDDINE No. 11465 Exp. 12/31/2009 ELECTRICAL STATE OF CALIFORNIA

REQUEST FOR INFORMATION NOT ADDRESSED IN THIS CCO REMAIN IN FORCE

MARK	DATE	DESCRIPTIONS	BY	CH'D	CCO#
1	10/03/08	STRONG MOTION SYSTEM	RG	FW	74

REVISIONS

CONTRACT CHANGE ORDER NO. 74
FOR REVISION ONLY SHEET 26 OF 27

CONDUIT DATA

Conduit No	Reference	Size	Type	Total Fill (mm²)	Allowable Fill (mm²)	Included Cable No.	Conductor Type
9022	E-372	27	RGS conduit	94.84	229.03	2900-432A	4 pair #22, shielded pairs, FEP insulation
						Pull rope	Soft-Fiber Polyester
						2900-432B	4 pair #22, shielded pairs, FEP insulation
9023	E-373	27	RGS conduit	142.26	229.03	Pull rope	Soft-Fiber Polyester
						2900-472C	4 pair #22, shielded pairs, FEP insulation
						2900-472B	4 pair #22, shielded pairs, FEP insulation
						2900-472A	4 pair #22, shielded pairs, FEP insulation
9024	E-373	27	RGS conduit	94.84	229.03	Pull rope	Soft-Fiber Polyester
						2900-462B	4 pair #22, shielded pairs, FEP insulation
						2900-462A	4 pair #22, shielded pairs, FEP insulation
9025	E-373	27	RGS conduit	94.84	229.03	Pull rope	Soft-Fiber Polyester
						2900-452B	4 pair #22, shielded pairs, FEP insulation
						2900-452A	4 pair #22, shielded pairs, FEP insulation
9026	E-373	27	RGS conduit	142.26	229.03	Pull rope	Soft-Fiber Polyester
						2900-442B	4 pair #22, shielded pairs, FEP insulation
						2900-442A	4 pair #22, shielded pairs, FEP insulation
						2900-442C	4 pair #22, shielded pairs, FEP insulation
9027	E-362	41	RGS-PVC coated conduit	284.52	534.55	2900-162B	4 pair #22, shielded pairs, FEP insulation
						2900-152C	4 pair #22, shielded pairs, FEP insulation
						2900-152B	4 pair #22, shielded pairs, FEP insulation
						2900-152A	4 pair #22, shielded pairs, FEP insulation
						2900-162A	4 pair #22, shielded pairs, FEP insulation
						2900-142A	4 pair #22, shielded pairs, FEP insulation
						Pull rope	Soft-Fiber Polyester
9050	1 E-366A	27	RGS-PVC coated conduit	47.42	229.03	2900-243A	4 pair #22, shielded pairs, FEP insulation
						Pull rope	Soft-Fiber Polyester
9051	1 E-366A	27	RGS-PVC coated conduit	189.68	229.03	2900-253A	4 pair #22, shielded pairs, FEP insulation
						2900-253B	4 pair #22, shielded pairs, FEP insulation
						2900-243A	4 pair #22, shielded pairs, FEP insulation
						Pull rope	Soft-Fiber Polyester
						2900-253C	4 pair #22, shielded pairs, FEP insulation
9052	1 E-366A	27	RGS-PVC coated conduit	94.84	229.03	2900-263A	4 pair #22, shielded pairs, FEP insulation
						2900-263B	4 pair #22, shielded pairs, FEP insulation
						Pull rope	Soft-Fiber Polyester
9053	1 E-366A	27	RGS-PVC coated conduit	142.26	229.03	2900-253A	4 pair #22, shielded pairs, FEP insulation
						Pull rope	Soft-Fiber Polyester
						2900-253C	4 pair #22, shielded pairs, FEP insulation
						2900-253B	4 pair #22, shielded pairs, FEP insulation
9054	1 E-366A	41	RGS-PVC coated conduit	237.10	534.55	2900-233A	4 pair #22, shielded pairs, FEP insulation
				1	1	2900-233C	4 pair #22, shielded pairs, FEP insulation
						2900-313A	4 pair #22, shielded pairs, FEP insulation
						Pull rope	Soft-Fiber Polyester
						2900-313B	4 pair #22, shielded pairs, FEP insulation
					1	2900-233B	4 pair #22, shielded pairs, FEP insulation
9055	E-366	41	RGS-PVC coated conduit	237.10	534.55	2900-303C	4 pair #22, shielded pairs, FEP insulation
						Pull rope	Soft-Fiber Polyester
						2900-303D	4 pair #22, shielded pairs, FEP insulation
						2900-303B	4 pair #22, shielded pairs, FEP insulation
						2900-303A	4 pair #22, shielded pairs, FEP insulation
						2900-303E	4 pair #22, shielded pairs, FEP insulation
9056	E-366	27	RGS-PVC coated conduit	49.21	229.03	Pull rope	Soft-Fiber Polyester
						UP210-12	2 + 1 gnd #12, #12, 600 V, RHH/RHW insulation
9057	E-264A, E-366	41	RGS-PVC coated conduit	320.61	534.55	2910-7	4 pair #24, overall shielded, 300 V, PE insulation
						2910-8	4 pair #22, shielded pairs, 300 V, PE insulation
						2910-12	4 pair #22, shielded pairs, 300 V, PE insulation
9058	E-366	27	RGS-PVC coated conduit	0.00	229.03	Pull rope	Soft-Fiber Polyester
9059	E-366	78	RGS-PVC coated conduit	1849.38	1935.24	2900-303C	4 pair #22, shielded pairs, FEP insulation
						2900-313C	4 pair #22, shielded pairs, FEP insulation
						2900-323C	4 pair #22, shielded pairs, FEP insulation
						2900-323D	4 pair #22, shielded pairs, FEP insulation

CONDUIT DATA

Conduit No	Reference	Size	Type	Total Fill (mm²)	Allowable Fill (mm²)	Included Cable No.	Conductor Type
9059	E-366	78	RGS-PVC coated conduit	1849.38	1935.24	2900-323A	4 pair #22, shielded pairs, FEP insulation
(con't)						2900-323E	4 pair #22, shielded pairs, FEP insulation
						2900-323B	4 pair #22, shielded pairs, FEP insulation
						2900-313B	4 pair #22, shielded pairs, FEP insulation
						2900-313A	4 pair #22, shielded pairs, FEP insulation
						2900-303D	4 pair #22, shielded pairs, FEP insulation
						2900-373A	4 pair #22, shielded pairs, FEP insulation
						2900-303B	4 pair #22, shielded pairs, FEP insulation
						2900-303A	4 pair #22, shielded pairs, FEP insulation
						2900-263B	4 pair #22, shielded pairs, FEP insulation
						2900-303E	4 pair #22, shielded pairs, FEP insulation
						2900-353A	4 pair #22, shielded pairs, FEP insulation
						Pull rope	Soft-Fiber Polyester
						2900-363C	4 pair #22, shielded pairs, FEP insulation
						2900-363B	4 pair #22, shielded pairs, FEP insulation
						2900-363A	4 pair #22, shielded pairs, FEP insulation
						2900-353F	4 pair #22, shielded pairs, FEP insulation
						2900-353E	4 pair #22, shielded pairs, FEP insulation
						2900-223C	4 pair #22, shielded pairs, FEP insulation
						2900-353B	4 pair #22, shielded pairs, FEP insulation
						2900-373B	4 pair #22, shielded pairs, FEP insulation
						2900-263A	4 pair #22, shielded pairs, FEP insulation
						2900-223B	4 pair #22, shielded pairs, FEP insulation
						2900-223A	4 pair #22, shielded pairs, FEP insulation
						2900-213C	4 pair #22, shielded pairs, FEP insulation
						2900-213B	4 pair #22, shielded pairs, FEP insulation
						2900-213A	4 pair #22, shielded pairs, FEP insulation
						2900-353C	4 pair #22, shielded pairs, FEP insulation
						2900-253C	4 pair #22, shielded pairs, FEP insulation
						2900-253B	4 pair #22, shielded pairs, FEP insulation
						2900-253A	4 pair #22, shielded pairs, FEP insulation
						2900-243A	4 pair #22, shielded pairs, FEP insulation
						2900-233A	4 pair #22, shielded pairs, FEP insulation
						2900-233C	4 pair #22, shielded pairs, FEP insulation
						2900-233B	4 pair #22, shielded pairs, FEP insulation
						2900-353D	4 pair #22, shielded pairs, FEP insulation
9060	E-366, E-367	78	RGS-PVC coated conduit	1090.66	1935.24	2900-213C	4 pair #22, shielded pairs, FEP insulation
						2900-213B	4 pair #22, shielded pairs, FEP insulation
						2900-213A	4 pair #22, shielded pairs, FEP insulation
						2900-323E	4 pair #22, shielded pairs, FEP insulation
						2900-323D	4 pair #22, shielded pairs, FEP insulation
						2900-323C	4 pair #22, shielded pairs, FEP insulation
						2900-323B	4 pair #22, shielded pairs, FEP insulation
						2900-223A	4 pair #22, shielded pairs, FEP insulation
						2900-313B	4 pair #22, shielded pairs, FEP insulation
						2900-313C	4 pair #22, shielded pairs, FEP insulation
					1	2900-243C	4 pair #22, shielded pairs, FEP insulation
						2900-253A	4 pair #22, shielded pairs, FEP insulation
						2900-253B	4 pair #22, shielded pairs, FEP insulation
						2900-253C	4 pair #22, shielded pairs, FEP insulation
						2900-263A	4 pair #22, shielded pairs, FEP insulation
						2900-263B	4 pair #22, shielded pairs, FEP insulation
						2900-233A	4 pair #22, shielded pairs, FEP insulation
						2900-233B	4 pair #22, shielded pairs, FEP insulation
						2900-233C	4 pair #22, shielded pairs, FEP insulation
						2900-273A	4 pair #22, shielded pairs, FEP insulation
						2900-273B	4 pair #22, shielded pairs, FEP insulation

For continuation, see next sheet.

CONDUIT AND TRAY SCHEDULE

E-447

DATE	REVISED BY	DATE REVISED
8/02	AB	8/02

CALCULATED/DESIGNED BY PBP
CHECKED BY

DESIGN OVERSIGHT
BEHZAD GOLEMOHAMMADI

STATE OF CALIFORNIA - DEPARTMENT OF TRANSPORTATION
Caltrans

DATE PLOTTED => 10/2/2008
TIME PLOTTED => 6:09:20 PM
LAST REVISION 00-00-00

FOR REDUCED PLANS ORIGINAL SCALE IS IN MILLIMETERS 0 20 40 60 80

DGN FILE =>T:\13103\MS\pse\SAS Struc\CCO\SAS CCO74\Issued for Submittal 2008-10-03\04-0120f1_0402R01.dgn
USERNAME =>llorico

CU 04251 EA 0120F1

DIST	COUNTY	ROUTE	KILOMETER POST TOTAL PROJECT	SHEET No	TOTAL SHEETS
04	SF	80	13.2/13.9	403 R1	1204

REGISTERED ELECTRICAL ENGINEER 12/19/02 DATE

12-6-04
PLANS APPROVAL DATE

REGISTERED PROFESSIONAL ENGINEER JENS ERLINGSSON No. 8249 Exp. 9/30/06 ELECTRICAL STATE OF CALIFORNIA

PB POWER, Inc.
A Parsons Brinckerhoff Company
303 Second St., Suite 700N
San Francisco, CA 94107-1317

The State of California or its officers or agents shall not be responsible for the accuracy or completeness of electronic copies of this plan sheet.

Caltrans now has a web site! To get to the web site, go to http://www.dot.ca.gov

Caltrans Metric

REGISTERED PROFESSIONAL ENGINEER FADI WALIEDDINE No. 11465 Exp. 12/31/2009 ELECTRICAL STATE OF CALIFORNIA

REQUEST FOR INFORMATION NOT ADDRESSED IN THIS CCO REMAIN IN FORCE

MARK	DATE	DESCRIPTIONS	BY	CH'D	CCO#
1	10/03/08	STRONG MOTION SYSTEM	RG	FW	74

REVISIONS

CONTRACT CHANGE ORDER NO. 74
FOR REVISION ONLY SHEET 27 OF 27

CONDUIT DATA

Conduit No	Reference	Size	Type	Total Fill (mm²)	Allowable Fill (mm²)	Included Cable No.	Conductor Type
9060	E-366, E-367	78	RGS-PVC coated conduit	1090.66	1935.24	2900-323A	4 pair #22, shielded pairs, FEP insulation
(con't)						2900-363A	4 pair #22, shielded pairs, FEP insulation
						2900-363C	4 pair #22, shielded pairs, FEP insulation
						2900-313A	4 pair #22, shielded pairs, FEP insulation
						Pull rope	Soft-Fiber Polyester
						2900-223B	4 pair #22, shielded pairs, FEP insulation
						2900-363B	4 pair #22, shielded pairs, FEP insulation
						2900-353F	4 pair #22, shielded pairs, FEP insulation
						2900-353E	4 pair #22, shielded pairs, FEP insulation
						2900-353D	4 pair #22, shielded pairs, FEP insulation
						2900-353C	4 pair #22, shielded pairs, FEP insulation
						2900-353B	4 pair #22, shielded pairs, FEP insulation
						2900-353A	4 pair #22, shielded pairs, FEP insulation
						2900-223C	4 pair #22, shielded pairs, FEP insulation
9061	E-367	27	RGS-PVC coated conduit	142.26	229.03	2900-313C	4 pair #22, shielded pairs, FEP insulation
						Pull rope	Soft-Fiber Polyester
						2900-313B	4 pair #22, shielded pairs, FEP insulation
						2900-313A	4 pair #22, shielded pairs, FEP insulation
9062	E-365, E-367	78	RGS-PVC coated conduit	948.40	1935.24	Pull rope	Soft-Fiber Polyester
						2900-353B	4 pair #22, shielded pairs, FEP insulation
						2900-353C	4 pair #22, shielded pairs, FEP insulation
						2900-353D	4 pair #22, shielded pairs, FEP insulation
						2900-353F	4 pair #22, shielded pairs, FEP insulation
						2900-213B	4 pair #22, shielded pairs, FEP insulation
						2900-363C	4 pair #22, shielded pairs, FEP insulation
						2900-363B	4 pair #22, shielded pairs, FEP insulation
						2900-353E	4 pair #22, shielded pairs, FEP insulation
						2900-353A	4 pair #22, shielded pairs, FEP insulation
						2900-223C	4 pair #22, shielded pairs, FEP insulation
						2900-223B	4 pair #22, shielded pairs, FEP insulation
						2900-213C	4 pair #22, shielded pairs, FEP insulation
						2900-213A	4 pair #22, shielded pairs, FEP insulation
						2900-323E	4 pair #22, shielded pairs, FEP insulation
						2900-323D	4 pair #22, shielded pairs, FEP insulation
						2900-323C	4 pair #22, shielded pairs, FEP insulation
						2900-323B	4 pair #22, shielded pairs, FEP insulation
						2900-323A	4 pair #22, shielded pairs, FEP insulation
						2900-363A	4 pair #22, shielded pairs, FEP insulation
						2900-223A	4 pair #22, shielded pairs, FEP insulation
9064	E-367	41	RGS-PVC coated conduit	237.10	534.55	2900-323C	4 pair #22, shielded pairs, FEP insulation
						2900-323D	4 pair #22, shielded pairs, FEP insulation
						2900-323A	4 pair #22, shielded pairs, FEP insulation
						2900-323B	4 pair #22, shielded pairs, FEP insulation
						Pull rope	Soft-Fiber Polyester
						2900-323E	4 pair #22, shielded pairs, FEP insulation
9065	E-264A, E-366	27	RGS-PVC coated conduit	47.42	229.03	Pull rope	Soft-Fiber Polyester
						2900-292A	4 pair #22, shielded pairs, FEP insulation
9067	E-366A	27	RGS-PVC coated conduit	94.84	229.03	2900-373B	4 pair #22, shielded pairs, FEP insulation
						2900-373A	4 pair #22, shielded pairs, FEP insulation
						Pull rope	Soft-Fiber Polyester
9070	E-366A	27	RGS-PVC coated conduit	142.26	229.03	2900-233A	4 pair #22, shielded pairs, FEP insulation
						2900-233B	4 pair #22, shielded pairs, FEP insulation
						2900-233C	4 pair #22, shielded pairs, FEP insulation

CONDUIT DATA

Conduit No	Reference	Size	Type	Total Fill (mm²)	Allowable Fill (mm²)	Included Cable No.	Conductor Type
9068	E-366A	41	RGS-PVC coated conduit	284.52	534.55		
						2900-263B	4 pair #22, shielded pairs, FEP insulation
						2900-263A	4 pair #22, shielded pairs, FEP insulation
						2900-253C	4 pair #22, shielded pairs, FEP insulation
						2900-253B	4 pair #22, shielded pairs, FEP insulation
						2900-253A	4 pair #22, shielded pairs, FEP insulation
						2900-243A	4 pair #22, shielded pairs, FEP insulation
						Pull rope	Soft-Fiber Polyester
9069	E-374	27	RGS conduit	47.42	229.03	Pull rope	Soft-Fiber Polyester
						2900-482A	4 pair #22, shielded pairs, FEP insulation
9222	E-72	53	RGS conduit	62.07	879.42	2910-5	1-3/C #16, 600 V, EPR insulation
						Pull rope	Soft-Fiber Polyester
9223	E-72	53	RGS conduit	62.07	879.42	Pull rope	Soft-Fiber Polyester
						2910-9	1-3/C #16, 600 V, EPR insulation
9230	E-115	78	RGS conduit	1754.54	2564.19	2900-442B	4 pair #22, shielded pairs, FEP insulation
						2900-402A	4 pair #22, shielded pairs, FEP insulation
						2900-412A	4 pair #22, shielded pairs, FEP insulation
						2900-412B	4 pair #22, shielded pairs, FEP insulation
						2900-412C	4 pair #22, shielded pairs, FEP insulation
						2900-422A	4 pair #22, shielded pairs, FEP insulation
						2900-422B	4 pair #22, shielded pairs, FEP insulation
						2900-442A	4 pair #22, shielded pairs, FEP insulation
						2900-332A	4 pair #22, shielded pairs, FEP insulation
						2900-442C	4 pair #22, shielded pairs, FEP insulation
						2900-452A	4 pair #22, shielded pairs, FEP insulation
						2900-452B	4 pair #22, shielded pairs, FEP insulation
						2900-482A	4 pair #22, shielded pairs, FEP insulation
						2910-2	4 pair #22, shielded pairs, FEP insulation
						2910-3	4 pair #22, shielded pairs, FEP insulation
						Pull rope	Soft-Fiber Polyester
						2900-382C	4 pair #22, shielded pairs, FEP insulation
						2900-432A	4 pair #22, shielded pairs, FEP insulation
						2900-172A	4 pair #22, shielded pairs, FEP insulation
						2900-152A	4 pair #22, shielded pairs, FEP insulation
						2900-332C	4 pair #22, shielded pairs, FEP insulation
						2900-142A	4 pair #22, shielded pairs, FEP insulation
						2900-382B	4 pair #22, shielded pairs, FEP insulation
						2900-152B	4 pair #22, shielded pairs, FEP insulation
						2900-152C	4 pair #22, shielded pairs, FEP insulation
						2900-162B	4 pair #22, shielded pairs, FEP insulation
						2900-172B	4 pair #22, shielded pairs, FEP insulation
						2900-172C	4 pair #22, shielded pairs, FEP insulation
						2900-272C	4 pair #22, shielded pairs, FEP insulation
						2900-382A	4 pair #22, shielded pairs, FEP insulation
						2900-162A	4 pair #22, shielded pairs, FEP insulation
						2900-292A	4 pair #22, shielded pairs, FEP insulation
						2900-192A	4 pair #22, shielded pairs, FEP insulation
						2900-272B	4 pair #22, shielded pairs, FEP insulation
						2900-272A	4 pair #22, shielded pairs, FEP insulation
						2900-192C	4 pair #22, shielded pairs, FEP insulation
						2900-192B	4 pair #22, shielded pairs, FEP insulation
						2900-332B	4 pair #22, shielded pairs, FEP insulation

For continuation, see next sheet.

CONDUIT AND TRAY SCHEDULE

E-448

REVISED BY	DATE REVISED

CALCULATED/ DESIGNED BY	DATE 8/02
PBP	8/02
CHECKED BY	
AB	

DESIGN OVERSIGHT
BEHZAD GOLEMOHAMMADI

STATE OF CALIFORNIA - DEPARTMENT OF TRANSPORTATION
Caltrans

LAST REVISION 00-00-00

DATE PLOTTED => 10/2/2008
TIME PLOTTED => 6:09:39 PM

FOR REDUCED PLANS ORIGINAL SCALE IS IN MILLIMETERS 0 20 40 60 80

DGN FILE =>T:\13103\MS\pse\SAS Struc\CCO\SAS CCO74\Issued for Submittal 2008-10-03\04-0120F1_0403R01.dgn
USERNAME =>llorico

CU 04251 | EA 0120F1