DIST	COUNTY	ROUTE	KILOMETER POST TOTAL PROJECT	SHEET NO.	TOTAL SHEETS
04	SF	80	13.2/13.9	213R2	1204

Caltrans Metric

REGISTERED ENGINEER-CIVIL

12-6-04
PLANS APPROVAL DATE

REGISTERED PROFESSIONAL ENGINEER T. W. SPARKS No. E16039 Exp. 9-30-11 ELECTRICAL STATE OF CALIFORNIA

The State of California or its officers or agents shall not be responsible for the accuracy or completeness of electronic copies of this plan sheet.

T.Y. LIN / MOFFATT & NICHOL
825 BATTERY STREET
SAN FRANCISCO, CA 94111

Caltrans now has a web site! To get to the web site, go to: http://www.dot.ca.gov

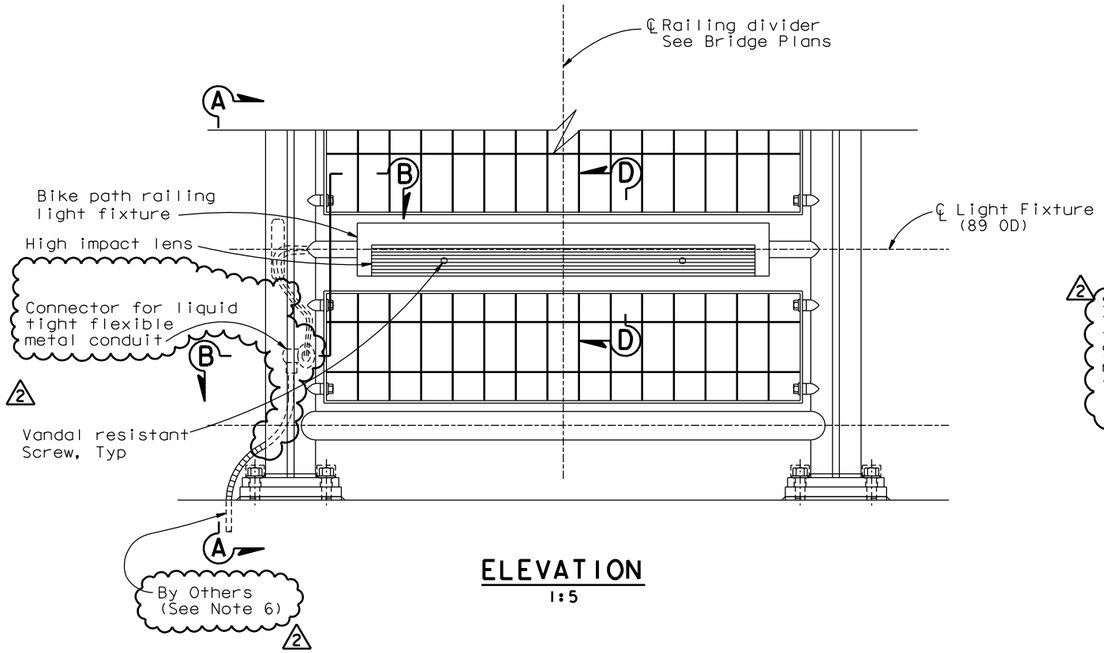

ELEVATION
1:5

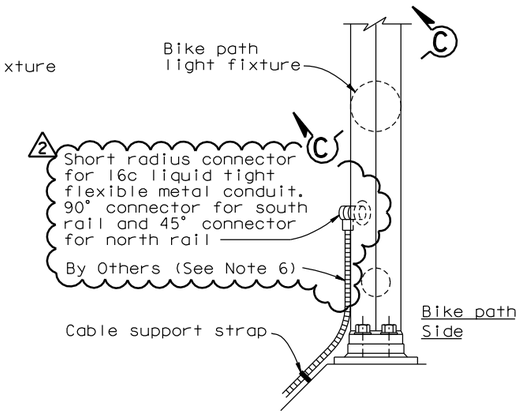

SECTION A-A
1:5

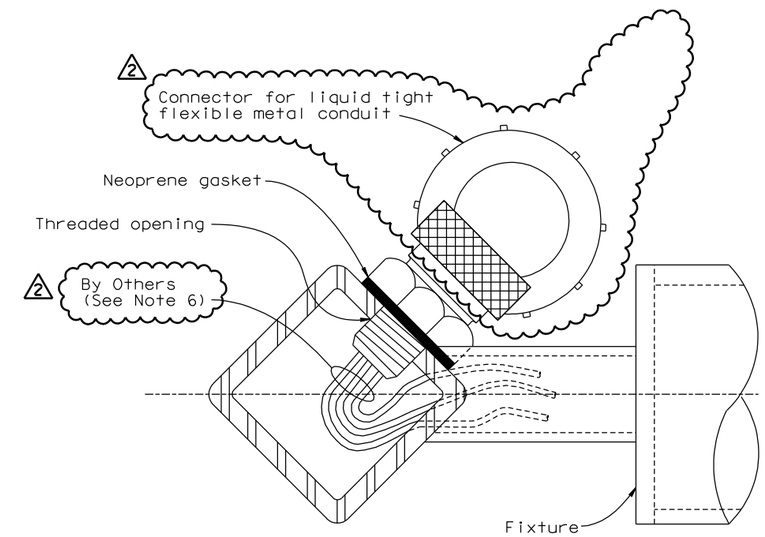

SECTION B-B
1:1

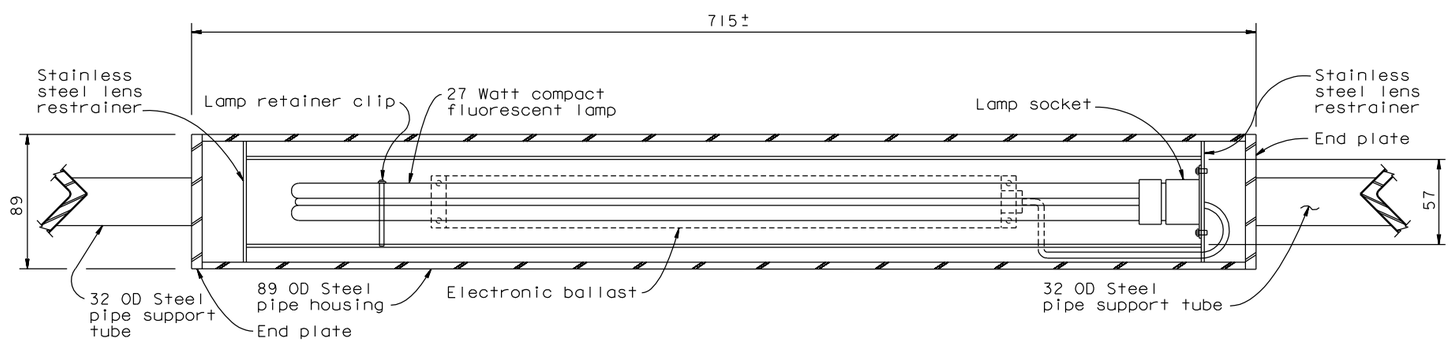

SECTION C-C
1:2

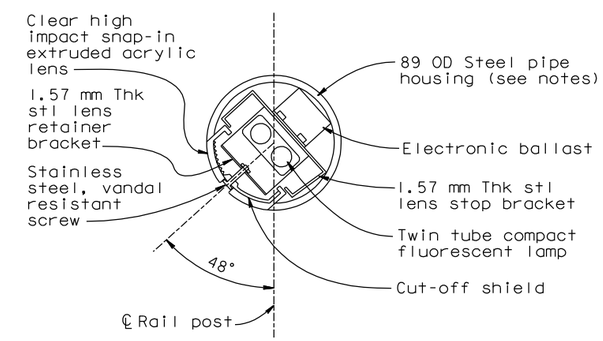

SECTION D-D
1:2

NOTES:

1. All metal (Except stainless steel) parts of railing light assembly shall be coated, see special provisions.
2. Refer to structural plans for railing details.
3. Light fixtures shall be parallel to top of bike path.
4. Light fixture support tube shall be welded to vertical posts.
5. All exposed welds shall be ground smooth.
6. For Details not shown, see "Typical Bikepath Plans and Sections" sheets in the Roadway Plans. (2)

CONTRACT CHANGE ORDER NO. ____
SHEET ___ OF ___

REQUESTS FOR INFORMATION NOT ADDRESSED IN THIS CCO REMAIN IN FORCE

MARK	DATE	DESCRIPTIONS	BY	CH'D	CCO#
2	05/07/10	BIKEPATH CONDUIT	TS	JB	73
1	08/28/09	BIKEPATH DETAILS	TS	JB	99

REVISIONS

DETAILS
SAS SUPERSTRUCTURE ROADWAY EASTBOUND
TYPICAL BIKE PATH LIGHTING

SCALE AS NOTED

ALL DIMENSIONS ARE IN MILLIMETERS UNLESS OTHERWISE SHOWN.

E-172

DATE	REVISED BY	DATE	REVISED
GAM	10/00	TYL	10/00

CALCULATED/DESIGNED BY
CHECKED BY

DESIGN OVERSIGHT
BOB ZANDIPOUR

SAS STRUCTURE
STATE OF CALIFORNIA - DEPARTMENT OF TRANSPORTATION
Caltrans

LAST REVISION 04-19-00
DATE PLOTTED => 06 MAY 2010
TIME PLOTTED => 09:08:00

FOR REDUCED PLANS ORIGINAL SCALE IN MILLIMETERS 0 20 40 60 80

FILE => I:\bb\04-012001\sas\contract plans and cco\cco\cco#73\2-revision 05-07-10\dgn\40120fua172.dgn
USERNAME => arivera

CU 0425I EA 0120FI

DIST.	COUNTY	ROUTE	KILOMETER POST TOTAL PROJECT	SHEET NO.	TOTAL SHEETS
04	SF	80	13.2/13.9	819R3	1204

REGISTERED ENGINEER - CIVIL

12-6-04
PLANS APPROVAL DATE

REGISTERED PROFESSIONAL ENGINEER Tien Hung Ho No. C 43990 Exp. 6/30/11 CIVIL STATE OF CALIFORNIA

The State of California or its officers or agents shall not be responsible for the accuracy or completeness of electronic copies of this plan sheet.

T.Y. LIN / MOFFATT & NICHOL
825 BATTERY STREET
SAN FRANCISCO, CA 94111

Caltrans now has a web site! To get to the web site, go to: http://www.dot.ca.gov

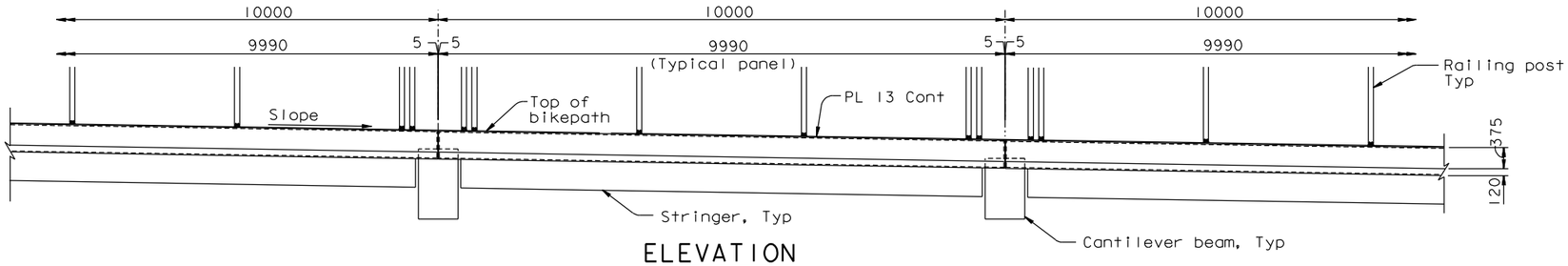

ELEVATION
1:50

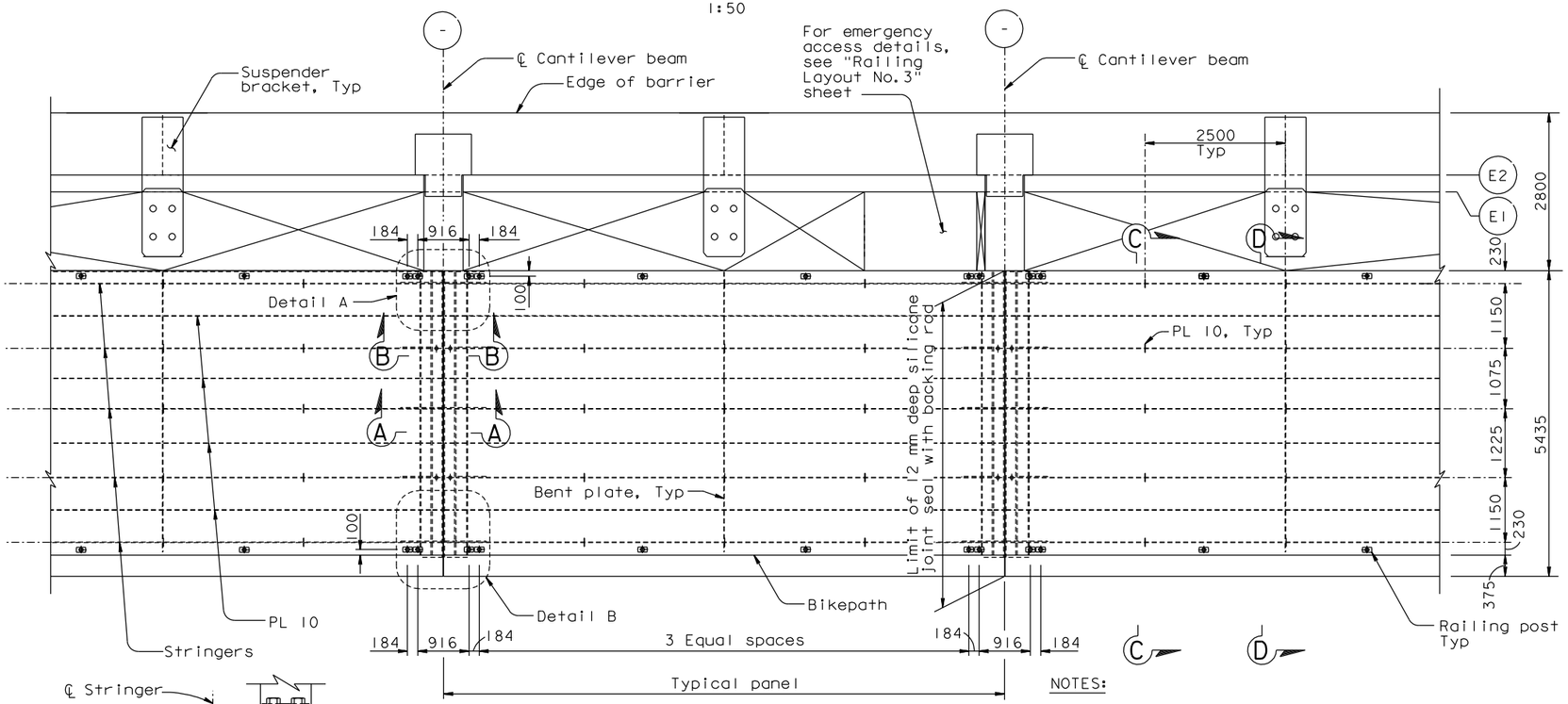

PLAN
1:50

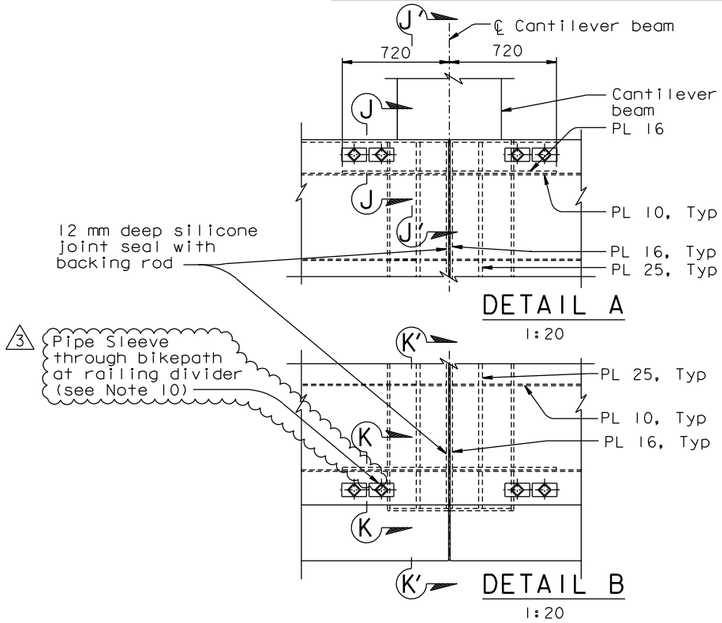

DETAIL A
1:20

DETAIL B
1:20

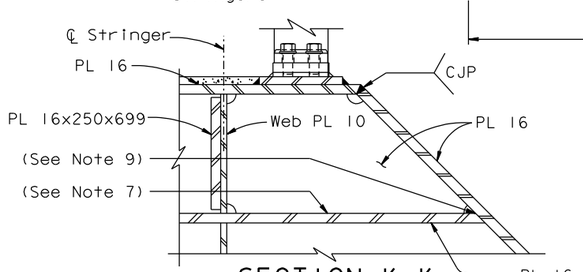

SECTION K-K
1:5
(SECTION K'-K' SIMILAR)

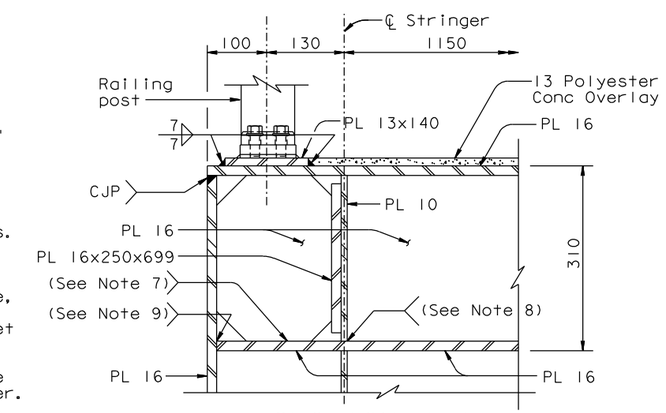

SECTION J-J
1:5
(SECTION J'-J' SIMILAR)

NOTES:

1. For cantilever beam details, see "Bikepath Details" sheets.
2. For Sections A-A and B-B, see "Bikepath Details" No.4" sheet.
3. For Sections C-C and D-D, see "Bikepath Details No.2" sheet.
4. For stringer details, see "Bikepath Details" sheets.
5. For railing layout, see "Railing Layout" sheets.
6. For emergency access location and details, see "Railing Layout" and "Railing Details" sheets.
7. At the Contractor's option, tight-fit is acceptable, subject to review and approval of the Engineer.
8. At the Contractor's option, 12mm single-sided fillet weld is acceptable, subject to review and approval of the Engineer.
9. At the Contractor's option, CJP with backing may be used, subject to review and approval of the Engineer.
10. For pipe sleeve through bikepath detail at railing divider locations (south side only), see "Bikepath Framing Details No.1A" sheet. (3)

LEGEND:

(-) Indicates Panel Point

CONTRACT CHANGE ORDER NO. ____
SHEET ___ OF ___

REQUESTS FOR INFORMATION NOT ADDRESSED IN THIS CCO REMAIN IN FORCE

ALL DIMENSIONS ARE IN MILLIMETERS UNLESS OTHERWISE SHOWN

MARK	DATE	DESCRIPTIONS	BY	CH'D	CCO#
3	04/01/11	BIKEPATH CONDUIT	RI	TH	73
2	08/20/10	BIKEPATH DETAILS	CC	TH	99
1	07/24/09	BIKEPATH DETAILS	CC	TH	99

REVISIONS

R. Valizadeh/V. Toan/Y.L./W.L./F.C.
DESIGN OVERSIGHT
SIGN OFF DATE 04/01/11

DESIGN	BY T. Ho	CHECKED T. McMeans	
DETAILS	BY R. Xu	CHECKED P. Ritchie	
QUANTITIES	BY C. Bernardo	CHECKED S. Shi	

PREPARED FOR THE STATE OF CALIFORNIA DEPARTMENT OF TRANSPORTATION

R. Manzanarez
PROJECT ENGINEER

BRIDGE NO. 34-0006L/R
KILOMETER POST 13.2/13.9

SAN FRANCISCO OAKLAND BAY BRIDGE
EAST SPAN SEISMIC SAFETY PROJECT
SELF-ANCHORED SUSPENSION BRIDGE
(SUPERSTRUCTURE & TOWER)

BIKEPATH FRAMING DETAILS NO.1

Rev. Date: 5-18-98

ORIGINAL SCALE IN MILLIMETERS FOR REDUCED PLANS 0 10 20 30 40 50 60 70 80 90 100

CU 04
EA 0120F1

DISREGARD PRINTS BEARING EARLIER REVISION DATES 05/31/01 04/08/02 07/04/02 12/19/02

SHEET 402R3 OF

FILE => I:\bb\04-012001\sas\contract plans and cco\cco\cco#73\6-revision 04-01-11\dgn\agbwf01.dgn

USERNAME => DWinrow DATE PLOTTED => 01 APR 2011 TIME PLOTTED => 13:51:36

100 % PS&E

DIST.	COUNTY	ROUTE	KILOMETER POST TOTAL PROJECT	SHEET NO.	TOTAL SHEETS
04	SF	80	13.2/13.9	819S1	1204

Caltrans Metric

REGISTERED ENGINEER - CIVIL

04-01-11
PLANS APPROVAL DATE

REGISTERED PROFESSIONAL ENGINEER Tien Hung Ho No. C 43990 Exp. 06/30/11 CIVIL STATE OF CALIFORNIA

The State of California or its officers or agents shall not be responsible for the accuracy or completeness of electronic copies of this plan sheet.

T.Y. LIN / MOFFATT & NICHOL
825 BATTERY STREET
SAN FRANCISCO, CA 94111

Caltrans now has a web site! To get to the web site, go to: http://www.dot.ca.gov

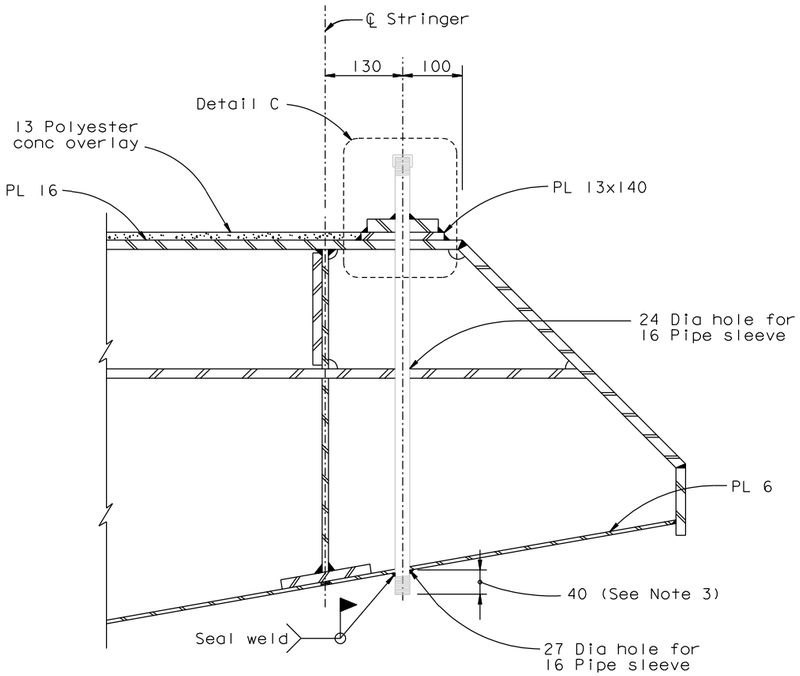

PIPE SLEEVE THROUGH BIKEPATH DETAIL

1:5

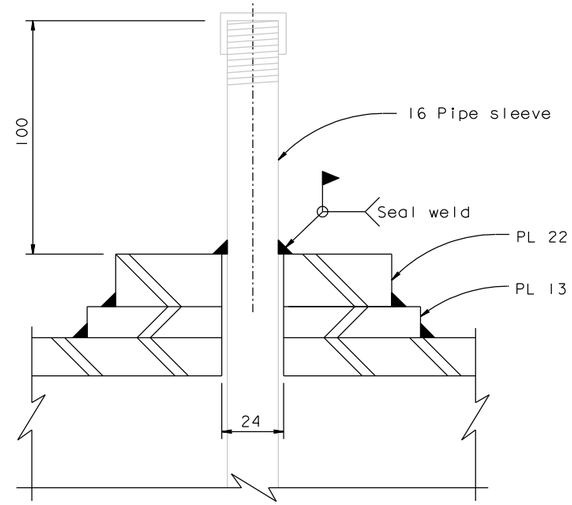

DETAIL C

1:1.25

NOTES:

1. For details not shown, see "Bikepath Details" and "Bikepath Framing Details" sheets.
2. Railing post and bolts not shown for clarity.
3. Exposed portion of pipe shall be painted.
4. Galvanized surfaces shall be repaired after seal welding. Areas with damaged paint or with no paint shall be cleaned and painted.

CONTRACT CHANGE ORDER NO. _____
SHEET ____ OF ____

REQUESTS FOR INFORMATION NOT ADDRESSED IN THIS CCO REMAIN IN FORCE

ALL DIMENSIONS ARE IN MILLIMETERS UNLESS OTHERWISE SHOWN

R. Valizadeh/V. Toan/Y.L./W.L./F.C.
DESIGN OVERSIGHT
SIGN OFF DATE 04/01/11

MARK	DATE	DESCRIPTIONS	BY	CH'D	CCO#
1	04/01/11	BIKEPATH CONDUIT	RI	TH	73

REVISIONS

	BY	CHECKED
DESIGN	R. Iliya	T. Ho
DETAILS	R. Iliya	T. Ho
QUANTITIES	R. Iliya	T. Ho

PREPARED FOR THE STATE OF CALIFORNIA DEPARTMENT OF TRANSPORTATION

R. Manzanarez
PROJECT ENGINEER

BRIDGE NO. 34-0006L/R
KILOMETER POST 13.2/13.9

SAN FRANCISCO OAKLAND BAY BRIDGE
EAST SPAN SEISMIC SAFETY PROJECT
SELF-ANCHORED SUSPENSION BRIDGE
(SUPERSTRUCTURE & TOWER)

BIKEPATH FRAMING DETAILS NO. 1A

Rev. Date: 5-18-98

ORIGINAL SCALE IN MILLIMETERS FOR REDUCED PLANS 0 10 20 30 40 50 60 70 80 90 100

CU 04
EA 0120F1

DISREGARD PRINTS BEARING EARLIER REVISION DATES → 04/01/11

REVISION DATES (PRELIMINARY STAGE ONLY)

SHEET 402S1 OF

FILE => I:\bb\04-012001\sas\contract plans and cco\cco\cco#73\6-revision 04-01-11\dgn\agbwf01a.dgn

100% PS&E

USERNAME => DWinrow DATE PLOTTED => 01 APR 2011 TIME PLOTTED => 13:54:03

DIST.	COUNTY	ROUTE	KILOMETER POST TOTAL PROJECT	SHEET NO.	TOTAL SHEETS
04	SF	80	13.2/13.9	900R5	1204

REGISTERED ENGINEER - CIVIL

12-6-04
PLANS APPROVAL DATE

REGISTERED PROFESSIONAL ENGINEER Tien Hung Ho No. C 43990 Exp. 6/30/11 CIVIL STATE OF CALIFORNIA

The State of California or its officers or agents shall not be responsible for the accuracy or completeness of electronic copies of this plan sheet.

T.Y. LIN / MOFFATT & NICHOL
825 BATTERY STREET
SAN FRANCISCO, CA 94111

Caltrans now has a web site! To get to the web site, go to: http://www.dot.ca.gov

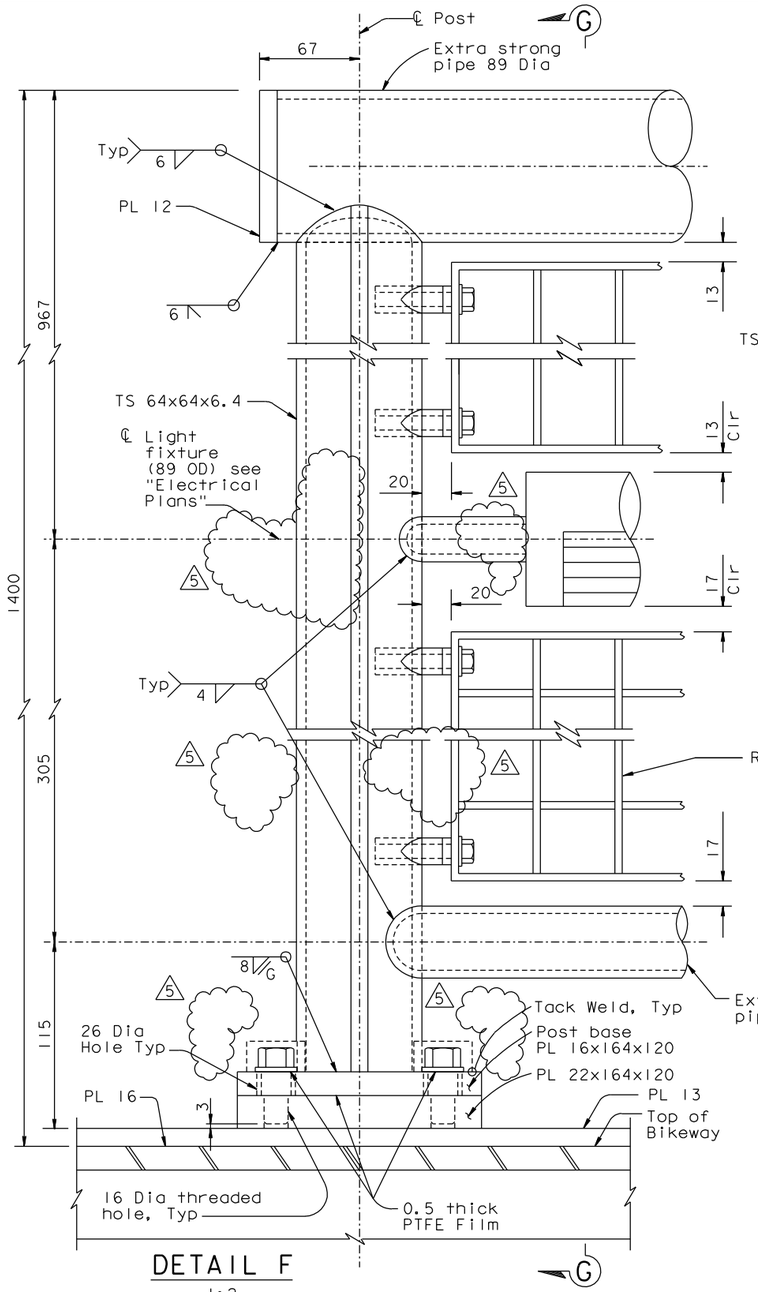

DETAIL F
1:2

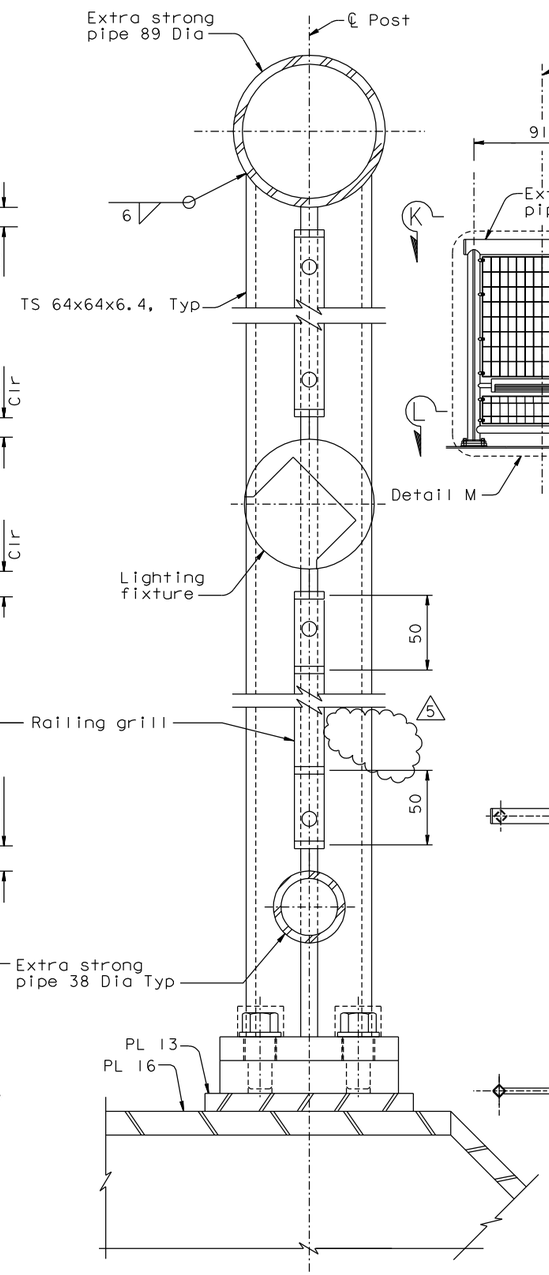

SECTION G-G
1:2

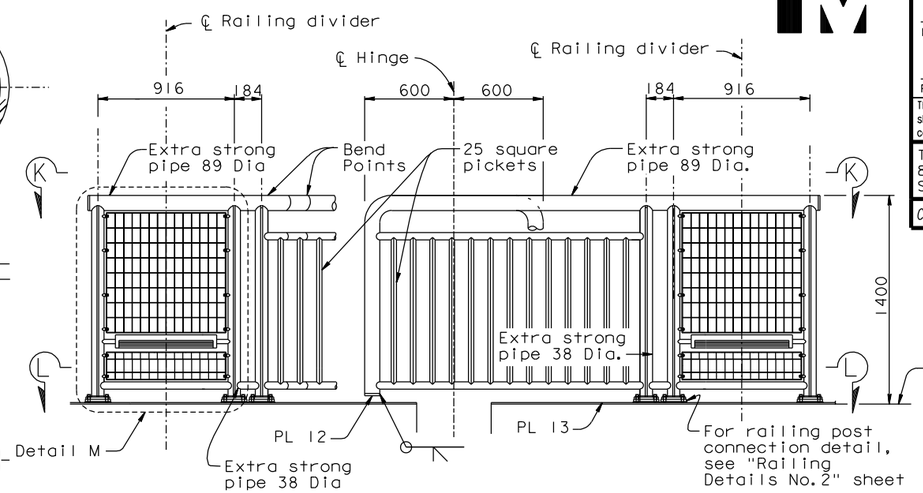

ELEVATION
1:20

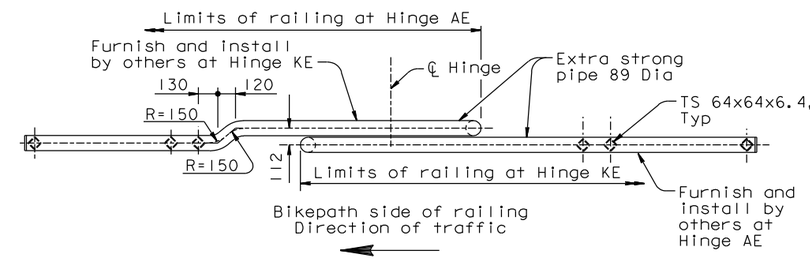

SECTION K-K
1:20

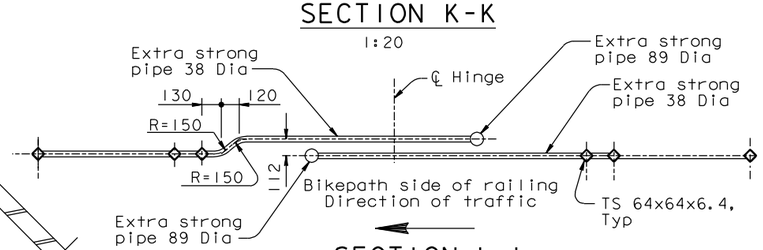

SECTION L-L
1:20

RAILING EXPANSION JOINT DETAILS

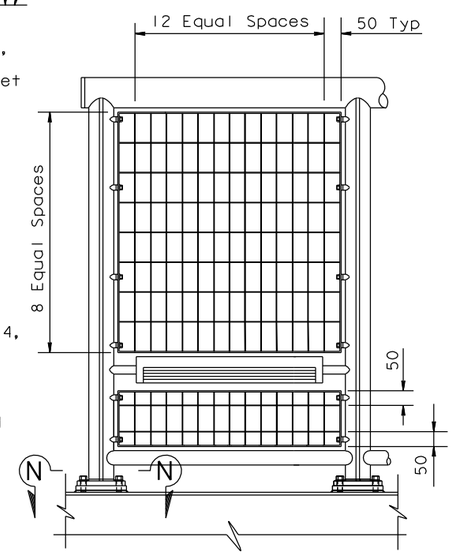

DETAIL M
1:10

NOTES:

1. For details not shown, see "Railing Details No. 1", "Railing Details No. 2" sheets and "Railing Details No. 3A".
2. For expansion joint details, see "Hinge K Expansion Joint Details" and "Hinge A Expansion Joint Details" sheets.
3. Railing to match adjoining Skyway Structure, Contract 04-012024.
4. For details of holes on both North and South divider railings, see "Typical Bikepath Lighting" in the "Roadway Plans" and "Railing Details No. 3A" sheets. (5)
5. For Section N-N, see "Railing Details No. 3A" sheet.

CONTRACT CHANGE ORDER NO. ____
SHEET ____ OF ____

REQUESTS FOR INFORMATION NOT ADDRESSED IN THIS CCO REMAIN IN FORCE

MARK	DATE	DESCRIPTIONS	BY	CH'D	CCO#
5	04/01/11	BIKEPATH CONDUIT	TH	JD	73
4	08/20/10	BIKEPATH DETAILS	TH	CC	99
3	04/22/09	BIKEPATH DETAILS	TH	MN	99
2	01/30/09	BIKEPATH DETAILS	TH	MN	99
1	11/26/08	BIKEPATH DETAILS	TH	MN	99

REVISIONS

R. Valizadeh/V. Toan/Y.L./W.L./F.C.
DESIGN OVERSIGHT
SIGN OFF DATE 04/01/11

DESIGN	BY T. Ho	CHECKED C. Redfield	
DETAILS	BY R. Xu	CHECKED C. Redfield	
QUANTITIES	BY G. Baker	CHECKED K. Cormier	

PREPARED FOR THE STATE OF CALIFORNIA DEPARTMENT OF TRANSPORTATION

R. Manzanarez
PROJECT ENGINEER

BRIDGE NO. 34-0006L/R
KILOMETER POST 13.2/13.9

ALL DIMENSIONS ARE IN MILLIMETERS UNLESS OTHERWISE SHOWN

SAN FRANCISCO OAKLAND BAY BRIDGE
EAST SPAN SEISMIC SAFETY PROJECT
SELF-ANCHORED SUSPENSION BRIDGE
(SUPERSTRUCTURE & TOWER)

RAILING DETAILS NO. 3

Rev. Date: 5-18-98

ORIGINAL SCALE IN MILLIMETERS FOR REDUCED PLANS 0 10 20 30 40 50 60 70 80 90 100

CU 04
EA 0120F1

DISREGARD PRINTS BEARING EARLIER REVISION DATES

REVISION DATES (PRELIMINARY STAGE ONLY) 05/15/99 08/02/99 05/31/01 04/08/02 07/01/02 12/19/02

SHEET 483R5 OF

FILE => I:\bb\04-012001\sas\contract plans and cco\cco\cco#73\6-revision 04-01-11\dgn\akrlg06.dgn

USERNAME => DWinrow DATE PLOTTED => 01 APR 2011 TIME PLOTTED => 13:55:37

100 % PS&E

DIST.	COUNTY	ROUTE	KILOMETER POST TOTAL PROJECT	SHEET NO.	TOTAL SHEETS
04	SF	80	13.2/13.9	900S1R5	1204

REGISTERED ENGINEER - CIVIL

11-26-08

PLANS APPROVAL DATE

REGISTERED PROFESSIONAL ENGINEER Tien Hung Ho No. C 43990 Exp. 6/30/11 CIVIL STATE OF CALIFORNIA

The State of California or its officers or agents shall not be responsible for the accuracy or completeness of electronic copies of this plan sheet.

T.Y. LIN / MOFFATT & NICHOL
825 BATTERY STREET
SAN FRANCISCO, CA 94111

Caltrans now has a web site! To get to the web site, go to: http://www.dot.ca.gov

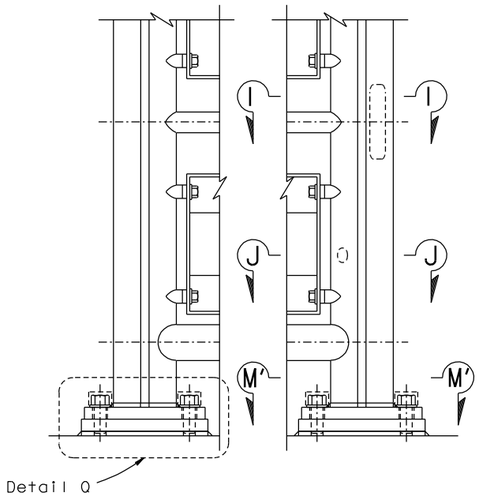

NORTH RAILING ELEVATION (Looking North)
1:5

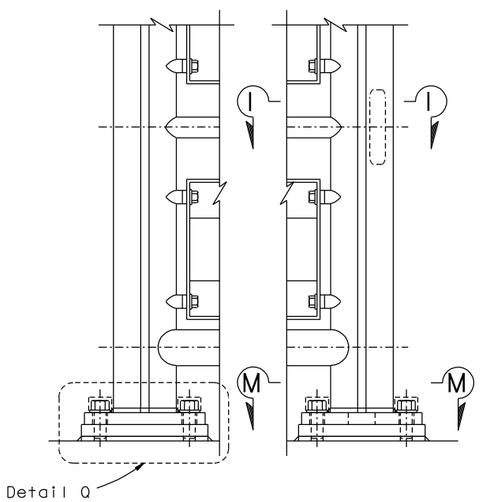

SOUTH RAILING ELEVATION (Looking South)
1:5

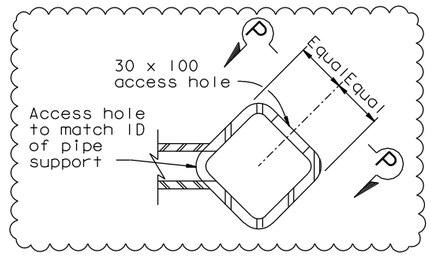

SECTION I-I
1:2

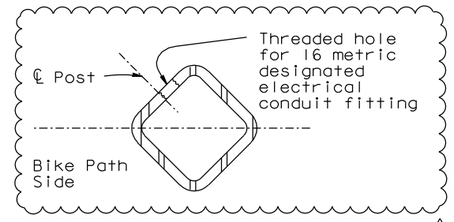

SECTION J-J
1:2

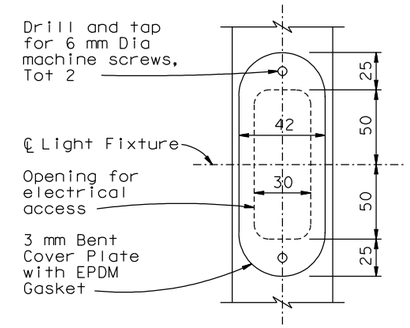

VIEW P-P
1:2

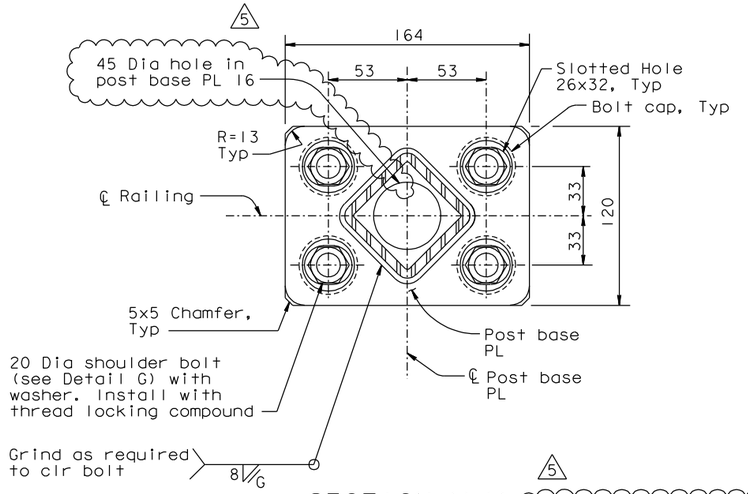

SECTION M-M
1:2

(Section M'-M' similar, see Note 3)

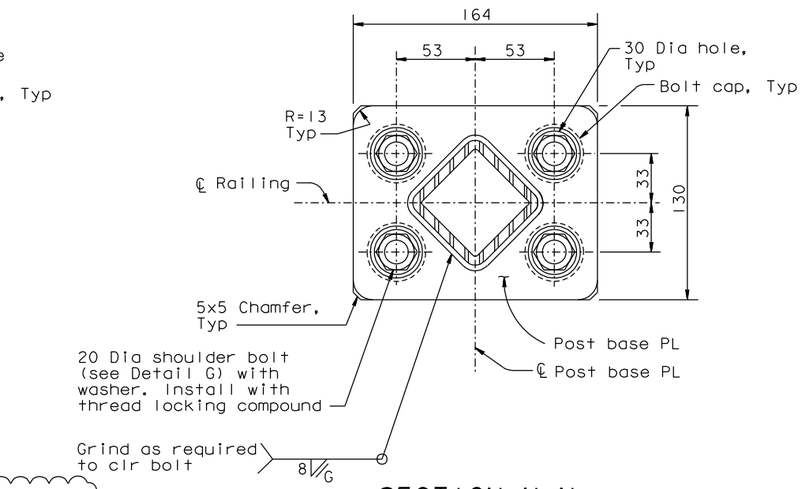

SECTION N-N (See Note 2)
1:2

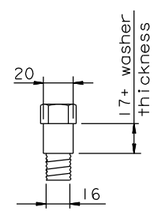

DETAIL G
SHOULDER BOLT
1:2

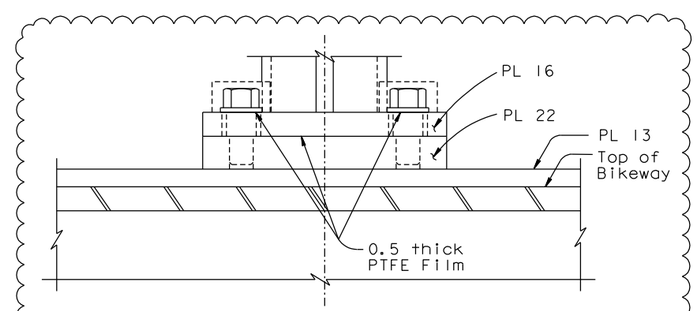

DETAIL Q
1:2

NOTES:

1. DELETED.
2. Section N-N is applicable to post base PL connections in railing type E at Hinge A.
3. Section M'-M' does not have 45 Dia hole in base PL 16.
4. For details not shown, see "Railing Details No.3" sheet.

ALL DIMENSIONS ARE IN MILLIMETERS UNLESS OTHERWISE SHOWN

CONTRACT CHANGE ORDER NO. _____
SHEET ____ OF ____

REQUESTS FOR INFORMATION NOT ADDRESSED IN THIS CCO REMAIN IN FORCE

MARK	DATE	DESCRIPTIONS	BY	CH'D	CCO#
5	04/01/11	BIKEPATH CONDUIT	TH	JD	73
4	08/20/10	BIKEPATH DETAILS	TH	CC	99
3	09/11/09	BIKEPATH DETAILS	TH	MN	99
2	05/08/09	BIKEPATH DETAILS	TH	MN	99
1	01/30/09	BIKEPATH DETAILS	TH	MN	99
0	11/26/08	BIKEPATH DETAILS	TH	MN	99

REVISIONS

R. Valizadeh/V. Toan/Y.L./W.L./F.C.
DESIGN OVERSIGHT
Roya Valizadeh / Vong Toan / Y. Liu
SIGN OFF DATE 04/01/11

	BY	CHECKED
DESIGN	T. Ho	M. Nader
DETAILS	T. Ho	M. Nader
QUANTITIES	T. Ho	M. Nader

PREPARED FOR THE STATE OF CALIFORNIA DEPARTMENT OF TRANSPORTATION

R. Manzanarez
PROJECT ENGINEER

BRIDGE NO. 34-0006L/R
KILOMETER POST 13.2/13.9

SAN FRANCISCO OAKLAND BAY BRIDGE
EAST SPAN SEISMIC SAFETY PROJECT
SELF-ANCHORED SUSPENSION BRIDGE
(SUPERSTRUCTURE & TOWER)

RAILING DETAILS NO. 3A

Rev. Date: 5-18-98

ORIGINAL SCALE IN MILLIMETERS FOR REDUCED PLANS 0 10 20 30 40 50 60 70 80 90 100

CU 04
EA 0120F1

DISREGARD PRINTS BEARING EARLIER REVISION DATES 11/26/08

REVISION DATES (PRELIMINARY STAGE ONLY)

SHEET 483S1R5 OF

FILE => I:\bb\04-012001\sas\contract plans and cco\cco\cco#73\6-revision 04-01-11\dgn\akrig06s01.dgn

100% PS&E

USERNAME => DWinrow DATE PLOTTED => 01 APR 2011 TIME PLOTTED => 13:57:52

DIST.	COUNTY	ROUTE	KILOMETER POST TOTAL PROJECT	SHEET NO.	TOTAL SHEETS
04	SF	80	13.2/13.9	901R4	1204

REGISTERED ENGINEER - CIVIL

12-6-04
PLANS APPROVAL DATE

REGISTERED PROFESSIONAL ENGINEER Tien Hung Ho No. C 43990 Exp. 6/30/11 CIVIL STATE OF CALIFORNIA

The State of California or its officers or agents shall not be responsible for the accuracy or completeness of electronic copies of this plan sheet.

T.Y. LIN / MOFFATT & NICHOL
825 BATTERY STREET
SAN FRANCISCO, CA 94111

Caltrans now has a web site! To get to the web site, go to: http://www.dot.ca.gov

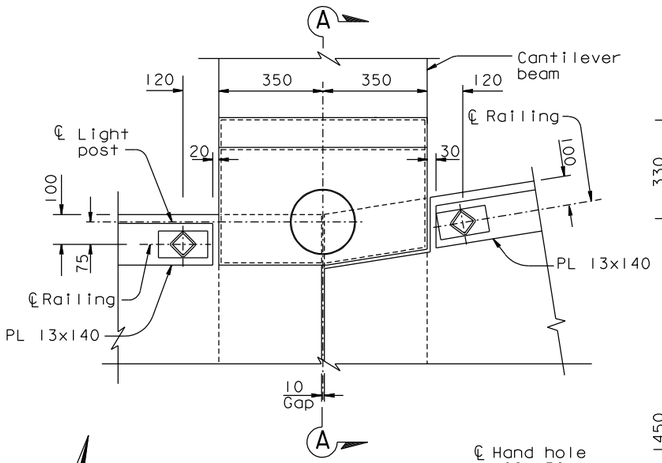

DETAIL A
1:10

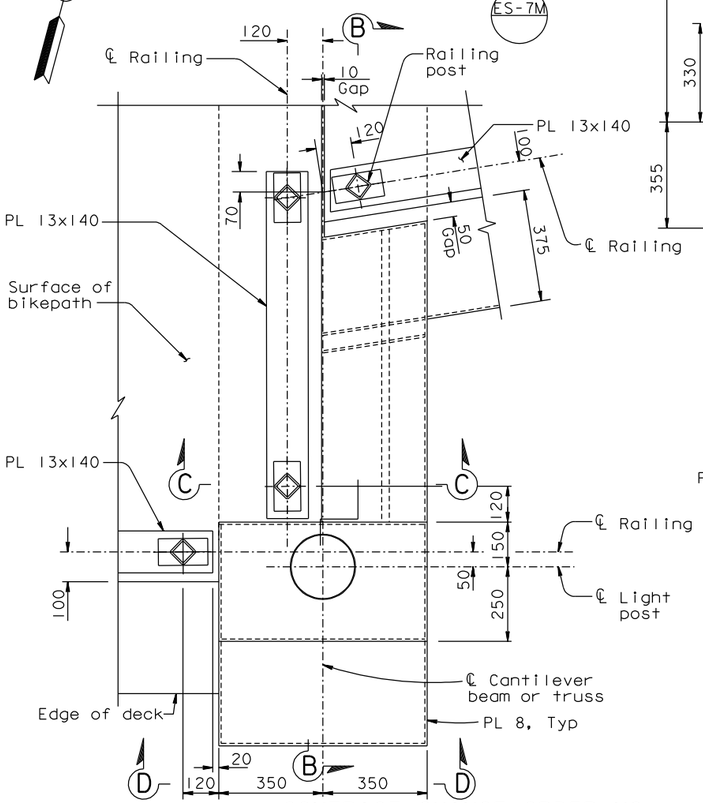

DETAIL B
1:10

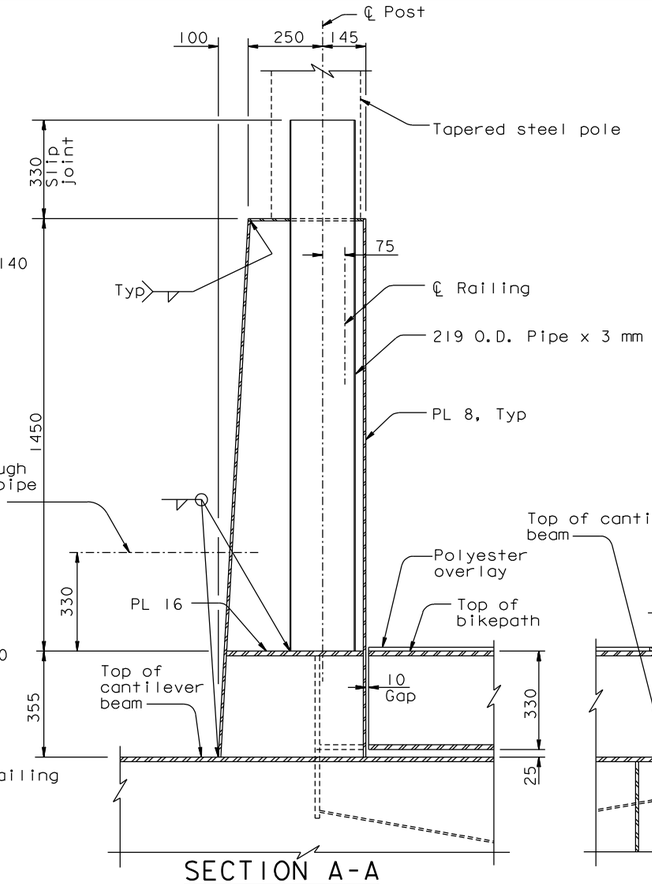

SECTION A-A
1:10

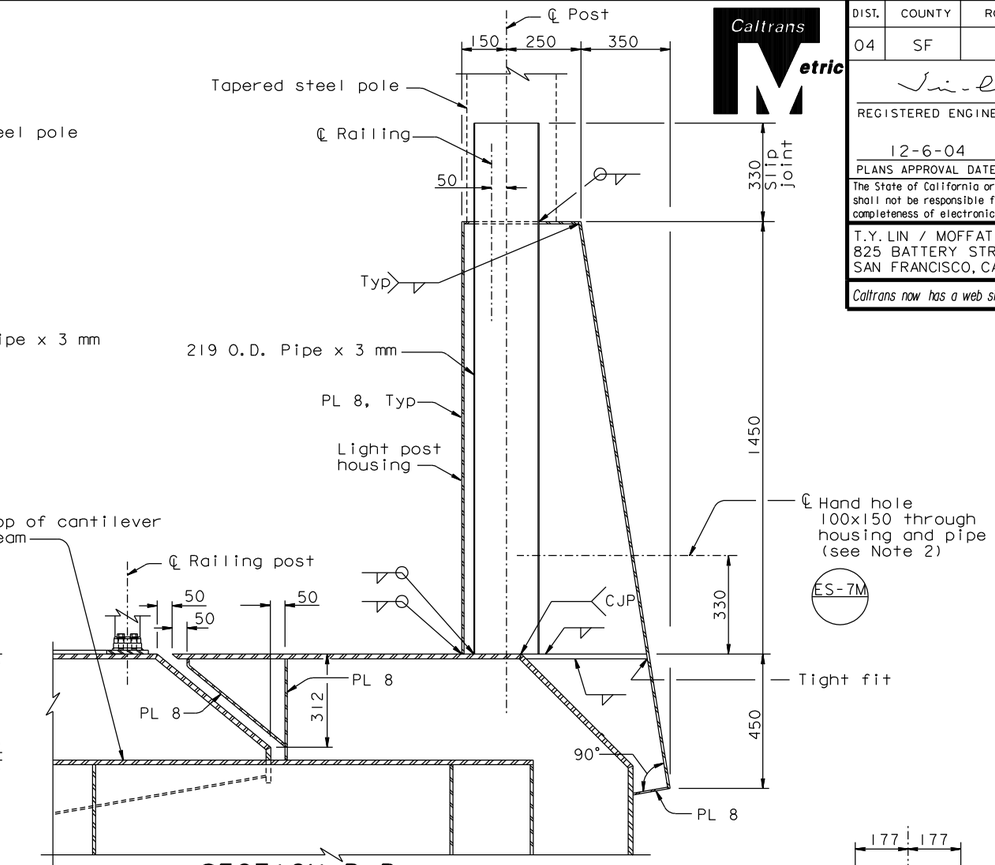

SECTION B-B
1:10

LIGHT POST HOUSING DETAILS AT BELVEDERES

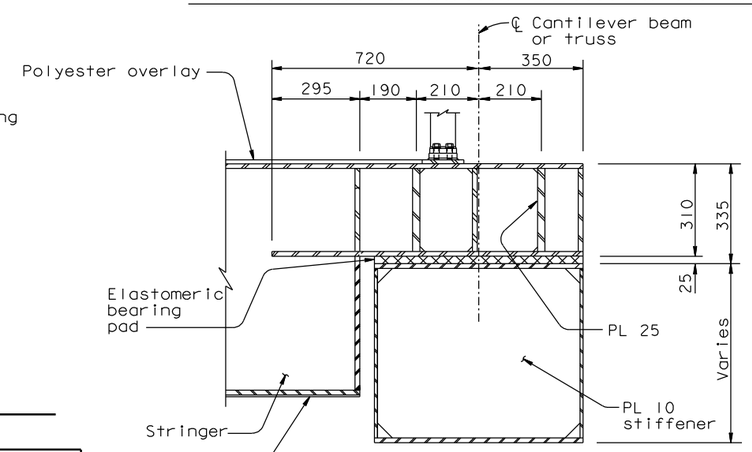

SECTION C-C
1:10

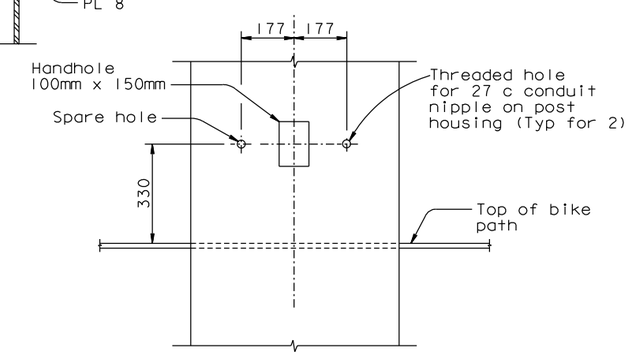

SECTION D-D
1:10

NOTES:

1. For tapered steel pole slip joint details, see "Road Plans".
2. Hand hole cover for exterior opening only. Cover shall be a "Tamper Resistant Handhole Cover" per Caltrans Standard ES-7M. (4)

CONTRACT CHANGE ORDER NO. ____
SHEET ____ OF ____

REQUESTS FOR INFORMATION NOT ADDRESSED IN THIS CCO REMAIN IN FORCE

MARK	DATE	DESCRIPTIONS	BY	CH'D	CCO#
4	04/01/11	BIKEPATH CONDUIT	TH	JD	73
3	08/20/10	BIKEPATH DETAILS	CC	TH	99
2	05/28/10	BIKEPATH CONDUIT	AB	TH	73
1	09/25/09	BIKEPATH DETAILS	TH	HT	99

REVISIONS

R. Valizadeh/V. Toan/Y.L./W.L./F.C.
DESIGN OVERSIGHT
SIGN OFF DATE 04/01/11

	BY	CHECKED
DESIGN	T. Ho	C. Redfield
DETAILS	R. Xu	C. Redfield
QUANTITIES	G. Baker	K. Cormier

PREPARED FOR THE STATE OF CALIFORNIA DEPARTMENT OF TRANSPORTATION

R. Manzanarez
PROJECT ENGINEER

BRIDGE NO. 34-0006L/R
KILOMETER POST 13.2/13.9

ALL DIMENSIONS ARE IN MILLIMETERS UNLESS OTHERWISE SHOWN

SAN FRANCISCO OAKLAND BAY BRIDGE
EAST SPAN SEISMIC SAFETY PROJECT
SELF-ANCHORED SUSPENSION BRIDGE
(SUPERSTRUCTURE & TOWER)

RAILING DETAILS NO. 4

Rev. Date: 5-18-98

ORIGINAL SCALE IN MILLIMETERS FOR REDUCED PLANS 0 10 20 30 40 50 60 70 80 90 100

CU 04
EA 0120F1

DISREGARD PRINTS BEARING EARLIER REVISION DATES

REVISION DATES (PRELIMINARY STAGE ONLY) 05/15/99 08/02/99 05/31/01 04/08/02 07/01/02 12/19/02

SHEET 484R4 OF

FILE => L:\BB\04-012001\SAS\Contract Plans and CCO\CCO\CCO#73\6-Revision 04-01-11\DGN\akrlg07.dgn

100% PS&E

USERNAME => DWinrow DATE PLOTTED => 01 APR 2011 TIME PLOTTED => 15:14:38