DIST.	COUNTY	ROUTE	KILOMETER POST TOTAL PROJECT	SHEET NO.	TOTAL SHEETS
04	SF	80	13.2/13.9	901R4	1204

REGISTERED ENGINEER - CIVIL

12-6-04
PLANS APPROVAL DATE

REGISTERED PROFESSIONAL ENGINEER Tien Hung Ho No. C 43990 Exp. 6/30/11 CIVIL STATE OF CALIFORNIA

The State of California or its officers or agents shall not be responsible for the accuracy or completeness of electronic copies of this plan sheet.

T.Y. LIN / MOFFATT & NICHOL
825 BATTERY STREET
SAN FRANCISCO, CA 94111

Caltrans now has a web site! To get to the web site, go to: http://www.dot.ca.gov

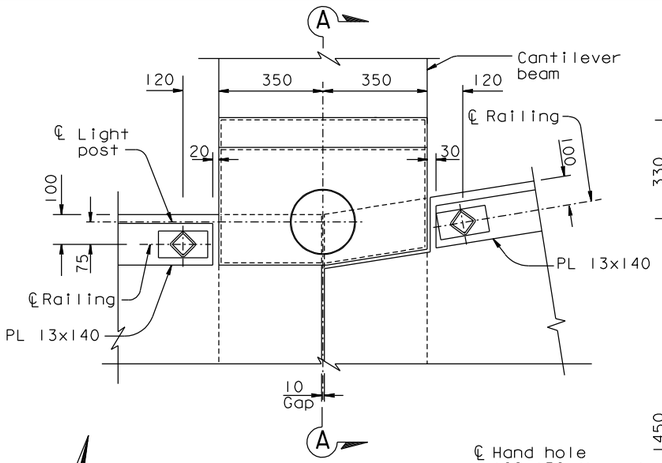

DETAIL A
1:10

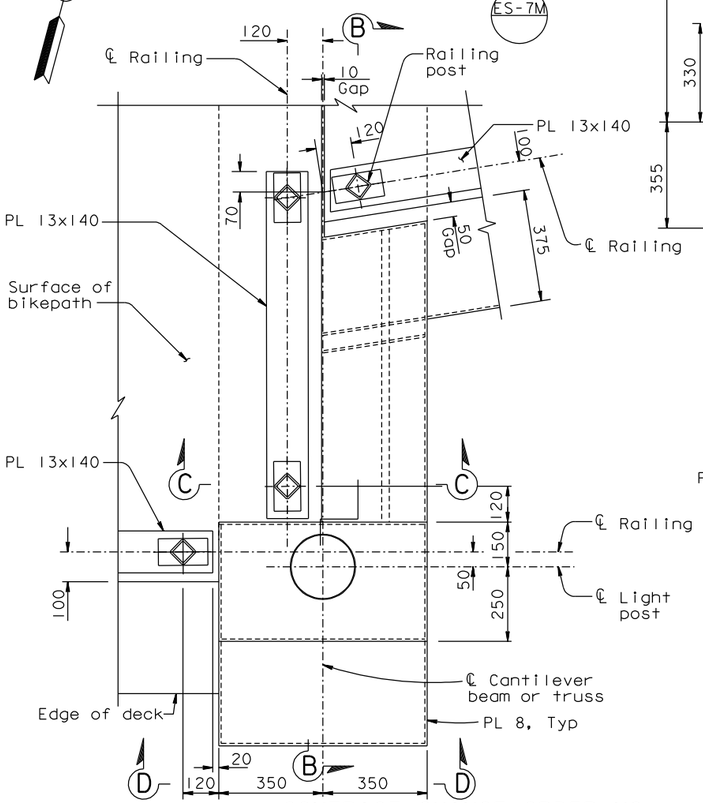

DETAIL B
1:10

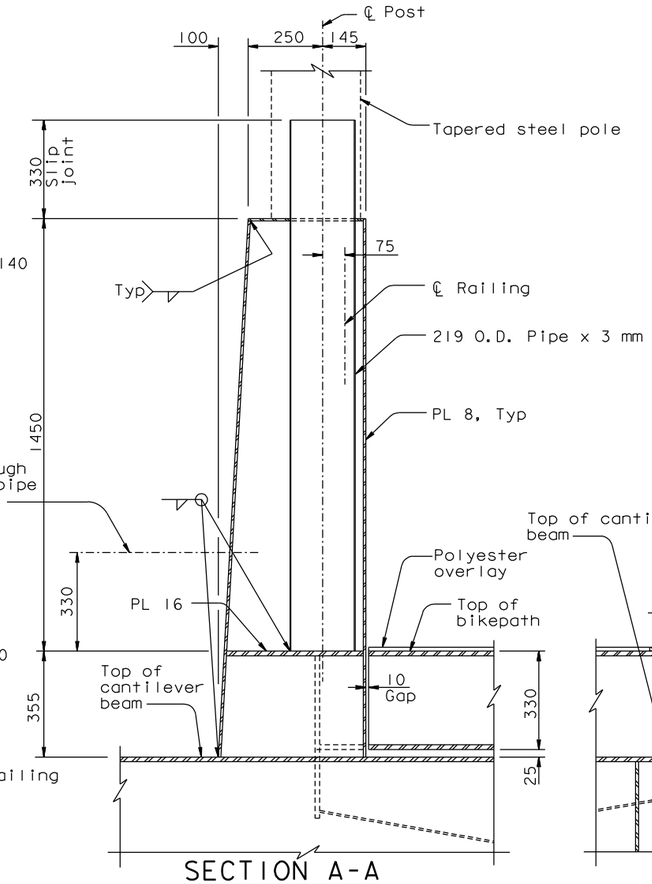

SECTION A-A
1:10

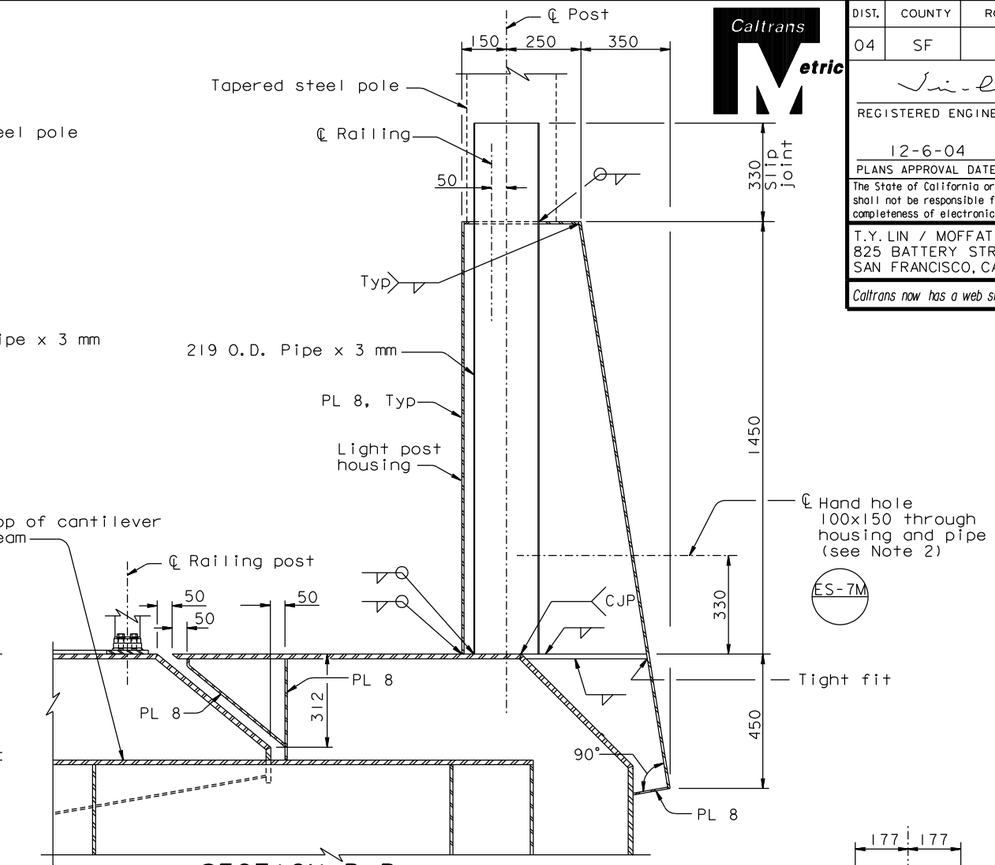

SECTION B-B
1:10

LIGHT POST HOUSING DETAILS AT BELVEDERES

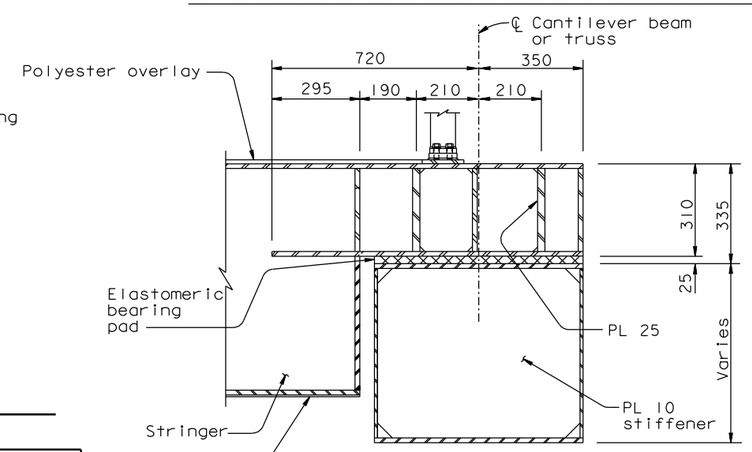

SECTION C-C
1:10

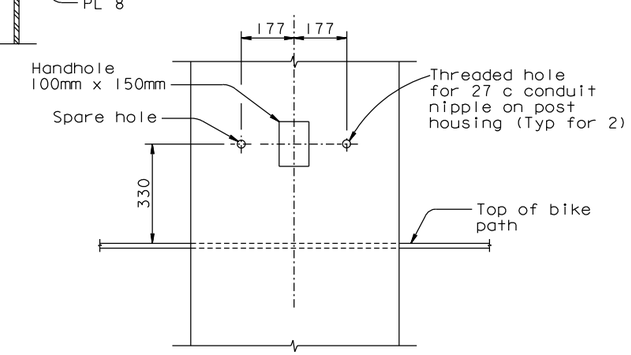

SECTION D-D
1:10

NOTES:

1. For tapered steel pole slip joint details, see "Road Plans".
2. Hand hole cover for exterior opening only. Cover shall be a "Tamper Resistant Handhole Cover" per Caltrans Standard ES-7M. (4)

CONTRACT CHANGE ORDER NO. ____
SHEET ____ OF ____

REQUESTS FOR INFORMATION NOT ADDRESSED IN THIS CCO REMAIN IN FORCE

MARK	DATE	DESCRIPTIONS	BY	CH'D	CCO#
4	04/01/11	BIKEPATH CONDUIT	TH	JD	73
3	08/20/10	BIKEPATH DETAILS	CC	TH	99
2	05/28/10	BIKEPATH CONDUIT	AB	TH	73
1	09/25/09	BIKEPATH DETAILS	TH	HT	99

REVISIONS

R. Valizadeh/V. Toan/Y.L./W.L./F.C.
DESIGN OVERSIGHT
SIGN OFF DATE 04/01/11

	BY	CHECKED
DESIGN	T. Ho	C. Redfield
DETAILS	R. Xu	C. Redfield
QUANTITIES	G. Baker	K. Cormier

PREPARED FOR THE STATE OF CALIFORNIA DEPARTMENT OF TRANSPORTATION

R. Manzanarez
PROJECT ENGINEER

BRIDGE NO. 34-0006L/R
KILOMETER POST 13.2/13.9

ALL DIMENSIONS ARE IN MILLIMETERS UNLESS OTHERWISE SHOWN

SAN FRANCISCO OAKLAND BAY BRIDGE
EAST SPAN SEISMIC SAFETY PROJECT
SELF-ANCHORED SUSPENSION BRIDGE
(SUPERSTRUCTURE & TOWER)

RAILING DETAILS NO. 4

Rev. Date: 5-18-98

ORIGINAL SCALE IN MILLIMETERS FOR REDUCED PLANS 0 10 20 30 40 50 60 70 80 90 100

CU 04
EA 0120F1

DISREGARD PRINTS BEARING EARLIER REVISION DATES

REVISION DATES (PRELIMINARY STAGE ONLY) 05/15/99 08/02/99 05/31/01 04/08/02 07/01/02 12/19/02

SHEET 484R4 OF

FILE => L:\BB\04-012001\SAS\Contract Plans and CCO\CCO\CCO#73\6-Revision 04-01-11\DGN\akrlg07.dgn

100% PS&E

USERNAME => DWinrow DATE PLOTTED => 01 APR 2011 TIME PLOTTED => 15:14:38