DIST	COUNTY	ROUTE	KILOMETER POST TOTAL PROJECT	SHEET No	TOTAL SHEETS
04	SF	80	13.2/13.9	72R6	1204

REGISTERED STRUCTURAL ENGINEER — DATE 12/19/02

12-6-04
PLANS APPROVAL DATE

REGISTERED PROFESSIONAL ENGINEER — Mee Shing Owyang — No. 24960 — Exp. 12/31/07 — CIVIL — STATE OF CALIFORNIA

PARSONS BRINCKERHOFF QUADE & DOUGLAS, INC.
303 SECOND STREET, SUITE 700 N
SAN FRANCISCO, CA 94107

The State of California or its officers or agents shall not be responsible for the accuracy or completeness of electronic copies of this plan sheet.

Caltrans now has a web site! To get to the web site, go to http://www.dot.ca.gov

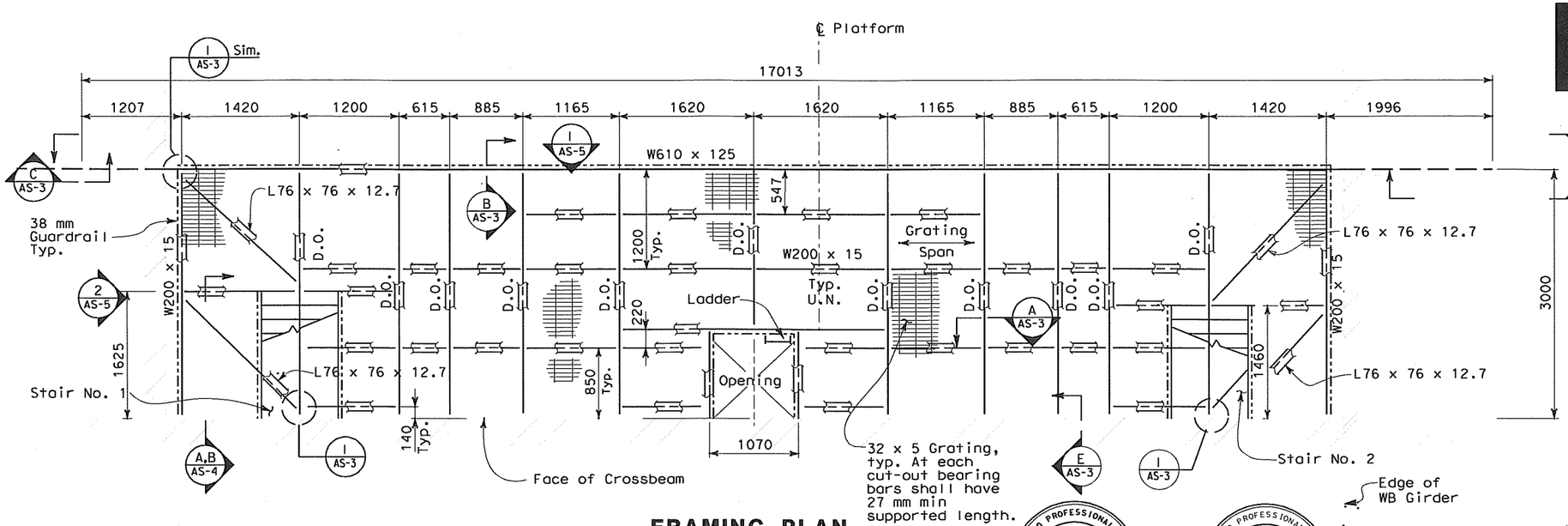

FRAMING PLAN
SCALE: 1:30

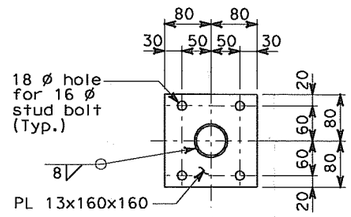

SECTION C
SCALE: 1:5

SECTION B
SCALE: 1:10

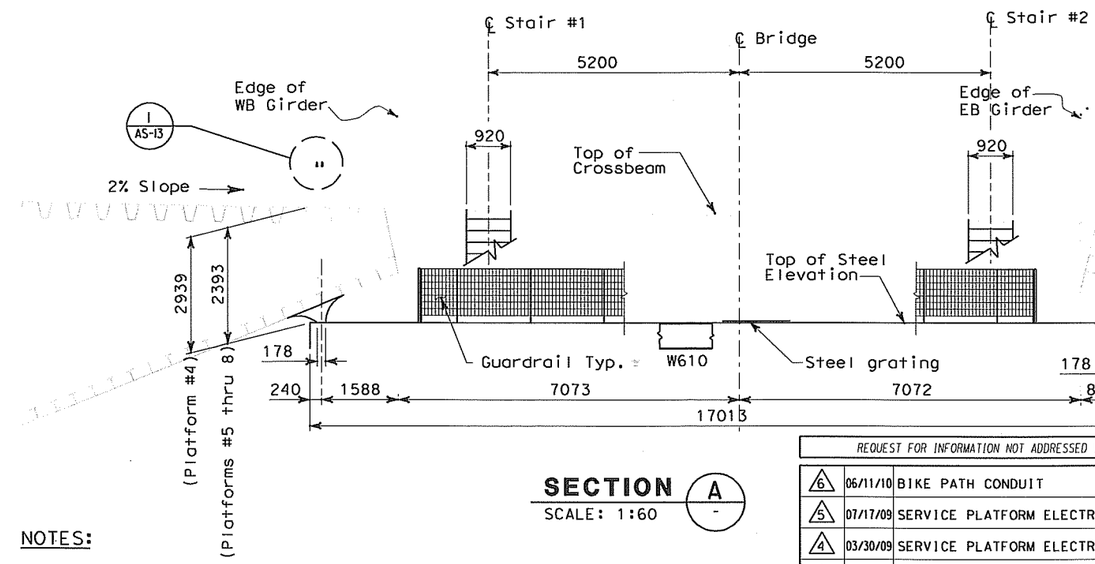

SECTION A
SCALE: 1:60

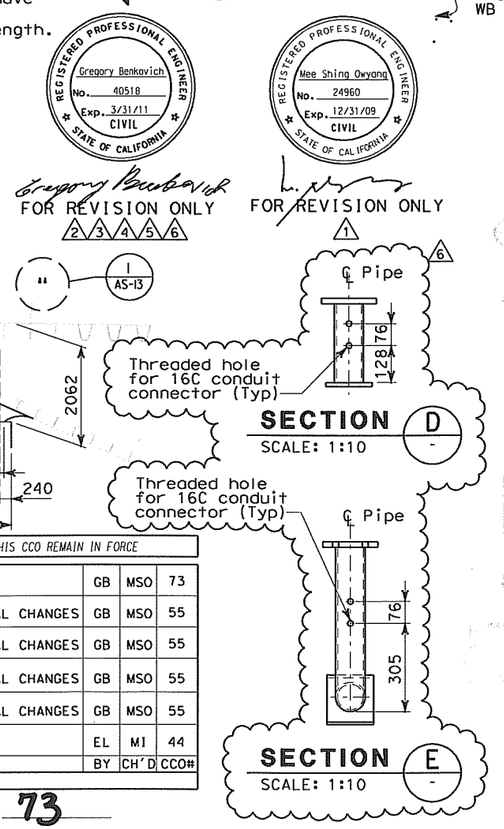

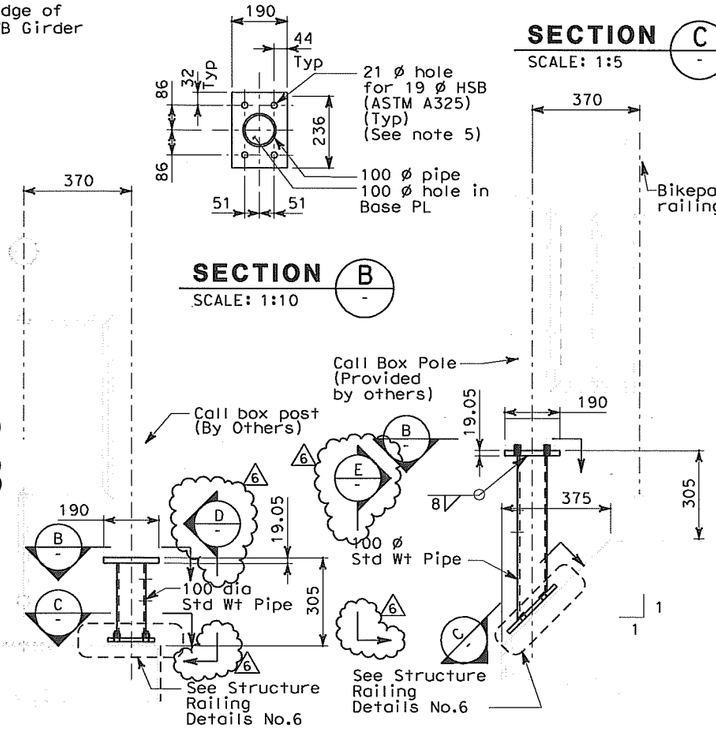

ALL DIMENSIONS ARE IN MILLIMETERS UNLESS OTHERWISE SHOWN

NOTES:

1. Total weight of platform 5987 kg
2. The Contractor shall verify all controlling field dimensions before ordering or fabricating any materials.
3. For platform locations, see electrical plans.
4. For anchor bolt locations, spacing and other requirements, see electrical plan.
5. For Call Box locations, see electrical plan sheet E-397. Bolt hole size and spacings shown are for information only contractor to verify the actual bolt hole size and spacings.

REQUEST FOR INFORMATION NOT ADDRESSED IN THIS CCO REMAIN IN FORCE

MARK	DATE	DESCRIPTIONS	BY	CH'D	CCO#
6	06/11/10	BIKE PATH CONDUIT	GB	MSO	73
5	07/17/09	SERVICE PLATFORM ELECTRICAL CHANGES	GB	MSO	55
4	03/30/09	SERVICE PLATFORM ELECTRICAL CHANGES	GB	MSO	55
3	01/07/09	SERVICE PLATFORM ELECTRICAL CHANGES	GB	MSO	55
2	06/12/08	SERVICE PLATFORM ELECTRICAL CHANGES	GB	MSO	55
1	03/04/08	BARRIER MODIFICATIONS.	EL	MI	44

REVISIONS

CONTRACT CHANGE ORDER NO. 73
SHEET 2 OF 52

Bob Zandipour — DESIGN OVERSIGHT
4-4-04 — SIGN OFF DATE

	BY	CHECKED
DESIGN	A. Van Felten	M. S. Owyang
DETAILS	A. Van Felten	M. S. Owyang
QUANTITIES	M.S. Owyang	R. Parrino

PREPARED FOR THE STATE OF CALIFORNIA DEPARTMENT OF TRANSPORTATION

Gene Lusherovich — PROJECT ENGINEER

BRIDGE NO. 34-0006
KILOMETER POST 13.2/13.9

SAS SUPERSTRUCTURE
SERVICE PLATFORM FRAMING PLAN
AS-2

DESIGN DETAIL SHEET (METRIC) (REV. 3/1/98)

ORIGINAL SCALE IN MILLIMETERS FOR REDUCED PLANS 0 10 20 30 40 50 60 70 80 90 100

CU 04251
EA 0120F1

DISREGARD PRINTS BEARING EARLIER REVISION DATES

REVISION DATES (PRELIMINARY STAGE ONLY) — SHEET — OF

FILE => T:\13103\MS\pse\SAS Struc\CCO\SAS CCO73\04-0120f1_0072R06.dgn

USERNAME => reyesl DATE PLOTTED => 6/8/2010 TIME PLOTTED => 4:06:04 PM

$FREQUEST

DIST	COUNTY	ROUTE	KILOMETER POST TOTAL PROJECT	SHEET No	TOTAL SHEETS
04	SF	80	13.2/13.9	93R10	1204

REGISTERED ELECTRICAL ENGINEER 12/19/02 DATE

12-6-04
PLANS APPROVAL DATE

PB POWER, Inc.
A Parsons Brinckerhoff Company
303 Second St., Suite 700N
San Francisco, CA 94107-1317

REGISTERED PROFESSIONAL ENGINEER JENS ERLINGSSON No. 8249 Exp. 9/30/06 ELECTRICAL STATE OF CALIFORNIA

The State of California or its officers or agents shall not be responsible for the accuracy or completeness of electronic copies of this plan sheet.

Caltrans now has a web site! To get to the web site, go to http://www.dot.ca.gov

Caltrans Metric

TRAFFIC OPERATIONS SYSTEMS (TOS)

AVO	Analog Video Output
CCR	Camera Control Receiver
CCU	Camera Control Unit
CIA	Controller Interface Assembly
COMM	Communication
FDU	Fiber Distribution Unit
F/O	Fiber Optic
FODM	Fiber Optic Data Modem
FDC	Fiber Optic Drop Cable
FPC	Fiber Optic Pigtail Cable
FSC	Fiber Splice Closure
FTC	Fiber Optic Trunkline Cable
IF	Input File
MVDS	Microwave Vehicle Detection Sensor
PDA	Power Distribution Assembly
PL	Preformed Loop Detection Station
SCA	Serial Cable Assembly
SMFO	Single Mode Fiber Optic
TB	Terminal Box
TSC	Trunkline Splice Closure
TVCP	CCTV Camera Control Power Cable
TVC	CCTV Camera Control Cable
TVL	CCTV Camera Video Cable
TVP	CCTV Camera Power Cable
VTDD	Video Transmitter Duplex Data

PROJECT NOTES

1	27C, 2#12 + #12 G.
2	27C, 2#10 + #10 G.
3	27C, 4#10 + #10 G.
4	27C, 3#10 + #10 G.
5	27C (Type 4), 2#12 + #12 G.
6	27C (Type 4), 2#10 + #10 G.
7	41C, 2-6 pairs #18, IS/OA.
8	78C, 50 Pairs #18, IS/OA.
9	27C, 3/C #6 + #8G.
10	21C, 2-1 pair #18 (for Call Box signal) shielded pairs and overall shield.
11	21C, 3#12 (for Call Box power).
12	21C, (4) 1 pair #18 (for Call Box signal). Part of (2) 1-2 pairs #18, shielded pairs and overall shield.
13	78C, 2#2 + #6 G and 2#10 + #10 G (for CMS Power).
14	78C, Harness #4 and Harness #5 (for CMS Signal).
15	41C, Cable type TVP and TVCP (for CCTV Power).
16	41C, Cable type TVC and TVL (for CCTV Control Signal).
18	41C, Cable type MVDS DLC (for MVDS Signal).
20	78C, Cable type 10 DLC (for Preformed Loop Signal).
21	27C (Liquidtight flexible metal conduit) 6#10 + #10 G.
22	27C (Liquidtight flexible metal conduit) 3#10 + #10 G.
23	27C, 7#10 + #10 G.
24	27C, 6#10 + #10 G.

REGISTERED PROFESSIONAL ENGINEER FADI WALIEDDINE No. 11465 Exp. 12/31/2009 ELECTRICAL STATE OF CALIFORNIA

FOR REVISION ONLY 4 5 6

REGISTERED PROFESSIONAL ENGINEER SYN YEE CHIN No. 18186 Exp. 09/30/2011 ELECTRICAL STATE OF CALIFORNIA

Syn Yee Chin
FOR REVISION ONLY 7 8 9 10

PROJECT NOTES (Continuation)

25	27C, 7#10 + #10 G.
26	41C, 3#6 + #8 G.
27	41C, 3#8 + #10 G.
28	21C, PVC coated - 2#10 + #10 G.
29	21C, PVC coated, 3#12 (for Call Box Power).
30	500 kcmil Bare Copper Wire.
31	250 kcmil Bare Copper Wire.
32	#4/0 Bare Copper Wire.
33	#2 Bare Copper Wire.
34	41C, 3#6 + #8 G, 3#8 + #10 G.
35	41C, 6#8 + #10 G.
36	~~21C, PVC coated, 1-2 pairs #18,~~ shielded pairs and overall shield ~~(for Call Box signal).~~ 9
37	16C, (Liquidtight flexible metal conduit) 2#12 + #12G, (for Bike Path lighting) 9 10
38	~~16C, Liquidtight flexible metal conduit with PVC overall jacket 1-2 pairs #18,~~ shielded pairs and overall shield (for Call Box signal). 9
39	16C, Liquidtight flexible metal conduit with PVC overall jacket 3#12, (for Call Box power) 10
40	78C, Cable Type A Fiber Optic.
41	21C, (Liquidtight flexible metal conduit) 2#10 + 10 G.
42	27C, 2#12 + #12G, 2#10 + #10G.
43	21C, (Liquidtight flexible metal conduit) 2#12 + 12 G.
44	41C, 2#12 + #12 G, 6#10 + #10 G.
45	27C, 2#12 + #12 G, 4#10 + #10 G.
46	27C, Liquidtight flexible metal conduit, 4#10 + #10G.
47	41C, Liquidtight flexible metal conduit, (MVDS DLC).
48	27C, 3#6 + #8G. Liquidtight flexible metal conduit.
49	21C, PVC coated, 2#10 + #10G & 2/C #14
50	21C Liquidtight flexible metal conduit 2#14 + #14G, 2/C #14
51	41C Liquidtight flexible metal conduit 3#6 + #8G, 2/C #14
52	41C, Liquidtight flexible metal conduit 4#10 + 2#10 G
53	41C, PVC coated 4#10 + 2#10 G
54	27C, 4#10 + 2#10 G.
55	41C, 6#10 + 2#10 G 2#12 + #12 G
56	21C, 2#10 + #10 G
57	41C, 6#10 + 2#10 G
58	21C, 2#12 + #12 G
59	21C, 3#10 + #10 G
60	41C, 8#10 + 3#10 G 2#12 + #12 G
61	27C, 3#10 + 2#10 G 2#12 + #12 G
62	41C, 6#10 + 3#10 G
63	41C, 8#10 + 3#10 G
64	41C, 6#10 + 2#10 G, 2#12 + #12 G
65	21C, 4#10 + #10 G
66	41C, 9#10 + 3#10 G
67	21C, (Liquidtight flexible metal conduit) 2#10 + #10G, EPR insulation. 9
68	16C, RGS (conduit by others) 2#12 + #12G 9 10

7 REVISIONS SUPERCEDED 9

REGISTERED PROFESSIONAL ENGINEER MARCELL FUMIO TAKAKI No. E 8651 Exp. 9/30/2008 ELECTRICAL STATE OF CALIFORNIA

FOR REVISION ONLY 1

REGISTERED PROFESSIONAL ENGINEER S. A. ESTOQUE, JR. No. E-10151 Exp. 12/31/2008 ELECTRICAL STATE OF CALIFORNIA

FOR REVISION ONLY 2 3

REQUEST FOR INFORMATION NOT ADDRESSED IN THIS CCO REMAIN IN FORCE

MARK	DATE	DESCRIPTIONS	BY	CH'D	CCO#
10	11/09/11	BIKE PATH CONDUIT	TW	NK	73
9	04/20/11	BIKE PATH CONDUIT	TW	RG	73
8	04/20/11	CABLE ELECTRICAL-LED AVIATION LIGHTS	RR	RG	72S1
7	07/16/10	BIKE PATH CONDUIT	TW	RG	73
6	12/23/09	TOWER BASE MEP	RR TW	RG FW	79
5	12/11/09	TOWER UTILITY PANELS	JS TW	RG FW	70
4	10/10/08	LIGHTING REVISIONS	RY AG	RG FW	43
3	09/24/08	CABLE ELECTRICAL	RR AG	RG SE	72
2	02/25/08	CABLE TRAY CHANGES	RG	SE	42S1
1	02/19/08	ELECTRICAL MODIFICATIONS	MP EL	RR	42

REVISIONS

CONTRACT CHANGE ORDER NO. 73
SHEET 3 OF 52

GENERAL NOTES

1. Conduit routing is diagrammatic. Pull box locations shall be located as shown on plan drawings. The Contractor shall provide additional pull boxes as required. Exact locations of equipment and devices may be adjusted depending on field conditions or by the Engineer.
2. Minimum size of conduits shall be 21 mm. Exposed conduits shall be PVC coated rigid galvanized steel, and conduits located inside girder shall be rigid galvanized steel. (unless noted otherwise) 9
3. Conduit fittings for 78 mm conduits and larger shall have a 610 mm minimum bending radius.
4. All conduits, including spares, shall be provided with pull wires prior to cable installations.
5. All equipment and devices shall be provided with nameplate tags per drawings.
6. All feeders and branch circuits shall be provided with ground wire.
7. 15 kV splice boxes shall be installed as shown and permanently marked "DANGER-HIGH VOLTAGE-KEEP OUT". The letters shall be block type and at least 50 mm in height.
8. The Contractor shall label all conductors and cables per wiring diagrams.
9. Padlocks shall be installed on all cabinets located on the platforms to prevent unauthorized access.
10. Call boxes will be State-furnished. (The Contractor shall install and terminate conductors per wiring diagram.
11. Ladder type cable trays shall be installed for each 15 kV and 600 V systems.
12. Solid bottom cable trays shall be installed for each low level signals, CALTRANS communications, fiber optic systems, and for Non-Caltrans utilities.
13. For Strong Motion Detection System general notes, see sheet E-361.
14. All E sheets are accurate for electrical work only.
15. All dimensions are in millimeters unless otherwise shown.
16. All unused conductors inside pull boxes shall be taped and coiled.
17. "Similar" when shown on the plans means this detail is applicable to different structure and conduit sizes.
18. Electrical fixtures shall not be field welded to the box girders or crossbeams. All welding to the box girders and crossbeams shall be shown on the box girder and crossbeam shop drawings for review and approval by the Engineer.
19. All welding of electrical fixtures to the tower shall be shown on the tower shop drawings for review and approval by the Engineer.
20. All connections to steel elements of the self-anchored suspension bridge superstructure of electrical equipment and fixtures, including conduits, pull boxes, lighting fixtures, messenger cables and others, shall be shop welded or bolted. All connection details shall appear on the working drawings for review and approval by the Engineer.
21. Prior to ordering any cable tray support structures, the Contractor shall:
    - Refer to Structural sheets to determine the locations of cable tray support structures.
    - Determine, based upon field conditions, when and where to use cable tray vertical or horizontal bends, horizontal tees or reducers.
    - Refer to AS-sheets to determine the type of cable tray support to use based on field conditions.
    - Cable tray support structures shown on the AS-sheets are generic and may have to be adapted to suit field conditions.
    - All modifications to the cable tray support structures as shown on the AS-sheets shall be approved by the Resident Engineer.
22. All installation of electrical conduit, equipment or pull boxes shall be either shop welded or bolted.
23. All cable trays shall be securely anchored to support. Appropriate type of anchors (hold down brackets, hold down clamps or guides) shall be used to suit the cable tray type, location and supports. For similar attachment details, see TYPE I & II on E-122A and E-205A.
24. Contractor shall seal all wall penetrations with conduit within the dehumidified area using a rubber pipeseal that will expand to fill the gap between the penetration sleeve and conduit to create a seal. Caulking (silicone caulk) shall not be used at these locations.

ELECTRICAL NOTES AND ABBREVIATIONS

E-8

DATE	REVISED BY	DATE	REVISED BY
08/02	AB	09/02	JW
3/04	IAH		

CALCULATED/DESIGNED BY — CHECKED BY

DESIGN OVERSIGHT — BEHZAD GOLEMOHAMMADI

STATE OF CALIFORNIA - DEPARTMENT OF TRANSPORTATION — Caltrans

DATE PLOTTED => 11/9/2011
TIME PLOTTED => 5:34:51 PM

00-00-00

FOR REDUCED PLANS ORIGINAL 0 20 40 60 80
SCALE IS IN MILLIMETERS

DGN FILE =>04-0120f1_0093R10.dgn
USERNAME =>llorico

CU 04251 | EA 0120F1

DIST	COUNTY	ROUTE	KILOMETER POST TOTAL PROJECT	SHEET No	TOTAL SHEETS
04	SF	80	13.2/13.9	188 R5	1204

12/19/02
REGISTERED ELECTRICAL ENGINEER DATE

12-6-04
PLANS APPROVAL DATE

REGISTERED PROFESSIONAL ENGINEER JENS ERLINGSSON No. 8249 Exp. 9/30/06 ELECTRICAL STATE OF CALIFORNIA

PB POWER, Inc.
A Parsons Brinckerhoff Company
303 Second St., Suite 700N
San Francisco, CA 94107-1317

The State of California or its officers or agents shall not be responsible for the accuracy or completeness of electronic copies of this plan sheet.

Caltrans now has a web site! To get to the web site, go to: http://www.dot.ca.gov

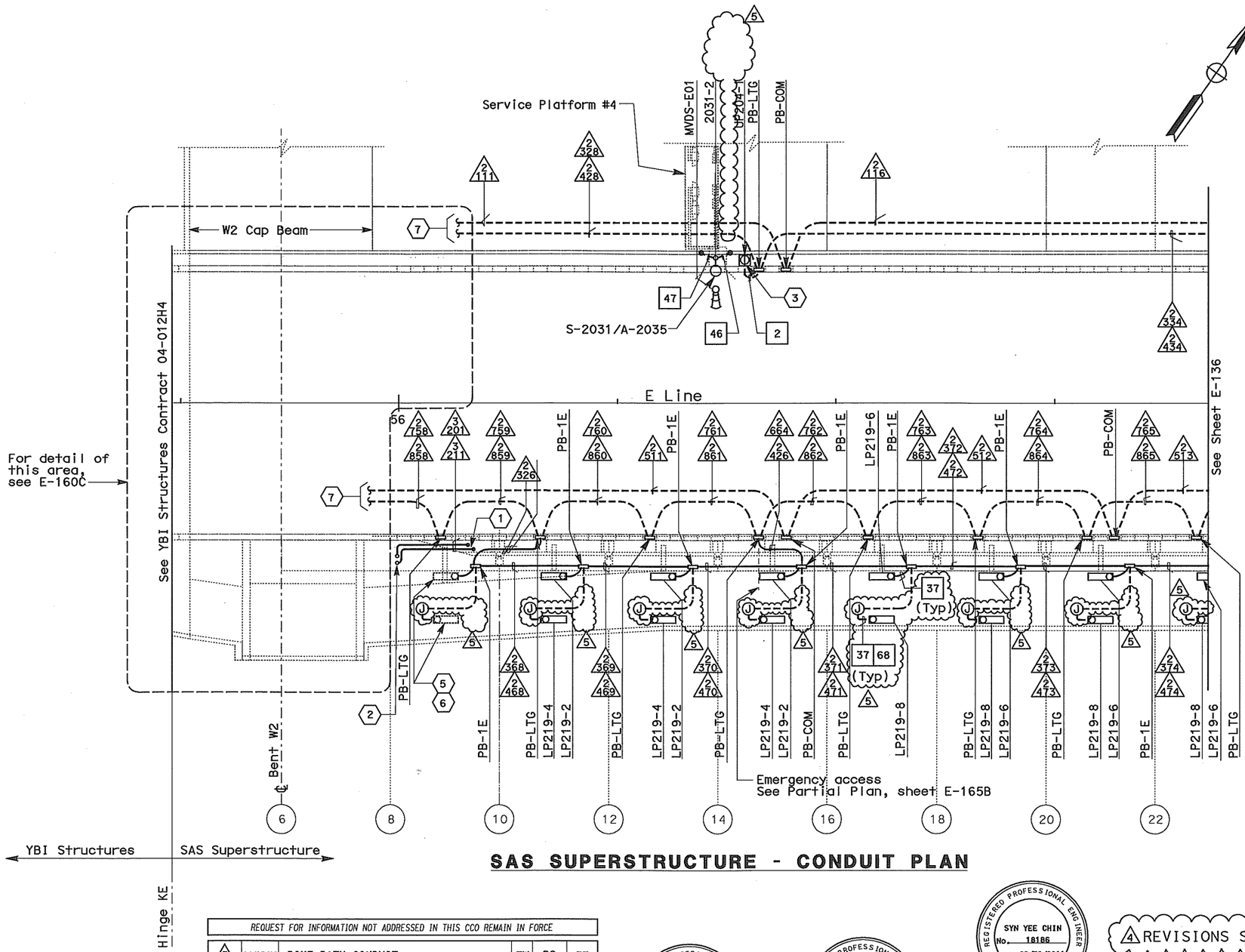

SAS SUPERSTRUCTURE - CONDUIT PLAN

SHEET NOTES:

1. Conduit from barrier pull box or other equipment down into Girder Box, see sheet E-181.
2. For conduit to suspension cable lighting, see sheet E-226.
3. Roadway Barrier Receptacle, see Detail 1, sheet E-162.
4. Deleted.
5. Railing lights are contractor furnished and installed by others.
6. Bike path electrical components west of PP-9 are furnished by contractor and installed by others.
7. See drawing E-160C for continuation of conduits.

NOTES:

1. References:
   - For typical details and locations of conduit connections to light poles, barrier outlet boxes, call boxes, overhead sign lighting, CMS, CCTV and MVDS, see sheets E-160 thru E-162 and E-169.
   - TOS equipment is shown for conduit routing only. For typical details of TOS controller and devices, see sheets E-344 through E-357.
   - For types of pull boxes, splice boxes and enclosures, see sheet E-169.
   - For circuit and conduit/cable tray schedules, see sheets starting at E-401.
2. For Roadway level, Bike Path and Belvedere Lighting Fixture Schedules and wiring diagrams see sheets E-146, E-147 and E-165.
3. For Roadway level and Bike Path Call Box Schedule, see sheet E-397.
4. For number of lighting fixtures (main tower lights) see lighting schedule sheets E-271 and E-272.
5. All conduits and fittings routed exposed between the Bike Path and the roadway shall be galvanized rigid steel, PVC coated.
6. See sheets E-160 thru E-165 for conduit locations.
7. For Belvedere Lighting Fixture installation, see sheet E-173.

REQUEST FOR INFORMATION NOT ADDRESSED IN THIS CCO REMAIN IN FORCE

MARK	DATE	DESCRIPTIONS	BY	CH'D	CCO#
5	04/15/11	BIKE PATH CONDUIT	TW	RG	73
4	06/11/10	BIKE PATH CONDUIT	TW	RG	73
3	06/25/09	WEST END BARRIER CONDUIT	RG	FW	44S1
2	12/15/08	BIKE PATH DETAILS	TW	RG FW	99
1	02/19/08	ELECTRICAL MODIFICATIONS	MP EL	RR	42

REVISIONS

CONTRACT CHANGE ORDER NO. 73
SHEET 4 OF 52

REGISTERED PROFESSIONAL ENGINEER MAXWELL FUMIO TAKATA No. E 8651 Exp. 9/30/2008 ELECTRICAL STATE OF CALIFORNIA
FOR REVISION ONLY 1

REGISTERED PROFESSIONAL ENGINEER FADI WALIEDDINE No. 11465 Exp. 12/31/2009 ELECTRICAL STATE OF CALIFORNIA
FOR REVISION ONLY 2 3

REGISTERED PROFESSIONAL ENGINEER SYN YEE CHIN No. 18186 Exp. 09/30/2011 ELECTRICAL STATE OF CALIFORNIA
Syn Yee Chin
FOR REVISION ONLY 4 5

4 REVISIONS SUPERCEDED 5

SAS SUPERSTRUCTURE ROADWAY EASTBOUND
LIGHTING AND ELECTRICAL SYSTEMS

SCALE 1:200

E-135

THIS PLAN ACCURATE FOR ELECTRICAL WORK ONLY.

ALL DIMENSIONS ARE IN METERS UNLESS OTHERWISE SHOWN.

FOR REDUCED PLANS ORIGINAL SCALE IS IN MILLIMETERS 0 20 40 60 80

DGN FILE =>04-0120f1_0188R05.dgn
USERNAME =>llorico

CU 04251 | EA 0120F1

DATE PLOTTED => 15-APR-2011
TIME PLOTTED => 13:20

LAST REVISION 00-00-00

STATE OF CALIFORNIA - DEPARTMENT OF TRANSPORTATION
Caltrans

DESIGN OVERSIGHT
BEHZAD GOLEMOHAMMADI

CALCULATED/DESIGNED BY | EDC | DATE 08/02 | REVISED BY
CHECKED BY | CYF | 08/02 | DATE REVISED

DIST	COUNTY	ROUTE	KILOMETER POST TOTAL PROJECT	SHEET No.	TOTAL SHEETS
04	SF	80	13.2/13.9	189 R6	1204

12/19/02
REGISTERED ELECTRICAL ENGINEER DATE

12-6-04
PLANS APPROVAL DATE

REGISTERED PROFESSIONAL ENGINEER JENS ERLINGSSON No. 8249 Exp. 9/30/06 ELECTRICAL STATE OF CALIFORNIA

PB POWER, Inc.
A Parsons Brinckerhoff Company
303 Second St., Suite 700N
San Francisco, CA 94107-1317

The State of California or its officers or agents shall not be responsible for the accuracy or completeness of electronic copies of this plan sheet.

Caltrans now has a web site! To get to the web site, go to: http://www.dot.ca.gov

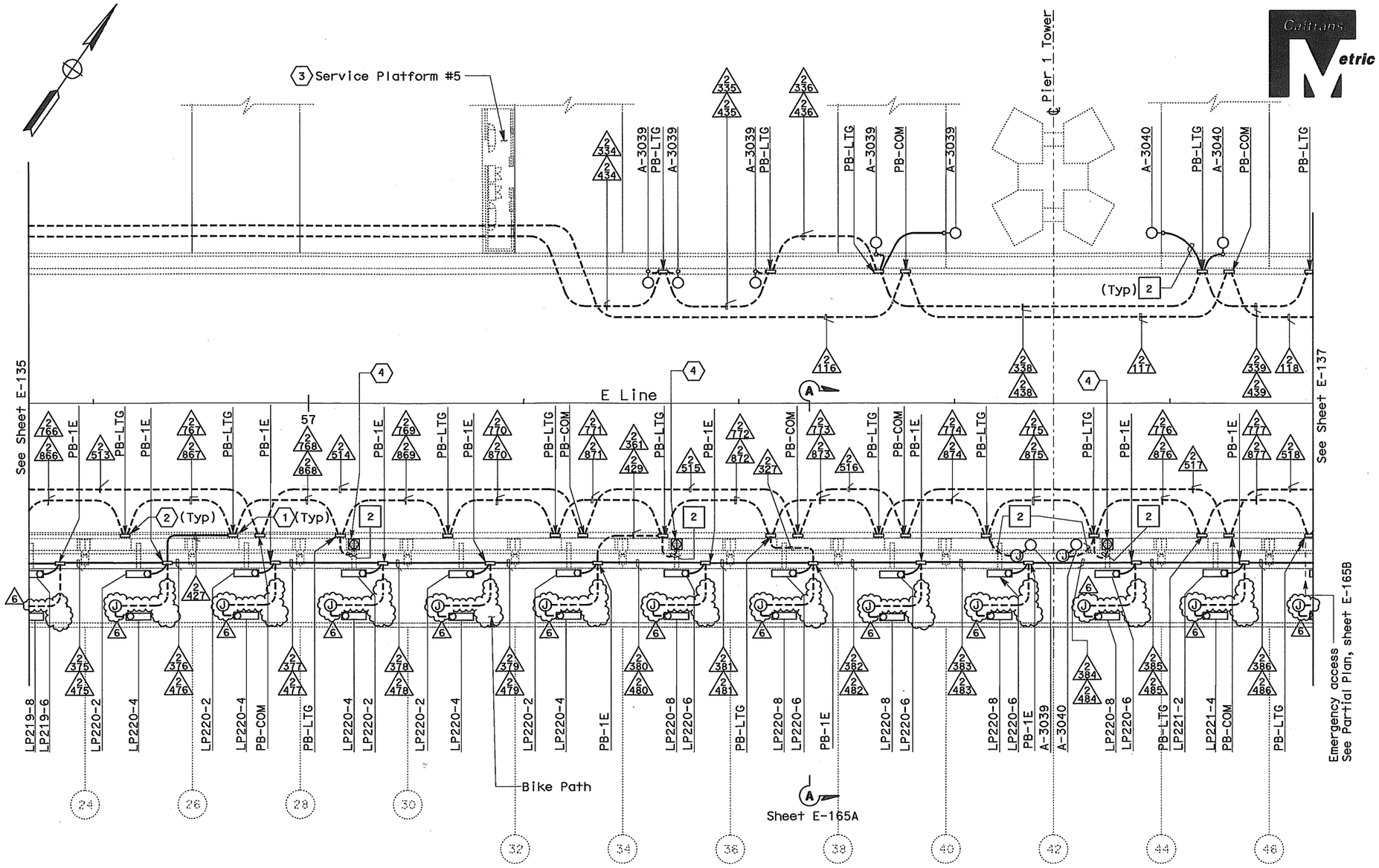

SHEET NOTES:

1. Conduit from barrier pullbox or other equipment down into Girder Box, see sheet E-182.
2. For conduit to tower and suspension cable lighting see sheet E-227.
3. Contractor shall furnish and install UP-205 and LP-220 per sheet E-72. For complete scope of work on platform and other related work not shown on this sheet, see Electrical Special Provisions.
4. Roadway Barrier Receptacle, see Detail 1, sheet E-162.

NOTES:

1. References:
   - For typical details and locations of conduit connections to light poles, barrier outlet boxes, call boxes, overhead sign lighting, CMS, CCTV and MVDS, see sheets E-160 thru E-162 and E-169.
   - TOS equipment is shown for conduit routing only. For typical details of TOS controller and devices, see sheets E-344 through E-357.
   - For types of pull boxes, splice boxes and enclosures, see sheet E-169.
   - For circuit and conduit/cable tray schedules, see sheets starting at E-401.
2. For Roadway Level Call Boxes, refer to sheet E-396.
3. For Roadway level, Bike Path and Belvedere Lighting Fixture Schedules, see sheets E-146, E-147 and E-165.
4. For Roadway level and Bike Path Call Box Schedule, see sheet E-397.
5. For number of lighting fixtures (main tower lights) see lighting schedule sheets E-271 and E-272.
6. All conduits and fittings routed exposed between the Bike Path and the roadway shall be galvanized rigid steel, PVC coated.
7. See sheets E-160 thru E-165 for conduit locations.

SAS SUPERSTRUCTURE CONDUIT - PLAN

REVISIONS SUPERCEDED 6

REQUEST FOR INFORMATION NOT ADDRESSED IN THIS CCO REMAIN IN FORCE

MARK	DATE	DESCRIPTIONS	BY	CH'D	CCO#
6	04/15/11	BIKE PATH CONDUIT	TW	RG	73
5	06/11/10	BIKE PATH CONDUIT	TW	RG	73
4	10/01/08	LIGHTING REVISIONS	RY AG	RG FW	43
3	12/15/08	BIKE PATH PLATFORM EMERGENCY ACCESS	TW	RG FW	99
2	03/04/08	BARRIER MODIFICATIONS	JS BM	RG SE	44
1	02/19/08	ELECTRICAL MODIFICATIONS	MP EL	RR	42

REVISIONS

CONTRACT CHANGE ORDER NO. 73
SHEET 5 OF 52

REGISTERED PROFESSIONAL ENGINEER MARCELL FUMIO TAKAKI No. E 8651 Exp. 9/30/2008 ELECTRICAL STATE OF CALIFORNIA
FOR REVISION ONLY 1

REGISTERED PROFESSIONAL ENGINEER S. A. ESTOQUE, JR. No. E-10151 Exp. 12/31/2008 ELECTRICAL STATE OF CALIFORNIA
FOR REVISION ONLY 2

REGISTERED PROFESSIONAL ENGINEER FADI WALIEDDINE No. 11465 Exp. 12/31/2009 ELECTRICAL STATE OF CALIFORNIA
FOR REVISION ONLY 3 4

REGISTERED PROFESSIONAL ENGINEER SYN YEE CHIN No. 18186 Exp. 09/30/2011 ELECTRICAL STATE OF CALIFORNIA
FOR REVISION ONLY 5 6

SAS SUPERSTRUCTURE ROADWAY EASTBOUND
LIGHTING AND ELECTRICAL SYSTEMS
SCALE 1:200

E-136

THIS PLAN ACCURATE FOR ELECTRICAL WORK ONLY

ALL DIMENSIONS ARE IN METERS UNLESS OTHERWISE SHOWN

FOR REDUCED PLANS ORIGINAL SCALE IS IN MILLIMETERS 0 20 40 60 80

DGN FILE =>04-0120f1_0189R06.dgn
USERNAME =>llorico

CU 04251 | EA 0120F1

STATE OF CALIFORNIA - DEPARTMENT OF TRANSPORTATION
Caltrans

DESIGN OVERSIGHT: BEHZAD GOLEMOHAMMADI
CALCULATED/DESIGNED BY | CHECKED BY | EDC | CYF | DATE 08/02 | 08/02 | REVISED BY | DATE REVISED

LAST REVISION 00-00-00 | DATE PLOTTED => 18-APR-2011 | TIME PLOTTED => 08:43

DIST	COUNTY	ROUTE	KILOMETER POST TOTAL PROJECT	SHEET No	TOTAL SHEETS
04	SF	80	13.2/13.9	190R4	1204

REGISTERED ELECTRICAL ENGINEER 12/19/02 DATE

12-6-04
PLANS APPROVAL DATE

REGISTERED PROFESSIONAL ENGINEER JENS ERLINGSSON No. 8249 Exp. 9/30/06 ELECTRICAL STATE OF CALIFORNIA

PB POWER, Inc.
A Parsons Brinckerhoff Company
303 Second St., Suite 700N
San Francisco, CA 94107-1317

The State of California or its officers or agents shall not be responsible for the accuracy or completeness of electronic copies of this plan sheet.

Caltrans now has a web site! To get to the web site, go to: http://www.dot.ca.gov

Caltrans Metric

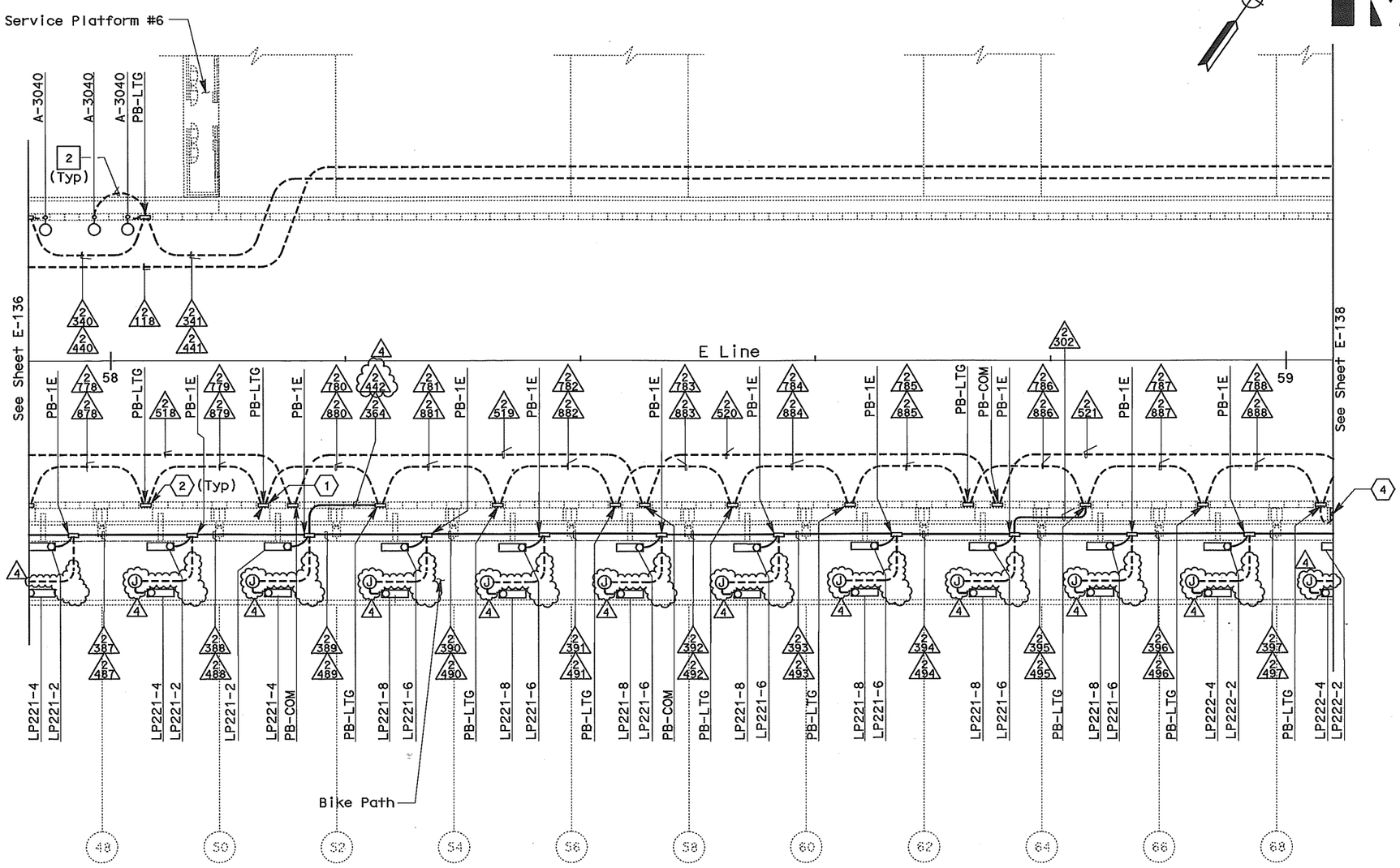

SAS SUPERSTRUCTURE - CONDUIT PLAN

3 REVISIONS SUPERCEDED 4

SHEET NOTES:

1. Conduit from barrier pullbox or other equipment down into Girder Box, see sheet E-183.
2. For conduit to tower and suspension cable lighting see sheet E-228.
3. Contractor shall furnish and install UP-206 and LP-221 per sheet E-73. For complete scope of work on platform and other related work not shown on this sheet, see Electrical Special Provisions.
4. Roadway Barrier Receptacle, see Detail 1, sheet E-162.

NOTES:

1. References:
   - For typical details and locations of conduit connections to light poles, barrier outlet boxes, call boxes, overhead sign lighting, CMS, CCTV and MVDS, see sheets E-160 thru E-162 and E-169.
   - TOS equipment is shown for conduit routing only. For typical details of TOS controller and devices, see sheets E-344 through E-357.
   - For types of pull boxes, splice boxes and enclosures, see sheet E-169.
   - For circuit and conduit/cable tray schedules, see sheets starting at E-401.
2. For Roadway Level Call Boxes, refer to sheet E-396.
3. For Roadway level, Bike Path and Belvedere Lighting Fixture Schedules, see sheets E-146, E-147 and E-165.
4. For Roadway level and Bike Path Call Box Schedule, see sheet E-397.
5. For number of lighting fixtures (main tower lights) see lighting schedule sheets E-271 and E-272.
6. All conduits and fittings routed exposed between the Bike Path and the roadway shall be galvanized rigid steel, PVC coated.
7. See sheets E-160 thru E-165 for conduit locations.

REQUEST FOR INFORMATION NOT ADDRESSED IN THIS CCO REMAIN IN FORCE

MARK	DATE	DESCRIPTIONS	BY	CH'D	CCO#
		REVISIONS			
4	04/15/11	BIKE PATH CONDUIT	TW	RG	73
3	06/11/10	BIKE PATH CONDUIT	TW	RG	73
2	03/04/08	BARRIER MODIFICATIONS	TW	RG	44
1	02/19/08	ELECTRICAL MODIFICATIONS	MP EL	RR	42

CONTRACT CHANGE ORDER NO. 73
SHEET 6 OF 52

THIS PLAN ACCURATE FOR ELECTRICAL WORK ONLY.

REGISTERED PROFESSIONAL ENGINEER MANUELL FUMIO TAKAKI No. E 8651 Exp. 9/30/2008 ELECTRICAL STATE OF CALIFORNIA
FOR REVISION ONLY 1

REGISTERED PROFESSIONAL ENGINEER FADI WALIEDDINE No. 11465 Exp. 12/31/2009 ELECTRICAL STATE OF CALIFORNIA
FOR REVISION ONLY 2

REGISTERED PROFESSIONAL ENGINEER SYN YEE CHIN No. 18186 Exp. 09/30/2011 ELECTRICAL STATE OF CALIFORNIA
FOR REVISION ONLY 3 4

SAS SUPERSTRUCTURE ROADWAY EASTBOUND
LIGHTING AND ELECTRICAL SYSTEMS
SCALE 1:200

E-137

STATE OF CALIFORNIA - DEPARTMENT OF TRANSPORTATION
Caltrans

DESIGN OVERSIGHT: BEHZAD GOLEMOHAMMADI

CALCULATED/DESIGNED BY	EDC	DATE 08/02	REVISED BY
CHECKED BY	CYF	08/02	DATE REVISED

LAST REVISION 00-00-00 | DATE PLOTTED => 15-APR-2011 | TIME PLOTTED => 13:20

ALL DIMENSIONS ARE IN METERS UNLESS OTHERWISE SHOWN

FOR REDUCED PLANS ORIGINAL SCALE IS IN MILLIMETERS 0 20 40 60 80

DGN FILE =>04-0120f1_0190R04.dgn
USERNAME =>llorico

CU 04251 | EA 0120F1

DIST	COUNTY	ROUTE	KILOMETER POST TOTAL PROJECT	SHEET No	TOTAL SHEETS
04	SF	80	13.2/13.9	191R4	1204

REGISTERED ELECTRICAL ENGINEER 12/19/02 DATE

12-6-04
PLANS APPROVAL DATE

REGISTERED PROFESSIONAL ENGINEER JENS ERLINGSSON No. 8249 Exp. 9/30/06 ELECTRICAL STATE OF CALIFORNIA

PB POWER, Inc.
A Parsons Brinckerhoff Company
303 Second St., Suite 700N
San Francisco, CA 94107-1317

The State of California or its officers or agents shall not be responsible for the accuracy or completeness of electronic copies of this plan sheet.

Caltrans now has a web site! To get to the web site, go to: http://www.dot.ca.gov

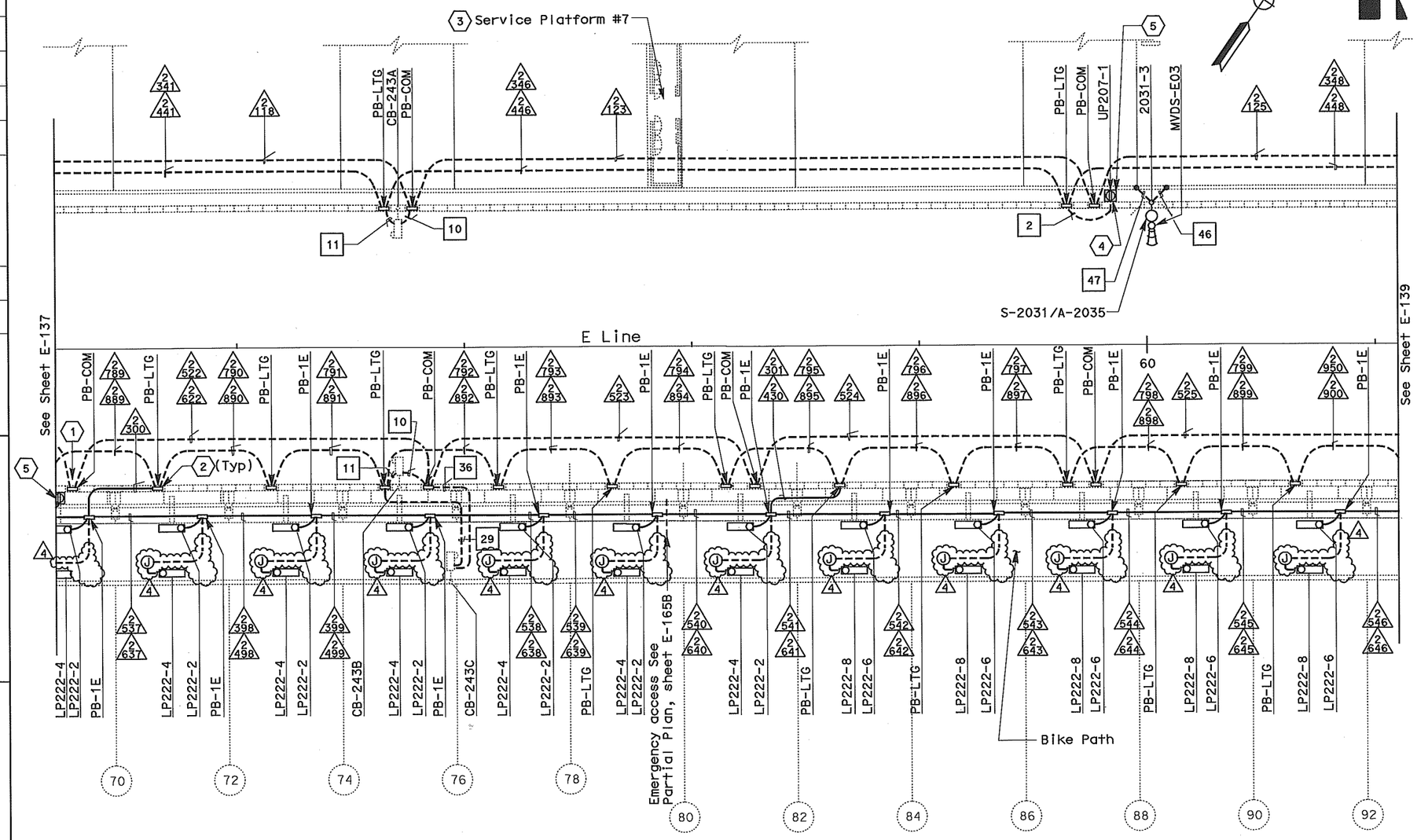

SHEET NOTES:

1. Conduit from barrier pullbox or other equipment down into Girder Box, see sheet E-184.
2. For conduit to tower and suspension cable lighting, see sheet E-229.
3. Contractor shall furnish and install UP-207 and LP-222 per sheet E-74. For complete scope of work on platform and other related work not shown on this sheet, see Electrical Special Provisions.
4. Conduit down to girder for MVDS, see sheet E-184.
5. Roadway Barrier Receptacle, see Detail 1, sheet E-162.

NOTES:

1. References:
   - For typical details and locations of conduit connections to light poles, barrier outlet boxes, call boxes, overhead sign lighting, CMS, CCTV and MVDS, see sheets E-160 thru E-162 and E-169.
   - TOS equipment is shown for conduit routing only. For typical details of TOS controller and devices, see sheets E-344 through E-357.
   - For types of pull boxes, splice boxes and enclosures, see sheet E-169.
   - For circuit and conduit/cable tray schedules, see sheets starting at E-401.
2. For Roadway Level Call Boxes, refer to sheet E-396.
3. For Roadway level, Bike Path and Belvedere Lighting Fixture Schedules, see sheets E-146, E-147 and E-165.
4. For Roadway level and Bike Path Call Box Schedule, see sheet E-397.
5. For number of lighting fixtures (main tower lights) see lighting schedule sheets E-271 and E-272.
6. All conduits and fittings routed exposed between the Bike Path and the roadway shall be galvanized rigid steel, PVC coated.
7. See sheets E-160 thru E-165 for conduit locations.

3 REVISIONS SUPERCEDED 4

SAS SUPERSTRUCTURE - CONDUIT PLAN

REQUEST FOR INFORMATION NOT ADDRESSED IN THIS CCO REMAIN IN FORCE

MARK	DATE	DESCRIPTIONS	BY	CH'D	CCO#
4	04/15/11	BIKE PATH CONDUIT	TW	RG	73
3	06/11/10	BIKE PATH CONDUIT	TW	RG	73
2	12/15/08	BIKE PATH DETAILS	TW	RG FW	99
1	02/19/08	ELECTRICAL MODIFICATIONS	MP EL	RR	42

REVISIONS

REGISTERED PROFESSIONAL ENGINEER MAXWELL FUMIO TAKAKI No. E 8651 Exp. 9/30/2008 ELECTRICAL STATE OF CALIFORNIA
FOR REVISION ONLY 1

REGISTERED PROFESSIONAL ENGINEER FADI WALIEDDINE No. 11465 Exp. 12/31/2009 ELECTRICAL STATE OF CALIFORNIA
FOR REVISION ONLY 2

REGISTERED PROFESSIONAL ENGINEER SYN YEE CHIN No. 18186 Exp. 09/30/2011 ELECTRICAL STATE OF CALIFORNIA
FOR REVISION ONLY 3 4

CONTRACT CHANGE ORDER NO. 73
SHEET 7 OF 52

THIS PLAN ACCURATE FOR ELECTRICAL WORK ONLY.

SAS SUPERSTRUCTURE ROADWAY EASTBOUND
LIGHTING AND ELECTRICAL SYSTEMS

SCALE 1:200

E-138

ALL DIMENSIONS ARE IN METERS UNLESS OTHERWISE SHOWN

FOR REDUCED PLANS ORIGINAL SCALE IS IN MILLIMETERS 0 20 40 60 80

DGN FILE =>04-0120f1_0191R04.dgn
USERNAME =>llorico

CU 04251 | EA 0120F1

DATE PLOTTED => 18-APR-2011
TIME PLOTTED => 08:40

LAST REVISION 00-00-00

STATE OF CALIFORNIA - DEPARTMENT OF TRANSPORTATION
Caltrans

DESIGN OVERSIGHT
BEHZAD GOLEMOHAMMADI

CALCULATED/DESIGNED BY EDC DATE 08/02 REVISED BY
CHECKED BY CYF 08/02 DATE REVISED

DIST	COUNTY	ROUTE	KILOMETER POST TOTAL PROJECT	SHEET No	TOTAL SHEETS
04	SF	80	13.2/13.9	192 R6	1204

REGISTERED ELECTRICAL ENGINEER 12/19/02 DATE

12-6-04
PLANS APPROVAL DATE

REGISTERED PROFESSIONAL ENGINEER JENS ERLINGSSON No. 8249 Exp. 9/30/06 ELECTRICAL STATE OF CALIFORNIA

PB POWER, Inc.
A Parsons Brinckerhoff Company
303 Second St., Suite 700N
San Francisco, CA 94107-1317

The State of California or its officers or agents shall not be responsible for the accuracy or completeness of electronic copies of this plan sheet.

Caltrans now has a web site! To get to the web site, go to http://www.dot.ca.gov

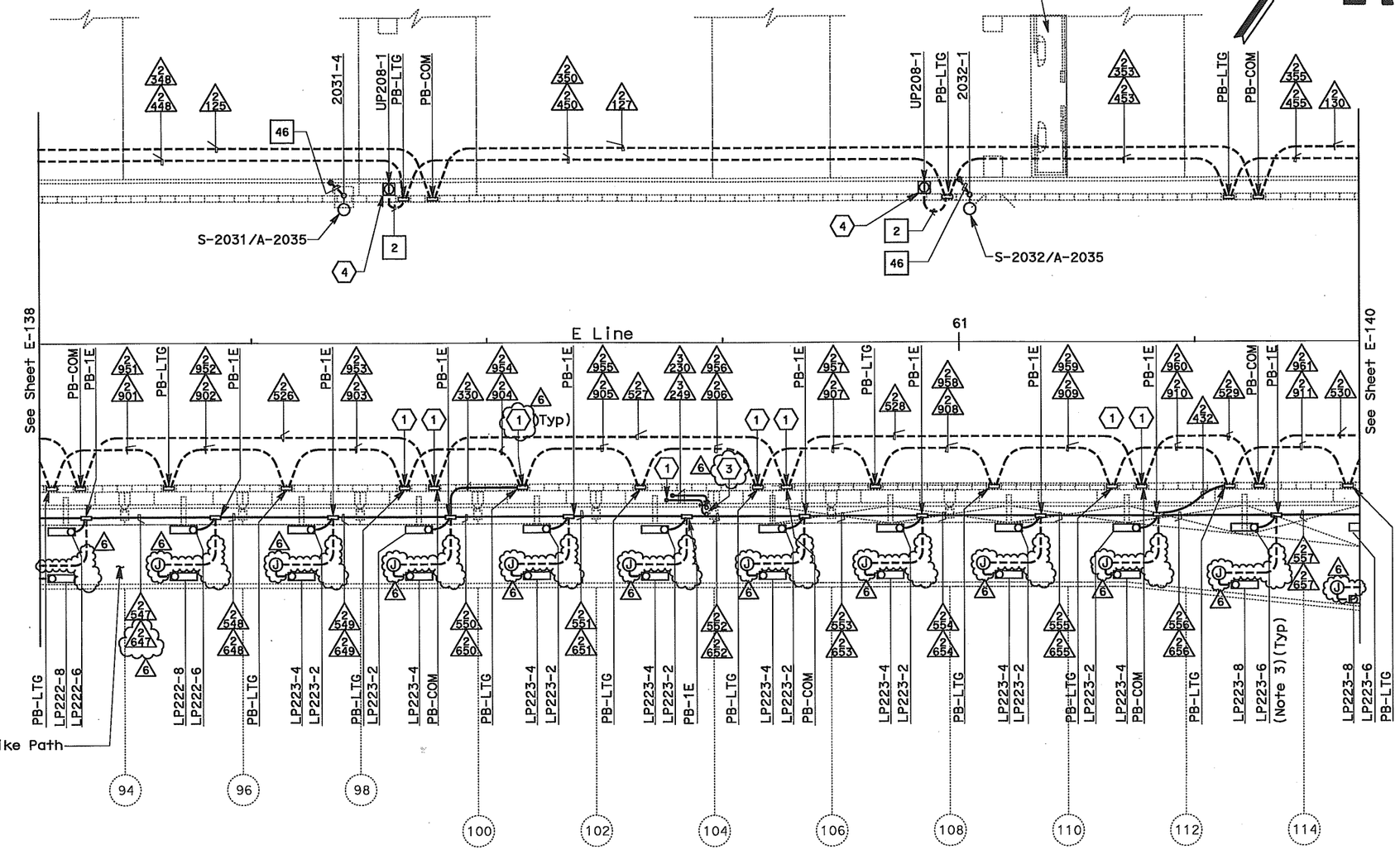

SAS SUPERSTRUCTURE - CONDUIT PLAN

SHEET NOTES:

1. Conduit from barrier pullbox or other equipment down into Girder Box, see sheet E-185.
2. Contractor shall furnish and install UP-208 and LP-223 per sheet E-75. For complete scope of work on platform and other related work not shown on this sheet, see Electrical Special Provisions.
3. For conduit to tower and suspension cable lighting, see sheet E-230.
4. Roadway Barrier Receptacle, see Detail 1, sheet E-162.

NOTES:

1. References:
   - For typical details and locations of conduit connections to light poles, barrier outlet boxes, call boxes, overhead sign lighting, CMS, CCTV and MVDS, see sheets E-160 thru E-162 and E-169.
   - TOS equipment is shown for conduit routing only. For typical details of TOS controller and devices, see sheets E-344 through E-357.
   - For types of pull boxes, splice boxes and enclosures, see sheet E-169.
   - For circuit and conduit/cable tray schedules, see sheets starting at E-401.
2. For Roadway Level Call Boxes, refer to sheet E-396.
3. For Roadway level, Bike Path and Belvedere Lighting Fixture Schedules, see sheets E-146, E-147 and E-165.
4. For Roadway level and Bike Path Call Box Schedule, see sheet E-397.
5. For number of lighting fixtures (main tower lights) see lighting schedule sheets E-271 and E-272.
6. All conduits and fittings routed exposed between the Bike Path and the roadway shall be rigid galvanized steel, PVC coated.
7. See sheets E-160 thru E-165 for conduit locations.

REQUEST FOR INFORMATION NOT ADDRESSED IN THIS CCO REMAIN IN FORCE

MARK	DATE	DESCRIPTIONS	BY	CH'D	CCO#
6	04/15/11	BIKE PATH CONDUIT	TW	RG	73
5	06/11/10	BIKE PATH CONDUIT	TW	RG	73
4	01/08/09	BIKE PATH DETAILS	TW	RG FW	99
3	12/15/08	BIKE PATH DETAILS	TW	RG FW	99
2	03/04/08	BARRIER MODIFICATIONS	JS BM	RG SE	44
1	02/19/08	ELECTRICAL MODIFICATIONS	MP EL	RR	42

REVISIONS

CONTRACT CHANGE ORDER NO. 73
SHEET 8 OF 52

THIS PLAN ACCURATE FOR ELECTRICAL WORK ONLY.

REGISTERED PROFESSIONAL ENGINEER MANDELL FUMIO TAKAKI No. E 8651 Exp. 9/30/2008 ELECTRICAL STATE OF CALIFORNIA
FOR REVISION ONLY 1

REGISTERED PROFESSIONAL ENGINEER S. A. ESTOQUE, JR. No. E-10151 Exp. 12/31/2009 ELECTRICAL STATE OF CALIFORNIA
FOR REVISION ONLY 2

REGISTERED PROFESSIONAL ENGINEER FADI WALIEDDINE No. 11465 Exp. 12/31/2009 ELECTRICAL STATE OF CALIFORNIA
FOR REVISION ONLY 3 4

REGISTERED PROFESSIONAL ENGINEER SYN YEE CHIN No. 18186 Exp. 09/30/2011 ELECTRICAL STATE OF CALIFORNIA
FOR REVISION ONLY 5 6

5 REVISIONS SUPERCEDED 6

SAS SUPERSTRUCTURE ROADWAY EASTBOUND
LIGHTING AND ELECTRICAL SYSTEMS
SCALE 1:200

E-139

STATE OF CALIFORNIA - DEPARTMENT OF TRANSPORTATION
DESIGN OVERSIGHT: BEHZAD GOLEMOHAMMADI
CALCULATED/DESIGNED BY: EDC — DATE 08/02 — REVISED BY
CHECKED BY: CYF — 08/02 — DATE REVISED

FOR REDUCED PLANS ORIGINAL SCALE IS IN MILLIMETERS 0 20 40 60 80

DGN FILE =>04-0120f1_0192R06.dgn
USERNAME =>llorico

CU 04251 | EA 0120F1

LAST REVISION 00-00-00 | DATE PLOTTED => 21-APR-2011 | TIME PLOTTED => 09:16

DIST	COUNTY	ROUTE	KILOMETER POST TOTAL PROJECT	SHEET No	TOTAL SHEETS
04	SF	80	13.2/13.9	193R4	1204

REGISTERED ELECTRICAL ENGINEER 12/19/02 DATE

12-6-04
PLANS APPROVAL DATE

REGISTERED PROFESSIONAL ENGINEER JENS ERLINGSSON No. 8249 Exp. 9/30/06 ELECTRICAL STATE OF CALIFORNIA

PB POWER, Inc.
A Parsons Brinckerhoff Company
303 Second St., Suite 700N
San Francisco, CA 94107-1317

The State of California or its officers or agents shall not be responsible for the accuracy or completeness of electronic copies of this plan sheet.

Caltrans now has a web site! To get to the web site, go to http://www.dot.ca.gov

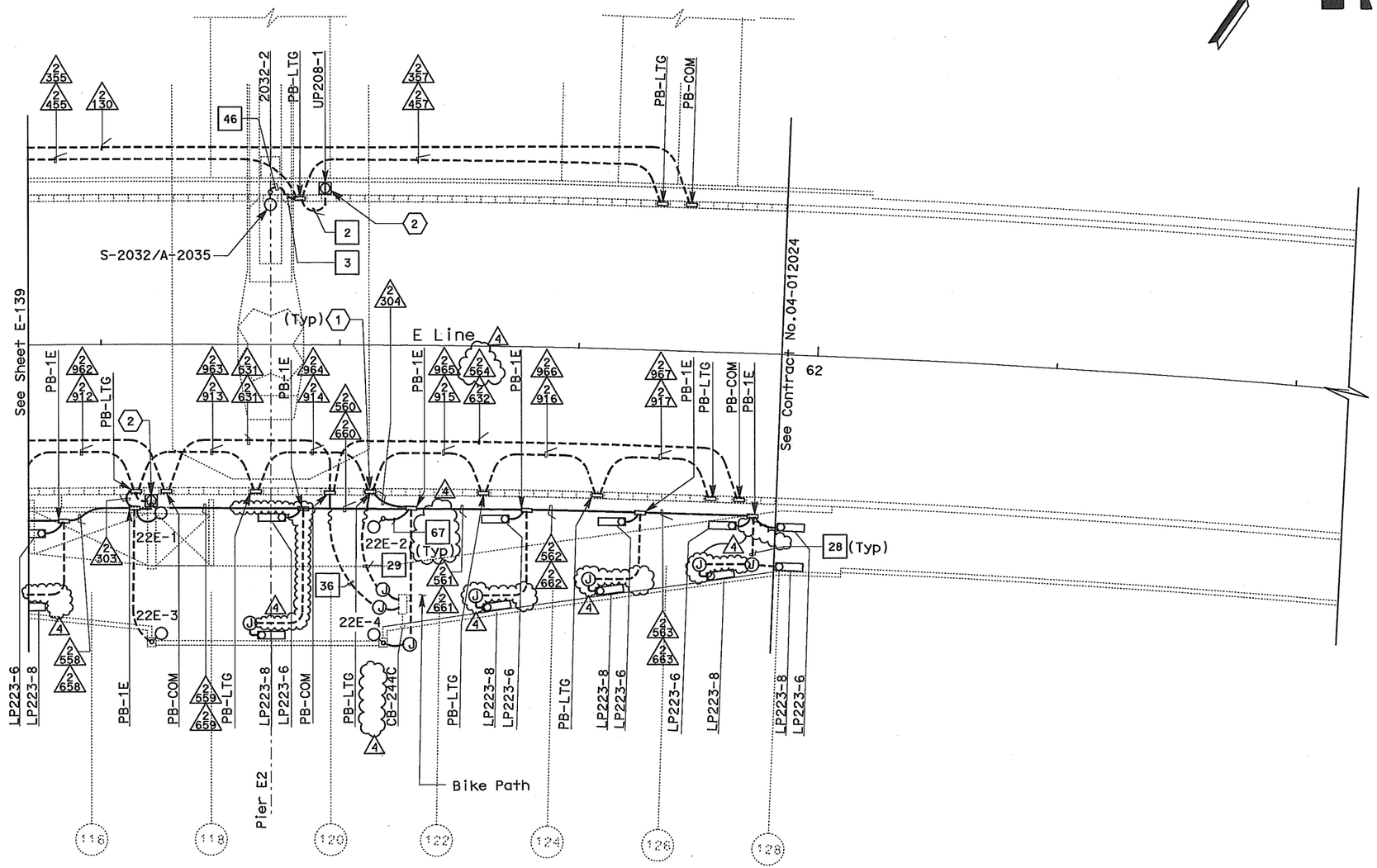

SAS SUPERSTRUCTURE - CONDUIT PLAN

SHEET NOTES:

1. For conduit to tower and suspension cable lighting, see sheet E-230.
2. Roadway Barrier Receptacle, see Detail 1, sheet E-162.

NOTES:

1. References:
   - For typical details and locations of conduit connections to light poles, barrier outlet boxes, call boxes, overhead sign lighting, CMS, CCTV and MVDS, see sheets E-160 thru E-162 and E-169.
   - TOS equipment is shown for conduit routing only. For typical details of TOS controller and devices, see sheets E-344 through E-357.
   - For types of pull boxes, splice boxes and enclosures, see sheet E-169.
   - For circuit and conduit/cable tray schedules, see sheets starting at E-401.
2. For Roadway Level Call Boxes, refer to sheet E-396.
3. For Roadway level, Bike Path and Belvedere Lighting Fixture Schedules, see sheets E-146, E-147 and E-165.
4. For Roadway level and Bike Path Call Box Schedule, see sheet E-397.
5. For number of lighting fixtures (main tower lights) see lighting schedule sheets E-271 and E-272.
6. All conduits and fittings routed exposed between the Bike Path and the roadway shall be galvanized rigid steel, PVC coated.
7. See sheets E-160 thru E-165 for conduit locations.
8. For Belvedere lighting fixture installation, see sheet E-173.

REQUEST FOR INFORMATION NOT ADDRESSED IN THIS CCO REMAIN IN FORCE

MARK	DATE	DESCRIPTIONS	BY	CH'D	CCO#
4	04/15/11	BIKE PATH CONDUIT	TW	RG	73
3	06/11/10	BIKE PATH CONDUIT	TW	RG	73
2	03/04/08	BARRIER MODIFICATIONS	TW	RG	44
1	02/19/08	ELECTRICAL MODIFICATIONS	MP EL	RR	42

REVISIONS

CONTRACT CHANGE ORDER NO. 73
SHEET 9 OF 52

THIS PLAN ACCURATE FOR ELECTRICAL WORK ONLY.

REGISTERED PROFESSIONAL ENGINEER MARNELL FUMIO TAKAKI No. E 8651 Exp. 9/30/2008 ELECTRICAL STATE OF CALIFORNIA
FOR REVISION ONLY 1

REGISTERED PROFESSIONAL ENGINEER FADI WALIEDDINE No. 11465 Exp. 12/31/2009 ELECTRICAL STATE OF CALIFORNIA
FOR REVISION ONLY 2

REGISTERED PROFESSIONAL ENGINEER SYN YEE CHIN No. 18186 Exp. 09/30/2011 ELECTRICAL STATE OF CALIFORNIA
FOR REVISION ONLY 3 4

3 REVISIONS SUPERCEDED 4

SAS SUPERSTRUCTURE ROADWAY EASTBOUND
LIGHTING AND ELECTRICAL SYSTEMS

SCALE 1:200

E-140

ALL DIMENSIONS ARE IN METERS UNLESS OTHERWISE SHOWN

FOR REDUCED PLANS ORIGINAL SCALE IS IN MILLIMETERS 0 20 40 60 80

DGN FILE =>04-0120f1_0193R04.dgn
USERNAME =>llorico

CU 04251 | EA 0120F1

STATE OF CALIFORNIA - DEPARTMENT OF TRANSPORTATION
Caltrans

DESIGN OVERSIGHT: BEHZAD GOLEMOHAMMADI

CALCULATED/DESIGNED BY | CHECKED BY | EDC | CYF | DATE 08/02 | 08/02 | REVISED BY | DATE REVISED

LAST REVISION 00-00-00 | DATE PLOTTED => 15-APR-2011 | TIME PLOTTED => 13:21

DIST	COUNTY	ROUTE	KILOMETER POST TOTAL PROJECT	SHEET No	TOTAL SHEETS
04	SF	80	13.2/13.9	197 R5	1204

REGISTERED ELECTRICAL ENGINEER 12/19/02 DATE

12-6-04
PLANS APPROVAL DATE

REGISTERED PROFESSIONAL ENGINEER JENS ERLINGSSON No. 8249 Exp. 9/30/06 ELECTRICAL STATE OF CALIFORNIA

PB POWER, Inc.
A Parsons Brinckerhoff Company
303 Second St., Suite 700N
San Francisco, CA 94107-1317

The State of California or its officers or agents shall not be responsible for the accuracy or completeness of electronic copies of this plan sheet.

Caltrans now has a web site! To get to the web site, go to http://www.dot.ca.gov

Caltrans Metric

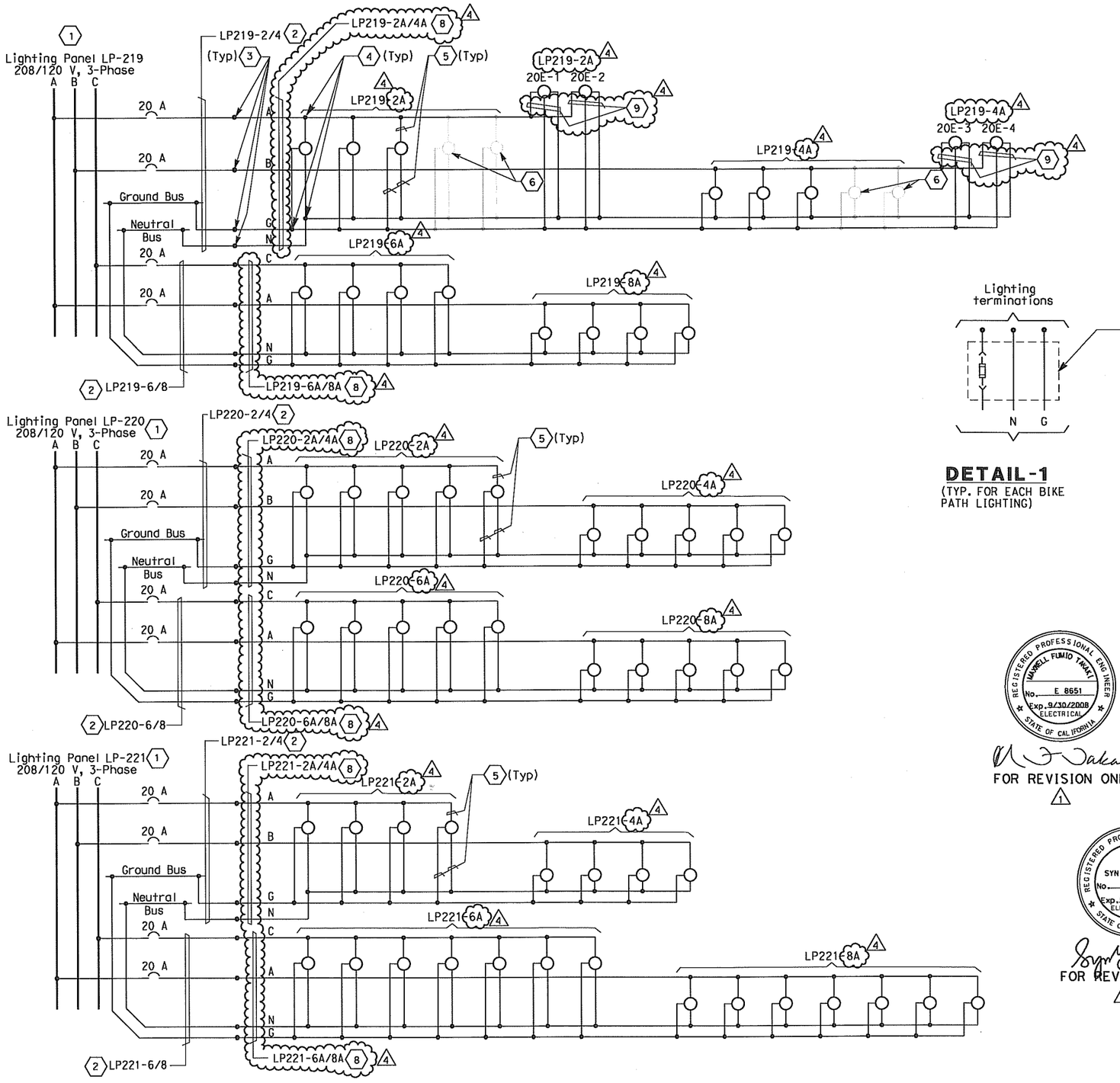

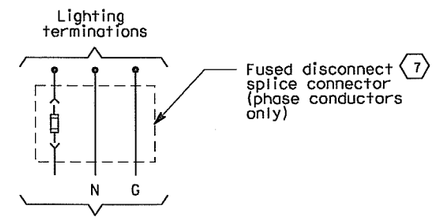

DETAIL-1
(TYP. FOR EACH BIKE PATH LIGHTING)

SHEET NOTES:

1. For lighting panel schedule LP-219, LP-220, LP-221, see sheets E-155 and E-156.
2. Lighting feeder cable is 3/C #6 + G.
3. Conductors spliced inside PB-2A located in Girder 3.
4. Conductors spliced inside PB-1E located at north side of the bike path.
5. 2#12 + #12 G. single conductors. See Detail 1.
6. Railing lights are contractor furnished and installed by others.
7. Install 5A in-line fuse per light fixture, inside the belvedere light pole for 20E-1 through 20E-4. For bike path lights (north/south hand railing) install 5A in-line fuses with heat shrinkable tubing at both leads inside PB-1E located at north side of bike path.
8. Lighting feeder cable is 3#6 + #8 G.
9. 2#10 + #10 G. single conductors. See Detail 1.

NOTE:

1. For circuit and conduit/cable tray schedules, see sheets starting at E-401.

REGISTERED PROFESSIONAL ENGINEER MARRELL FUMIO TAKAKI No. E 8651 Exp. 9/30/2008 ELECTRICAL STATE OF CALIFORNIA

FOR REVISION ONLY
1

REGISTERED PROFESSIONAL ENGINEER FADI WALIEDDINE No. 11465 Exp. 12/31/2009 ELECTRICAL STATE OF CALIFORNIA

FOR REVISION ONLY
2

REGISTERED PROFESSIONAL ENGINEER SYN YEE CHIN No. 18186 Exp. 09/30/2011 ELECTRICAL STATE OF CALIFORNIA

Syn Yee Chin
FOR REVISION ONLY
3 4 5

3 REVISIONS SUPERCEDED 4

REQUEST FOR INFORMATION NOT ADDRESSED IN THIS CCO REMAIN IN FORCE

MARK	DATE	DESCRIPTIONS	BY	CH'D	CCO#
5	11/09/11	BIKE PATH CONDUIT	TW	NK	73
4	04/15/11	BIKE PATH CONDUIT	TW	RG	73
3	06/11/10	BIKE PATH CONDUIT	TW	RG	73
2	10/10/08	LIGHTING REVISIONS	RY AG	RG FW	43
1	02/19/08	ELECTRICAL MODIFICATIONS	MP EL	RR	42

REVISIONS

CONTRACT CHANGE ORDER NO. 73
SHEET 10 OF 52

DETAILS
SAS SUPERSTRUCTURE ROADWAY EASTBOUND
120 V BIKE PATH LIGHTING WIRING DIAGRAMS
NO SCALE

E-146

THIS PLAN ACCURATE FOR ELECTRICAL WORK ONLY.

STATE OF CALIFORNIA - DEPARTMENT OF TRANSPORTATION
Caltrans

DESIGN OVERSIGHT: BEHZAD GOLEMOHAMMADI
CALCULATED/DESIGNED BY: JP
CHECKED BY: BL
DATE 9/01
REVISED BY: 11/01
DATE REVISED

LAST REVISION 00-00-00
DATE PLOTTED => 11/9/2011
TIME PLOTTED => 5:00:50 PM

FOR REDUCED PLANS ORIGINAL SCALE IS IN MILLIMETERS 0 20 40 60 80

DGN FILE =>04-0120f1_0197R05.dgn
USERNAME =>llorico

CU 04251 | EA 0120F1

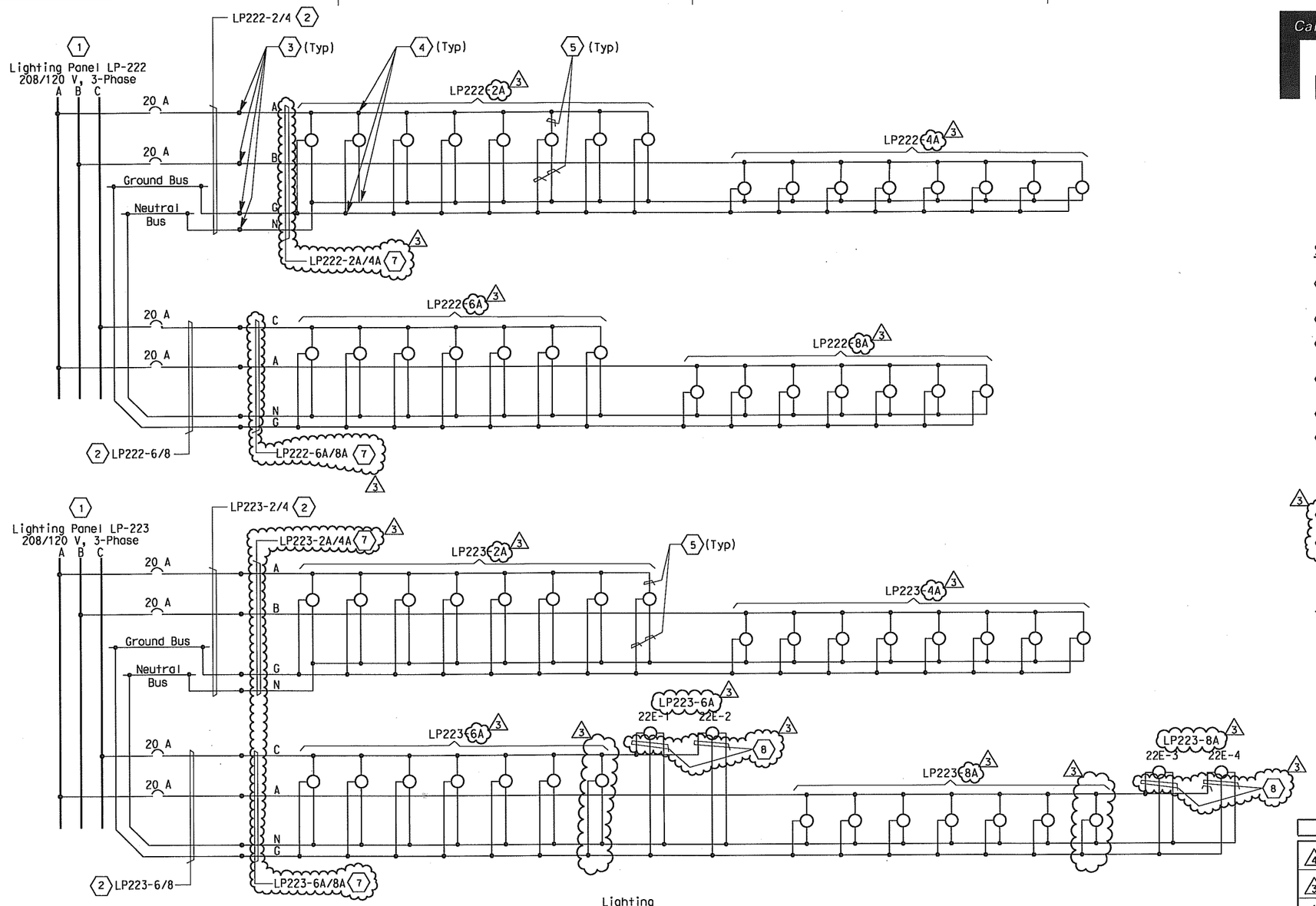

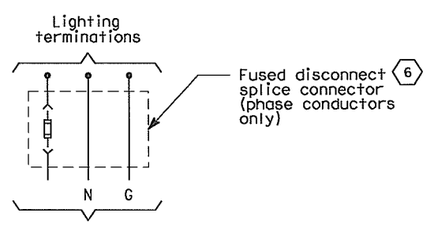

DETAIL-1
(TYP. FOR EACH BIKE PATH LIGHTING)

REGISTERED PROFESSIONAL ENGINEER SYN YEE CHIN No. 18186 Exp. 09/30/2011 ELECTRICAL STATE OF CALIFORNIA

Syn Yee Chin
FOR REVISION ONLY
2 3 4

REGISTERED PROFESSIONAL ENGINEER FADI WALIEDDINE No. 11465 Exp. 12/31/2009 ELECTRICAL STATE OF CALIFORNIA

FOR REVISION ONLY
1

DIST	COUNTY	ROUTE	KILOMETER POST TOTAL PROJECT	SHEET No	TOTAL SHEETS
04	SF	80	13.2/13.9	198 R4	1204

REGISTERED ELECTRICAL ENGINEER 12/19/02 DATE

12-6-04
PLANS APPROVAL DATE

REGISTERED PROFESSIONAL ENGINEER JENS ERLINGSSON No. 8249 Exp. 9/30/06 ELECTRICAL STATE OF CALIFORNIA

PB POWER, Inc.
A Parsons Brinckerhoff Company
303 Second St., Suite 700N
San Francisco, CA 94107-1317

The State of California or its officers or agents shall not be responsible for the accuracy or completeness of electronic copies of this plan sheet.

Caltrans now has a web site! To get to the web site, go to http://www.dot.ca.gov

Caltrans Metric

SHEET NOTES:

1. For lighting panel schedule LP-222, LP-223, see sheet E-157.
2. Lighting feeder cable is 3/C #6 + G.
3. Conductors spliced inside PB-2A located in Girder.
4. Conductors spliced inside PB-1E located at north side of the bike path.
5. 2 #12 + #12 G. single conductors. See Detail 1.
6. Install 5A in-line fuse per light fixture, inside the belvedere light pole junction box for 22E-1 through 22E-4. For bike path lights (north/south hand railing) install 5A in-line fuses with heat shrinkable tubing at both leads inside PB-1E located at north side of bike path.
7. Lighting feeder cable is 3#6 + #8 G.
8. 2#10 + #10 G. single conductors. See Detail 1.

NOTE:

1. For circuit and conduit/cable tray schedules, see sheets starting at E-401.

REQUEST FOR INFORMATION NOT ADDRESSED IN THIS CCO REMAIN IN FORCE

MARK	DATE	DESCRIPTIONS	BY	CH'D	CCO#
4	11/09/11	BIKE PATH CONDUIT	TW	NK	73
3	04/15/11	BIKE PATH CONDUIT	TW	RG	73
2	06/11/10	BIKE PATH CONDUIT	TW	RG	73
1	10/10/08	LIGHTING REVISIONS	RY AG	RG FW	43

REVISIONS

2 REVISIONS SUPERCEDED 3

CONTRACT CHANGE ORDER NO. 73
SHEET 11 OF 52

DETAILS
SAS SUPERSTRUCTURE ROADWAY EASTBOUND
120 V BIKE PATH LIGHTING WIRING DIAGRAMS
NO SCALE

E-147

STATE OF CALIFORNIA - DEPARTMENT OF TRANSPORTATION
Caltrans

DESIGN OVERSIGHT
BEHZAD GOLEMOHAMMADI

CALCULATED/DESIGNED BY KG
CHECKED BY AB
DATE 11/01 REVISED BY
12/01 DATE REVISED

LAST REVISION 00-00-00
DATE PLOTTED => 11/9/2011
TIME PLOTTED => 5:02:28 PM

FOR REDUCED PLANS ORIGINAL SCALE IS IN MILLIMETERS 0 20 40 60 80

DGN FILE =>04-0120f1_0198R04.dgn
USERNAME =>llorico

CU 04251

EA 0120F1

DIST	COUNTY	ROUTE	KILOMETER POST TOTAL PROJECT	SHEET No.	TOTAL SHEETS
04	SF	80	13.2/13.9	204 R3	1204

REGISTERED ELECTRICAL ENGINEER 12/19/02 DATE

12-6-04
PLANS APPROVAL DATE

REGISTERED PROFESSIONAL ENGINEER JENS ERLINGSSON No. 8249 Exp. 9/30/06 ELECTRICAL STATE OF CALIFORNIA

PB POWER, Inc.
A Parsons Brinckerhoff Company
303 Second St., Suite 700N
San Francisco, CA 94107-1317

The State of California or its officers or agents shall not be responsible for the accuracy or completeness of electronic copies of this plan sheet.

Caltrans now has a web site! To get to the web site, go to http://www.dot.ca.gov

LIGHTING PANEL LP-219 (CKT #2103)

LOCATION: SAS SUPERSTRUCTURE SERVICE PLATFORM #4

LOAD DESCRIPTION	LTG	CB		CB	LTG	LOAD DESCRIPTION
Spare		20/1	1 A 2	20/1	434	Bike Path LTG (5) Belvedere (4) △3
		20/1	3 B 4	20/1	434 △3	Bike Path LTG (5) Belvedere (4) △3
		20/1	5 C 6	20/1	216	Bike Path LTG (4)
		20/1	7 A 8	20/1	216	Bike Path LTG (4)
		20/1	9 B 10	20/1		Spare
		20/1	11 C 12	20/1		
TOTAL VA					△3 1,300	TOTAL VA

LOAD SUMMARY (INCLUDES .90 PF) (VA)
LIGHTING (AT 100%): 1,300 △3

TOTAL kVA: 1,300 △3

BALANCE (kVA)
Phase A - 0.650
Phase B - 0.434 △3
Phase C - 0.216

VOLTAGE: 208/120 V
PHASE/WIRES: 3-phase, 4-wire
BUS RATING: 100 A
MAIN: MAIN LUGS ONLY
MOUNTING: Surface
K.A.I.C.: 10

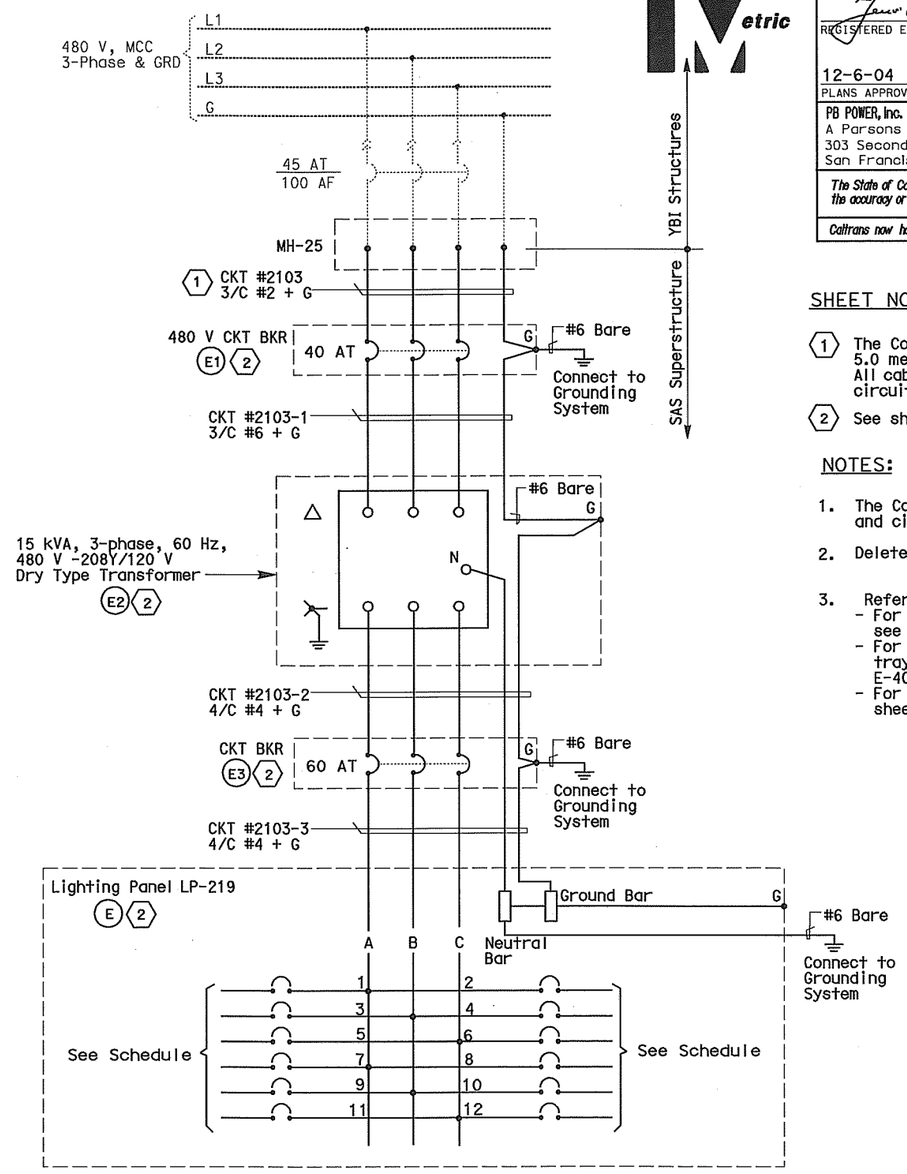

SHEET NOTES:

1. The Contractor shall extend and coil 5.0 meters of cable in M.H.#25 All cables shall be tagged with circuit numbers as shown.
2. See sheet E-71 for Equipment Schedule.

NOTES:

1. The Contractor shall provide nameplates and circuit schedules as shown.
2. Deleted
3. References:
   - For LVCC-A single line diagram, see sheets E-29 thru E-31.
   - For circuit and conduit/cable tray schedules, see sheets starting at E-401.
   - For pull box schedule, see sheet E-169.

REGISTERED PROFESSIONAL ENGINEER FADI WALIEDDINE No. 11465 Exp. 12/31/2009 ELECTRICAL STATE OF CALIFORNIA

FOR REVISION ONLY △1

REGISTERED PROFESSIONAL ENGINEER SYN YEE CHIN No. 18186 Exp. 09/30/2011 ELECTRICAL STATE OF CALIFORNIA

FOR REVISION ONLY △2 △3

△2 REVISIONS SUPERCEDED △3

REQUEST FOR INFORMATION NOT ADDRESSED IN THIS CCO REMAIN IN FORCE

MARK	DATE	DESCRIPTIONS	BY	CH'D	CCO#
△3	03/24/11	BIKE PATH CONDUIT	TW	RG	73
△2	06/11/10	BIKE PATH CONDUIT	TW	RG	73
△1	03/30/09	SERVICE PLATFORM ELECTRICAL CHANGES	RR MP	RG FW	55

REVISIONS

CONTRACT CHANGE ORDER NO. 73
SHEET 12 OF 52

DETAILS
SAS SUPERSTRUCTURE ROADWAY EASTBOUND PANEL LP-219 SCHEDULE
NO SCALE

E-155

THIS PLAN ACCURATE FOR ELECTRICAL WORK ONLY.

STATE OF CALIFORNIA - DEPARTMENT OF TRANSPORTATION
Caltrans

DESIGN OVERSIGHT: BEHZAD GOLEMOHAMMADI

CALCULATED/DESIGNED BY: JP — CHECKED BY: BL

DATE 09/01 — REVISED BY — DATE REVISED

LAST REVISION 00-00-00 — DATE PLOTTED => 15-APR-2011 — TIME PLOTTED => 13:21

FOR REDUCED PLANS ORIGINAL SCALE IS IN MILLIMETERS 0 20 40 60 80

DGN FILE =>04-0120f1_0204R03.dgn
USERNAME =>liorico

CU 04251 — EA 0120F1

DIST	COUNTY	ROUTE	KILOMETER POST TOTAL PROJECT	SHEET No.	TOTAL SHEETS
04	SF	80	13.2/13.9	205 R3	1204

REGISTERED ELECTRICAL ENGINEER 12/19/02 DATE

12-6-04
PLANS APPROVAL DATE

REGISTERED PROFESSIONAL ENGINEER JENS ERLINGSSON No. 8249 Exp. 9/30/06 ELECTRICAL STATE OF CALIFORNIA

PB POWER, Inc.
A Parsons Brinckerhoff Company
303 Second St., Suite 700N
San Francisco, CA 94107-1317

The State of California or its officers or agents shall not be responsible for the accuracy or completeness of electronic copies of this plan sheet.

Caltrans now has a web site! To get to the web site, go to http://www.dot.ca.gov

LIGHTING PANEL LP-220 (CKT #2104)

LOCATION: SAS SUPERSTRUCTURE SERVICE PLATFORM #5

LOAD DESCRIPTION	LTG	CB		CB	LTG	LOAD DESCRIPTION
Spare		20/1	1 A 2	20/1	270	Bike Path LTG (5)
		20/1	3 B 4	20/1	270	Bike Path LTG (5)
		20/1	5 C 6	20/1	270	Bike Path LTG (5)
		20/1	7 A 8	20/1	270	Bike Path LTG (5)
		20/1	9 B 10	20/1		Spare
		20/1	11 C 12	20/1		
TOTAL VA					1,080	TOTAL VA

LOAD SUMMARY (INCLUDES .90 PF) (VA)
LIGHTING (AT 100%): 1,080

TOTAL kVA: 1.080

BALANCE (kVA)
Phase A - 0.540
Phase B - 0.270
Phase C - 0.270

VOLTAGE: 208/120 V
PHASE/WIRES: 3-phase, 4-wire
BUS RATING: 100 A
MAIN: MAIN LUGS ONLY
MOUNTING: Surface
K.A.I.C.: 10

LIGHTING PANEL LP-221 (CKT #2105)

LOCATION: SAS SUPERSTRUCTURE SERVICE PLATFORM #6

LOAD DESCRIPTION	LTG	CB		CB	LTG	LOAD DESCRIPTION
Spare		20/1	1 A 2	20/1	216	Bike Path LTG (4)
		20/1	3 B 4	20/1	216	Bike Path LTG (4)
		20/1	5 C 6	20/1	378	Bike Path LTG (7)
		20/1	7 A 8	20/1	378	Bike Path LTG (7)
		20/1	9 B 10	20/1		Spare
		20/1	11 C 12	20/1		
TOTAL VA					1188	TOTAL VA

LOAD SUMMARY (INCLUDES .90 PF) (VA)
LIGHTING (AT 100%): 1188

TOTAL kVA: 1.188

BALANCE (kVA)
Phase A - 0.594
Phase B - 0.216
Phase C - 0.378

VOLTAGE: 208/120 V
PHASE/WIRES: 3-phase, 4-wire
BUS RATING: 100 A
MAIN: Main Lugs Only
MOUNTING: Surface
K.A.I.C.: 10

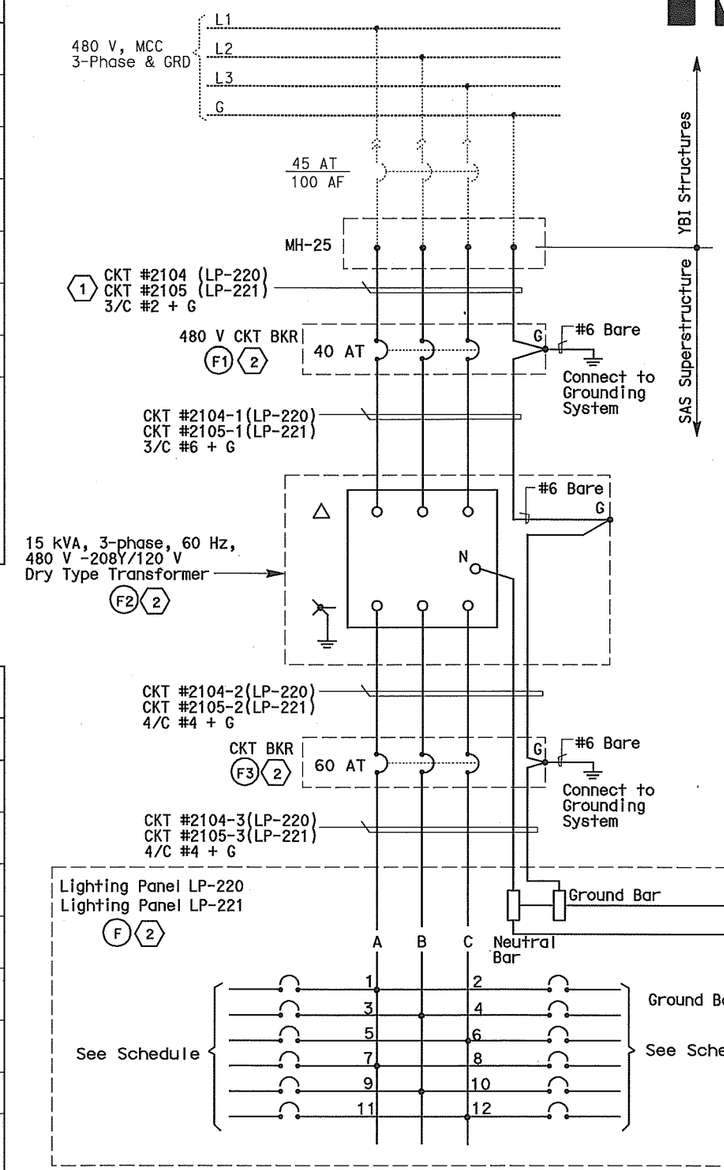

SHEET NOTES:

1. The Contractor shall extend and coil 5.0 meters of cable in M.H.#25 All cables shall be tagged with circuit numbers as shown.
2. See Sheets E-72 for Equipment Schedule.

NOTES:

1. The Contractor shall provide nameplates and circuit schedules as shown.
2. Deleted
3. References:
   - For LVCC-B single line diagram, see sheets E-32 thru E-34.
   - For circuit and conduit/cable tray schedules, see sheets starting at E-401.
   - For pull box schedule, see sheet E-169.

REQUEST FOR INFORMATION NOT ADDRESSED IN THIS CCO REMAIN IN FORCE

MARK	DATE	DESCRIPTIONS	BY	CH'D	CCO#
3	03/24/11	BIKE PATH CONDUIT	TW	RG	73
2	06/11/10	BIKE PATH CONDUIT	TW	RG	73
1	03/30/09	SERVICE PLATFORM ELECTRICAL CHANGES	RR	RG FW	55

REVISIONS

CONTRACT CHANGE ORDER NO. 73
SHEET 13 OF 52

2 REVISIONS SUPERCEDED 3

REGISTERED PROFESSIONAL ENGINEER FADI WALIEDDINE No. 11465 Exp. 12/31/2009 ELECTRICAL STATE OF CALIFORNIA
FOR REVISION ONLY 1

REGISTERED PROFESSIONAL ENGINEER SYN YEE CHIN No. 18186 Exp. 09/30/2011 ELECTRICAL STATE OF CALIFORNIA
Syn Yee Chin
FOR REVISION ONLY 2 3

DETAILS
SAS SUPERSTRUCTURE ROADWAY EASTBOUND PANEL LP-220 AND LP-221 SCHEDULES
NO SCALE

E-156

DATE	REVISED BY	DATE REVISED
09/01	JP	BL 11/01

CALCULATED/DESIGNED BY JP
CHECKED BY BL

DESIGN OVERSIGHT
BEHZAD GOLEMOHAMMADI

STATE OF CALIFORNIA - DEPARTMENT OF TRANSPORTATION
Caltrans

DATE PLOTTED => 18-APR-2011
TIME PLOTTED => 08:46
LAST REVISION 00-00-00

FOR REDUCED PLANS ORIGINAL SCALE IS IN MILLIMETERS 0 20 40 60 80

DGN FILE =>04-0120f1_0205R03.dgn
USERNAME =>llorico

CU 04251 EA 0120F1

DIST	COUNTY	ROUTE	KILOMETER POST TOTAL PROJECT	SHEET No	TOTAL SHEETS
04	SF	80	13.2/13.9	206 R3	1204

12/19/02
REGISTERED ELECTRICAL ENGINEER DATE

12-6-04
PLANS APPROVAL DATE

REGISTERED PROFESSIONAL ENGINEER JENS ERLINGSSON No. 8249 Exp. 9/30/06 ELECTRICAL STATE OF CALIFORNIA

PB POWER, Inc.
A Parsons Brinckerhoff Company
303 Second St., Suite 700N
San Francisco, CA 94107-1317

The State of California or its officers or agents shall not be responsible for the accuracy or completeness of electronic copies of this plan sheet.

Caltrans now has a web site! To get to the web site, go to http://www.dot.ca.gov

Caltrans Metric

LIGHTING PANEL LP-222 (CKT #2106)

LOCATION: SAS SUPERSTRUCTURE SERVICE PLATFORM #7

LOAD DESCRIPTION	LTG	CB		CB	LTG	LOAD DESCRIPTION
Spare		20/1	1 A 2	20/1	432	Bike Path LTG (8)
		20/1	3 B 4	20/1	432	Bike Path LTG (8)
		20/1	5 C 6	20/1	378	Bike Path LTG (7)
		20/1	7 A 8	20/1	378	Bike Path LTG (7)
		20/1	9 B 10	20/1		Spare
		20/1	11 C 12	20/1		
TOTAL VA					1,620	TOTAL VA

LOAD SUMMARY (INCLUDES .90 PF) (VA)
LIGHTING (AT 100%): 1,620

TOTAL kVA: 1.620

BALANCE (kVA)
Phase A - 0.810
Phase B - 0.432
Phase C - 0378

VOLTAGE: 208/120 V
PHASE/WIRES: 3-phase, 4-wire
BUS RATING: 100 A
MAIN: MAIN LUGS ONLY
MOUNTING: Surface
K.A.I.C.: 10

LIGHTING PANEL LP-223 (CKT #2107)

LOCATION: SAS SUPERSTRUCTURE SERVICE PLATFORM #8

LOAD DESCRIPTION	LTG	CB		CB	LTG	LOAD DESCRIPTION
Spare		20/1	1 A 2	20/1	432	Bike Path LTG (8)
		20/1	3 B 4	20/1	432	Bike Path LTG (8)
		20/1	5 C 6	20/1	542	Bike Path ~~LTG~~ (7) Belvedere (4) 3
		20/1	7 A 8	20/1	542	Bike Path ~~LTG~~ (7) Belvedere (4) 3
		20/1	9 B 10	20/1	3	Spare
		20/1	11 C 12	20/1		
TOTAL VA					3 1,948	TOTAL VA

LOAD SUMMARY (INCLUDES .90 PF) (VA)
LIGHTING (AT 100%): 1,948 3

TOTAL kVA: 1.948 3

BALANCE (kVA)
Phase A - 0.974 3
Phase B - 0.432
Phase C - 0.542 3

VOLTAGE: 208/120 V
PHASE/WIRES: 3-phase, 4-wire
BUS RATING: 100 A
MAIN: Main Lugs Only
MOUNTING: Surface
K.A.I.C.: 10

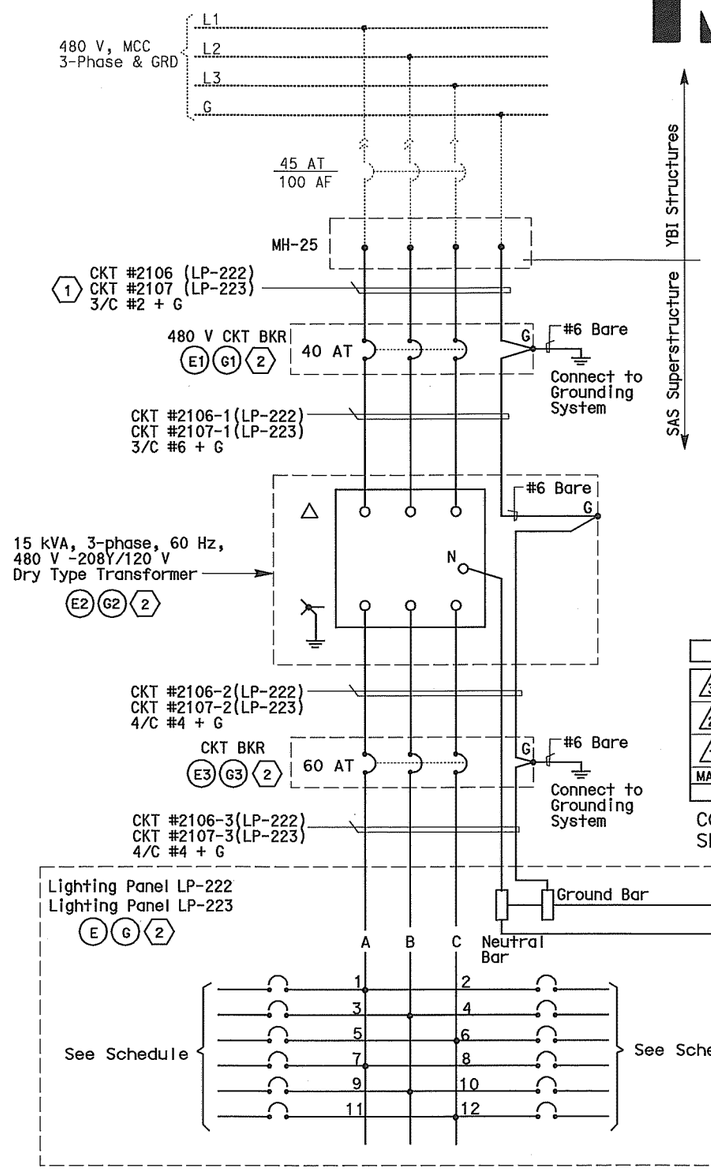

SHEET NOTES:

1. The Contractor shall extend and coil 5.0 meters of cable in manhole 25 All cables shall be tagged with circuit numbers as shown.
2. See Sheets E-74 & E-75 for Equipment Schedule.

NOTES:

1. The Contractor shall provide nameplates and circuit schedules as shown.
2. Deleted
3. References:
   - For LVCC-B single line diagram, see sheets E-32 thru E-34.
   - For circuit and conduit/cable tray schedules, see sheets starting at E-401.
   - For pull box schedule, see sheet E-169.

REQUEST FOR INFORMATION NOT ADDRESSED IN THIS CCO REMAIN IN FORCE

MARK	DATE	DESCRIPTIONS	BY	CH'D	CCO#
3	03/24/11	BIKE PATH CONDUIT	TW	RG	73
2	06/11/10	BIKE PATH CONDUIT	TW	RG	73
1	03/30/09	SERVICE PLATFORM ELECTRICAL CHANGES	RR	RG FW	55

REVISIONS

CONTRACT CHANGE ORDER NO. 73
SHEET 14 OF 52

REGISTERED PROFESSIONAL ENGINEER FADI WALIEDDINE No. 11465 Exp. 12/31/2009 ELECTRICAL STATE OF CALIFORNIA
FOR REVISION ONLY 1

REGISTERED PROFESSIONAL ENGINEER SYN YEE CHIN No. 18186 Exp. 09/30/2011 ELECTRICAL STATE OF CALIFORNIA
Syn Yee Chin
FOR REVISION ONLY 2 3

2 REVISIONS SUPERCEDED 3

DETAILS
SAS SUPERSTRUCTURE ROADWAY EASTBOUND PANEL LP-222 AND LP-223 SCHEDULES
NO SCALE

E-157

DATE	REVISED BY	DATE REVISED
09/01	JP	BL 11/01

CALCULATED/DESIGNED BY JP
CHECKED BY BL

DESIGN OVERSIGHT
BEHZAD GOLEMOHAMMADI

STATE OF CALIFORNIA - DEPARTMENT OF TRANSPORTATION
Caltrans

FOR REDUCED PLANS ORIGINAL SCALE IS IN MILLIMETERS 0 20 40 60 80

DGN FILE =>04-0120f1_0206R03.dgn
USERNAME =>llorico

CU 04251
EA 0120F1

LAST REVISION 00-00-00
DATE PLOTTED => 15-APR-2011
TIME PLOTTED => 13:21

DIST	COUNTY	ROUTE	KILOMETER POST TOTAL PROJECT	SHEET No	TOTAL SHEETS
04	SF	80	13.2/13.9	207 S2R1	1204

REGISTERED ELECTRICAL ENGINEER DATE 9/18/2007

PLANS APPROVAL DATE

REGISTERED PROFESSIONAL ENGINEER HARRELL FUMIO TAKAKI No. E 8651 Exp. 9/30/2008 ELECTRICAL STATE OF CALIFORNIA

PB AMERICAS, Inc.
A Parsons Brinckerhoff Company
303 Second St., Suite 700N
San Francisco, CA 94107-1317

The State of California or its officers or agents shall not be responsible for the accuracy or completeness of electronic copies of this plan sheet.

Caltrans now has a web site! To get to the web site, go to http://www.dot.ca.gov

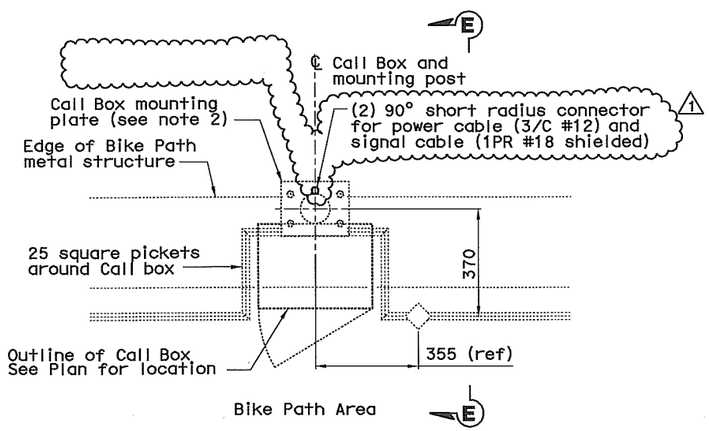

PLAN

CALL BOX MOUNTING AT BIKE PATH
SCALE 1:10

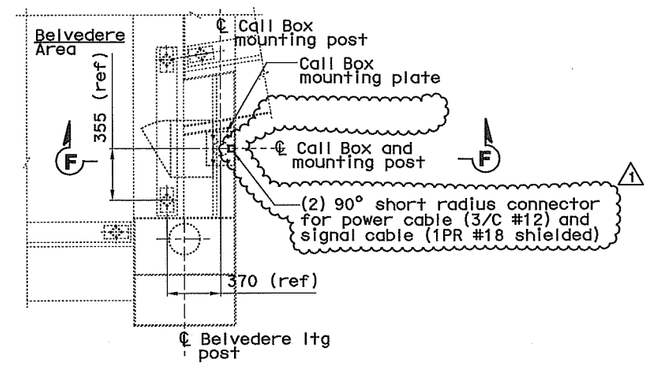

PLAN

CALL BOX MOUNTING AT BELVEDERE
SCALE 1:20

NOTES:

1. References:
   - For call box schedule, see Sheet E-397.
2. For call box support, see drawing AS-2.
3. Call box dimensions are 495.8 mm high x 393.7 mm wide x 292.1 mm depth.
4. ~~Field to locate support for~~ liquidtight flexible metal conduit and the PVC Coated RGS ~~conduit below Bike Path structure.~~ 1
5. 1 Provide approximately 5 m of pigtails for power and TOS conductors for future termination to the call box. Pigtails must be coiled and protected from damage. Seal each conductor end to prevent water from entering the insulation.

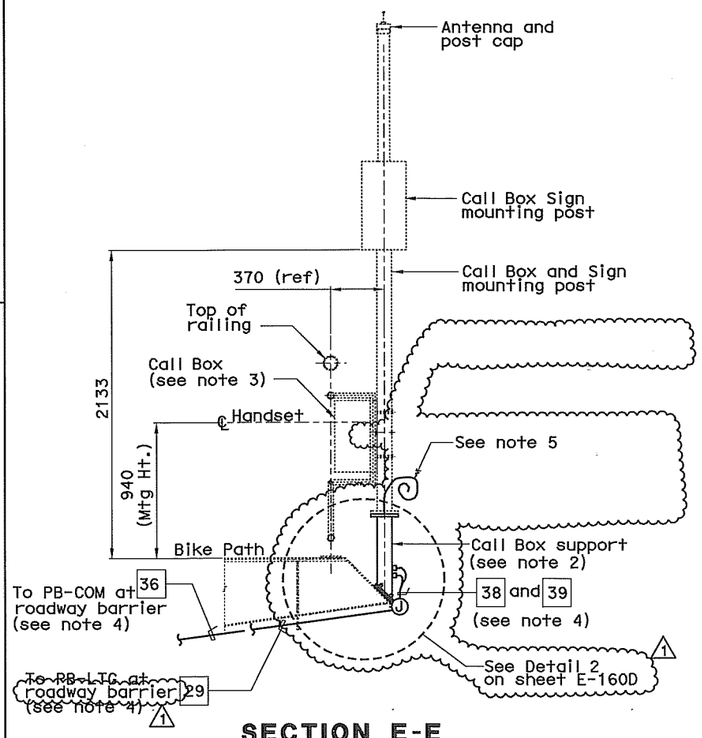

SECTION E-E

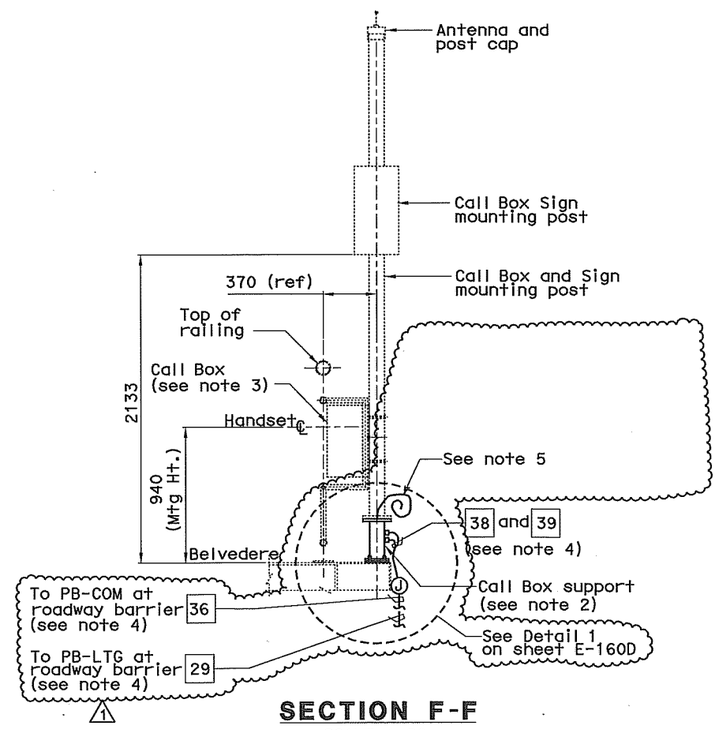

SECTION F-F

SCALE 1:20

REGISTERED PROFESSIONAL ENGINEER SYN YEE CHIN No. 18186 Exp. 09/30/2011 ELECTRICAL STATE OF CALIFORNIA

Syn Yee Chin
FOR REVISION ONLY
1

REQUEST FOR INFORMATION NOT ADDRESSED IN THIS CCO REMAIN IN FORCE					
1	06/11/10	BIKE PATH CONDUIT	TW	RG	73
0	03/04/08	BARRIER MODIFICATIONS	EL	RG SE	44
MARK	DATE	DESCRIPTIONS	BY	CH'D	CCO#
REVISIONS					

CONTRACT CHANGE ORDER NO. 73
SHEET 15 OF 52

DETAILS
SAS SUPERSTRUCTURE ROADWAY EASTBOUND CONDUIT AND PULL BOX LOCATIONS

SCALE AS NOTED

E-160B

DATE	REVISED BY	DATE REVISED
09/07	RG	09/07

CALCULATED/DESIGNED BY JS
CHECKED BY

DESIGN OVERSIGHT
BEHZAD GOLEMOHAMMADI

STATE OF CALIFORNIA - DEPARTMENT OF TRANSPORTATION
Caltrans

THIS PLAN IS ACCURATE FOR ELECTRICAL WORK ONLY.

ALL DIMENSIONS ARE IN MILLIMETERS UNLESS OTHERWISE SHOWN.

FOR REDUCED PLANS ORIGINAL SCALE IS IN MILLIMETERS 0 20 40 60 80

DGN FILE =>04-0120f1_0207S02R01.dgn
USERNAME =>llorico

CU 04251

EA 0120F1

LAST REVISION 00-00-00
DATE PLOTTED => 15-APR-2011
TIME PLOTTED => 13:21

DIST	COUNTY	ROUTE	KILOMETER POST TOTAL PROJECT	SHEET No	TOTAL SHEETS
04	SF	80	13.2/13.9	207 S3R1	1204

REGISTERED ELECTRICAL ENGINEER 02/11/10 DATE

PLANS APPROVAL DATE

REGISTERED PROFESSIONAL ENGINEER DAVID H. OTO No. 10699 Exp. 06/30/2011 ELECTRICAL STATE OF CALIFORNIA

PB AMERICAS, Inc.
A Parsons Brinckerhoff Company
303 Second St., Suite 700N
San Francisco, CA 94107-1317

The State of California or its officers or agents shall not be responsible for the accuracy or completeness of electronic copies of this plan sheet.

Caltrans now has a web site! To get to the web site, go to http://www.dot.ca.gov

Caltrans Metric

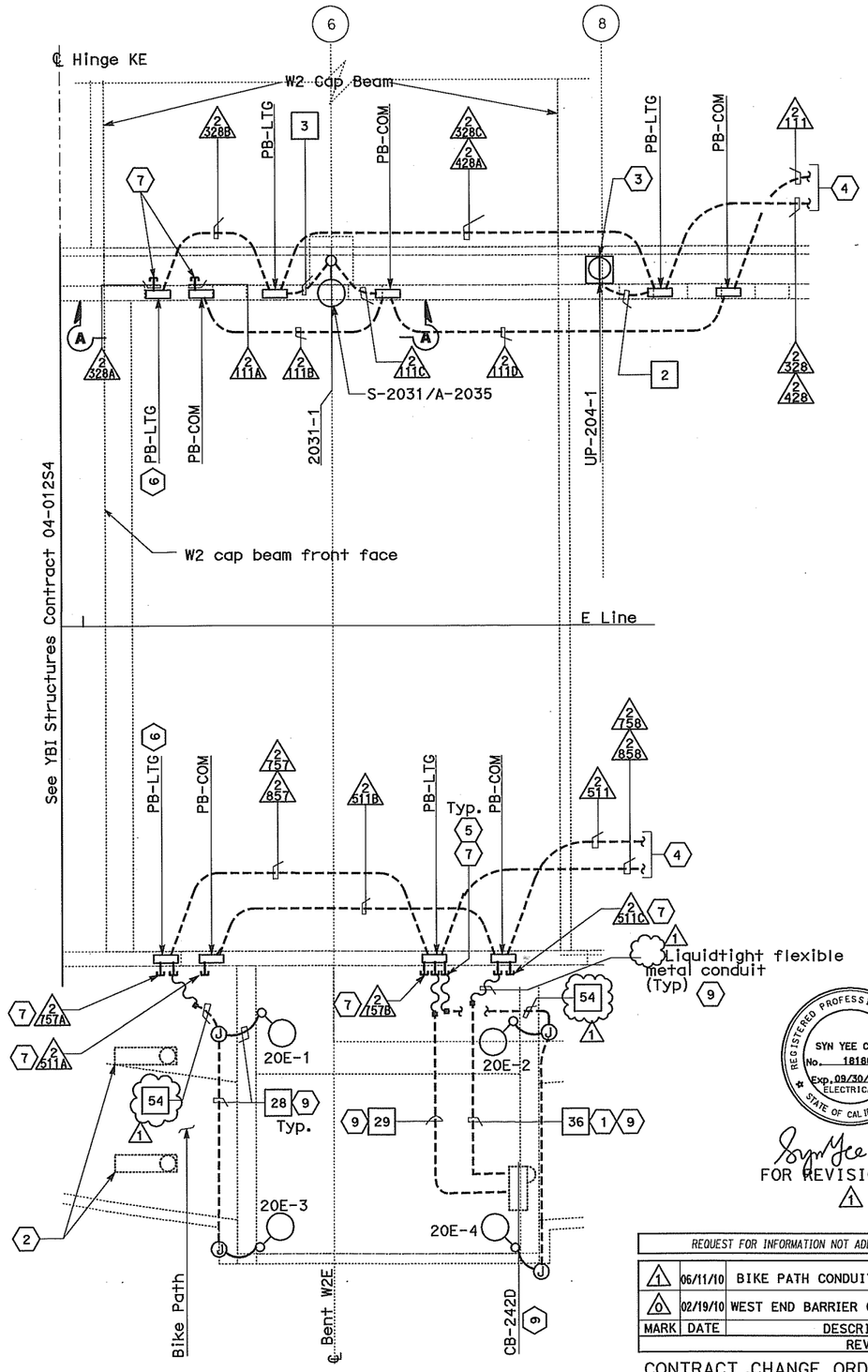

CONDUIT PLAN
SCALE: 1:100

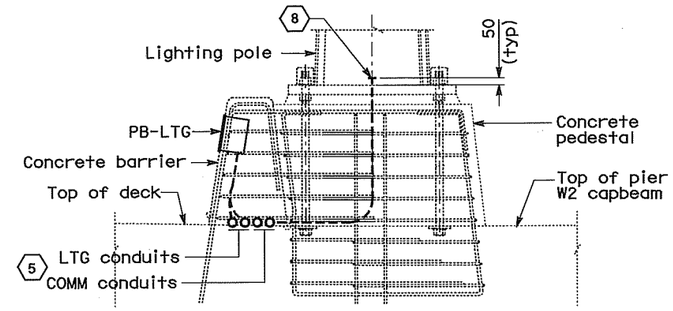

SECTION D-D
NO SCALE

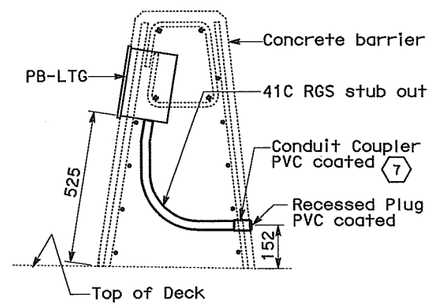

SECTION B-B
NO SCALE
Typical for PB-LTG in concrete barrier.

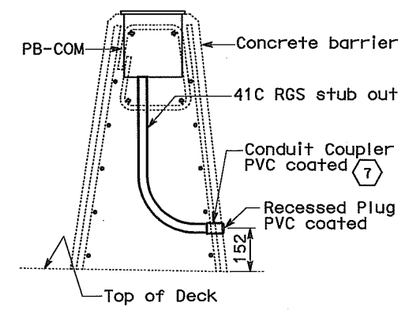

SECTION C-C
NO SCALE
Typical for PB-COM in concrete barrier.

SHEET NOTES:

1. Contractor shall coil 70 meters inside cable tray at PP15 for feed into PB-COM by others.
2. Railing lights are conrtractor furnished and installed by others.
3. Roadway Barrier Receptacle, see Detail 1, sheet E-68.
4. See drawing E-135 for continuation of conduits.
5. Conduit arrangement may be adjusted to suit field condition.
6. Contractor shall verify dimension and locate PB-LTG with sufficient distance to accommodate required clearance for the expansion joint.
7. Stub-out conduits are furnished and installed by Contractor. Conduit shall stub-out at the non-roadway side of the barrier with the coupler flushed to the barrier face wall and provided with plug.
8. Capped end of conduit stub-ups.
9. Bike path electrical components west of PP-9 are furnished by Contractor and installed by others.

NOTES:

1. For additional general notes, see E135.

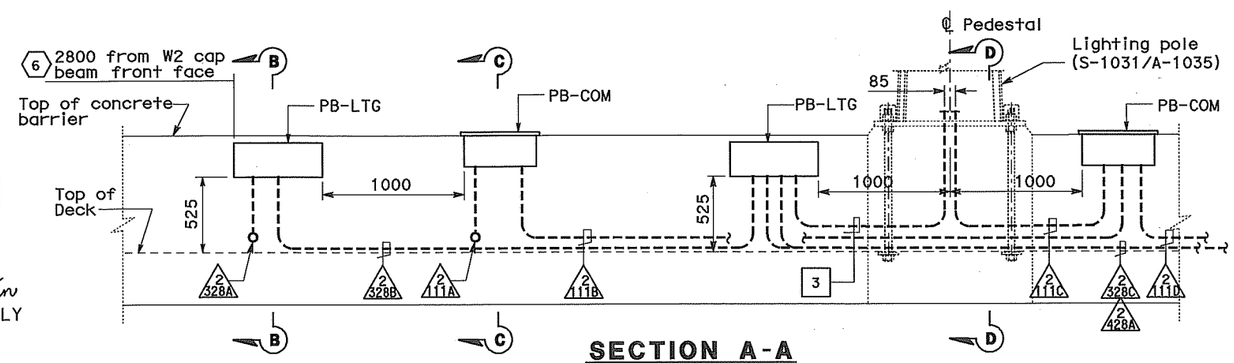

SECTION A-A
NO SCALE
Similar for installation of PB-LTG and PB-COM on south side concrete barrier.
Conduit routing varies, see conduit plan.

REGISTERED PROFESSIONAL ENGINEER SYN YEE CHIN No. 18186 Exp. 09/30/2011 ELECTRICAL STATE OF CALIFORNIA

Syn Yee Chin
FOR REVISION ONLY
1

REQUEST FOR INFORMATION NOT ADDRESSED IN THIS CCO REMAIN IN FORCE

MARK	DATE	DESCRIPTIONS	BY	CH'D	CCO#
1	06/11/10	BIKE PATH CONDUIT	TW	RG	73
0	02/19/10	WEST END BARRIER CONDUIT	TW	RG DO	44S1

REVISIONS

CONTRACT CHANGE ORDER NO. 73
SHEET 16 OF 52

DETAILS
SAS SUPERSTRUCTURE ROADWAY EASTBOUND CONDUIT AND PULL BOX LOCATIONS
SCALE AS NOTED

E-160C

DESIGN OVERSIGHT	CALCULATED/DESIGNED BY	RG	DATE 6-09	REVISED BY
BEHZAD GOLEMOHAMMADI	CHECKED BY	FW	6-09	DATE REVISED

STATE OF CALIFORNIA - DEPARTMENT OF TRANSPORTATION
Caltrans

THIS PLAN ACCURATE FOR ELECTRICAL WORK ONLY

ALL DIMENSIONS ARE IN MILLIMETERS UNLESS OTHERWISE SHOWN

FOR REDUCED PLANS ORIGINAL SCALE IS IN MILLIMETERS 0 20 40 60 80

DGN FILE =>04-0120f1_0207S03R01.dgn
USERNAME =>llorico

CU 04251 | EA 0120F1

LAST REVISION 00-00-00 | DATE PLOTTED => 15-APR-2011 | TIME PLOTTED => 13:21

DIST	COUNTY	ROUTE	KILOMETER POST TOTAL PROJECT	SHEET No	TOTAL SHEETS
04	SF	80	13.2/13.9	207 S4R1	1204

Syn Yee Chin 04/23/10
REGISTERED ELECTRICAL ENGINEER DATE

REGISTERED PROFESSIONAL ENGINEER SYN YEE CHIN No. 18186 Exp. 09/30/2011 ELECTRICAL STATE OF CALIFORNIA

PLANS APPROVAL DATE

PB AMERICAS, Inc.
A Parsons Brinckerhoff Company
303 Second St., Suite 700N
San Francisco, CA 94107-1317

The State of California or its officers or agents shall not be responsible for the accuracy or completeness of electronic copies of this plan sheet.

Caltrans now has a web site! To get to the web site, go to http://www.dot.ca.gov

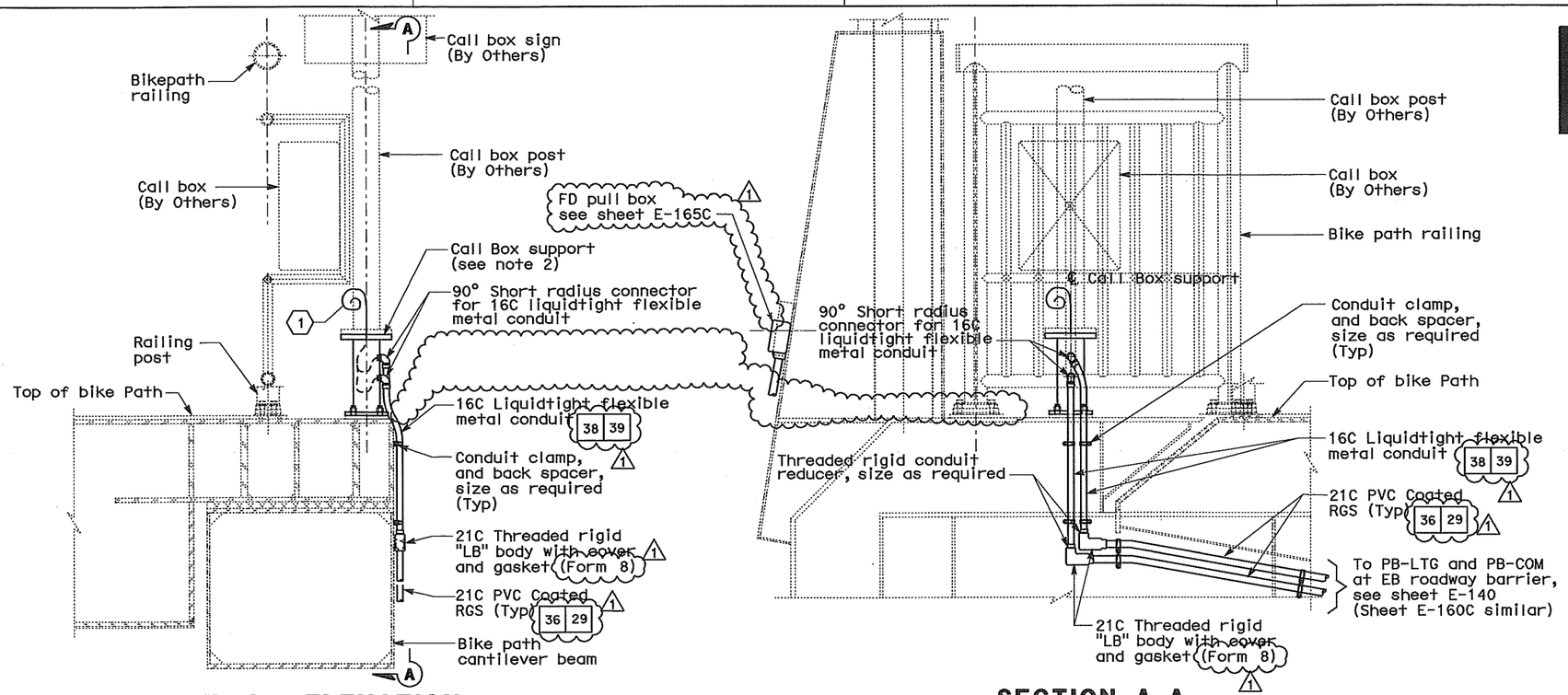

DETAIL 1 - ELEVATION

CALL BOX AT BELVEDERE (See Sheet E-160B. similar for Sheet 160C)
SCALE 1:10

SECTION A-A

SCALE 1:10

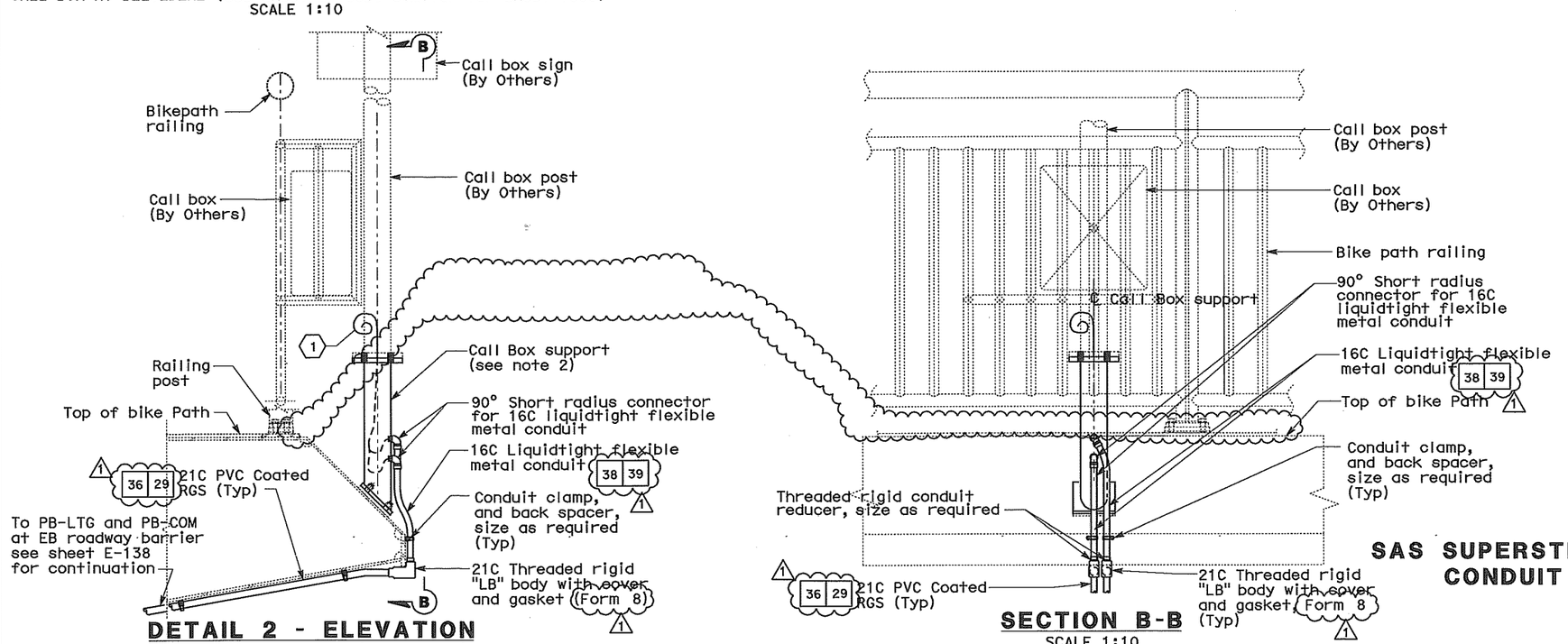

DETAIL 2 - ELEVATION

CALL BOX AT BIKE PATH (See E-160B)
SCALE 1:10

SECTION B-B

SCALE 1:10

SHEET NOTES:

(1) Provide approximately 5 m of pigtails for power and TOS conductors for future termination to the call box. Seal each conductor end to prevent water from entering the insulation. Pigtails shall be coiled and protected from damage. Provide weatherproof covers for the pigtails and call box supports.

NOTES:

1. References:
   - For call box schedule, see Sheet E-397.
2. For call box support, see drawing AS-2.
3. Call box dimensions are 495.8 mm high x 393.7 mm wide x 292.1 mm depth.
4. For additional notes, see sheet E-160B.
5. For call box location at Belvedere, see sheets E-140 and E-160C.
6. For call box location at bike path, see sheet E-138.
7. All conduit connections shall be watertight.

REQUEST FOR INFORMATION NOT ADDRESSED IN THIS CCO REMAIN IN FORCE

MARK	DATE	DESCRIPTIONS	BY	CH'D	CCO#
1	04/15/11	BIKE PATH CONDUIT	TW	RG	73
0	06/11/10	BIKE PATH CONDUIT	TW	RG	73

REVISIONS

CONTRACT CHANGE ORDER NO. 73
SHEET 17 OF 52

DETAILS
SAS SUPERSTRUCTURE ROADWAY EASTBOUND CONDUIT AND PULL BOX LOCATIONS

SCALE AS NOTED

E-160D

REVISED BY	DATE REVISED

CALCULATED/DESIGNED BY	XX	DATE XX/10
CHECKED BY	XX	XX/10

DESIGN OVERSIGHT
BEHZAD GOLEMOHAMMADI

STATE OF CALIFORNIA - DEPARTMENT OF TRANSPORTATION
Caltrans

THIS PLAN ACCURATE FOR ELECTRICAL WORK ONLY

ALL DIMENSIONS ARE IN MILLIMETERS UNLESS OTHERWISE SHOWN

FOR REDUCED PLANS ORIGINAL SCALE IS IN MILLIMETERS 0 20 40 60 80

DGN FILE =>04-0120f1_0207S04R01.dgn
USERNAME =>llorico

CU 04251

EA 0120F1

LAST REVISION 00-00-00

DATE PLOTTED => 18-APR-2011
TIME PLOTTED => 09:14

DIST	COUNTY	ROUTE	KILOMETER POST TOTAL PROJECT	SHEET No	TOTAL SHEETS
04	SF	80	13.2/13.9	210 R5	1204

REGISTERED ELECTRICAL ENGINEER 12/19/02 DATE

12-6-04
PLANS APPROVAL DATE

REGISTERED PROFESSIONAL ENGINEER JENS ERLINGSSON No. 8249 Exp. 9/30/06 ELECTRICAL STATE OF CALIFORNIA

PB POWER, Inc.
A Parsons Brinckerhoff Company
303 Second St., Suite 700N
San Francisco, CA 94107-1317

The State of California or its officers or agents shall not be responsible for the accuracy or completeness of electronic copies of this plan sheet.

Caltrans now has a web site! To get to the web site, go to http://www.dot.ca.gov

Caltrans Metric

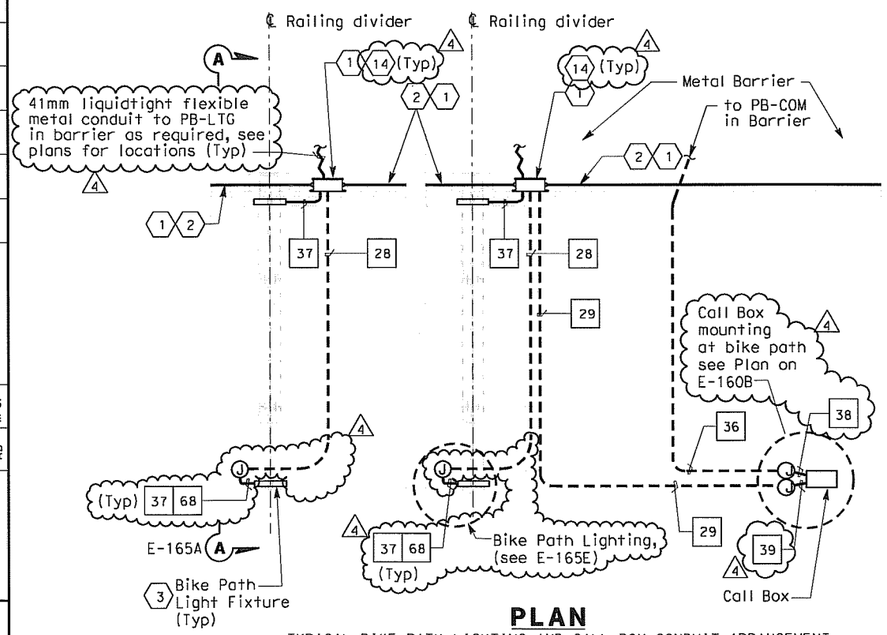

PLAN
TYPICAL BIKE PATH LIGHTING AND CALL BOX CONDUIT ARRANGEMENT
SCALE 1:50

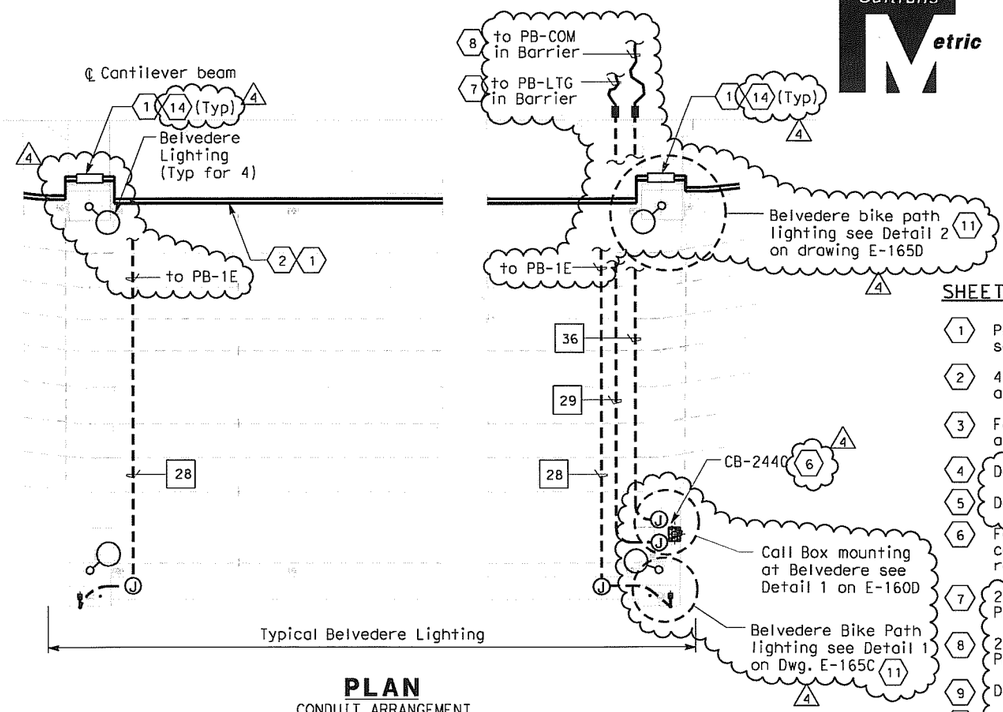

PLAN
CONDUIT ARRANGEMENT
SCALE 1:50

SHEET NOTES:

1. PB-1E and conduit support, mounting details see sheet E-165A.
2. 41C, continued to the next PB-1E mounted along side at Bike Path deck.
3. For bike path light detail, see sheet E-172 and E-165E.
4. Deleted.
5. Deleted.
6. For connection and mounting details of call box on railings, refer to structural railing details.
7. 21 mm liquidtight flexible metal conduit to PB-LTG inside the roadway steel barrier.
8. 21 mm liquidtight flexible metal conduit to PB-COM inside the roadway steel barrier.
9. Deleted.
10. Deleted.
11. For details of Belvedere, see sheet E-173.
12. Deleted.
13. Deleted.
14. Install 5A in-line fuse per light fixture, inside the belvedere light pole. For bike path lights (north/south hand railing) install 5A in-line fuses ~~inside PB-1E located or not in side of bike path.~~

NOTES:

1. All exposed conduits and fittings installed between the roadway and the bike path shall be PVC coated galvanized steel unless noted otherwise.
2. See sheets E-135 through E-140 for SAS Superstructure Roadway Plans.

REGISTERED PROFESSIONAL ENGINEER MAXWELL FUMIO TAKAKI No. E 8651 Exp. 9/30/2008 ELECTRICAL STATE OF CALIFORNIA
FOR REVISION ONLY 1

REGISTERED PROFESSIONAL ENGINEER S. A. ESTOQUE, JR. No. E-10151 Exp. 12/31/2008 ELECTRICAL STATE OF CALIFORNIA
FOR REVISION ONLY 2

REGISTERED PROFESSIONAL ENGINEER SYN YEE CHIN No. 18186 Exp. 09/30/2011 ELECTRICAL STATE OF CALIFORNIA
FOR REVISION ONLY 3 4 5

3 REVISIONS SUPERCEDED 4

REQUEST FOR INFORMATION NOT ADDRESSED IN THIS CCO REMAIN IN FORCE

MARK	DATE	DESCRIPTIONS	BY	CH'D	CCO#
5	11/11/11	BIKE PATH CONDUIT	TW	NK	73
4	04/15/11	BIKE PATH CONDUIT	TW	RG	73
3	06/11/10	BIKE PATH CONDUIT	TW	RG	73
2	03/04/08	BARRIER MODIFICATIONS	JS BM	RG SE	44
1	02/19/08	ELECTRICAL MODIFICATIONS	MP EL	RR	42

REVISIONS

CONTRACT CHANGE ORDER NO. 73
SHEET 18 OF 52

DETAILS
SAS SUPERSTRUCTURE ROADWAY EASTBOUND
TYPICAL BIKE PATH PLANS AND SECTIONS
SCALE AS NOTED

E-165

REVISED BY	DATE REVISED

CALCULATED/DESIGNED BY	KG	DATE 10/01
CHECKED BY	AB	11/01

DESIGN OVERSIGHT
BEHZAD GOLEMOHAMMADI

STATE OF CALIFORNIA - DEPARTMENT OF TRANSPORTATION
Caltrans

THIS PLAN IS ACCURATE FOR ELECTRICAL WORK ONLY.

ALL DIMENSIONS ARE IN MILLIMETERS UNLESS OTHERWISE SHOWN.

FOR REDUCED PLANS ORIGINAL SCALE IS IN MILLIMETERS 0 20 40 60 80

DGN FILE =>04-0120f1_0210R05.dgn
USERNAME =>llorico

CU 04251 | EA 0120F1

LAST REVISION 00-00-00
DATE PLOTTED => 11/9/2011
TIME PLOTTED => 5:31:21 PM

DIST	COUNTY	ROUTE	KILOMETER POST TOTAL PROJECT	SHEET No	TOTAL SHEETS
04	SF	80	13.2/13.9	210 S1R3	1204

REGISTERED ELECTRICAL ENGINEER 8-24-07 DATE

PLANS APPROVAL DATE

REGISTERED PROFESSIONAL ENGINEER MARCELL FUMIO TAKAKI No. E 8651 Exp. 9/30/2008 ELECTRICAL STATE OF CALIFORNIA

PB AMERICAS, Inc.
A Parsons Brinckerhoff Company
303 Second St., Suite 700N
San Francisco, CA 94107-1317

The State of California or its officers or agents shall not be responsible for the accuracy or completeness of electronic copies of this plan sheet.

To get to the web site, go to: http://www.dot.ca.gov

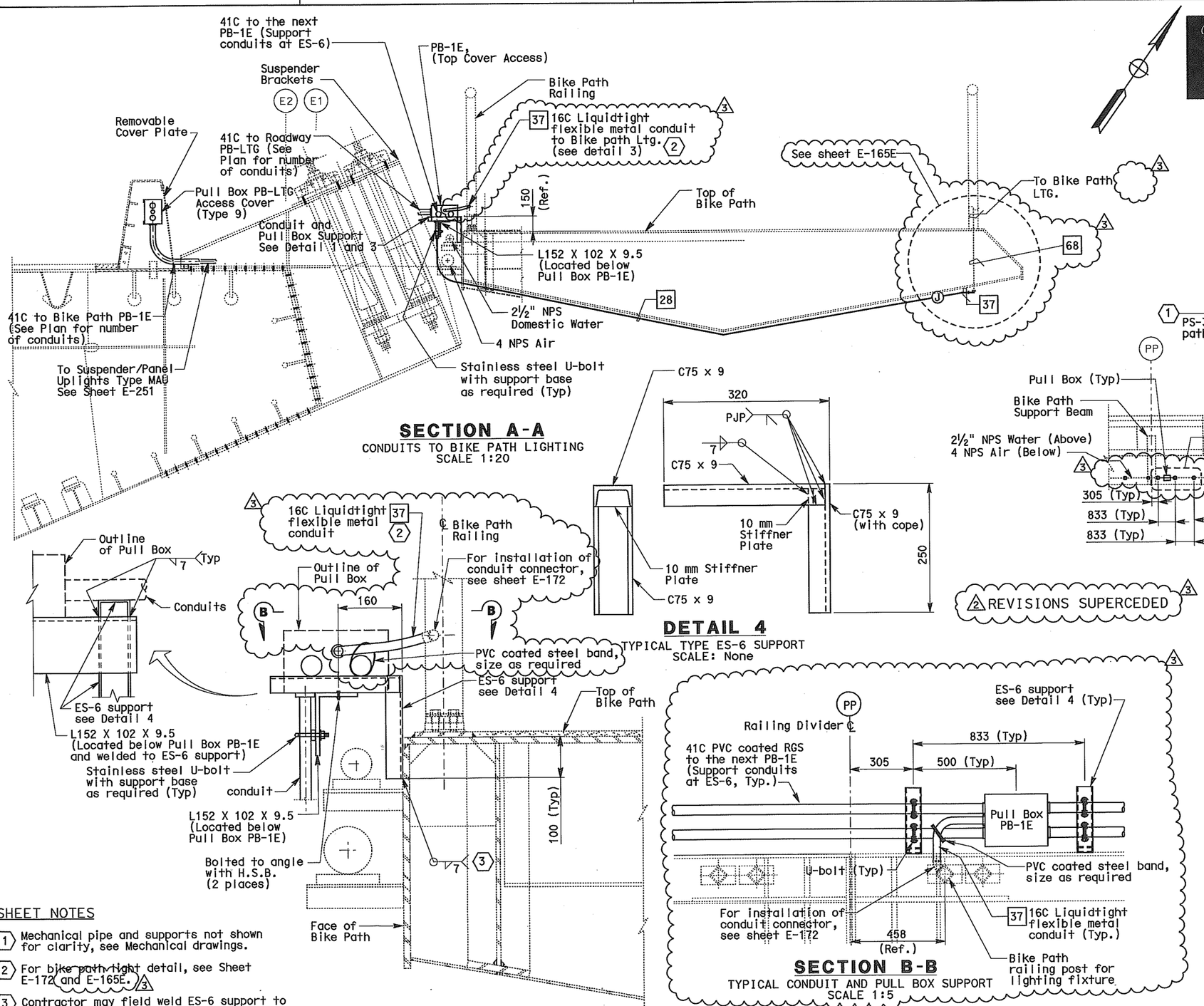

SECTION A-A
CONDUITS TO BIKE PATH LIGHTING
SCALE 1:20

DETAIL 4
TYPICAL TYPE ES-6 SUPPORT
SCALE: None

2 REVISIONS SUPERCEDED 3

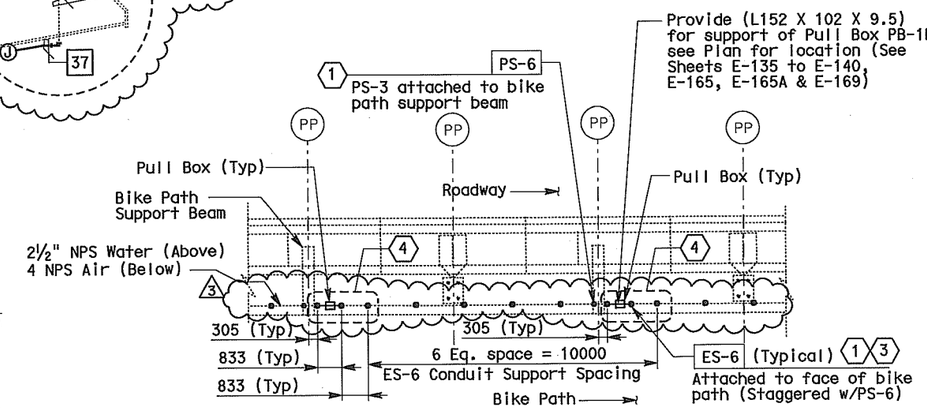

PLAN - DETAIL 1
TYPICAL CONDUIT SUPPORT
SCALE 1:100

SECTION - DETAIL 3
CONDUIT AND PULL BOX SUPPORT
SCALE 1:5

SECTION B-B
TYPICAL CONDUIT AND PULL BOX SUPPORT
SCALE 1:5

SHEET NOTES

1. Mechanical pipe and supports not shown for clarity, see Mechanical drawings.
2. For bike path light detail, see Sheet E-172 and E-165E. 3
3. Contractor may field weld ES-6 support to face of bike path.
4. Typical ES-6 support spacing where pull box PB-1E is installed.

REGISTERED PROFESSIONAL ENGINEER FADI WALIEDDINE No. 11465 Exp. 12/31/2009 ELECTRICAL STATE OF CALIFORNIA
FOR REVISION ONLY 1

REGISTERED PROFESSIONAL ENGINEER SYN YEE CHIN No. 18186 Exp. 09/30/2011 ELECTRICAL STATE OF CALIFORNIA
FOR REVISION ONLY 2 3

REQUEST FOR INFORMATION NOT ADDRESSED IN THIS CCO REMAIN IN FORCE

MARK	DATE	DESCRIPTIONS	BY	CH'D	CCO#
3	04/15/11	BIKE PATH CONDUIT	TW	RG	73
2	06/11/10	BIKE PATH CONDUIT	TW	RG	73
1	12/15/08	BIKE PATH DETAILS	TW	RG FW	99
0	02/19/08	ELECTRICAL MODIFICATIONS	MP EL	RR	42

REVISIONS

CONTRACT CHANGE ORDER NO. 73
SHEET 19 OF 52

DETAILS
SAS SUPERSTRUCTURE ROADWAY EASTBOUND
TYPICAL BIKE PATH PLANS AND SECTIONS
SCALE AS NOTED

E-165A

DATE	REVISED BY	DATE REVISED
2/07	EL	7/07 RR

CALCULATED/DESIGNED BY
CHECKED BY

DESIGN OVERSIGHT
BEHZAD GOLEMOHAMMADI

STATE OF CALIFORNIA - DEPARTMENT OF TRANSPORTATION
Caltrans

LAST REVISION 00-00-00
DATE PLOTTED => 18-APR-2011
TIME PLOTTED => 14:31

THIS PLAN ACCURATE FOR ELECTRICAL WORK ONLY.

ALL DIMENSIONS ARE IN MILLIMETERS UNLESS OTHERWISE SHOWN

FOR REDUCED PLANS ORIGINAL SCALE IS IN MILLIMETERS 0 20 40 60 80

DGN FILE =>04-0120f1_0210S01R03.dgn
USERNAME =>llorico

CU 04251 | EA 0120F1

DIST	COUNTY	ROUTE	KILOMETER POST TOTAL PROJECT	SHEET No	TOTAL SHEETS
04	SF	80	13.2/13.9	210 S2R2	1204

REGISTERED ELECTRICAL ENGINEER 10/01/08 DATE

PLANS APPROVAL DATE

REGISTERED PROFESSIONAL ENGINEER FADI WALIEDDINE No. 11465 Exp. 12/31/2009 ELECTRICAL STATE OF CALIFORNIA

PB POWER, Inc.
A Parsons Brinckerhoff Company
303 Second St., Suite 700N
San Francisco, CA 94107-1317

The State of California or its officers or agents shall not be responsible for the accuracy or completeness of electronic copies of this plan sheet.

Caltrans now has a web site! To get to the web site, go to http://www.dot.ca.gov

REGISTERED PROFESSIONAL ENGINEER SYN YEE CHIN No. 18186 Exp. 09/30/2011 ELECTRICAL STATE OF CALIFORNIA

Syn Yee Chin
FOR REVISION ONLY △2

REGISTERED PROFESSIONAL ENGINEER FADI WALIEDDINE No. 11465 Exp. 12/31/2009 ELECTRICAL STATE OF CALIFORNIA

FOR REVISION ONLY △1

SHEET NOTES:

(1) Install ES-6 support to provide support to pull box at the location shown.

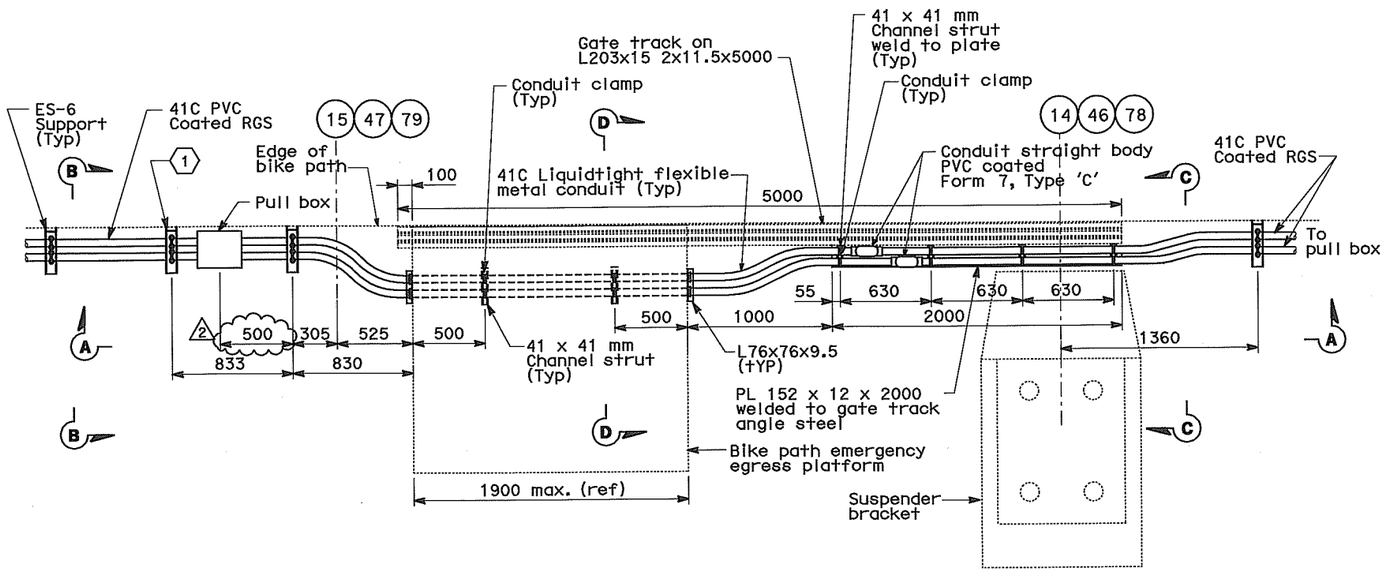

PARTIAL PLAN
SCALE 1:20
(Typical conduit installation)

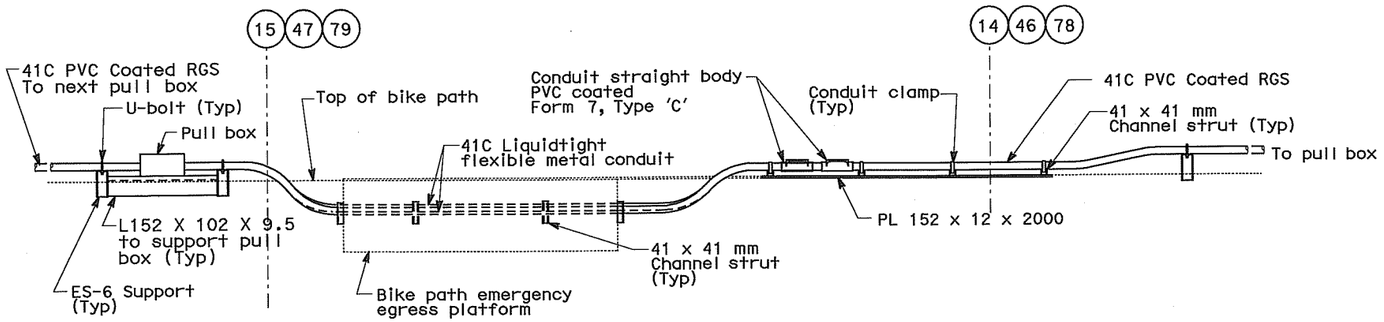

SECTION A-A
SCALE 1:20

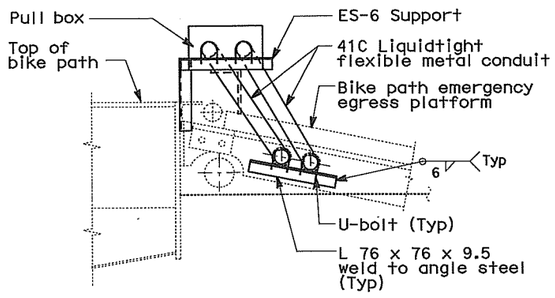

SECTION B-B
SCALE 1:10

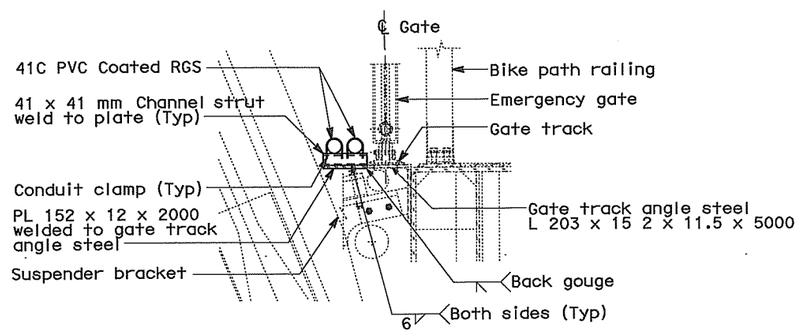

SECTION C-C
SCALE 1:10

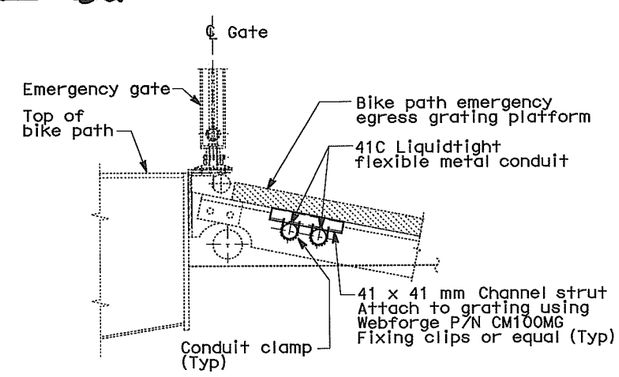

SECTION D-D
SCALE 1:10

DETAILS
SAS SUPERSTRUCTURE ROADWAY EASTBOUND BIKE PATH EMERGENCY EGRESS PLATFORM
SCALE AS NOTED

E-165B

THIS PLAN ACCURATE FOR ELECTRICAL WORK ONLY.

ALL DIMENSIONS ARE IN MILLIMETERS UNLESS OTHERWISE SHOWN

REQUEST FOR INFORMATION NOT ADDRESSED IN THIS CCO REMAIN IN FORCE

MARK	DATE	DESCRIPTIONS	BY	CH'D	CCO#
△2	06/11/10	BIKE PATH CONDUIT	TW	RG	73
△1	01/08/09	BIKE PATH DETAILS	RG	FW	99
△0	12/15/08	BIKE PATH DETAILS	RG	FW	99

REVISIONS

CONTRACT CHANGE ORDER NO. 73
SHEET 20 OF 52

DATE	REVISED BY	DATE REVISED

CALCULATED/DESIGNED BY
CHECKED BY

DESIGN OVERSIGHT
BEHZAD GOLEMOHAMMADI

STATE OF CALIFORNIA - DEPARTMENT OF TRANSPORTATION
Caltrans

LAST REVISION 00-00-00
DATE PLOTTED => 15-APR-2011
TIME PLOTTED => 13:21

FOR REDUCED PLANS ORIGINAL SCALE IS IN MILLIMETERS 0 20 40 60 80

DGN FILE =>04-0120f1_0210S02R02.dgn
USERNAME =>llorico

CU 04251 | EA 0120F1

DIST	COUNTY	ROUTE	KILOMETER POST TOTAL PROJECT	SHEET No	TOTAL SHEETS
04	SF	80	13.2/13.9	210 S3R1	1204

Syn Yee Chin 04/23/10
REGISTERED ELECTRICAL ENGINEER DATE

PLANS APPROVAL DATE

REGISTERED PROFESSIONAL ENGINEER SYN YEE CHIN No. 18186 Exp. 09/30/2011 ELECTRICAL STATE OF CALIFORNIA

PB AMERICAS, Inc.
A Parsons Brinckerhoff Company
303 Second St., Suite 700N
San Francisco, CA 94107-1317

The State of California or its officers or agents shall not be responsible for the accuracy or completeness of electronic copies of this plan sheet.

Caltrans now has a web site! To get to the web site, go to http://www.dot.ca.gov

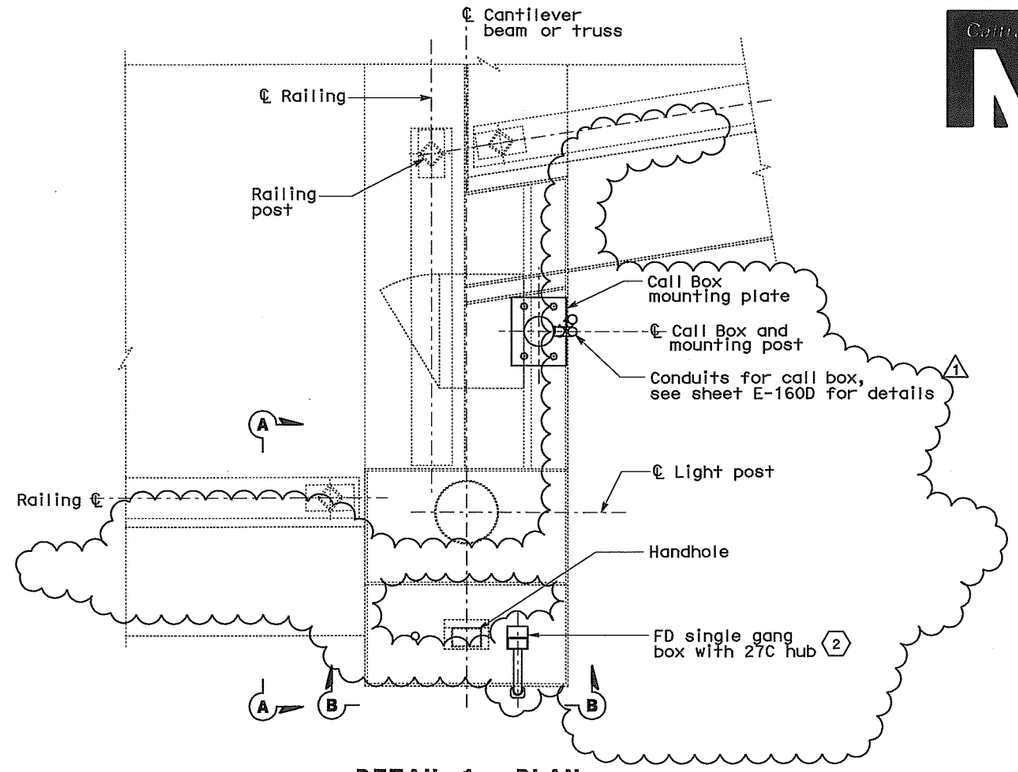

DETAIL 1 - PLAN
BELVEDERE LIGHT POST AT SOUTH SIDE OF BIKE PATH

SHEET NOTES:

1. Use threaded plug to cover spare hole for future use.
2. Contractor to ensure box installation is watertight.
3. Provide approximately 7 m of pigtails for power conductors for future termination to the belvedere light. Seal each conductor end to prevent water from entering the insulation. Pigtails shall be coiled and protected from damage and placed inside belvedere light post housing.

NOTES:

1. For location of bike path light fixtures and belvedere lights, see sheets E-135 through E-140.
2. All conduit connections shall be watertight.

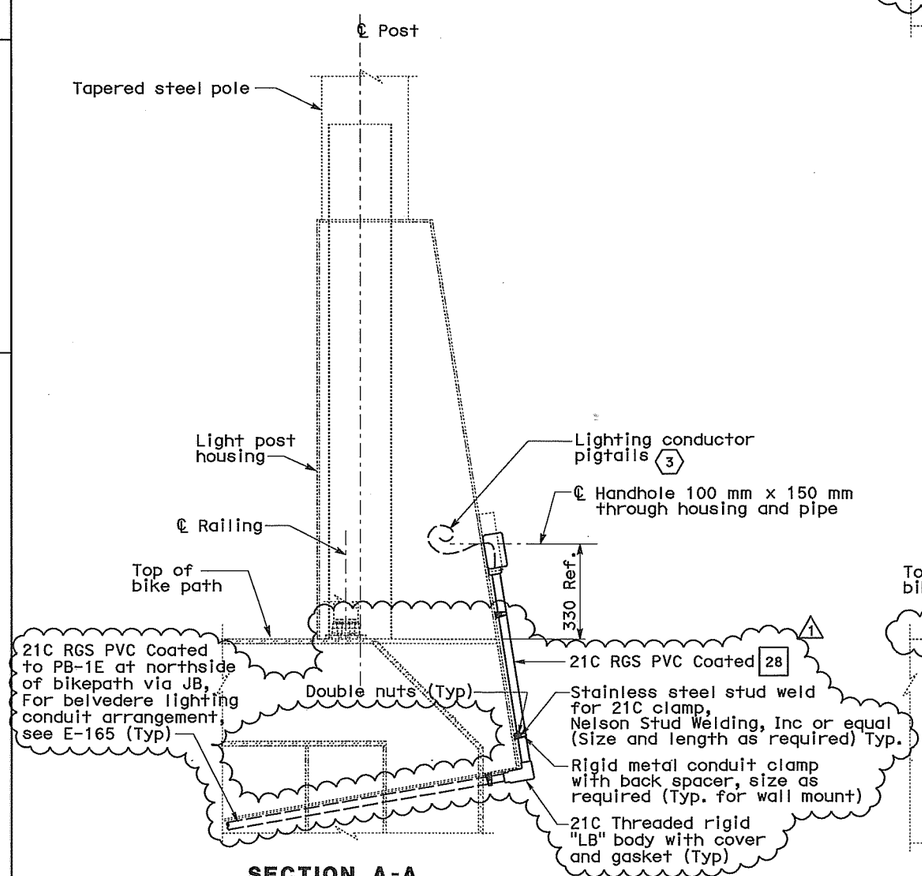

SECTION A-A

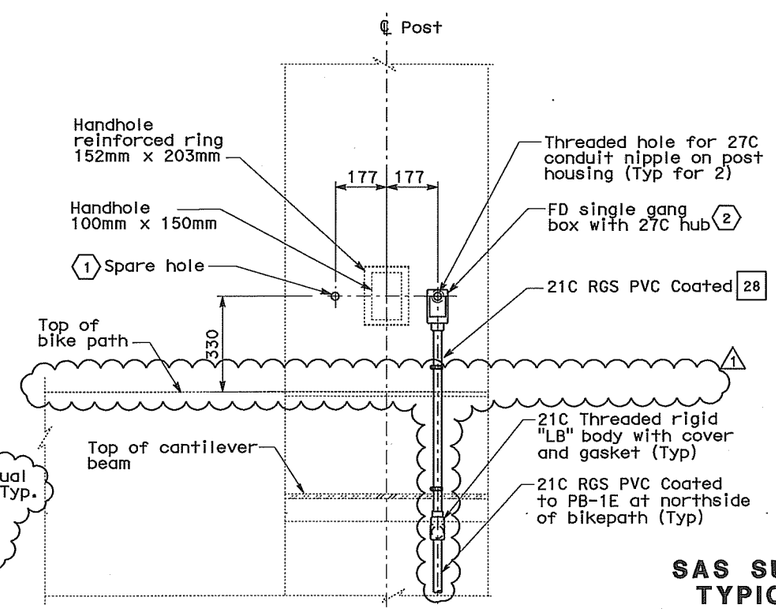

SECTION B-B

REQUEST FOR INFORMATION NOT ADDRESSED IN THIS CCO REMAIN IN FORCE					
1	03/24/11	BIKE PATH CONDUIT	TW	RG	73
0	06/11/10	BIKE PATH CONDUIT	TW	RG	73
MARK	DATE	DESCRIPTIONS	BY	CH'D	CCO#
		REVISIONS			

CONTRACT CHANGE ORDER NO. 73
SHEET 21 OF 52

DETAILS
SAS SUPERSTRUCTURE ROADWAY EASTBOUND TYPICAL BIKE PATH PLANS AND SECTIONS
SCALE: 1:10

E-165C

DESIGN OVERSIGHT: BEHZAD GOLEMOHAMMADI
CALCULATED/DESIGNED BY
CHECKED BY
REVISED BY
DATE REVISED
STATE OF CALIFORNIA - DEPARTMENT OF TRANSPORTATION
Caltrans

THIS PLAN ACCURATE FOR ELECTRICAL WORK ONLY.

ALL DIMENSIONS ARE IN MILLIMETERS UNLESS OTHERWISE SHOWN

FOR REDUCED PLANS ORIGINAL SCALE IS IN MILLIMETERS 0 20 40 60 80

DGN FILE =>04-0120f1_0210S03R01.dgn
USERNAME =>llorico

CU 04251 | EA 0120F1

LAST REVISION 00-00-00
DATE PLOTTED => 15-APR-2011
TIME PLOTTED => 13:22

DIST	COUNTY	ROUTE	KILOMETER POST TOTAL PROJECT	SHEET No	TOTAL SHEETS
04	SF	80	13.2/13.9	210 S4R1	1204

Syn Yee Chin 04/23/10
REGISTERED ELECTRICAL ENGINEER DATE

PLANS APPROVAL DATE

REGISTERED PROFESSIONAL ENGINEER SYN YEE CHIN No. 18186 Exp. 09/30/2011 ELECTRICAL STATE OF CALIFORNIA

PB AMERICAS, Inc.
A Parsons Brinckerhoff Company
303 Second St., Suite 700N
San Francisco, CA 94107-1317

The State of California or its officers or agents shall not be responsible for the accuracy or completeness of electronic copies of this plan sheet.

Caltrans now has a web site! To get to the web site, go to http://www.dot.ca.gov

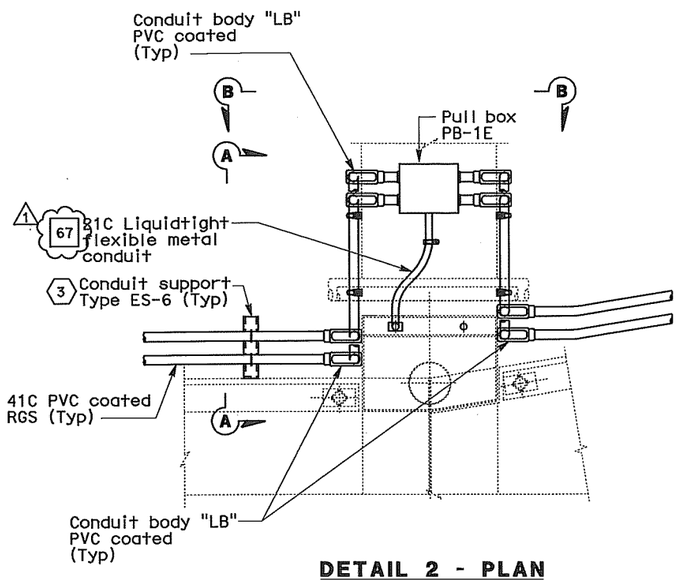

DETAIL 2 - PLAN

BELVEDERE LIGHT POST AT NORTH SIDE OF BIKE PATH

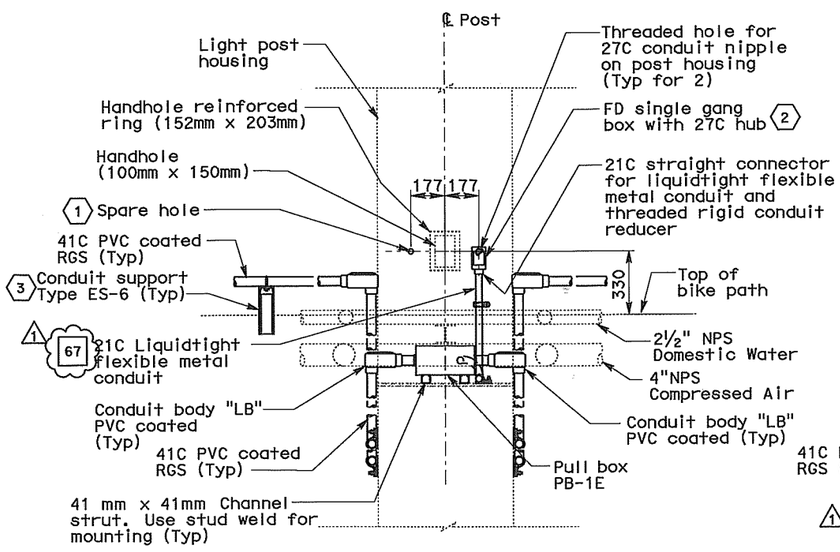

SECTION B-B

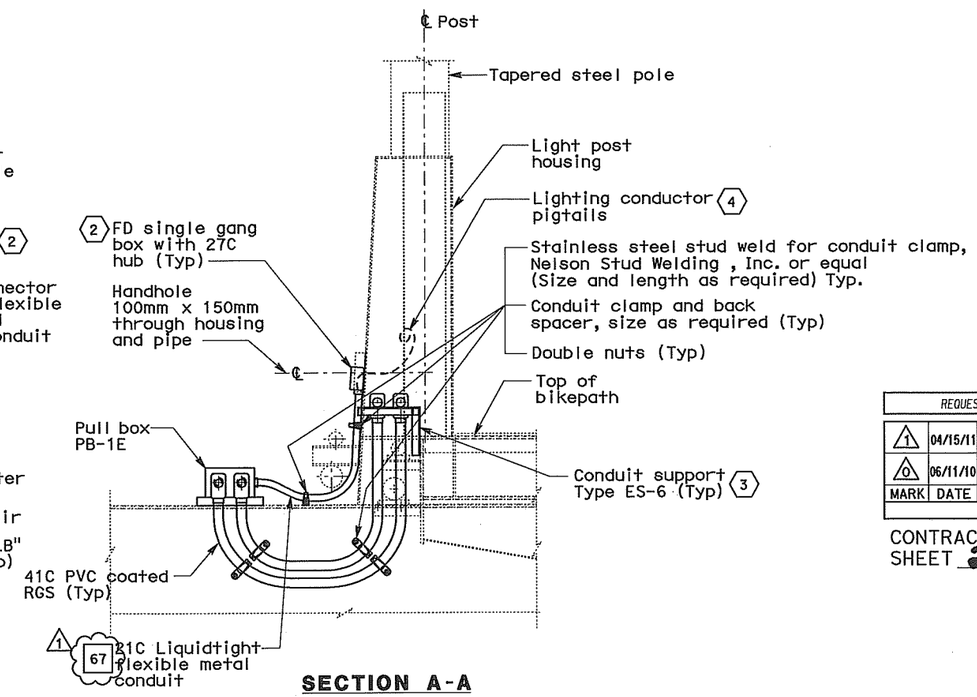

SECTION A-A

SHEET NOTES:

1. Use threaded plug to cover spare hole for future use.
2. Contractor to ensure box installation is watertight.
3. For conduit support detail and location, see sheet E-165A.
4. Provide approximately 7 m of pigtails for power conductors for future termination to the belvedere light. Seal each conductor end to prevent water from entering the insulation. Pigtails shall be coiled and protected from damage and placed inside belvedere light post housing.

NOTES:

1. For location of bike path light fixtures and belvedere lights, see sheets E-135 through E-140.
2. All conduit connections shall be watertight.

REQUEST FOR INFORMATION NOT ADDRESSED IN THIS CCO REMAIN IN FORCE

MARK	DATE	DESCRIPTIONS	BY	CH'D	CCO#
1	04/15/11	BIKE PATH CONDUIT	TW	RG	73
0	06/11/10	BIKE PATH CONDUIT	TW	RG	73

REVISIONS

CONTRACT CHANGE ORDER NO. 73
SHEET 22 OF 52

DETAILS
SAS SUPERSTRUCTURE ROADWAY EASTBOUND TYPICAL BIKE PATH PLANS AND SECTIONS

SCALE: 1:15

E-165D

DATE	REVISED BY	DATE REVISED

CALCULATED/DESIGNED BY
CHECKED BY

DESIGN OVERSIGHT
BEHZAD GOLEMOHAMMADI

STATE OF CALIFORNIA - DEPARTMENT OF TRANSPORTATION
Caltrans

LAST REVISION 00-00-00
DATE PLOTTED => 18-APR-2011
TIME PLOTTED => 09:14

THIS PLAN ACCURATE FOR ELECTRICAL WORK ONLY.

ALL DIMENSIONS ARE IN MILLIMETERS UNLESS OTHERWISE SHOWN

FOR REDUCED PLANS ORIGINAL SCALE IS IN MILLIMETERS 0 20 40 60 80

DGN FILE =>04-0120f1_0210S04R01.dgn
USERNAME =>llorico

CU 04251

EA 0120F1

DIST	COUNTY	ROUTE	KILOMETER POST TOTAL PROJECT	SHEET No	TOTAL SHEETS
04	SF	80	13.2/13.9	210 S05R2	1204

Syn Yee Chin 04/23/10
REGISTERED ELECTRICAL ENGINEER DATE

PLANS APPROVAL DATE

REGISTERED PROFESSIONAL ENGINEER SYN YEE CHIN No. 18186 Exp. 09/30/2011 ELECTRICAL STATE OF CALIFORNIA

PB AMERICAS, Inc.
A Parsons Brinckerhoff Company
303 Second St., Suite 700N
San Francisco, CA 94107-1317

The State of California or its officers or agents shall not be responsible for the accuracy or completeness of electronic copies of this plan sheet.

Caltrans now has a web site! To get to the web site, go to http://www.dot.ca.gov

Caltrans Metric

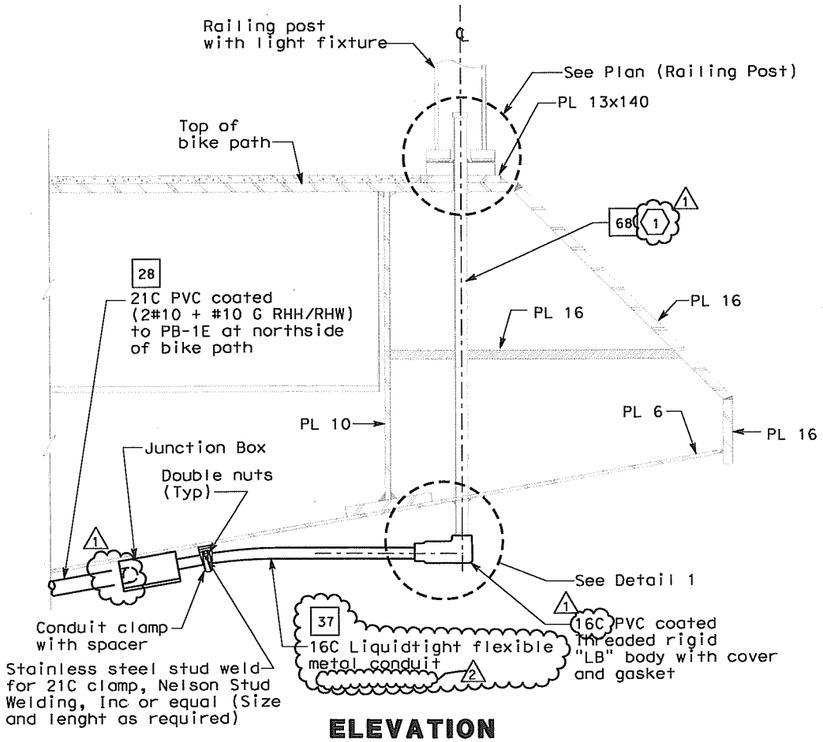

ELEVATION

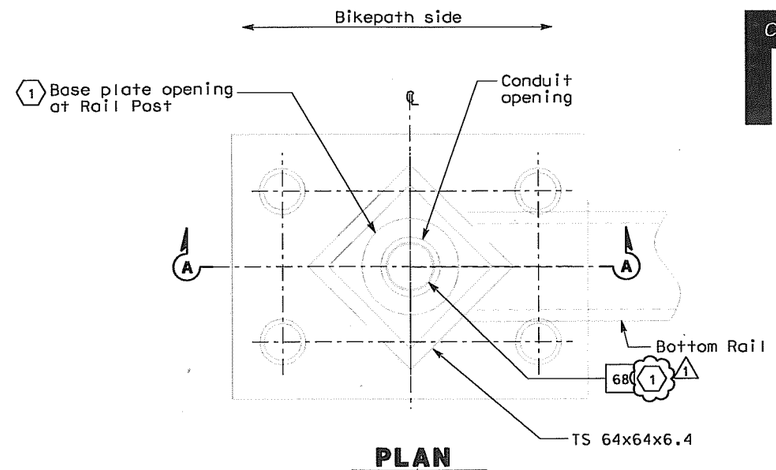

PLAN
RAILING POST

SHEET NOTES:

1 For conduit installation and openings, see Structural Plans. 1

REGISTERED PROFESSIONAL ENGINEER SYN YEE CHIN No. 18186 Exp. 09/30/2011 ELECTRICAL STATE OF CALIFORNIA

Syn Yee Chin
FOR REVISION ONLY
1 2

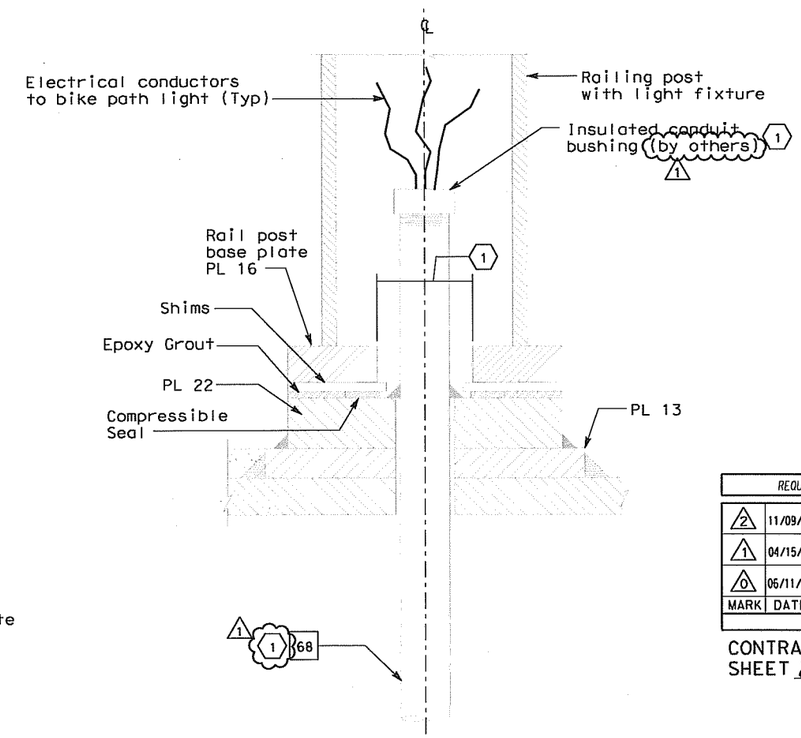

SECTION A-A

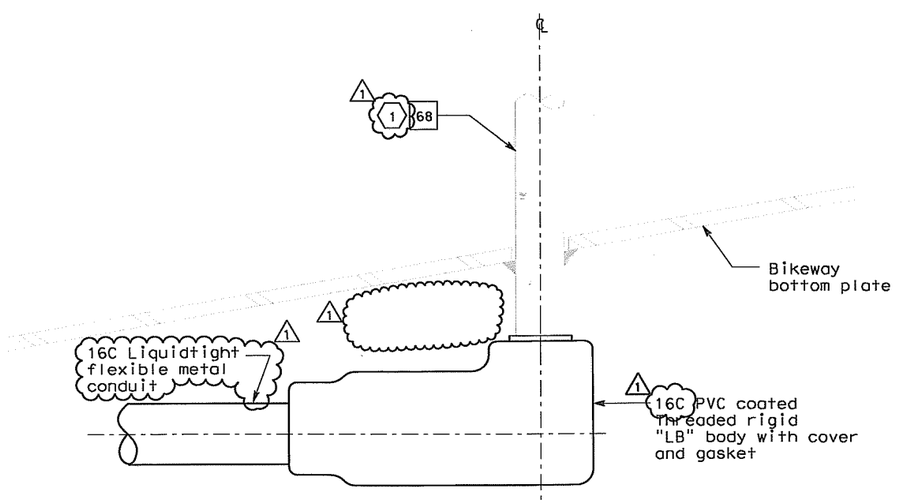

DETAIL 1
CONDUIT PENETRATION DETAIL

REQUEST FOR INFORMATION NOT ADDRESSED IN THIS CCO REMAIN IN FORCE					
2	11/09/11	BIKE PATH CONDUIT	TW	NK	73
1	04/15/11	BIKE PATH CONDUIT	TW	RG	73
0	06/11/10	BIKE PATH CONDUIT	TW	RG	73
MARK	DATE	DESCRIPTIONS	BY	CH'D	CCO#
		REVISIONS			

CONTRACT CHANGE ORDER NO. 73
SHEET 23 OF 52

DETAILS
SAS SUPERSTRUCTURE ROADWAY EASTBOUND
TYPICAL BIKE PATH PLANS AND SECTIONS
SCALE: 1:25

E-165E

THIS PLAN ACCURATE FOR ELECTRICAL WORK ONLY.

ALL DIMENSIONS ARE IN MILLIMETERS UNLESS OTHERWISE SHOWN

DATE	BY	CHECKED BY	REVISED BY	DATE REVISED
XX/10	XX	XX/10		

CALCULATED/DESIGNED BY XX
DESIGN OVERSIGHT BEHZAD GOLEMOHAMMADI

STATE OF CALIFORNIA - DEPARTMENT OF TRANSPORTATION
Caltrans

LAST REVISION 00-00-00
DATE PLOTTED => 11/9/2011
TIME PLOTTED => 5:01:37 PM

FOR REDUCED PLANS ORIGINAL SCALE IS IN MILLIMETERS 0 20 40 60 80

DGN FILE =>04-0120f1_0210S05R02.dgn
USERNAME =>llorico

CU 04251

EA 0120F1

DIST	COUNTY	ROUTE	KILOMETER POST TOTAL PROJECT	SHEET No	TOTAL SHEETS
04	SF	80	13.2/13.9	210 S6	1204

Syn Yee Chin 04/23/10
REGISTERED ELECTRICAL ENGINEER DATE

REGISTERED PROFESSIONAL ENGINEER
SYN YEE CHIN
No. 18186
Exp. 09/30/2011
ELECTRICAL
STATE OF CALIFORNIA

PLANS APPROVAL DATE

PB AMERICAS, Inc.
A Parsons Brinckerhoff Company
303 Second St., Suite 700N
San Francisco, CA 94107-1317

The State of California or its officers or agents shall not be responsible for the accuracy or completeness of electronic copies of this plan sheet.

Caltrans now has a web site! To get to the web site, go to http://www.dot.ca.gov

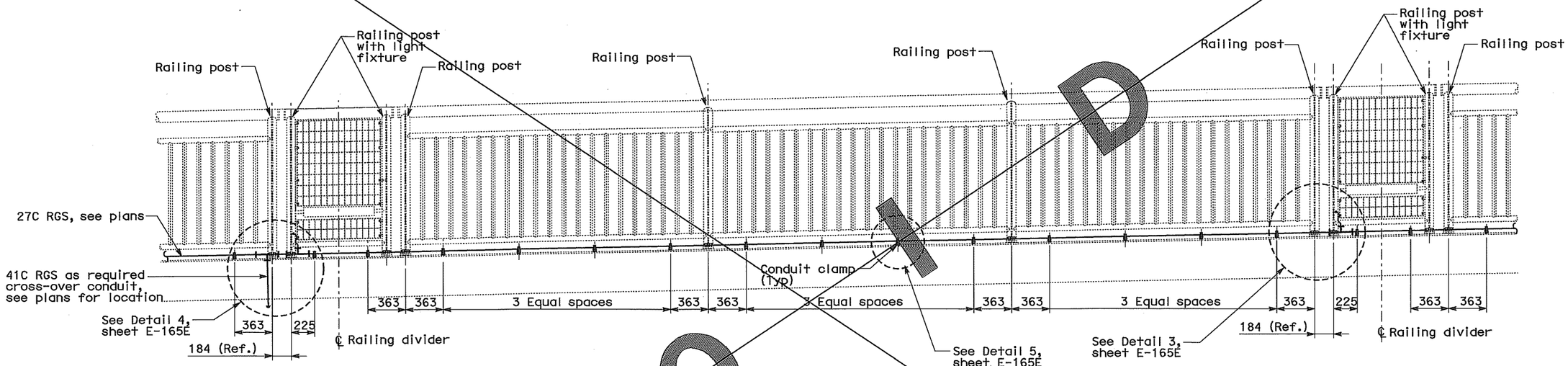

DETAIL 1 - ELEVATION

TYPICAL LIGHTING CONDUIT SUPPORT AT SOUTH SIDE OF THE BIKE PATH
SCALE 1:20

NOTES:

1. For location of bike path light fixtures and belvedere lights, see sheets E-135 through E-140.
2. All conduit connections shall be watertight.
3. For bike path railing layout and details, see Structural Plans.

REQUEST FOR INFORMATION NOT ADDRESSED IN THIS CCO REMAIN IN FORCE

MARK	DATE	DESCRIPTIONS	BY	CH'D	CCO#
0	03/24/11	BIKE PATH CONDUIT	TW	RG	73

REVISIONS

CONTRACT CHANGE ORDER NO. 73
SHEET 24 OF 52

DETAILS
SAS SUPERSTRUCTURE ROADWAY EASTBOUND
TYPICAL BIKE PATH PLANS AND SECTIONS

SCALE AS NOTED

E-165F

DATE	REVISED BY	DATE REVISED

CALCULATED/DESIGNED BY
CHECKED BY

DESIGN OVERSIGHT
BEHZAD GOLEMOHAMMADI

STATE OF CALIFORNIA - DEPARTMENT OF TRANSPORTATION
Caltrans

THIS PLAN ACCURATE FOR ELECTRICAL WORK ONLY.

ALL DIMENSIONS ARE IN MILLIMETERS UNLESS OTHERWISE SHOWN

FOR REDUCED PLANS ORIGINAL SCALE IS IN MILLIMETERS 0 20 40 60 80

DGN FILE =>04-0120f1_0210S06.dgn
USERNAME =>llorico

CU 04251
EA 0120F1

LAST REVISION 00-00-00
DATE PLOTTED => 15-APR-2011
TIME PLOTTED => 13:22

DIST	COUNTY	ROUTE	KILOMETER POST TOTAL PROJECT	SHEET NO.	TOTAL SHEETS
04	SF	80	13.2/13.9	213R2	1204

REGISTERED ENGINEER-CIVIL

12-6-04
PLANS APPROVAL DATE

REGISTERED PROFESSIONAL ENGINEER T. W. SPARKS No. E16039 Exp. 9-30-11 ELECTRICAL STATE OF CALIFORNIA

The State of California or its officers or agents shall not be responsible for the accuracy or completeness of electronic copies of this plan sheet.

T.Y. LIN / MOFFATT & NICHOL
825 BATTERY STREET
SAN FRANCISCO, CA 94111

Caltrans now has a web site! To get to the web site, go to: http://www.dot.ca.gov

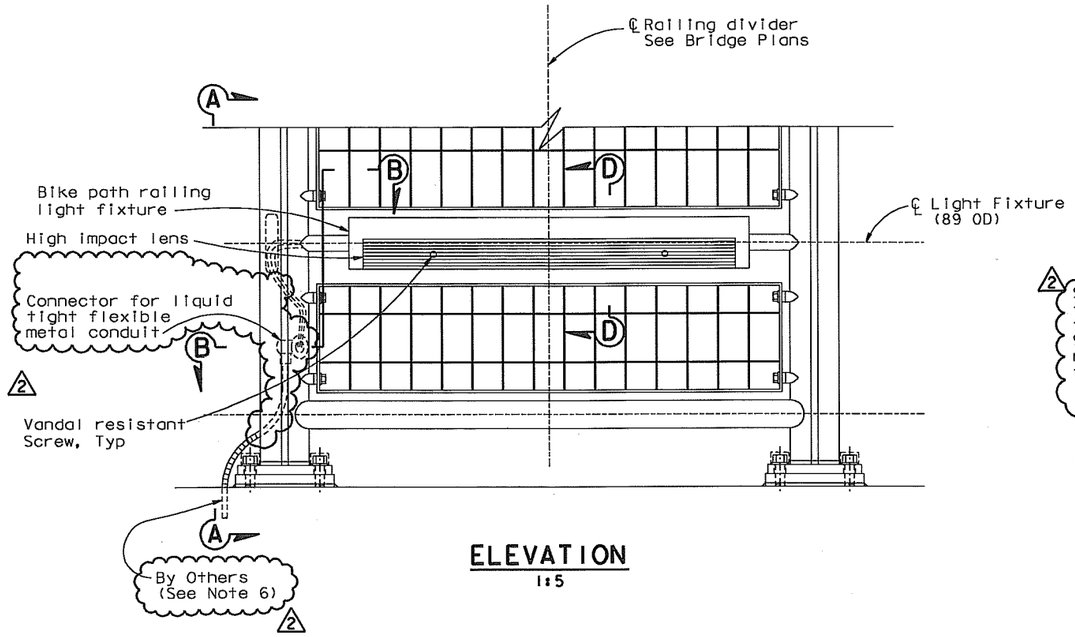

ELEVATION
1:5

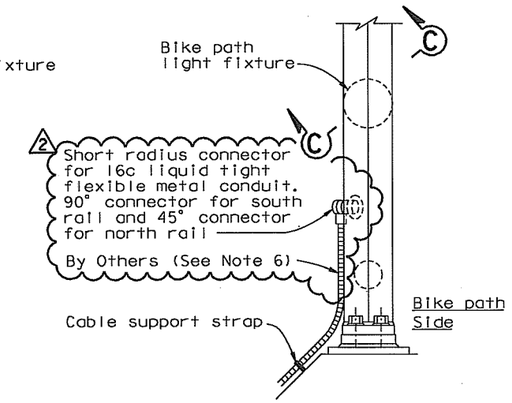

SECTION A-A
1:5

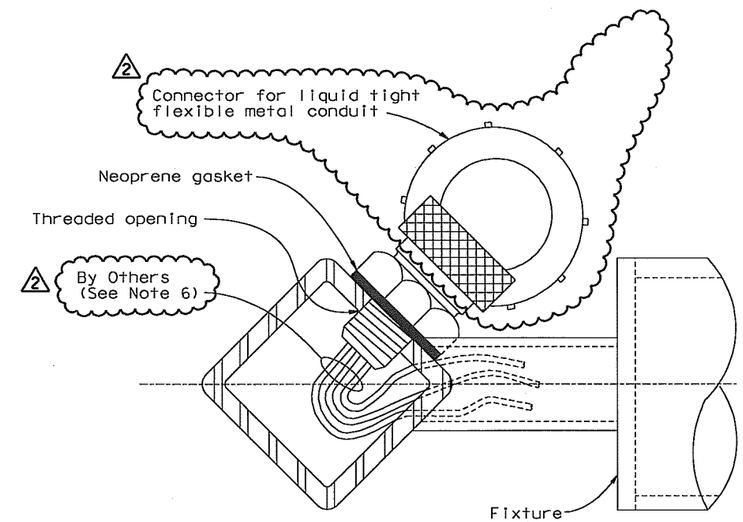

SECTION B-B
1:1

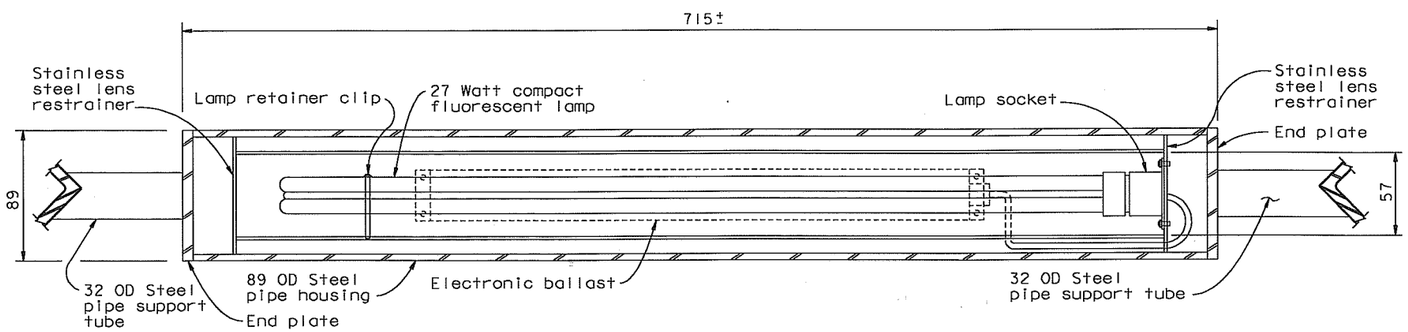

SECTION C-C
1:2

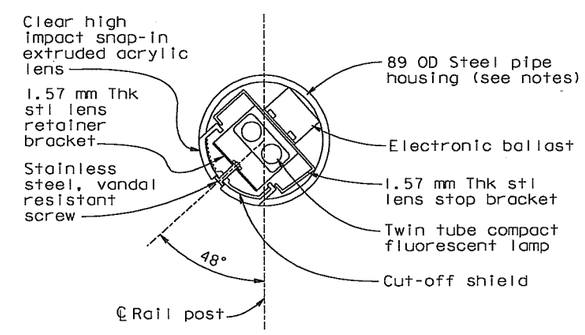

SECTION D-D
1:2

NOTES:

1. All metal (Except stainless steel) parts of railing light assembly shall be coated, see special provisions.
2. Refer to structural plans for railing details.
3. Light fixtures shall be parallel to top of bike path.
4. Light fixture support tube shall be welded to vertical posts.
5. All exposed welds shall be ground smooth.
6. For Details not shown, see "Typical Bikepath Plans and Sections" sheets in the Roadway Plans.

CONTRACT CHANGE ORDER NO. 73
SHEET 25 OF 52

REQUESTS FOR INFORMATION NOT ADDRESSED IN THIS CCO REMAIN IN FORCE

MARK	DATE	DESCRIPTIONS	BY	CH'D	CCO#
2	05/07/10	BIKEPATH CONDUIT	TS	JB	73
1	08/28/09	BIKEPATH DETAILS	TS	JB	99

REVISIONS

DETAILS
SAS SUPERSTRUCTURE ROADWAY EASTBOUND
TYPICAL BIKE PATH LIGHTING

SCALE AS NOTED

ALL DIMENSIONS ARE IN MILLIMETERS UNLESS OTHERWISE SHOWN.

E-172

CALCULATED/DESIGNED BY	GAM	DATE 10/00	REVISED BY	DATE REVISED
CHECKED BY	TYL	10/00		

DESIGN OVERSIGHT
BOB ZANDIPOUR

STATE OF CALIFORNIA - DEPARTMENT OF TRANSPORTATION
Caltrans

SAS STRUCTURE

LAST REVISION 04-19-00 | DATE PLOTTED => 06 MAY 2010 | TIME PLOTTED => 09:08:00

FOR REDUCED PLANS ORIGINAL SCALE IN MILLIMETERS 0 20 40 60 80

FILE => I:\bb\04-012001\sas\contract plans and cco\cco\cco#73\2-revision 05-07-10\dgn\40120fla72.dgn
USERNAME => arivera

CU 04251 | EA 01201

DIST	COUNTY	ROUTE	KILOMETER POST TOTAL PROJECT	SHEET No	TOTAL SHEETS
04	SF	80	13.2/13.9	355 R3	1204

REGISTERED ELECTRICAL ENGINEER 12/19/02 DATE

12-6-04
PLANS APPROVAL DATE

REGISTERED PROFESSIONAL ENGINEER JENS ERLINGSSON No. 8249 Exp. 9/30/06 ELECTRICAL STATE OF CALIFORNIA

PB POWER, Inc.
A Parsons Brinckerhoff Company
303 Second St., Suite 700N
San Francisco, CA 94107-1317

The State of California or its officers or agents shall not be responsible for the accuracy or completeness of electronic copies of this plan sheet.

Caltrans now has a web site! To get to the web site, go to http://www.dot.ca.gov

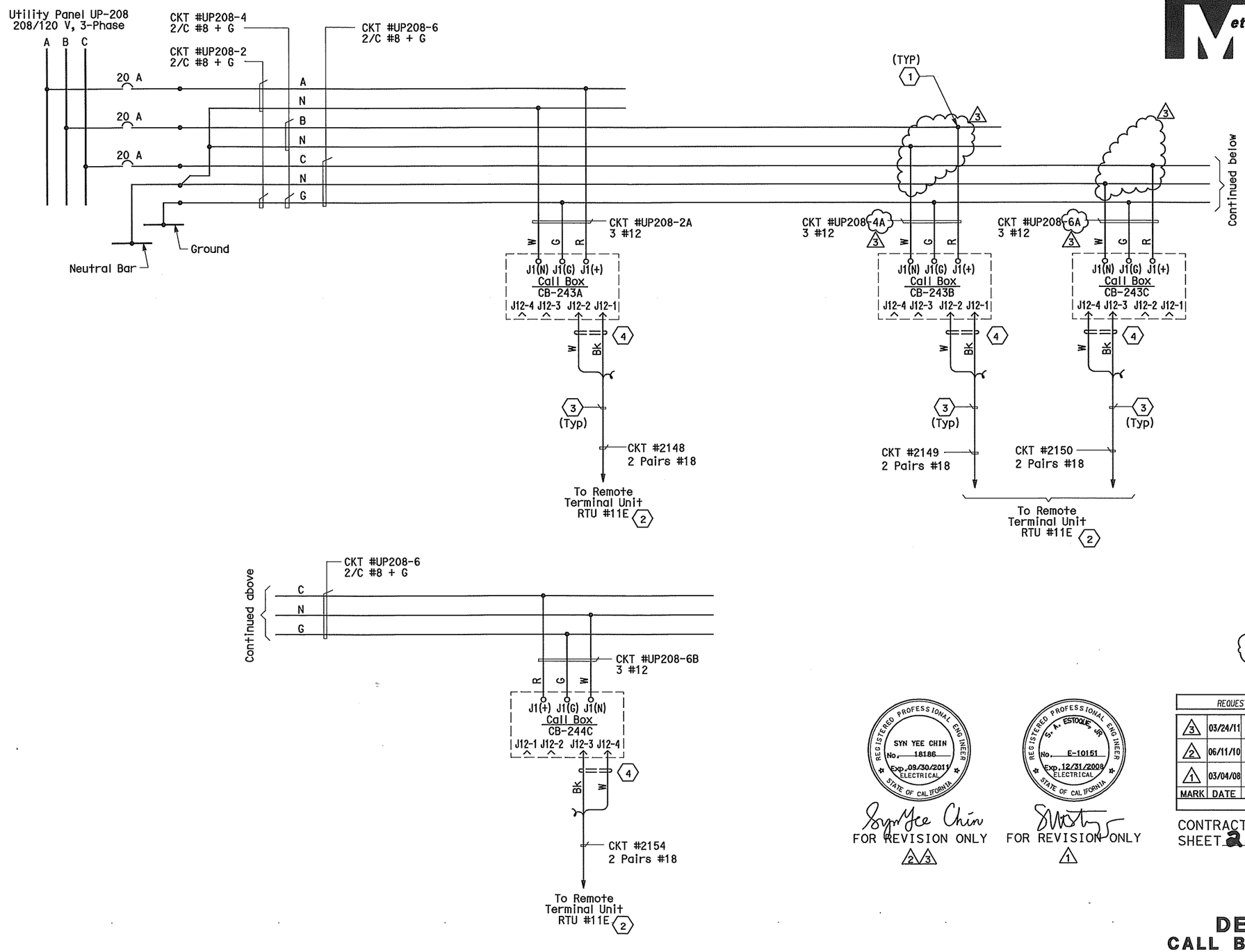

EASTBOUND SAS SUPERSTRUCTURE

SHEET NOTES:

1. Conductors spliced inside PB-Ltg.
2. For continuation, see RTU #11E connection diagrams sheet E-333.
3. Data cable 1-2 pairs #18 shielded with overall shield. Coil and tape end of pair #2 inside Call Box.
4. The Contractor shall install resistors, approximately equal to the impedance (Zo) of the twised pairs, at the extreme ends of the multidrop network.

NOTE:

1. References:
   - For panel schedules, see sheets E-154.
   - For circuit and conduit/cable tray schedules, see sheets starting at E-401.
   - For call boxes schedule, see sheet E-397.

2 REVISIONS SUPERCEDED 3

REGISTERED PROFESSIONAL ENGINEER SYN YEE CHIN No. 18186 Exp. 09/30/2011 ELECTRICAL STATE OF CALIFORNIA

Syn Yee Chin
FOR REVISION ONLY 2 3

REGISTERED PROFESSIONAL ENGINEER S. A. ESTOQUE, JR. No. E-10151 Exp. 12/31/2008 ELECTRICAL STATE OF CALIFORNIA

FOR REVISION ONLY 1

REQUEST FOR INFORMATION NOT ADDRESSED IN THIS CCO REMAIN IN FORCE					
3	03/24/11	BIKE PATH CONDUIT	TW	RG	73
2	06/11/10	BIKE PATH CONDUIT	TW	RG	73
1	03/04/08	BARRIER MODIFICATIONS	JS BM	RG SE	44
MARK	DATE	DESCRIPTIONS	BY	CH'D	CCO#
		REVISIONS			

CONTRACT CHANGE ORDER NO. 73
SHEET 26 OF 52

DETAILS
CALL BOX SYSTEM
CALL BOX WIRING DIAGRAM
NO SCALE

E-400

THIS PLAN ACCURATE FOR ELECTRICAL WORK ONLY.

STATE OF CALIFORNIA - DEPARTMENT OF TRANSPORTATION
Caltrans

DESIGN OVERSIGHT
BEHZAD GOLEMOHAMMADI

CALCULATED/DESIGNED BY EJL DATE 09/01 REVISED BY
CHECKED BY EDC 11/01 DATE REVISED

FOR REDUCED PLANS ORIGINAL SCALE IS IN MILLIMETERS 0 20 40 60 80

DGN FILE =>04-0120f1_0355R03.dgn
USERNAME =>llorico

CU 04251 EA 0120F1

LAST REVISION 00-00-00
DATE PLOTTED => 15-APR-2011
TIME PLOTTED => 13:22

DIST	COUNTY	ROUTE	KILOMETER POST TOTAL PROJECT	SHEET No	TOTAL SHEETS
04	SF	80	13.2/13.9	366 R3	1204

Jens Erlingsson 12/19/02
REGISTERED ELECTRICAL ENGINEER DATE

12-6-04
PLANS APPROVAL DATE

REGISTERED PROFESSIONAL ENGINEER JENS ERLINGSSON No. 8249 Exp. 9/30/06 ELECTRICAL STATE OF CALIFORNIA

PB POWER, Inc.
A Parsons Brinckerhoff Company
303 Second St., Suite 700N
San Francisco, CA 94107-1317

The State of California or its officers or agents shall not be responsible for the accuracy or completeness of electronic copies of this plan sheet.

Caltrans now has a web site! To get to the web site, go to http://www.dot.ca.gov

Caltrans Metric

REQUEST FOR INFORMATION NOT ADDRESSED IN THIS CCO REMAIN IN FORCE

MARK	DATE	DESCRIPTIONS	BY	CH'D	CCO#
3	03/24/11	BIKE PATH CONDUIT	TW	RG	73
2	06/11/10	BIKE PATH CONDUIT	TW	RG	73
1	03/18/10	WEST END BARRIER CONDUIT	RG	DO	44S1

REVISIONS

CONTRACT CHANGE ORDER NO. 73
SHEET 27 OF 52

REGISTERED PROFESSIONAL ENGINEER DAVID H. OTO No. 10699 Exp. 06/30/2011 ELECTRICAL STATE OF CALIFORNIA 1

FOR REVISION ONLY

REGISTERED PROFESSIONAL ENGINEER SYN YEE CHIN No. 18186 Exp. 09/30/2011 ELECTRICAL STATE OF CALIFORNIA 2 3

Syn Yee Chin
FOR REVISION ONLY

2 REVISIONS SUPERCEDED 3

CONDUIT DATA

Conduit No	Reference	Size	Type	Total Fill (mm²)	Allowable Fill (mm²)	Included Cable No.	Conductor Type
2052	E-114	41	RGS conduit	325.65	534.55	UP104-6a-3	2 + 1 gnd #8,#10, 600 V, RHH/RHW Insulation
						UP104-6a-2	3 + 1 gnd #8,#10, 600 V, RHH/RHW Insulation
						UP104-9-2	2 + 1 gnd #8,#10, 600 V, RHH/RHW Insulation
2053	E-119	41	RGS conduit	325.65	534.55	UP104-6b-2	2 + 1 gnd #8,#10, 600 V, RHH/RHW Insulation
						UP104-9-1	2 + 1 gnd #8,#10, 600 V, RHH/RHW Insulation
						UP104-6b-1	3 + 1 gnd #8,#10, 600 V, RHH/RHW Insulation
2054	E-119	41	RGS conduit	356.30	534.55	UP104-9	1-2/C + gnd #10, 600 V, EPR Insulation
						UP104-6-1	3 + 1 gnd #8,#10, 600 V, RHH/RHW Insulation
						UP104-6-2	2 + 1 gnd #8,#10, 600 V, RHH/RHW Insulation
2055	E-115	41	RGS conduit	325.65	534.55	UP105-10a-1	3 + 1 gnd #8,#10, 600 V, RHH/RHW Insulation
						UP105-10a-3	2 + 1 gnd #8,#10, 600 V, RHH/RHW Insulation
						UP105-9-2	2 + 1 gnd #8,#10, 600 V, RHH/RHW Insulation
2056	E-115	41	RGS conduit	266.38	534.55	UP105-10a-1	3 + 1 gnd #8,#10, 600 V, RHH/RHW Insulation
						UP105-10a-2	3 + 1 gnd #8,#10, 600 V, RHH/RHW Insulation
2057	E-115	41	RGS conduit	325.65	534.55	UP105-10a-2	3 + 1 gnd #8,#10, 600 V, RHH/RHW Insulation
						UP105-10a-3	2 + 1 gnd #8,#10, 600 V, RHH/RHW Insulation
						UP105-9-2	2 + 1 gnd #8,#10, 600 V, RHH/RHW Insulation
2058	E-119	41	RGS conduit	325.65	534.55	UP105-10b-1	3 + 1 gnd #8,#10, 600 V, RHH/RHW Insulation
						UP105-10b-2	2 + 1 gnd #8,#10, 600 V, RHH/RHW Insulation
						UP105-9-1	2 + 1 gnd #8,#10, 600 V, RHH/RHW Insulation
2059	E-119	41	RGS conduit	456.88	534.55	UP105-10-1	3 + 1 gnd #8,#10, 600 V, RHH/RHW Insulation
						UP105-10-2	2 + 1 gnd #8,#10, 600 V, RHH/RHW Insulation
						UP105-9	1-2/C + gnd #8, 600 V, EPR Insulation
2060	E-116	41	RGS conduit	325.65	534.55	UP106-9-2	2 + 1 gnd #8,#10, 600 V, RHH/RHW Insulation
						UP106-6a-1	3 + 1 gnd #8,#10, 600 V, RHH/RHW Insulation
						UP106-6a-3	2 + 1 gnd #8,#10, 600 V, RHH/RHW Insulation
2061	E-116	41	RGS conduit	266.38	534.55	UP106-6a-1	3 + 1 gnd #8,#10, 600 V, RHH/RHW Insulation
						UP106-6a-2	3 + 1 gnd #8,#10, 600 V, RHH/RHW Insulation
2062	E-116	41	RGS conduit	325.65	534.55	UP106-6a-3	2 + 1 gnd #8,#10, 600 V, RHH/RHW Insulation
						UP106-6a-2	3 + 1 gnd #8,#10, 600 V, RHH/RHW Insulation
						UP106-9-2	2 + 1 gnd #8,#10, 600 V, RHH/RHW Insulation
2063	E-119	41	RGS conduit	325.65	534.55	UP106-6b-2	2 + 1 gnd #8,#10, 600 V, RHH/RHW Insulation
						UP106-6b-1	3 + 1 gnd #8,#10, 600 V, RHH/RHW Insulation
						UP106-9-1	2 + 1 gnd #8,#10, 600 V, RHH/RHW Insulation
2064	E-119	41	RGS conduit	456.88	534.55	UP106-9	1-2/C + gnd #8, 600 V, EPR Insulation
						UP106-6-2	2 + 1 gnd #8,#10, 600 V, RHH/RHW Insulation
						UP106-6-1	3 + 1 gnd #8,#10, 600 V, RHH/RHW Insulation
2065	E-119	41	RGS conduit	456.88	534.55	UP107-6-2	2 + 1 gnd #8,#10, 600 V, RHH/RHW Insulation
						UP107-6-1	3 + 1 gnd #8,#10, 600 V, RHH/RHW Insulation
						UP107-9	1-2/C + gnd #8, 600 V, EPR Insulation
2066	E-119	41	RGS conduit	325.65	534.55	UP107-6b-2	2 + 1 gnd #8,#10, 600 V, RHH/RHW Insulation
						UP107-6b-1	3 + 1 gnd #8,#10, 600 V, RHH/RHW Insulation
						UP107-9-1	2 + 1 gnd #8,#10, 600 V, RHH/RHW Insulation
2067	E-117	41	RGS conduit	325.65	534.55	UP107-9-2	2 + 1 gnd #8,#10, 600 V, RHH/RHW Insulation
						UP107-6a-3	2 + 1 gnd #8,#10, 600 V, RHH/RHW Insulation
						UP107-6a-1	3 + 1 gnd #8,#10, 600 V, RHH/RHW Insulation
2068	E-117	41	RGS conduit	266.38	534.55	UP107-6a-2	3 + 1 gnd #8,#10, 600 V, RHH/RHW Insulation
						UP107-6a-1	3 + 1 gnd #8,#10, 600 V, RHH/RHW Insulation
2069	E-117	41	RGS conduit	325.65	534.55	UP107-6a-3	2 + 1 gnd #8,#10, 600 V, RHH/RHW Insulation
						UP107-6a-2	3 + 1 gnd #8,#10, 600 V, RHH/RHW Insulation
						UP107-9-2	2 + 1 gnd #8,#10, 600 V, RHH/RHW Insulation
2070	E-119	41	RGS conduit	325.65	534.55	UP107-6c-2	2 + 1 gnd #8,#10, 600 V, RHH/RHW Insulation
						UP107-6c-1	3 + 1 gnd #8,#10, 600 V, RHH/RHW Insulation
						UP107-9-3	2 + 1 gnd #8,#10, 600 V, RHH/RHW Insulation
2071	E-119	41	RGS conduit	325.65	534.55	UP108-10a-2	2 + 1 gnd #8,#10, 600 V, RHH/RHW Insulation
						UP108-10a-1	3 + 1 gnd #8,#10, 600 V, RHH/RHW Insulation
						UP108-9-5	2 + 1 gnd #8,#10, 600 V, RHH/RHW Insulation
2072	E-119	41	RGS conduit	325.65	534.55	UP108-9-4	2 + 1 gnd #8,#10, 600 V, RHH/RHW Insulation
						UP108-10b-2	2 + 1 gnd #8,#10, 600 V, RHH/RHW Insulation
						UP108-10b-1	3 + 1 gnd #8,#10, 600 V, RHH/RHW Insulation

CONDUIT DATA

Conduit No	Reference	Size	Type	Total Fill (mm²)	Allowable Fill (mm²)	Included Cable No.	Conductor Type
2073	E-119	41	RGS conduit	325.65	534.55	UP108-9-3	2 + 1 gnd #8,#10, 600 V, RHH/RHW Insulation
						UP108-10-2	2 + 1 gnd #8,#10, 600 V, RHH/RHW Insulation
	E-118					UP108-10-1	3 + 1 gnd #8,#10, 600 V, RHH/RHW Insulation
2074		41	RGS conduit	325.65	534.55	UP108-12a-3	2 + 1 gnd #8,#10, 600 V, RHH/RHW Insulation
						UP108-12a-1	3 + 1 gnd #8,#10, 600 V, RHH/RHW Insulation
	E-118					UP108-9-2	2 + 1 gnd #8,#10, 600 V, RHH/RHW Insulation
2075		41	RGS conduit	266.38	534.55	UP108-12a-2	3 + 1 gnd #8,#10, 600 V, RHH/RHW Insulation
						UP108-12a-1	3 + 1 gnd #8,#10, 600 V, RHH/RHW Insulation
				325.65	534.55	UP108-9-2	2 + 1 gnd #8,#10, 600 V, RHH/RHW Insulation
						UP108-12a-2	3 + 1 gnd #8,#10, 600 V, RHH/RHW Insulation
2076	E-118	41	RGS conduit			UP108-12a-3	2 + 1 gnd #8,#10, 600 V, RHH/RHW Insulation
				325.65	534.55	UP108-12b-2	2 + 1 gnd #8,#10, 600 V, RHH/RHW Insulation
						UP108-12b-1	3 + 1 gnd #8,#10, 600 V, RHH/RHW Insulation
2077	E-119	41	RGS conduit			UP108-9-1	2 + 1 gnd #8,#10, 600 V, RHH/RHW Insulation
				456.88	534.55	UP108-12-2	2 + 1 gnd #8,#10, 600 V, RHH/RHW Insulation
						UP108-12-1	3 + 1 gnd #8,#10, 600 V, RHH/RHW Insulation
2078	E-119	41	RGS conduit			UP108-9	1-2/C + gnd #8, 600 V, EPR Insulation
				0.00	534.55	Pull rope	Soft-Fiber Polyester
2111	E-135, E-160C	41	RGS conduit	0.00	534.55	Pull rope	Soft-Fiber Polyester
2116	E-136, E-135	41	RGS conduit	0.00	534.55	Pull rope	Soft-Fiber Polyester
2117	E-136	41	RGS conduit	0.00	534.55	Pull rope	Soft-Fiber Polyester
2118	E-137, E-136 3	41	RGS conduit	0.00	534.55	Pull rope	Soft-Fiber Polyester
2123	E-138	41	RGS conduit	0.00	534.55	Pull rope	Soft-Fiber Polyester
2125	E-138	41	RGS conduit	0.00	534.55	Pull rope	Soft-Fiber Polyester
2127	E-139	41	RGS conduit	0.00	534.55	Pull rope	Soft-Fiber Polyester
2130	E-140	41	RGS conduit	0.00	534.55	Pull rope	Soft-Fiber Polyester

For continuation, see next sheet.

CONDUIT AND TRAY SCHEDULE

E-411

DATE	REVISED BY	DATE REVISED
8/02	PBP	AB 8/02

CALCULATED/DESIGNED BY
CHECKED BY

DESIGN OVERSIGHT
BEHZAD GOLEMOHAMMADI

STATE OF CALIFORNIA - DEPARTMENT OF TRANSPORTATION
Caltrans

LAST REVISION 00-00-00
DATE PLOTTED => 15-APR-2011
TIME PLOTTED => 13:22

DIST	COUNTY	ROUTE	KILOMETER POST TOTAL PROJECT	SHEET No	TOTAL SHEETS
04	SF	80	13.2/13.9	367 R4	1204

REGISTERED ELECTRICAL ENGINEER 12/19/02 DATE

12-6-04
PLANS APPROVAL DATE

REGISTERED PROFESSIONAL ENGINEER JENS ERLINGSSON No. 8249 Exp. 9/30/06 ELECTRICAL STATE OF CALIFORNIA

PB POWER, Inc.
A Parsons Brinckerhoff Company
303 Second St., Suite 700N
San Francisco, CA 94107-1317

The State of California or its officers or agents shall not be responsible for the accuracy or completeness of electronic copies of this plan sheet.

Caltrans now has a web site! To get to the web site, go to http://www.dot.ca.gov

Caltrans Metric

REQUEST FOR INFORMATION NOT ADDRESSED IN THIS CCO REMAIN IN FORCE

MARK	DATE	DESCRIPTIONS	BY	CH'D	CCO#
4	03/24/11	BIKE PATH CONDUIT	TW	RG	73
3	06/11/10	BIKE PATH CONDUIT	TW	RG	73
2	07/17/09	WEST END BARRIER CONDUIT	RG	FW	44S1
1	03/04/08	BARRIER MODIFICATIONS	TW	RG	44

REVISIONS

CONTRACT CHANGE ORDER NO. 73
SHEET 28 OF 52

REGISTERED PROFESSIONAL ENGINEER FADI WALIEDDINE No. 11465 Exp. 12/31/2009 ELECTRICAL STATE OF CALIFORNIA

1 2 FOR REVISION ONLY

REGISTERED PROFESSIONAL ENGINEER SYN YEE CHIN No. 18186 Exp. 09/30/2011 ELECTRICAL STATE OF CALIFORNIA

3 4 Syn Yee Chin FOR REVISION ONLY

3 REVISIONS SUPERCEDED 4

CONDUIT DATA

Conduit No	Reference	Size	Type	Total Fill (mm²)	Allowable Fill (mm²)	Included Cable No.	Conductor Type
2300	E-138	41	PVC coated RGS conduit	212.85	534.55	A-2013-2	3 + 1 gnd #6,#8, 600 V RHH/RHW insulation
2301	E-138	41	PVC coated RGS conduit	0.00	534.55	Pull rope	Soft-Fiber Polyester
2302	E-137	41	PVC coated RGS conduit	0.00	534.55	Pull rope	Soft-Fiber Polyester
2326	E-135	41	PVC coated RGS conduit	425.70	534.55	Pull rope	Soft-Fiber Polyester
						~~A-2011-2~~	~~3 + 1 gnd #6,#8, 600 V RHH/RHW insulation~~
						LP219-2A,4A	3 + 1 gnd #6,#8, 600 V RHH/RHW insulation
2327	E-136	41	PVC coated RGS conduit	339.73	534.55	UP204-1	1-2/C + gnd #10, 600 V, EPR insulation
						A-2012-2	3 + 1 gnd #6,#8, 600 V RHH/RHW insulation
						Pull rope	Soft-Fiber Polyester
2328	E-135, E-160C	41	RGS conduit	339.73	534.55	UP204-1	1-2/C + gnd #10, 600 V, EPR insulation
						Pull rope	Soft-Fiber Polyester
						S-2031-2	3 + 1 gnd #6,#8, 600 V RHH/RHW insulation
2330	E-139	41	PVC coated RGS conduit	212.85	534.55	A-2014-2	3 + 1 gnd #6,#8, 600 V RHH/RHW insulation
						Pull rope	Soft-Fiber Polyester
2334	E-135	41	RGS conduit	126.88	534.55	Pull rope	Soft-Fiber Polyester
						UP205-1	1-2/C + gnd #10, 600 V, EPR insulation
2335	E-136	41	RGS conduit	339.73	534.55	A-3039-2	3 + 1 gnd #6,#8, 600 V RHH/RHW insulation
						Pull rope	Soft-Fiber Polyester
						UP205-1	1-2/C + gnd #10, 600 V, EPR insulation
2336	E-136	41	RGS conduit	339.73	534.55	Pull rope	Soft-Fiber Polyester
						UP205-1	1-2/C + gnd #10, 600 V, EPR insulation
						A-3039-2	3 + 1 gnd #6,#8, 600 V RHH/RHW insulation
2338	E-136	41	RGS conduit	0.00	534.55	Pull rope	Soft-Fiber Polyester
2339	E-136	41	RGS conduit	339.73	534.55	A-3040-2	3 + 1 gnd #6,#8, 600 V RHH/RHW insulation
						Pull rope	Soft-Fiber Polyester
						UP206-1	1-2/C + gnd #10, 600 V, EPR insulation

CONDUIT DATA

Conduit No	Reference	Size	Type	Total Fill (mm²)	Allowable Fill (mm²)	Included Cable No.	Conductor Type
2340	E-137	41	RGS conduit	339.73	534.55	Pull rope	Soft-Fiber Polyester
						UP206-1	1-2/C + gnd #10, 600 V, EPR insulation
						A-3040-2	3 + 1 gnd #6,#8, 600 V RHH/RHW insulation
2341	E-137	41	RGS conduit	0.00	534.55	Pull rope	Soft-Fiber Polyester
2346	E-138	41	RGS conduit	0.00	534.55	Pull rope	Soft-Fiber Polyester
2348	E-138, E-139	41	RGS conduit	481.21	534.55	S-2031-4	3+1gnd #4,#8, 600V, RHH/RHW insulation
						Pull rope	Soft-Fiber Polyester
						A-2035-4	3 + 1 gnd #6,#8, 600 V RHH/RHW insulation
2350	E-139	41	RGS conduit	425.70	534.55	Pull rope	Soft-Fiber Polyester
						A-2035-4	3 + 1 gnd #6,#8, 600 V RHH/RHW insulation
						S-2032-2	3 + 1 gnd #6,#8, 600 V RHH/RHW insulation
2353	E-139	41	RGS conduit	425.70	534.55	S-2032-2	3 + 1 gnd #6,#8, 600 V RHH/RHW insulation
						Pull rope	Soft-Fiber Polyester
						A-2035-4	3 + 1 gnd #6,#8, 600 V RHH/RHW insulation
2355	E-140	41	RGS conduit	425.70	534.55	A-2035-4	3 + 1 gnd #6,#8, 600 V RHH/RHW insulation
						Pull rope	Soft-Fiber Polyester
						S-2032-2	3 + 1 gnd #6,#8, 600 V RHH/RHW insulation
2357	E-140	41	RGS conduit	0.00	534.55	Pull rope	Soft-Fiber Polyester
2361	E-136	41	PVC coated RGS conduit	0.00	534.55	Pull rope	Soft-Fiber Polyester
2364	E-137	41	PVC coated RGS conduit	212.85	534.55	LP221-2A,4A	3 + 1 gnd #6,#8, 600 V RHH/RHW insulation
2368	E-135	41	PVC coated RGS conduit	212.85	534.55	LP219-2A,4A	3 + 1 gnd #6,#8, 600 V RHH/RHW insulation
2369	E-135	41	PVC coated RGS conduit	212.85	534.55	LP219-2A,4A	3 + 1 gnd #6,#8, 600 V RHH/RHW insulation
2370	E-135	41	PVC coated RGS conduit	212.85	534.55	LP219-2A,4A	3 + 1 gnd #6,#8, 600 V RHH/RHW insulation
2371	E-135	41	PVC coated RGS conduit	212.85	534.55	LP219-6A,8A	3 + 1 gnd #6,#8, 600 V RHH/RHW insulation
2372	E-135	41	PVC coated RGS conduit	212.85	534.55	LP219-6A,8A	3 + 1 gnd #6,#8, 600 V RHH/RHW insulation
2373	E-135	41	PVC coated RGS conduit	212.85	534.55	LP219-6A,8A	3 + 1 gnd #6,#8, 600 V RHH/RHW insulation
2374	E-135	41	PVC coated RGS conduit	212.85	534.55	LP219-6A,8A	3 + 1 gnd #6,#8, 600 V RHH/RHW insulation
2375	E-136	41	PVC coated RGS conduit	0.00	534.55	Pull rope	Soft-Fiber Polyester
2376	E-136	41	PVC coated RGS conduit	212.85	534.55	LP220-2A,4A	3 + 1 gnd #6,#8, 600 V RHH/RHW insulation

For continuation, see next sheet.

CONDUIT AND TRAY SCHEDULE

E-412

DATE	REVISED BY	DATE REVISED
8/02	PBP	AB 8/02

CALCULATED/DESIGNED BY
CHECKED BY

DESIGN OVERSIGHT
BEHZAD GOLEMOHAMMADI

STATE OF CALIFORNIA - DEPARTMENT OF TRANSPORTATION
Caltrans

LAST REVISION 00-00-00
DATE PLOTTED => 15-APR-2011
TIME PLOTTED => 13:22

FOR REDUCED PLANS ORIGINAL SCALE IS IN MILLIMETERS 0 20 40 60 80

DGN FILE =>04-0120f1_0367R04.dgn
USERNAME =>llorico

CU 04251 EA 0120F1

CONDUIT DATA

Conduit No	Reference	Size	Type	Total Fill (mm2)	Allowable Fill (mm2)	Included Cable No.	Conductor Type
2303	E-140	41	RGS conduit	0.00	534.55	Pull rope	Soft-Fiber Polyester
2304	E-140	41	RGS conduit	0.00	534.55	Pull rope	Soft-Fiber Polyester

REQUEST FOR INFORMATION NOT ADDRESSED IN THIS CCO REMAIN IN FORCE

MARK	DATE	DESCRIPTIONS	BY	CH'D	CCO#
2	03/24/11	BIKE PATH CONDUIT	TW	RG	73
1	06/11/10	BIKE PATH CONDUIT	TW	RG	73
0	03/04/08	BARRIER MODIFICATIONS	TW	RG	44

REVISIONS

CONTRACT CHANGE ORDER NO. 73
SHEET 29 OF 52

1 REVISIONS SUPERCEDED 2

Caltrans Metric

REGISTERED PROFESSIONAL ENGINEER SYN YEE CHIN No. 18186 Exp. 09/30/2011 ELECTRICAL STATE OF CALIFORNIA

Syn Yee Chin
FOR REVISION ONLY
1 2

DIST	COUNTY	ROUTE	KILOMETER POST TOTAL PROJECT	SHEET No	TOTAL SHEETS
04	SF	80	13.2/13.9	367 S1R2	1204

REGISTERED ELECTRICAL ENGINEER DATE

REGISTERED PROFESSIONAL ENGINEER FADI WALIEDDINE No. 11465 Exp. 12/31/2009 ELECTRICAL STATE OF CALIFORNIA

PLANS APPROVAL DATE

PB AMERICAS, Inc.
A Parsons Brinckerhoff Company
303 Second St., Suite 700N
San Francisco, CA 94107-1317

The State of California or its officers or agents shall not be responsible for the accuracy or completeness of electronic copies of this plan sheet.

Caltrans now has a web site! To get to the web site, go to http://www.dot.ca.gov

CONDUIT DATA

Conduit No	Reference	Size	Type	Total Fill (mm2)	Allowable Fill (mm2)	Included Cable No.	Conductor Type

For continuation, see next sheet.

CONDUIT AND TRAY SCHEDULE

E-412A

STATE OF CALIFORNIA - DEPARTMENT OF TRANSPORTATION
Caltrans

DESIGN OVERSIGHT: BEHZAD GOLEMOHAMMADI

CALCULATED/DESIGNED BY: PBP | CHECKED BY: AB

DATE 8/02 | REVISED BY: 8/02 | DATE REVISED

LAST REVISION 00-00-00 | DATE PLOTTED => 18-APR-2011 | TIME PLOTTED => 09:03

FOR REDUCED PLANS ORIGINAL SCALE IS IN MILLIMETERS 0 20 40 60 80

DGN FILE =>04-0120f1_0367S01R02.dgn
USERNAME =>llorico

CU 04251 | EA 0120F1

DIST	COUNTY	ROUTE	KILOMETER POST TOTAL PROJECT	SHEET No	TOTAL SHEETS
04	SF	80	13.2/13.9	368 R4	1204

REGISTERED ELECTRICAL ENGINEER 12/19/02 DATE

12-6-04
PLANS APPROVAL DATE

REGISTERED PROFESSIONAL ENGINEER JENS ERLINGSSON No. 8249 Exp. 9/30/06 ELECTRICAL STATE OF CALIFORNIA

PB POWER, Inc.
A Parsons Brinckerhoff Company
303 Second St., Suite 700N
San Francisco, CA 94107-1317

The State of California or its officers or agents shall not be responsible for the accuracy or completeness of electronic copies of this plan sheet.

Caltrans now has a web site! To get to the web site, go to: http://www.dot.ca.gov

Caltrans Metric

REQUEST FOR INFORMATION NOT ADDRESSED IN THIS CCO REMAIN IN FORCE

MARK	DATE	DESCRIPTIONS	BY	CH'D	CCO#
4	03/24/11	BIKE PATH CONDUIT	TW	RG	73
3	06/11/10	BIKE PATH CONDUIT	TW	RG	73
2	07/17/09	WEST END BARRIER CONDUIT	RG	FW	44S1
1	03/04/08	BARRIER MODIFICATIONS	JS BM	RG SE	44

REVISIONS

CONTRACT CHANGE ORDER NO. 73
SHEET 30 OF 52

FOR REVISION ONLY 1

REGISTERED PROFESSIONAL ENGINEER S. A. ESTOQUE JR No. E-10151 Exp. 12/31/2008 ELECTRICAL STATE OF CALIFORNIA

REGISTERED PROFESSIONAL ENGINEER FADI WALIEDDINE No. 11465 Exp. 12/31/2009 ELECTRICAL STATE OF CALIFORNIA 2

FOR REVISION ONLY

REGISTERED PROFESSIONAL ENGINEER SYN YEE CHIN No. 18186 Exp. 09/30/2011 ELECTRICAL STATE OF CALIFORNIA 3 4

FOR REVISION ONLY

3 REVISIONS SUPERCEDED 4

CONDUIT DATA

Conduit No	Reference	Size	Type	Total Fill (mm²)	Allowable Fill (mm²)	Included Cable No.	Conductor Type
2377	E-136	41	PVC coated RGS conduit	212.85	534.55	LP220-2A,4A	3 + 1 gnd #6,#8, 600 V, RHH/RHW Insulation
2378	E-136	41	PVC coated RGS conduit	212.85	534.55	LP220-2A,4A	3 + 1 gnd #6,#8, 600 V, RHH/RHW Insulation
2379	E-136	41	PVC coated RGS conduit	212.85	534.55	LP220-2A,4A	3 + 1 gnd #6,#8, 600 V, RHH/RHW Insulation
2380	E-136	41	PVC coated RGS conduit	212.85	534.55	LP220-6A,8A	3 + 1 gnd #6,#8, 600 V, RHH/RHW Insulation
2381	E-136	41	PVC coated RGS conduit	212.85	534.55	LP220-6A,8A	3 + 1 gnd #6,#8, 600 V, RHH/RHW Insulation
2382	E-136	41	PVC coated RGS conduit	212.85	534.55	LP220-6A,8A	3 + 1 gnd #6,#8, 600 V, RHH/RHW Insulation
2383	E-136	41	PVC coated RGS conduit	212.85	534.55	LP220-6A,8A	3 + 1 gnd #6,#8, 600 V, RHH/RHW Insulation
2384	E-136	41	PVC coated RGS conduit	212.85	534.55	LP220-6A,8A	3 + 1 gnd #6,#8, 600 V, RHH/RHW Insulation
2385	E-136	41	PVC coated RGS conduit	0.00	534.55	Pull rope	Soft-Fiber Polyester
2386	E-136	41	PVC coated RGS conduit	212.85	534.55	LP221-2A,4A	3 + 1 gnd #6,#8, 600 V, RHH/RHW Insulation
2387	E-137	41	PVC coated RGS conduit	212.85	534.55	LP221-2A,4A	3 + 1 gnd #6,#8, 600 V, RHH/RHW Insulation
2388	E-137	41	PVC coated RGS conduit	212.85	534.55	LP221-2A,4A	3 + 1 gnd #6,#8, 600 V, RHH/RHW Insulation
2389	E-137	41	PVC coated RGS conduit	212.85	534.55	LP221-6A,8A	3 + 1 gnd #6,#8, 600 V, RHH/RHW Insulation
2390	E-137	41	PVC coated RGS conduit	212.85	534.55	LP221-6A,8A	3 + 1 gnd #6,#8, 600 V, RHH/RHW Insulation
2391	E-137	41	PVC coated RGS conduit	212.85	534.55	LP221-6A,8A	3 + 1 gnd #6,#8, 600 V, RHH/RHW Insulation
2392	E-137	41	PVC coated RGS conduit	212.85	534.55	LP221-6A,8A	3 + 1 gnd #6,#8, 600 V, RHH/RHW Insulation
2393	E-137	41	PVC coated RGS conduit	212.85	534.55	LP221-6A,8A	3 + 1 gnd #6,#8, 600 V, RHH/RHW Insulation
2394	E-137	41	PVC coated RGS conduit	212.85	534.55	LP221-6A,8A	3 + 1 gnd #6,#8, 600 V, RHH/RHW Insulation
2395	E-137	41	PVC coated RGS conduit	212.85	534.55	LP221-6A,8A	3 + 1 gnd #6,#8, 600 V, RHH/RHW Insulation
2396	E-137	41	PVC coated RGS conduit	0.00	534.55	Pull rope	Soft-Fiber Polyester
2397	E-138	41	PVC coated RGS conduit	212.85	534.55	LP222-2A,4A	3 + 1 gnd #6,#8, 600 V, RHH/RHW Insulation
2398	E-138	41	PVC coated RGS conduit	212.85	534.55	LP222-2A,4A	3 + 1 gnd #6,#8, 600 V, RHH/RHW Insulation
2399	E-138	41	PVC coated RGS conduit	212.85	534.55	LP222-2A,4A	3 + 1 gnd #6,#8, 600 V, RHH/RHW Insulation
2426	E-135	41	PVC coated RGS conduit	212.85	534.55	LP219-2A,4A	3 + 1 gnd #6,#8, 600 V, RHH/RHW Insulation
						Pull rope	Soft-Fiber Polyester
2427	E-135	41	PVC coated RGS conduit	212.85	534.55	Pull rope	Soft-Fiber Polyester
						LP220-2A,4A	3 + 1 gnd #6,#8, 600 V, RHH/RHW Insulation
2428	E-135, E-160C	41	RGS conduit	212.85	534.55	Pull rope	Soft-Fiber Polyester
						A-2035-2	3 + 1 gnd #6,#8, 600 V, RHH/RHW Insulation
2429	E-136	41	PVC coated RGS conduit	212.85	534.55	LP220-6A,8A	3 + 1 gnd #6,#8, 600 V, RHH/RHW Insulation
2430	E-138	41	PVC coated RGS conduit	425.70	534.55	LP222-2A,4A	3 + 1 gnd #6,#8, 600 V, RHH/RHW Insulation
						LP222-6A,8A	3 + 1 gnd #6,#8, 600 V, RHH/RHW Insulation
2432	E-139	41	PVC coated RGS conduit	425.70	534.55	LP223-2A,4A	3 + 1 gnd #6,#8, 600 V, RHH/RHW Insulation
						LP223-6A,8A	3 + 1 gnd #6,#8, 600 V, RHH/RHW Insulation
2434	E-135	41	RGS conduit	0.00	534.55	Pull rope	Soft-Fiber Polyester
2435	E-136	41	RGS conduit	0.00	534.55	Pull rope	Soft-Fiber Polyester
2436	E-136	41	RGS conduit	0.00	534.55	Pull rope	Soft-Fiber Polyester
2438	E-136	41	RGS conduit	0.00	534.55	Pull rope	Soft-Fiber Polyester
2439	E-136	41	RGS conduit	0.00	534.55	Pull rope	Soft-Fiber Polyester
2440	E-139	41	RGS conduit	0.00	534.55	Pull rope	Soft-Fiber Polyester

CONDUIT DATA

Conduit No	Reference	Size	Type	Total Fill (mm²)	Allowable Fill (mm²)	Included Cable No.	Conductor Type
2441	E-137	41	RGS conduit	0.00	534.55	Pull rope	Soft-Fiber Polyester
2442	E-137	41	PVC coated RGS conduit	212.85	534.55	Pull rope	Soft-Fiber Polyester
						LP221-6A,8A	3 + 1 gnd #6,#8, 600 V, RHH/RHW Insulation
2446	E-138	41	RGS conduit	0.00	534.55	Pull rope	Soft-Fiber Polyester
2448	E-138	41	RGS conduit	0.00	534.55	Pull rope	Soft-Fiber Polyester
2450	E-139	41	RGS conduit	0.00	534.55	Pull rope	Soft-Fiber Polyester
2453	E-139	41	RGS conduit	0.00	534.55	Pull rope	Soft-Fiber Polyester
2455	E-140	41	RGS conduit	0.00	534.55	Pull rope	Soft-Fiber Polyester
2457	E-140	41	RGS conduit	0.00	534.55	Pull rope	Soft-Fiber Polyester
2468	E-135	41	PVC coated RGS conduit	212.85	534.55	A-2011-2	3 + 1 gnd #6,#8, 600 V, RHH/RHW Insulation
2469	E-135	41	PVC coated RGS conduit	212.85	534.55	A-2011-2	3 + 1 gnd #6,#8, 600 V, RHH/RHW Insulation
2470	E-135	41	PVC coated RGS conduit	212.85	534.55	A-2011-2	3 + 1 gnd #6,#8, 600 V, RHH/RHW Insulation
2471	E-135	41	PVC coated RGS conduit	212.85	534.55	A-2011-2	3 + 1 gnd #6,#8, 600 V, RHH/RHW Insulation
2472	E-135	41	PVC coated RGS conduit	212.85	534.55	A-2011-2	3 + 1 gnd #6,#8, 600 V, RHH/RHW Insulation
2473	E-135	41	PVC coated RGS conduit	212.85	534.55	A-2011-2	3 + 1 gnd #6,#8, 600 V, RHH/RHW Insulation
2474	E-135	41	PVC coated RGS conduit	212.85	534.55	A-2011-2	3 + 1 gnd #6,#8, 600 V, RHH/RHW Insulation
2475	E-136	41	PVC coated RGS conduit	212.85	534.55	A-2011-2	3 + 1 gnd #6,#8, 600 V, RHH/RHW Insulation
2476	E-136	41	PVC coated RGS conduit	212.85	534.55	A-2011-2	3 + 1 gnd #6,#8, 600 V, RHH/RHW Insulation
2477	E-136	41	PVC coated RGS conduit	212.85	534.55	A-2011-2	3 + 1 gnd #6,#8, 600 V, RHH/RHW Insulation

For continuation, see next sheet.

CONDUIT AND TRAY SCHEDULE

E-413

REVISED BY	DATE REVISED

CALCULATED/DESIGNED BY	CHECKED BY
PBP	AB

DATE 8/02 8/02

DESIGN OVERSIGHT
BEHZAD GOLEMOHAMMADI

STATE OF CALIFORNIA - DEPARTMENT OF TRANSPORTATION
Caltrans

LAST REVISION 00-00-00

DATE PLOTTED => 15-APR-2011
TIME PLOTTED => 13:22

FOR REDUCED PLANS ORIGINAL SCALE IS IN MILLIMETERS 0 20 40 60 80

DGN FILE =>04-0120f1_0368R04.dgn
USERNAME =>llorico

CU 04251 EA 0120F1

DIST	COUNTY	ROUTE	KILOMETER POST TOTAL PROJECT	SHEET No	TOTAL SHEETS
04	SF	80	13.2/13.9	369 R5	1204

REGISTERED ELECTRICAL ENGINEER 12/19/02 DATE

12-6-04
PLANS APPROVAL DATE

REGISTERED PROFESSIONAL ENGINEER JENS ERLINGSSON No. 8249 Exp. 9/30/06 ELECTRICAL STATE OF CALIFORNIA

PB POWER, Inc.
A Parsons Brinckerhoff Company
303 Second St., Suite 700N
San Francisco, CA 94107-1317

The State of California or its officers or agents shall not be responsible for the accuracy or completeness of electronic copies of this plan sheet.

Caltrans now has a web site! To get to the web site, go to: http://www.dot.ca.gov

Caltrans Metric

REQUEST FOR INFORMATION NOT ADDRESSED IN THIS CCO REMAIN IN FORCE

MARK	DATE	DESCRIPTIONS	BY	CH'D	CCO#
5	03/24/11	BIKE PATH CONDUIT	TW	RG	73
4	06/11/10	BIKE PATH CONDUIT	TW	RG	73
3	03/26/10	DEHUMIDIFIER SCADA INTERFACE	RR	RG FW	130
2	02/11/10	WEST END BARRIER CONDUIT	TW	RG DO	44S1
1	03/04/08	BARRIER MODIFICATIONS	JS BM	RG SE	44

REVISIONS

CONTRACT CHANGE ORDER NO. 73
SHEET 31 OF 52

REGISTERED PROFESSIONAL ENGINEER S. A. ESTOQUE, JR. No. E-10151 Exp. 12/31/2008 ELECTRICAL STATE OF CALIFORNIA 1
FOR REVISION ONLY

REGISTERED PROFESSIONAL ENGINEER DAVID H. OTO No. 10699 Exp. 06/30/2011 ELECTRICAL STATE OF CALIFORNIA 2
FOR REVISION ONLY

REGISTERED PROFESSIONAL ENGINEER SYN YEE CHIN No. 18186 Exp. 09/30/2011 ELECTRICAL STATE OF CALIFORNIA 3 4 5
FOR REVISION ONLY

4 REVISIONS SUPERCEDED 5

CONDUIT DATA

Conduit No	Reference	Size	Type	Total Fill (mm²)	Allowable Fill (mm²)	Included Cable No.	Conductor Type
2478	E-136	41	PVC coated RGS conduit	212.85	534.55	A-2011-2	3 + 1 gnd #6,#8, 600 V, RHH/RHW Insulation
2479	E-136	41	PVC coated RGS conduit	212.85	534.55	A-2011-2	3 + 1 gnd #6,#8, 600 V, RHH/RHW Insulation
2480	E-136	41	PVC coated RGS conduit	212.85	534.55	A-2011-2	3 + 1 gnd #6,#8, 600 V, RHH/RHW Insulation
2481	E-136	41	PVC coated RGS conduit	274.92	534.55	1256-7	1-3/C #16 ,600 V, EPR Insulation
						A-2011-2	3 + 1 gnd #6,#8, 600 V, RHH/RHW Insulation
2482	E-136	41	PVC coated RGS conduit	212.85	534.55	A-2012-2	3 + 1 gnd #6,#8, 600 V, RHH/RHW Insulation
2483	E-136	41	PVC coated RGS conduit	212.85	534.55	A-2012-2	3 + 1 gnd #6,#8, 600 V, RHH/RHW Insulation
2484	E-136	41	PVC coated RGS conduit	212.85	534.55	A-2012-2	3 + 1 gnd #6,#8, 600 V, RHH/RHW Insulation
2485	E-136	41	PVC coated RGS conduit	212.85	534.55	A-2012-2	3 + 1 gnd #6,#8, 600 V, RHH/RHW Insulation
2486	E-136	41	PVC coated RGS conduit	212.85	534.55	A-2012-2	3 + 1 gnd #6,#8, 600 V, RHH/RHW Insulation
2487	E-137	41	PVC coated RGS conduit	212.85	534.55	A-2012-2	3 + 1 gnd #6,#8, 600 V, RHH/RHW Insulation
2488	E-137	41	PVC coated RGS conduit	212.85	534.55	A-2012-2	3 + 1 gnd #6,#8, 600 V, RHH/RHW Insulation
2489	E-137	41	PVC coated RGS conduit	212.85	534.55	A-2012-2	3 + 1 gnd #6,#8, 600 V, RHH/RHW Insulation
2490	E-137	41	PVC coated RGS conduit	212.85	534.55	A-2012-2	3 + 1 gnd #6,#8, 600 V, RHH/RHW Insulation
2491	E-137	41	PVC coated RGS conduit	212.85	534.55	A-2012-2	3 + 1 gnd #6,#8, 600 V, RHH/RHW Insulation
2492	E-137	41	PVC coated RGS conduit	212.85	534.55	A-2012-2	3 + 1 gnd #6,#8, 600 V, RHH/RHW Insulation
2493	E-137	41	PVC coated RGS conduit	212.85	534.55	A-2012-2	3 + 1 gnd #6,#8, 600 V, RHH/RHW Insulation
2494	E-137	41	PVC coated RGS conduit	212.85	534.55	A-2012-2	3 + 1 gnd #6,#8, 600 V, RHH/RHW Insulation
2495	E-137	41	PVC coated RGS conduit	212.85	534.55	A-2012-2	3 + 1 gnd #6,#8, 600 V, RHH/RHW Insulation
2496	E-137	41	PVC coated RGS conduit	212.85	534.55	A-2012-2	3 + 1 gnd #6,#8, 600 V, RHH/RHW Insulation
2497	E-138	41	PVC coated RGS conduit	0.00	534.55	Pull rope	Soft-Fiber Polyester
2498	E-138	41	PVC coated RGS conduit	212.85	534.55	A-2013-2	3 + 1 gnd #6,#8, 600 V, RHH/RHW Insulation
2499	E-138	41	PVC coated RGS conduit	212.85	534.55	A-2013-2	3 + 1 gnd #6,#8, 600 V, RHH/RHW Insulation
2511	E-135, E-160C	41	PVC coated RGS conduit	98.10	702.80 5	2155	1 - 2 pair, shielded #18 with IS/OA, 300 V, PVC jacket
						Pull rope	Soft-Fiber Polyester
2512	E-135	41	RGS conduit	0.00	534.55	Pull rope	Soft-Fiber Polyester
2513	E-136	41	RGS conduit	0.00	534.55	Pull rope	Soft-Fiber Polyester
2514	E-136	41	RGS conduit	0.00	534.55	Pull rope	Soft-Fiber Polyester
2515	E-136	41	RGS conduit	0.00	534.55	Pull rope	Soft-Fiber Polyester
2516	E-136	41	RGS conduit	0.00	534.55	Pull rope	Soft-Fiber Polyester
2517	E-136	41	RGS conduit	0.00	534.55	Pull rope	Soft-Fiber Polyester
2518	E-136	41	RGS conduit	0.00	534.55	Pull rope	Soft-Fiber Polyester
2519	E-137	41	RGS conduit	0.00	534.55	Pull rope	Soft-Fiber Polyester
2520	E-137	41	RGS conduit	0.00	534.55	Pull rope	Soft-Fiber Polyester
2521	E-137	41	RGS conduit	0.00	534.55	Pull rope	Soft-Fiber Polyester
2522	E-138	41	RGS conduit	0.00	534.55	Pull rope	Soft-Fiber Polyester
2523	E-138	41	RGS conduit	0.00	534.55	Pull rope	Soft-Fiber Polyester
2524	E-138	41	RGS conduit	0.00	534.55	Pull rope	Soft-Fiber Polyester
2525	E-138	41	RGS conduit	0.00	534.55	Pull rope	Soft-Fiber Polyester
2526	E-139	41	RGS conduit	0.00	534.55	Pull rope	Soft-Fiber Polyester

CONDUIT DATA

Conduit No	Reference	Size	Type	Total Fill (mm²)	Allowable Fill (mm²)	Included Cable No.	Conductor Type
2527	E-139	41	RGS conduit	0.00	534.55	Pull rope	Soft-Fiber Polyester
2528	E-139	41	RGS conduit	0.00	534.55	Pull rope	Soft-Fiber Polyester
2529	E-139	41	RGS conduit	0.00	534.55	Pull rope	Soft-Fiber Polyester
2530	E-139	41	RGS conduit	0.00	534.55	Pull rope	Soft-Fiber Polyester
2532	E-186	41	RGS conduit	227.46	534.55	UP208-6B 5	1-2/C + gnd #8, 600 V, EPR Insulation
2533	E-186	41	RGS conduit	98.10	534.55	2154	
2533	E-186	41	RGS conduit	98.10	534.55	2154	1 - 2 pair, shielded #18 with IS/OA, 300 V, PVC jacket
2534	E-186, E-199	27	RGS-PVC coated conduit	98.10	229.03	Pull rope	Soft-Fiber Polyester
						1118-1	1-2PR #18 Twisted Shielded w/overall shield
2535	E-199, E-186	78	RGS-PVC coated conduit	882.89	1935.24	1118	1-3/C + gnd #2/0,600 V, EPR Insulation
						Pull rope	Soft-Fiber Polyester
~~2536~~							
2537	E-138	41 5	PVC coated RGS conduit	212.85	534.55	5 LP222-2A,4A	3 + 1 gnd #6,#8, 600 V, RHH/RHW Insulation
2538	E-138	41	PVC coated RGS conduit	212.85	534.55	LP222-2A,4A	3 + 1 gnd #6,#8, 600 V, RHH/RHW Insulation
2539	E-138	41	PVC coated RGS conduit	212.85	534.55	LP222-2A,4A	3 + 1 gnd #6,#8, 600 V, RHH/RHW Insulation
2540	E-138	41	PVC coated RGS conduit	212.85	534.55	LP222-2A,4A	3 + 1 gnd #6,#8, 600 V, RHH/RHW Insulation
2541	E-138	41	PVC coated RGS conduit	212.85	534.55	LP222-6A,8A	3 + 1 gnd #6,#8, 600 V, RHH/RHW Insulation
2542	E-138	41	PVC coated RGS conduit	212.85	534.55	LP222-6A,8A	3 + 1 gnd #6,#8, 600 V, RHH/RHW Insulation
2543	E-138	41	PVC coated RGS conduit	212.85	534.55	LP222-6A,8A	3 + 1 gnd #6,#8, 600 V, RHH/RHW Insulation
2544	E-138	41	PVC coated RGS conduit	212.85	534.55	LP222-6A,8A	3 + 1 gnd #6,#8, 600 V, RHH/RHW Insulation
2545	E-138	41	PVC coated RGS conduit	212.85	534.55	LP222-6A,8A	3 + 1 gnd #6,#8, 600 V, RHH/RHW Insulation
2546	E-138	41	PVC coated RGS conduit	212.85	534.55	LP222-6A,8A	3 + 1 gnd #6,#8, 600 V, RHH/RHW Insulation
2547	E-139	41	PVC coated RGS conduit	212.85	534.55	LP222-6A,8A	3 + 1 gnd #6,#8, 600 V, RHH/RHW Insulation
2548	E-139	41	PVC coated RGS conduit	0.00	534.55	Pull rope	Soft-Fiber Polyester
2549	E-139	41	PVC coated RGS conduit	212.85	534.55	5 LP223-2A,4A	3 + 1 gnd #6,#8, 600 V, RHH/RHW Insulation
2550	E-139	41	PVC coated RGS conduit	212.85	534.55	LP223-2A,4A	3 + 1 gnd #6,#8, 600 V, RHH/RHW Insulation

For continuation, see next sheet.

CONDUIT AND TRAY SCHEDULE

E-414

REVISED BY	DATE REVISED

CALCULATED/DESIGNED BY	DATE 8/02
PBP	8/02
CHECKED BY	AB

DESIGN OVERSIGHT
BEHZAD GOLEMOHAMMADI

STATE OF CALIFORNIA - DEPARTMENT OF TRANSPORTATION
Caltrans

LAST REVISION 00-00-00

DATE PLOTTED => 15-APR-2011
TIME PLOTTED => 13:22

DIST	COUNTY	ROUTE	KILOMETER POST TOTAL PROJECT	SHEET No	TOTAL SHEETS
04	SF	80	13.2/13.9	370 R5	1204

REGISTERED ELECTRICAL ENGINEER 12/19/02 DATE

12-6-04
PLANS APPROVAL DATE

REGISTERED PROFESSIONAL ENGINEER JENS ERLINGSSON No. 8249 Exp. 9/30/06 ELECTRICAL STATE OF CALIFORNIA

PB POWER, Inc.
A Parsons Brinckerhoff Company
303 Second St., Suite 700N
San Francisco, CA 94107-1317

The State of California or its officers or agents shall not be responsible for the accuracy or completeness of electronic copies of this plan sheet.

Caltrans now has a web site! To get to the web site, go to: http://www.dot.ca.gov

Caltrans Metric

REQUEST FOR INFORMATION NOT ADDRESSED IN THIS CCO REMAIN IN FORCE

MARK	DATE	DESCRIPTIONS	BY	CH'D	CCO#
5	03/24/11	BIKE PATH CONDUIT	TW	RG	73
4	06/11/10	BIKE PATH CONDUIT	TW	RG	73
3	07/17/09	WEST END BARRIER CONDUIT	RG	FW	44S1
2	03/04/08	BARRIER MODIFICATIONS	JS BM	RG SE	44
1	02/19/08	ELECTRICAL MODIFICATIONS	MP EL	RR	42

REVISIONS

CONTRACT CHANGE ORDER NO. 73
SHEET 32 OF 52

REGISTERED PROFESSIONAL ENGINEER SYN YEE CHIN No. 18186 Exp. 09/30/2011 ELECTRICAL STATE OF CALIFORNIA
Syn Yee Chin
FOR REVISION ONLY 4 5

REGISTERED PROFESSIONAL ENGINEER FADI WALIEDDINE No. 11465 Exp. 12/31/2009 ELECTRICAL STATE OF CALIFORNIA
FOR REVISION ONLY 3

REGISTERED PROFESSIONAL ENGINEER S. A. ESTOQUE, JR. No. E-10151 Exp. 12/31/2008 ELECTRICAL STATE OF CALIFORNIA
FOR REVISION ONLY 2

REGISTERED PROFESSIONAL ENGINEER MAXWELL FUMIO TAKATA No. E 8651 Exp. 9/30/2008 ELECTRICAL STATE OF CALIFORNIA
FOR REVISION ONLY 1

4 REVISIONS SUPERCEDED 5

CONDUIT DATA

Conduit No	Reference	Size	Type	Total Fill (mm²)	Allowable Fill (mm²)	Included Cable No.	Conductor Type
2551	E-139	41	PVC coated RGS conduit	212.85	534.55	LP223-2A,4A	3 + 1 gnd #6,#8, 600 V, RHH/RHW Insulation
2552	E-139	41	PVC coated RGS conduit	212.85	534.55	LP223-2A,4A	3 + 1 gnd #6,#8, 600 V, RHH/RHW Insulation
2553	E-139	41	PVC coated RGS conduit	212.85	534.55	LP223-2A,4A	3 + 1 gnd #6,#8, 600 V, RHH/RHW Insulation
2554	E-139	41	PVC coated RGS conduit	212.85	534.55	LP223-2A,4A	3 + 1 gnd #6,#8, 600 V, RHH/RHW Insulation
2555	E-139	41	PVC coated RGS conduit	212.85	534.55	LP223-2A,4A	3 + 1 gnd #6,#8, 600 V, RHH/RHW Insulation
2556	E-139	41	PVC coated RGS conduit	212.85	534.55	LP223-6A,8A	3 + 1 gnd #6,#8, 600 V, RHH/RHW Insulation
2557	E-139	41	PVC coated RGS conduit	212.85	534.55	LP223-6A,8A	3 + 1 gnd #6,#8, 600 V, RHH/RHW Insulation
2558	E-140	41	PVC coated RGS conduit	212.85	534.55	LP223-6A,8A	3 + 1 gnd #6,#8, 600 V, RHH/RHW Insulation
2559	E-140	41	PVC coated RGS conduit	212.85	534.55	LP223-6A,8A	3 + 1 gnd #6,#8, 600 V, RHH/RHW Insulation
2560	E-140	41	PVC coated RGS conduit	212.85	534.55	LP223-6A,8A	3 + 1 gnd #6,#8, 600 V, RHH/RHW Insulation
2561	E-140	41	PVC coated RGS conduit	212.85	534.55	LP223-6A,8A	3 + 1 gnd #6,#8, 600 V, RHH/RHW Insulation
2562	E-140	41	PVC coated RGS conduit	212.85	534.55	LP223-6A,8A	3 + 1 gnd #6,#8, 600 V, RHH/RHW Insulation
2563	E-140	41	PVC coated RGS conduit	212.85	534.55	LP223-6A,8A	3 + 1 gnd #6,#8, 600 V, RHH/RHW Insulation
2564	E-140	41	RGS conduit	0.00	534.55	Pull rope	Soft-Fiber Polyester 5
2622	E-138	41	RGS conduit	0.00	534.55	Pull rope	Soft-Fiber Polyester 5
2631	E-140	41	RGS conduit	0.00	534.55	Pull rope	Soft-Fiber Polyester 5
2632	E-140	41	RGS conduit	0.00	534.55	Pull rope	Soft-Fiber Polyester
2637	E-138	41 5	PVC coated RGS conduit	212.85	534.55	Pull rope	Soft-Fiber Polyester
2638	E-138	41	PVC coated RGS conduit	212.85	534.55	A-2013-2	3 + 1 gnd #6,#8, 600 V, RHH/RHW Insulation
2639	E-138	41	PVC coated RGS conduit	212.85	534.55	A-2013-2	3 + 1 gnd #6,#8, 600 V, RHH/RHW Insulation
2640	E-138	41	PVC coated RGS conduit	212.85	534.55	A-2013-2	3 + 1 gnd #6,#8, 600 V, RHH/RHW Insulation
2641	E-138	41	PVC coated RGS conduit	212.85	534.55	A-2013-2	3 + 1 gnd #6,#8, 600 V, RHH/RHW Insulation
2642	E-138	41	PVC coated RGS conduit	212.85	534.55	A-2013-2	3 + 1 gnd #6,#8, 600 V, RHH/RHW Insulation

CONDUIT DATA

Conduit No	Reference	Size	Type	Total Fill (mm²)	Allowable Fill (mm²)	Included Cable No.	Conductor Type
2643	E-138	41	PVC coated RGS conduit	212.85	534.55	A-2013-2	3 + 1 gnd #6,#8, 600 V, RHH/RHW Insulation
2644	E-138	41	PVC coated RGS conduit	212.85	534.55	A-2013-2	3 + 1 gnd #6,#8, 600 V, RHH/RHW Insulation
2645	E-138	41	PVC coated RGS conduit	212.85	534.55	A-2013-2	3 + 1 gnd #6,#8, 600 V, RHH/RHW Insulation
2646	E-138	41	PVC coated RGS conduit	212.85	534.55	A-2013-2	3 + 1 gnd #6,#8, 600 V, RHH/RHW Insulation
2647	E-139	41	PVC coated RGS conduit	212.85	534.55	A-2013-2	3 + 1 gnd #6,#8, 600 V, RHH/RHW Insulation
2648	E-139	41	PVC coated RGS conduit	212.85	534.55	A-2013-2	3 + 1 gnd #6,#8, 600 V, RHH/RHW Insulation
2649	E-139	41	PVC coated RGS conduit	212.85	534.55	A-2013-2	3 + 1 gnd #6,#8, 600 V, RHH/RHW Insulation
2650	E-139	41	PVC coated RGS conduit	212.85	534.55	A-2014-2	3 + 1 gnd #6,#8, 600 V, RHH/RHW Insulation
2651	E-139	41	PVC coated RGS conduit	212.85	534.55	A-2014-2	3 + 1 gnd #6,#8, 600 V, RHH/RHW Insulation
2652	E-139	41	PVC coated RGS conduit	212.85	534.55	A-2014-2	3 + 1 gnd #6,#8, 600 V, RHH/RHW Insulation
2653	E-139	41	PVC coated RGS conduit	212.85	534.55	A-2014-2	3 + 1 gnd #6,#8, 600 V, RHH/RHW Insulation
2654	E-139	41	PVC coated RGS conduit	212.85	534.55	A-2014-2	3 + 1 gnd #6,#8, 600 V, RHH/RHW Insulation
2655	E-139	41	PVC coated RGS conduit	212.85	534.55	A-2014-2	3 + 1 gnd #6,#8, 600 V, RHH/RHW Insulation
2656	E-139	41	PVC coated RGS conduit	212.85	534.55	A-2014-2	3 + 1 gnd #6,#8, 600 V, RHH/RHW Insulation
2657	E-139	41	PVC coated RGS conduit	212.85	534.55	A-2014-2	3 + 1 gnd #6,#8, 600 V, RHH/RHW Insulation
2658	E-140	41	PVC coated RGS conduit	212.85	534.55	A-2014-2	3 + 1 gnd #6,#8, 600 V, RHH/RHW Insulation
2659	E-140	41	PVC coated RGS conduit	212.85	534.55	A-2014-2	3 + 1 gnd #6,#8, 600 V, RHH/RHW Insulation
2660	E-140	41	PVC coated RGS conduit	212.85	534.55	A-2014-2	3 + 1 gnd #6,#8, 600 V, RHH/RHW Insulation
2661	E-140	41	PVC coated RGS conduit	212.85	534.55	A-2014-2	3 + 1 gnd #6,#8, 600 V, RHH/RHW Insulation
2662	E-140	41	PVC coated RGS conduit	212.85	534.55	A-2014-2	3 + 1 gnd #6,#8, 600 V, RHH/RHW Insulation
2663	E-140	41	PVC coated RGS conduit	212.85	534.55	A-2014-2 5	3 + 1 gnd #6,#8, 600 V, RHH/RHW Insulation
2664	E-135	41	PVC coated RGS conduit	212.85	534.55	LP219-6A,8A	3 + 1 gnd #6,#8, 600 V, RHH/RHW Insulation
2757	E-160C	41	RGS conduit	0.00	534.55	Pull rope	Soft-Fiber Polyester
2758	E-135, E-160C	41	RGS conduit, PVC Coated	227.46	534.55	Pull rope	Soft-Fiber Polyester
						UP205-6	1-2/C + gnd #8, 600 V, EPR Insulation
2759	E-135	41	RGS conduit	440.31	534.55	A-3031-2	3 + 1 gnd #6,#8, 600 V, RHH/RHW Insulation
						UP205-6	1-2/C + gnd #8, 600 V, EPR Insulation
						Pull rope	Soft-Fiber Polyester

For continuation, see next sheet.

CONDUIT AND TRAY SCHEDULE

E-415

REVISED BY	DATE REVISED
PBP	8/02
AB	8/02

CALCULATED/DESIGNED BY
CHECKED BY

DESIGN OVERSIGHT
BEHZAD GOLEMOHAMMADI

STATE OF CALIFORNIA - DEPARTMENT OF TRANSPORTATION
Caltrans

DATE PLOTTED => 15-APR-2011
TIME PLOTTED => 13:22

LAST REVISION 00-00-00

FOR REDUCED PLANS ORIGINAL SCALE IS IN MILLIMETERS 0 20 40 60 80

DGN FILE =>04-0120f1_0370R05.dgn
USERNAME =>llorico

CU 04251 | EA 0120F1

DIST	COUNTY	ROUTE	KILOMETER POST TOTAL PROJECT	SHEET No	TOTAL SHEETS
04	SF	80	13.2/13.9	371 R5	1204

REGISTERED ELECTRICAL ENGINEER 12/19/02 DATE

12-6-04
PLANS APPROVAL DATE

PB POWER, Inc.
A Parsons Brinckerhoff Company
303 Second St., Suite 700N
San Francisco, CA 94107-1317

REGISTERED PROFESSIONAL ENGINEER JENS ERLINGSSON No. 8249 Exp. 9/30/06 ELECTRICAL STATE OF CALIFORNIA

The State of California or its officers or agents shall not be responsible for the accuracy or completeness of electronic copies of this plan sheet.

Caltrans now has a web site! To get to the web site, go to: http://www.dot.ca.gov

Caltrans Metric

REQUEST FOR INFORMATION NOT ADDRESSED IN THIS CCO REMAIN IN FORCE

MARK	DATE	DESCRIPTIONS	BY	CH'D	CCO#
5	03/24/11	BIKE PATH CONDUIT	TW	RG	73
4	06/11/10	BIKE PATH CONDUIT	TW	RG	73
3	07/17/09	WEST END BARRIER CONDUIT	RG	FW	44S1
2	03/04/08	BARRIER MODIFICATIONS	JS BM	RG SE	44
1	02/19/08	ELECTRICAL MODIFICATIONS	MP EL	RR	42

REVISIONS

CONTRACT CHANGE ORDER NO. 73
SHEET 33 OF 52

REGISTERED PROFESSIONAL ENGINEER MARRELL FUMIO TAKATA No. E 8651 Exp. 9/30/2008 ELECTRICAL STATE OF CALIFORNIA
FOR REVISION ONLY 1

REGISTERED PROFESSIONAL ENGINEER S. A. ESTOQUE, JR. No. E-10151 Exp. 12/31/2008 ELECTRICAL STATE OF CALIFORNIA 2
FOR REVISION ONLY

REGISTERED PROFESSIONAL ENGINEER FADI WALIEDDINE No. 11465 Exp. 12/31/2009 ELECTRICAL STATE OF CALIFORNIA
FOR REVISION ONLY 3

REGISTERED PROFESSIONAL ENGINEER SYN YEE CHIN No. 18186 Exp. 09/30/2011 ELECTRICAL STATE OF CALIFORNIA
FOR REVISION ONLY 4 5

4 REVISIONS SUPERCEDED 5

CONDUIT DATA

Conduit No	Reference	Size	Type	Total Fill (mm²)	Allowable Fill (mm²)	Included Cable No.	Conductor Type
2760	E-135	41	RGS conduit	440.31	534.55	A-3031-2	3 + 1 gnd #6,#8, 600 V, RHH/RHW Insulation
						UP205-6	1-2/C + gnd #8, 600 V, EPR Insulation
						Pull rope	Soft-Fiber Polyester
2761	E-135	41	RGS conduit	425.70	534.55	LP219-2A,4A (5)	3 + 1 gnd #6,#8, 600 V, RHH/RHW Insulation
						Pull rope	Soft-Fiber Polyester
						A-3031-2	3 + 1 gnd #6,#8, 600 V, RHH/RHW Insulation
2762	E-135	41	RGS conduit	212.85	534.55	Pull rope	Soft-Fiber Polyester
						A-3031-2	3 + 1 gnd #6,#8, 600 V, RHH/RHW Insulation
2763	E-135	41	RGS conduit	212.85	534.55	Pull rope	Soft-Fiber Polyester
						A-3031-2	3 + 1 gnd #6,#8, 600 V, RHH/RHW Insulation
2764	E-135	41	RGS conduit	212.85	534.55	Pull rope	Soft-Fiber Polyester
						A-3031-2	3 + 1 gnd #6,#8, 600 V, RHH/RHW Insulation
2765	E-135	41	RGS conduit	212.85	534.55	Pull rope	Soft-Fiber Polyester
						A-3031-2	3 + 1 gnd #6,#8, 600 V, RHH/RHW Insulation
2766	E-136	41	RGS conduit	212.85	534.55	Pull rope	Soft-Fiber Polyester
						A-3031-2	3 + 1 gnd #6,#8, 600 V, RHH/RHW Insulation
2767	E-136	41	RGS conduit	0.00	534.55	Pull rope	Soft-Fiber Polyester
2768	E-136	41	RGS conduit	212.85	534.55	Pull rope	Soft-Fiber Polyester
						A-3032-2	3 + 1 gnd #6,#8, 600 V, RHH/RHW Insulation
2769	E-136	41	RGS conduit	212.85	534.55	Pull rope	Soft-Fiber Polyester
						A-3032-2	3 + 1 gnd #6,#8, 600 V, RHH/RHW Insulation
2770	E-136	41	RGS conduit	212.85	534.55	Pull rope	Soft-Fiber Polyester
						A-3032-2	3 + 1 gnd #6,#8, 600 V, RHH/RHW Insulation
2771	E-136	41	RGS conduit	212.85	534.55	A-3032-2	3 + 1 gnd #6,#8, 600 V, RHH/RHW Insulation
						Pull rope	Soft-Fiber Polyester
2772	E-136	41	RGS conduit	212.85	534.55	Pull rope	Soft-Fiber Polyester
						A-3032-2	3 + 1 gnd #6,#8, 600 V, RHH/RHW Insulation
2773	E-136	41	RGS conduit	212.85	534.55	Pull rope	Soft-Fiber Polyester
						A-3033-2	3 + 1 gnd #6,#8, 600 V, RHH/RHW Insulation
2774	E-136	53	RGS conduit	537.14	681.55	Pull rope	Soft-Fiber Polyester
						A-3040-3	1-3/C + gnd #6, 600 V, EPR Insulation
						A-3033-2	3 + 1 gnd #6,#8, 600 V, RHH/RHW Insulation
2775	E-136	53	RGS conduit	537.14	681.55	A-3033-2	3 + 1 gnd #6,#8, 600 V, RHH/RHW Insulation
						A-3040-3	1-3/C + gnd #6, 600 V, EPR Insulation
						Pull rope	Soft-Fiber Polyester
2776	E-136	41	RGS conduit	212.85	534.55	A-3033-2	3 + 1 gnd #6,#8, 600 V, RHH/RHW Insulation
						Pull rope	Soft-Fiber Polyester
2777	E-136	41	RGS conduit	212.85	534.55	Pull rope	Soft-Fiber Polyester
						A-3033-2	3 + 1 gnd #6,#8, 600 V, RHH/RHW Insulation
2778	E-137	41	RGS conduit	212.85	534.55	Pull rope	Soft-Fiber Polyester
						A-3033-2	3 + 1 gnd #6,#8, 600 V, RHH/RHW Insulation
2779	E-137	41	RGS conduit	0.00	534.55	Pull rope (5)	Soft-Fiber Polyester
2780	E-137	41	RGS conduit	425.70	534.55	LP221-2A,4A	3 + 1 gnd #6,#8, 600 V, RHH/RHW Insulation
						A-3034-2	3 + 1 gnd #6,#8, 600 V, RHH/RHW Insulation
						Pull rope	Soft-Fiber Polyester
2781	E-137	41	RGS conduit	212.85	534.55	Pull rope	Soft-Fiber Polyester
						A-3034-2	3 + 1 gnd #6,#8, 600 V, RHH/RHW Insulation
2782	E-137	41	RGS conduit	212.85	534.55	Pull rope	Soft-Fiber Polyester
						A-3034-2	3 + 1 gnd #6,#8, 600 V, RHH/RHW Insulation
2783	E-137	41	RGS conduit	212.85	534.55	Pull rope	Soft-Fiber Polyester
						A-3034-2	3 + 1 gnd #6,#8, 600 V, RHH/RHW Insulation
2784	E-137	41	RGS conduit	212.85	534.55	Pull rope	Soft-Fiber Polyester
						A-3034-2	3 + 1 gnd #6,#8, 600 V, RHH/RHW Insulation
2785	E-137	41	RGS conduit	0.00	534.55	Pull rope	Soft-Fiber Polyester

CONDUIT DATA

Conduit No	Reference	Size	Type	Total Fill (mm²)	Allowable Fill (mm²)	Included Cable No.	Conductor Type
2786	E-137	41	RGS conduit	212.85	534.55	A-3035-2	3 + 1 gnd #6,#8, 600 V, RHH/RHW Insulation
						Pull rope	Soft-Fiber Polyester
2787	E-137	41	RGS conduit	212.85	534.55	Pull rope	Soft-Fiber Polyester
						A-3035-2	3 + 1 gnd #6,#8, 600 V, RHH/RHW Insulation
2788	E-137	41	RGS conduit	212.85	534.55	Pull rope	Soft-Fiber Polyester
						A-3035-2	3 + 1 gnd #6,#8, 600 V, RHH/RHW Insulation
2789	E-138	41	RGS conduit	212.85	534.55	Pull rope	Soft-Fiber Polyester
						A-3035-2	3 + 1 gnd #6,#8, 600 V, RHH/RHW Insulation
2790	E-138	41	RGS conduit	212.85	534.55	Pull rope	Soft-Fiber Polyester
						A-3035-2	3 + 1 gnd #6,#8, 600 V, RHH/RHW Insulation
2791	E-138	41	RGS conduit	0.00	534.55	Pull rope	Soft-Fiber Polyester
2792	E-138	41	RGS conduit	212.85	534.55	A-3036-2	3 + 1 gnd #6,#8, 600 V, RHH/RHW Insulation
						Pull rope	Soft-Fiber Polyester
2793	E-138	41	RGS conduit	212.85	534.55	A-3036-2	3 + 1 gnd #6,#8, 600 V, RHH/RHW Insulation
						Pull rope	Soft-Fiber Polyester
2794	E-138	41	RGS conduit	212.85	534.55	Pull rope	Soft-Fiber Polyester
						A-3036-2	3 + 1 gnd #6,#8, 600 V, RHH/RHW Insulation
2795	E-138	41	RGS conduit	425.70	534.55	Pull rope	Soft-Fiber Polyester
					(5)	A-3036-2	3 + 1 gnd #6,#8, 600 V, RHH/RHW Insulation
						LP222-2A,4A	3 + 1 gnd #6,#8, 600 V, RHH/RHW Insulation
2796	E-138	41	RGS conduit	212.85	534.55	Pull rope	Soft-Fiber Polyester
						A-3036-2	3 + 1 gnd #6,#8, 600 V, RHH/RHW Insulation
2797	E-138	41	RGS conduit	212.85	534.55	Pull rope	Soft-Fiber Polyester
						A-3036-2	3 + 1 gnd #6,#8, 600 V, RHH/RHW Insulation
2798	E-138	41	RGS conduit	212.85	534.55	A-3036-2	3 + 1 gnd #6,#8, 600 V, RHH/RHW Insulation
						Pull rope	Soft-Fiber Polyester
2799	E-138	41	RGS conduit	212.85	534.55	A-3036-2	3 + 1 gnd #6,#8, 600 V, RHH/RHW Insulation
						Pull rope	Soft-Fiber Polyester
2857	E-160C	41	RGS conduit	212.85	534.55	Pull rope	Soft-Fiber Polyester (5)
						LP219-2A,4A	3 + 1 gnd #6,#8, 600 V, RHH/RHW Insulation
2858	E-135, E-160C	41	RGS conduit, PVC Coated	212.85	534.55	Pull rope	Soft-Fiber Polyester (5)
						LP219-2A,4A	3 + 1 gnd #6,#8, 600 V, RHH/RHW Insulation
2859	E-135	41	RGS conduit	425.70	534.55	Pull rope	Soft-Fiber Polyester
				(5)		A-2011-2	3 + 1 gnd #6,#8, 600 V, RHH/RHW Insulation (5)
						LP219-2A,4A	3 + 1 gnd #6,#8, 600 V, RHH/RHW Insulation
2860	E-135	41	RGS conduit	0.00	534.55	Pull rope	Soft-Fiber Polyester
2861	E-135	41	RGS conduit	212.85	534.55	Pull rope (5)	Soft-Fiber Polyester
						LP219-6A,8A	3 + 1 gnd #6,#8, 600 V, RHH/RHW Insulation

For continuation, see next sheet.

CONDUIT AND TRAY SCHEDULE

E-416

DATE	BY	REVISED BY	DATE REVISED
8/02	PBP	AB	8/02

CALCULATED/DESIGNED BY — CHECKED BY

DESIGN OVERSIGHT — BEHZAD GOLEMOHAMMADI

STATE OF CALIFORNIA - DEPARTMENT OF TRANSPORTATION — Caltrans

LAST REVISION 00-00-00 — DATE PLOTTED => 15-APR-2011 — TIME PLOTTED => 13:22

FOR REDUCED PLANS ORIGINAL SCALE IS IN MILLIMETERS 0 20 40 60 80

DGN FILE =>04-0120f1_0371R05.dgn
USERNAME =>llorico

CU 04251 | EA 0120F1

DIST	COUNTY	ROUTE	KILOMETER POST TOTAL PROJECT	SHEET No	TOTAL SHEETS
04	SF	80	13.2/13.9	372 R2	1204

REGISTERED ELECTRICAL ENGINEER 12/19/02 DATE

12-6-04
PLANS APPROVAL DATE

REGISTERED PROFESSIONAL ENGINEER JENS ERLINGSSON No. 8249 Exp. 9/30/06 ELECTRICAL STATE OF CALIFORNIA

PB POWER, Inc.
A Parsons Brinckerhoff Company
303 Second St., Suite 700N
San Francisco, CA 94107-1317

The State of California or its officers or agents shall not be responsible for the accuracy or completeness of electronic copies of this plan sheet.

Caltrans now has a web site! To get to the web site, go to: http://www.dot.ca.gov

Caltrans Metric

REQUEST FOR INFORMATION NOT ADDRESSED IN THIS CCO REMAIN IN FORCE

MARK	DATE	DESCRIPTIONS	BY	CH'D	CCO#
2	03/24/11	BIKE PATH CONDUIT	TW	RG	73
1	06/11/10	BIKE PATH CONDUIT	TW	RG	73

REVISIONS

CONTRACT CHANGE ORDER NO. 73
SHEET 34 OF 52

1 REVISIONS SUPERCEDED 2

REGISTERED PROFESSIONAL ENGINEER SYN YEE CHIN No. 18186 Exp. 09/30/2011 ELECTRICAL STATE OF CALIFORNIA

Syn Yee Chin
FOR REVISION ONLY
1 2

CONDUIT DATA

Conduit No	Reference	Size	Type	Total Fill (mm2)	Allowable Fill (mm2)	Included Cable No.	Conductor Type
2862	E-135	41	RGS conduit	0.00	534.55	Pull rope	Soft-Fiber Polyester
2863	E-135	41	RGS conduit	0.00	534.55	Pull rope	Soft-Fiber Polyester
2864	E-135	41	RGS conduit	0.00	534.55	Pull rope	Soft-Fiber Polyester
2865	E-135	41	RGS conduit	0.00	534.55	Pull rope	Soft-Fiber Polyester
2866	E-136	41	RGS conduit	0.00	534.55	Pull rope	Soft-Fiber Polyester
2867	E-136	41	RGS conduit	0.00	534.55	Pull rope	Soft-Fiber Polyester
2868	E-136	41	RGS conduit	0.00	534.55	Pull rope	Soft-Fiber Polyester
2869	E-136	41	RGS conduit	0.00	534.55	Pull rope	Soft-Fiber Polyester
2870	E-136	41	RGS conduit	0.00	534.55	Pull rope	Soft-Fiber Polyester
2871	E-136	41	RGS conduit	212.85	534.55	Pull rope	Soft-Fiber Polyester
						2 LP220-6A,8A	3 + 1 gnd #6,#8, 600 V, RHH/RHW insulation
2872	E-136	41	RGS conduit	0.00	534.55	Pull rope	Soft-Fiber Polyester
2873	E-136	41	RGS conduit	212.85	534.55	A-2012-2	3 + 1 gnd #6,#8, 600 V, RHH/RHW insulation
						Pull rope	Soft-Fiber Polyester
2874	E-136	41	RGS conduit	324.29	534.55	Pull rope	Soft-Fiber Polyester
						A-3039-3	1-3/C + gnd #6, 600 V, EPR insulation
2875	E-136	41	RGS conduit	0.00	534.55	Pull rope	Soft-Fiber Polyester
2876	E-136	41	RGS conduit	0.00	534.55	Pull rope	Soft-Fiber Polyester
2877	E-136	41	RGS conduit	0.00	534.55	Pull rope	Soft-Fiber Polyester
2878	E-137	41	RGS conduit	0.00	534.55	Pull rope	Soft-Fiber Polyester
2879	E-137	41	RGS conduit	0.00	534.55	Pull rope	Soft-Fiber Polyester
2880	E-137	41	RGS conduit	212.85	534.55	Pull rope	Soft-Fiber Polyester
						2 LP221-6A,8A	3 + 1 gnd #6,#8, 600 V, RHH/RHW insulation
2881	E-137	41	RGS conduit	0.00	534.55	Pull rope	Soft-Fiber Polyester
2882	E-137	41	RGS conduit	0.00	534.55	Pull rope	Soft-Fiber Polyester
2883	E-137	41	RGS conduit	0.00	534.55	Pull rope	Soft-Fiber Polyester
2884	E-137	41	RGS conduit	0.00	534.55	Pull rope	Soft-Fiber Polyester
2885	E-137	41	RGS conduit	0.00	534.55	Pull rope	Soft-Fiber Polyester
2886	E-137	41	RGS conduit	0.00	534.55	Pull rope	Soft-Fiber Polyester
2887	E-137	41	RGS conduit	0.00	534.55	Pull rope	Soft-Fiber Polyester
2888	E-137	41	RGS conduit	0.00	534.55	Pull rope	Soft-Fiber Polyester
2889	E-138	41	RGS conduit	0.00	534.55	Pull rope	Soft-Fiber Polyester
2890	E-138	41	RGS conduit	0.00	534.55	Pull rope	Soft-Fiber Polyester
2891	E-138	41	RGS conduit	0.00	534.55	Pull rope	Soft-Fiber Polyester
2892	E-138	41	RGS conduit	0.00	534.55	Pull rope	Soft-Fiber Polyester
2893	E-138	41	RGS conduit	0.00	534.55	Pull rope	Soft-Fiber Polyester
2894	E-138	41	RGS conduit	0.00	534.55	Pull rope	Soft-Fiber Polyester
2895	E-138	41	RGS conduit	212.85	534.55	Pull rope	Soft-Fiber Polyester
						2 LP222-6A,8A	3 + 1 gnd #6,#8, 600 V, RHH/RHW insulation
2896	E-138	41	RGS conduit	0.00	534.55	Pull rope	Soft-Fiber Polyester
2897	E-138	41	RGS conduit	0.00	534.55	Pull rope	Soft-Fiber Polyester
2898	E-138	41	RGS conduit	0.00	534.55	Pull rope	Soft-Fiber Polyester

CONDUIT DATA

Conduit No	Reference	Size	Type	Total Fill (mm2)	Allowable Fill (mm2)	Included Cable No.	Conductor Type
2899	E-138	41	RGS conduit	0.00	534.55	Pull rope	Soft-Fiber Polyester
2900	E-138	41	RGS conduit	0.00	534.55	Pull rope	Soft-Fiber Polyester
2901	E-139	41	RGS conduit	0.00	534.55	Pull rope	Soft-Fiber Polyester
2902	E-139	41	RGS conduit	0.00	534.55	Pull rope	Soft-Fiber Polyester
2903	E-139	41	RGS conduit	0.00	534.55	Pull rope	Soft-Fiber Polyester
2904	E-139	41	RGS conduit	0.00	534.55	Pull rope	Soft-Fiber Polyester
2905	E-139	41	RGS conduit	0.00	534.55	Pull rope	Soft-Fiber Polyester
2906	E-139	41	RGS conduit	0.00	534.55	Pull rope	Soft-Fiber Polyester
2907	E-139	41	RGS conduit	0.00	534.55	Pull rope	Soft-Fiber Polyester
2908	E-139	41	RGS conduit	0.00	534.55	Pull rope	Soft-Fiber Polyester
2909	E-139	41	RGS conduit	0.00	534.55	Pull rope	Soft-Fiber Polyester
2910	E-139	41	RGS conduit	212.85	534.55	Pull rope	Soft-Fiber Polyester
						2 LP223-6A,8A	3 + 1 gnd #6,#8, 600 V, RHH/RHW insulation
2911	E-139	41	RGS conduit	0.00	534.55	Pull rope	Soft-Fiber Polyester
2912	E-140	41	RGS conduit	0.00	534.55	Pull rope	Soft-Fiber Polyester
2913	E-140	41	RGS conduit	0.00	534.55	Pull rope	Soft-Fiber Polyester
2914	E-140	41	RGS conduit	0.00	534.55	Pull rope	Soft-Fiber Polyester
2915	E-140	41	RGS conduit	0.00	534.55	Pull rope	Soft-Fiber Polyester
2916	E-140	41	RGS conduit	0.00	534.55	Pull rope	Soft-Fiber Polyester
2917	E-140	41	RGS conduit	0.00	534.55	Pull rope	Soft-Fiber Polyester
2950	E-136	41	RGS conduit	0.00	534.55	Pull rope	Soft-Fiber Polyester
2951	E-139	41	RGS conduit	0.00	534.55	Pull rope	Soft-Fiber Polyester
2952	E-139	41	RGS conduit	0.00	534.55	Pull rope	Soft-Fiber Polyester
2953	E-139	41	RGS conduit	0.00	534.55	Pull rope	Soft-Fiber Polyester
2954	E-139	41	RGS conduit	0.00	534.55	Pull rope	Soft-Fiber Polyester
2955	E-139	41	RGS conduit	0.00	534.55	Pull rope	Soft-Fiber Polyester
2956	E-139	41	RGS conduit	0.00	534.55	Pull rope	Soft-Fiber Polyester
2957	E-139	41	RGS conduit	0.00	534.55	Pull rope	Soft-Fiber Polyester 2
2958	E-139	41	RGS conduit	0.00	534.55	Pull rope	Soft-Fiber Polyester

For continuation, see next sheet.

CONDUIT AND TRAY SCHEDULE

E-417

REVISED BY	DATE REVISED
PBP	8/02

CALCULATED/DESIGNED BY	AB
CHECKED BY	8/02

DESIGN OVERSIGHT
BEHZAD GOLEMOHAMMADI

STATE OF CALIFORNIA - DEPARTMENT OF TRANSPORTATION
Caltrans

LAST REVISION 00-00-00

DATE PLOTTED => 15-APR-2011
TIME PLOTTED => 13:22

CONDUIT DATA

Conduit No	Reference	Size	Type	Total Fill (mm²)	Allowable Fill (mm²)	Included Cable No.	Conductor Type
2959	E-139	41	RGS conduit	0.00	534.55	Pull rope	Soft-Fiber Polyester
2960	E-139	41	RGS conduit	212.85 △7	534.55	Pull rope	Soft-Fiber Polyester
						LP223-2A,4A	3 + 1 gnd #6,#8, 600 V, RHH/RHW Insulation △7
2961	E-139	41	RGS conduit	0.00	534.55	Pull rope	Soft-Fiber Polyester
2962	E-138	41	RGS conduit	0.00	534.55	Pull rope	Soft-Fiber Polyester
2963	E-138	41	RGS conduit	0.00	534.55	Pull rope	Soft-Fiber Polyester
2964	E-138	41	RGS conduit	0.00	534.55	Pull rope	Soft-Fiber Polyester
2965	E-138	41	RGS conduit	0.00	534.55	Pull rope	Soft-Fiber Polyester
2966	E-138	41	RGS conduit	0.00	534.55	Pull rope	Soft-Fiber Polyester
2967	E-138	41	RGS conduit	0.00	534.55	Pull rope	Soft-Fiber Polyester
2T13	E-181 Thru E-186	305	152.4 mm siderail ladder tray	2780.99	8387.08	Pull rope	Soft-Fiber Polyester
	E-212A					2391	3-1/C #4/0 + 1/C #1/0 gnd, 15kV, EPR insulation
2T14	E-212, E-21B	305	152.4 mm siderail ladder tray	2780.99	8387.08	Pull rope	Soft-Fiber Polyester
						2391	3-1/C #4/0 + 1/C #1/0 gnd, 15kV, EPR insulation
2T14A	E-21, E-21E	305	152.4 mm siderail ladder tray	0.00	8387.08		
2T14B	E-21, E-21E	305	152.4 mm siderail ladder tray	0.00	△7 8387.08		
2T21	E182,E207C,E264	610	152.4 mm siderail ladder tray	2120.21	16774.16	2121	1-3/C + gnd #1/0,600 V, EPR insulation
						2120	1-3/C + gnd #1/0,600 V, EPR insulation
						1201-1	1-2/C + gnd #10, 600 V, EPR insulation
						1201-2	1-2/C + gnd #10, 600 V, EPR insulation
						1201-6	1-2/C + gnd #10, 600 V, EPR insulation
						1201-4A	1-2/C #14, 600 V, EPR insulation
						1201-4B	1-2/C #14, 600 V, EPR insulation
						1201-4C	1-2/C #14, 600 V, EPR insulation
2T23	E-114B	760	152.4 mm siderail ladder tray	22305.81 △7	22580.60	2202-2	1-3/C #14,600 V, EPR insulation
						A-3004-1	1-3/C + gnd #2,600 V, EPR insulation
						A-3003-1	1-3/C + gnd #4,600 V, EPR insulation
						A-2013-1	1-3/C + gnd #2,600 V, EPR insulation
						A-2012-1	1-3/C + gnd #2,600 V, EPR insulation
						2123	1-3/C + gnd #2,600 V, EPR insulation
						2202-3	1-7/C #16,600 V, EPR insulation
						2105	1-3/C + gnd #2,600 V, EPR insulation
						2106	1-3/C + gnd #2,600 V, EPR insulation
						2202-4	1-3/C #14,600 V, EPR insulation
						2104	1-3/C + gnd #2,600 V, EPR insulation
						2121	1-3/C + gnd #1/0,600 V, EPR insulation
						2204-1	1-3/C #14, 600 V, EPR insulation
						UP204-7	1-2/C + gnd #8,600 V, EPR insulation
						2119-A	1-3/C + gnd 250 Kcmil,600 V, EPR insulation
						CCTVE01BA	TVP
						CCTVE01BB	TVCP
						CCTVE01AA	TVP
						2201-2	1-2/C + gnd #10,600 V, EPR insulation
						2123-2	1-3/C + gnd #2/0,600 V, EPR insulation
						2123-3	1-3/C + gnd #2/0,600 V, EPR insulation
						1118	1-3/C + gnd #2/0,600 V, EPR insulation
						2095	1-3/C + gnd #2,600 V, EPR insulation
						2096	1-3/C + gnd #2,600 V, EPR insulation
						2097	1-3/C + gnd #2,600 V, EPR insulation
						2098	1-3/C + gnd #2,600 V, EPR insulation
						2099	1-3/C + gnd #2,600 V, EPR insulation
						S-3053-1	1-3/C + gnd #2,600 V, EPR insulation
						2107	1-3/C + gnd #2,600 V, EPR insulation
						2120	1-3/C + gnd #1/0,600 V, EPR insulation
						2201-6	1-2/C + gnd #10,600 V, EPR insulation
						1201-1	1-2/C + gnd #10,600 V, EPR insulation
						2202-1	1-2/C + gnd #10,600 V, EPR insulation
						1201-2	1-2/C + gnd #10,600 V, EPR insulation
						1201-6	1-2/C + gnd #10,600 V, EPR insulation
						2204-2	1-3/C #16,600 V, EPR insulation
						Pull rope	Soft-Fiber Polyester
						A-3041-1	1-3/C + gnd #2,600 V, EPR insulation
						S-3052-1	1-3/C + gnd #2,600 V, EPR insulation
						2125	1-3/C + gnd 250 Kcmil,600 V, EPR insulation
						2103	1-3/C + gnd #2,600 V, EPR insulation
						S-3056-9	1-4/C #14,600 V, EPR insulation
						CCTVE01AB	TVCP
						S-3056-6	1-4/C #14,600 V, EPR insulation
						2202-3A	1-2/C #14, 600 V, EPR insulation
						2201-4B	1-2/C #14, 600 V, EPR insulation
						2201-4C	1-2/C #14, 600 V, EPR insulation
						1201-4A	1-2/C #14, 600 V, EPR insulation
						1201-4B	1-2/C #14, 600 V, EPR insulation
						1201-4C	1-2/C #14, 600 V, EPR insulation

REQUEST FOR INFORMATION NOT ADDRESSED IN THIS CCO REMAIN IN FORCE

MARK	DATE	DESCRIPTIONS	BY	CH'D	CCO#
△7	03/24/11	BIKE PATH CONDUIT	TW	RG	73
△6	01/07/11	ELECTRICAL WARNING SYSTEMS	TW	RG	61
△5	06/11/10	BIKE PATH CONDUIT	TW	RG	73
△4	03/26/10	DEHUMIDIFIER SCADA INTERFACE	RR	RG FW	130
△3	03/30/09	SERVICE PLATFORM ELECTRICAL CHANGES	RY RR	RG MP	55
△2	02/25/08	CABLE TRAY CHANGES	RR TW	RG	42S1
△1	03/04/08	BARRIER MODIFICATIONS	JS BM	RG	44

REVISIONS

CONTRACT CHANGE ORDER NO. 73
SHEET 35 OF 52

△5 REVISIONS SUPERCEDED △7

Caltrans Metric

DIST	COUNTY	ROUTE	KILOMETER POST TOTAL PROJECT	SHEET No	TOTAL SHEETS
04	SF	80	13.2/13.9	373 R7	1204

12/19/02
REGISTERED ELECTRICAL ENGINEER DATE

12-6-04
PLANS APPROVAL DATE

REGISTERED PROFESSIONAL ENGINEER JENS ERLINGSSON No. 8249 Exp. 9/30/06 ELECTRICAL STATE OF CALIFORNIA

PB POWER, Inc.
A Parsons Brinckerhoff Company
303 Second St., Suite 700N
San Francisco, CA 94107-1317

The State of California or its officers or agents shall not be responsible for the accuracy or completeness of electronic copies of this plan sheet.

Caltrans now has a web site! To get to the web site, go to: http://www.dot.ca.gov

REGISTERED PROFESSIONAL ENGINEER SYN YEE CHIN No. 18186 Exp. 09/30/2011 ELECTRICAL STATE OF CALIFORNIA

Syn Yee Chin
FOR REVISION ONLY
△4△5△6△7

REGISTERED PROFESSIONAL ENGINEER FADI WALIEDDINE No. 11465 Exp. 12/31/2009 ELECTRICAL STATE OF CALIFORNIA △3

FOR REVISION ONLY

REGISTERED PROFESSIONAL ENGINEER S. A. ESTOQUE, JR. No. E-10151 Exp. 12/31/2009 ELECTRICAL STATE OF CALIFORNIA △1△2

FOR REVISION ONLY

CONDUIT DATA

Conduit No	Reference	Size	Type	Total Fill (mm²)	Allowable Fill (mm²)	Included Cable No.	Conductor Type
						LP219-2,4	1-3/C + gnd #6,600 V, EPR insulation
						LP219-6,8	1-3/C + gnd #6,600 V, EPR insulation
						LP220-2,4	1-3/C + gnd #6,600 V, EPR insulation
						LP220-6,8	1-3/C + gnd #6,600 V, EPR insulation
						LP221-2,4	1-3/C + gnd #6,600 V, EPR insulation
						LP221-6,8	1-3/C + gnd #6,600 V, EPR insulation
						LP222-2,4	1-3/C + gnd #6,600 V, EPR insulation
						LP222-6,8	1-3/C + gnd #6,600 V, EPR insulation
						LP223-2,4	1-3/C + gnd #6,600 V, EPR insulation
					△7	LP223-6,8	1-3/C + gnd #6,600 V, EPR insulation

For continuation, see next sheet.

CONDUIT AND TRAY SCHEDULE

E-418

STATE OF CALIFORNIA - DEPARTMENT OF TRANSPORTATION
Caltrans

DESIGN OVERSIGHT
BEHZAD GOLEMOHAMMADI

CALCULATED/DESIGNED BY PBP
CHECKED BY AB
DATE 8/02 8/02
REVISED BY
DATE REVISED

LAST REVISION 00-00-00
DATE PLOTTED => 15-APR-2011
TIME PLOTTED => 13:23

FOR REDUCED PLANS ORIGINAL SCALE IS IN MILLIMETERS 0 20 40 60 80

DGN FILE =>04-0120f1_0373R07.dgn
USERNAME =>llorico

CU 04251 EA 0120F1

DIST	COUNTY	ROUTE	KILOMETER POST TOTAL PROJECT	SHEET No	TOTAL SHEETS
04	SF	80	13.2/13.9	373 S1R1	1204

REGISTERED ELECTRICAL ENGINEER Syn Yee Chin DATE 01/07/11

PLANS APPROVAL DATE

REGISTERED PROFESSIONAL ENGINEER SYN YEE CHIN No. 18186 Exp. 09/30/2011 ELECTRICAL STATE OF CALIFORNIA

PB AMERICAS, Inc.
A Parsons Brinckerhoff Company
303 Second St., Suite 700N
San Francisco, CA 94107-1317

The State of California or its officers or agents shall not be responsible for the accuracy or completeness of electronic copies of this plan sheet.

Caltrans now has a web site! To get to the web site, go to http://www.dot.ca.gov

Caltrans Metric

REQUEST FOR INFORMATION NOT ADDRESSED IN THIS CCO REMAIN IN FORCE

MARK	DATE	DESCRIPTIONS	BY	CH'D	CCO#
1	03/24/11	BIKE PATH CONDUIT	TW	RG	73
0	01/07/11	ELECTRICAL WARNING SYSTEMS	TW	RG	61

REVISIONS

CONTRACT CHANGE ORDER NO. 73
SHEET 36 OF 52

CONDUIT DATA

Conduit No	Reference	Size	Type	Total Fill (mm²)	Allowable Fill (mm²)	Included Cable No.	Conductor Type
2T24	E-114, E-182	610	152.4 mm siderail ladder tray	2191.50	18064.48	LP219-2,4	1-3/C + gnd #6, 600 V, EPR insulation
						LP219-6,8	1-3/C + gnd #6, 600 V, EPR insulation
						Pull rope	Soft-Fiber Polyester
						UP204-7	1-2/C + gnd #8,600 V, EPR insulation
						UP204-1	1-2/C + gnd #10,600 V, EPR insulation
						UP204-8	1-2/C + gnd #8,600 V, EPR insulation
						2103	1-3/C + gnd #2,600 V, EPR insulation
						2095	1-3/C + gnd #2,600 V, EPR insulation
2T25	E-115, E-182	610	152.4 mm siderail ladder tray	3155.19	18064.48	UP205-7	1-2/C + gnd #8,600 V, EPR insulation
						UP205-1	1-2/C + gnd #10,600 V, EPR insulation
						LP220-2,4	1-3/C + gnd #6,600 V, EPR insulation
						LP220-6,8	1-3/C + gnd #6,600 V, EPR insulation
						Pull rope	Soft-Fiber Polyester
						S-3056-6	1-4/C #14,600 V, EPR insulation
						2202-2	1-3/C #14,600 V, EPR insulation
						2204-2	1-3/C #16,600 V, EPR insulation
						2096	1-3/C + gnd #2,600 V, EPR insulation
						2204-1	1-3/C #14, 600 V, EPR insulation
						2104	1-3/C + gnd #2,600 V, EPR insulation
						UP205-8	1-2/C + gnd #8,600 V, EPR insulation
						2202-3	1-7/C #16,600 V, EPR insulation
						1201-1	1-2/C + gnd #10, 600 V, EPR insulation
						1201-2	1-2/C + gnd #10, 600 V, EPR insulation
						1201-6	1-2/C + gnd #10, 600 V, EPR insulation
						1201-4A	1-2/C #14, 600 V, EPR insulation
						1201-4B	1-2/C #14, 600 V, EPR insulation
						1201-4C	1-2/C #14, 600 V, EPR insulation
2T26	E-117, E-183	610	152.4 mm siderail ladder tray	3094.52	18064.48	2202-1	1-2/C + gnd #10, 600 V, EPR insulation
						CCTVE01BA	TVP
						LP221-2,4	1-3/C + gnd #6,600 V, EPR insulation
						Pull rope	Soft-Fiber Polyester
						CCTVE01AB	TVCP
						CCTVE01AA	TVP
						CCTVE01BB	TVCP
						LP221-6,8	1-3/C + gnd #6,600 V, EPR insulation
						UP206-7	1-2/C + gnd #8,600 V, EPR insulation
						UP207-1	1-2/C + gnd #10,600 V, EPR insulation
						UP206-1	1-2/C + gnd #10,600 V, EPR insulation
						2202-2	1-3/C #14, 600 V, EPR insulation
						2105	1-3/C + gnd #2,600 V, EPR insulation
						2097	1-3/C + gnd #2,600 V, EPR insulation
						UP206-8	1-2/C + gnd #8,600 V, EPR insulation
						2202-3	1-7/C #16,600 V, EPR insulation
						2202-3A	1-2/C #14, 600 V, EPR insulation

THIS PLAN ACCURATE FOR ELECTRICAL WORK ONLY.

CONDUIT DATA

Conduit No	Reference	Size	Type	Total Fill (mm²)	Allowable Fill (mm²)	Included Cable No.	Conductor Type

For continuation, see next sheet.

CONDUIT AND TRAY SCHEDULE

E-418A

STATE OF CALIFORNIA - DEPARTMENT OF TRANSPORTATION
Caltrans

DESIGN OVERSIGHT
BEHZAD GOLEMOHAMMADI

CALCULATED/DESIGNED BY
CHECKED BY

DATE XX/10 XX/10 XX

REVISED BY
DATE REVISED

LAST REVISION 00-00-00

DATE PLOTTED => 15-APR-2011
TIME PLOTTED => 13:23

DIST	COUNTY	ROUTE	KILOMETER POST TOTAL PROJECT	SHEET No	TOTAL SHEETS
04	SF	80	13.2/13.9	374 R7	1204

Jens Erlingsson 12/19/02
REGISTERED ELECTRICAL ENGINEER DATE

12-6-04
PLANS APPROVAL DATE

REGISTERED PROFESSIONAL ENGINEER JENS ERLINGSSON No. 8249 Exp. 9/30/06 ELECTRICAL STATE OF CALIFORNIA

PB POWER, Inc.
A Parsons Brinckerhoff Company
303 Second St., Suite 700N
San Francisco, CA 94107-1317

The State of California or its officers or agents shall not be responsible for the accuracy or completeness of electronic copies of this plan sheet.

Caltrans now has a web site! To get to the web site, go to: http://www.dot.ca.gov

Caltrans Metric

REQUEST FOR INFORMATION NOT ADDRESSED IN THIS CCO REMAIN IN FORCE

MARK	DATE	DESCRIPTIONS	BY	CH'D	CCO#
		REVISIONS			
7	03/24/11	BIKE PATH CONDUIT	TW	RG	73
6	01/07/11	ELECTRICAL WARNING SYSTEMS	TW	RG	61
5	06/11/10	BIKE PATH CONDUIT	TW	RG	73
4	02/01/10	DEHUMIDIFIER SCADA INTERFACE	RR	RG FW	130
3	03/30/09	SERVICE PLATFORM ELECTRICAL CHANGES	RY RR	RG MP	55
2	02/25/08	CABLE TRAY CHANGES	TW	RG	42S1
1	03/04/08	BARRIER MODIFICATIONS	JS BM	RG SE	44

CONTRACT CHANGE ORDER NO. 73
SHEET 37 OF 52

5 REVISIONS SUPERCEDED 7

REGISTERED PROFESSIONAL ENGINEER SYN YEE CHIN No. 18186 Exp. 09/30/2011 ELECTRICAL STATE OF CALIFORNIA
Syn Yee Chin
FOR REVISION ONLY 5 6 7

REGISTERED PROFESSIONAL ENGINEER FADI WALIEDDINE No. 11465 Exp. 12/31/2011 ELECTRICAL STATE OF CALIFORNIA
FOR REVISION ONLY 3 4

REGISTERED PROFESSIONAL ENGINEER S. A. ESTOQUE, JR. No. E-10151 Exp. 12/31/2008 ELECTRICAL STATE OF CALIFORNIA
FOR REVISION ONLY 1 2

CONDUIT DATA

Conduit No	Reference	Size	Type	Total Fill (mm²)	Allowable Fill (mm²)	Included Cable No.	Conductor Type
2T27	E-118, E-184	610	152.4 mm siderail ladder tray	2369.55	18064.48	LP222-6,8	1-3/C + gnd #6,600 V, EPR insulation 7
				7		2098	1-3/C + gnd #2,600 V, EPR insulation
						2106	1-3/C + gnd #2,600 V, EPR insulation
						UP207-8	1-2/C + gnd #8,600 V, EPR insulation
						UP207-7	1-2/C + gnd #8,600 V, EPR insulation
						Pull rope	Soft-Fiber Polyester
						LP222-2,4	1-3/C + gnd #6,600 V, EPR insulation
						UP207-1	1-2/C + gnd #10,600 V, EPR insulation
						UP207-11	1-2/C + gnd #8,600 V, EPR insulation
2T28	E-119, E-185	610	152.4 mm siderail ladder tray	2833.85	18064.48		
				7		UP208-6	1-2/C + gnd #8,600 V, EPR insulation
						Pull rope	Soft-Fiber Polyester 7
						LP223-2,4	1-3/C + gnd #6,600 V, EPR insulation
						UP208-7	1-2/C + gnd #8,600 V, EPR insulation
						2107	1-3/C + gnd #2,600 V, EPR insulation
						LP223-6,8	1-3/C + gnd #6,600 V, EPR insulation
					7	2201-5	1-3/C #14,600 V, EPR insulation
						UP208-8	1-2/C + gnd #8,600 V, EPR insulation 7
						2201-6	1-2/C + gnd #10, 600 V, EPR insulation
						S-3056-9	1-4/C #14,600 V, EPR insulation
						2099	1-3/C + gnd #2,600 V, EPR insulation
						2201-2	1-2/C + gnd #10,600 V, EPR insulation
						2201-4B	1-2/C #14,600 V, EPR insulation
						2201-4C	1-2/C #14,600 V, EPR insulation
2T29	E-212, E-21B	610	152.4 mm siderail ladder tray	16623.79	18064.48	2123-3	1-3/C + gnd #2/0,600 V, EPR insulation
						Pull rope	Soft-Fiber Polyester
						2119-A	1-3/C + gnd 250 kcmil,600 V, EPR insulation
						2121	1-3/C + gnd #1/0,600 V, EPR insulation
						A-3004-1	1-3/C + gnd #2,600 V, EPR insulation
						A-3003-1	1-3/C + gnd #4,600 V, EPR insulation
						A-2012-1	1-3/C + gnd #2,600 V, EPR insulation
						2123	1-3/C + gnd #2,600 V, EPR insulation
						2105	1-3/C + gnd #2,600 V, EPR insulation
						2104	1-3/C + gnd #2,600 V, EPR insulation
						2125	1-3/C + gnd 250 kcmil,600 V, EPR insulation
						2123-2	1-3/C + gnd #2/0,600 V, EPR insulation
						2106	1-3/C + gnd #2,600 V, EPR insulation
						1118	1-3/C + gnd #2/0,600 V, EPR insulation
						2095	1-3/C + gnd #2,600 V, EPR insulation
						2096	1-3/C + gnd #2,600 V, EPR insulation
						2097	1-3/C + gnd #2,600 V, EPR insulation
						2098	1-3/C + gnd #2,600 V, EPR insulation
						2099	1-3/C + gnd #2,600 V, EPR insulation
						2103	1-3/C + gnd #2,600 V, EPR insulation
						2107	1-3/C + gnd #2,600 V, EPR insulation
						A-3041-1	1-3/C + gnd #2,600 V, EPR insulation
						S-3053-1	1-3/C + gnd #2,600 V, EPR insulation
						S-3052-1	1-3/C + gnd #2,600 V, EPR insulation
						2120	1-3/C + gnd #1/0,600 V, EPR insulation
						A-2013-1	1-3/C + gnd #2,600 V, EPR insulation
2T33	E-114B	760	152.4 mm siderail ladder tray	15691.30	22580.60	A-2011-1	1-3/C + gnd #2,600 V, EPR insulation
				7		UP208-2A	1-2/C + gnd #8,600 V, EPR insulation
						UP208-4A	1-2/C + gnd #8,600 V, EPR insulation
						UP208-6	1-2/C + gnd #8,600 V, EPR insulation
					7	Pull rope	Soft-Fiber Polyester
						A-3057-1	1-3/C + gnd #2,600 V, EPR insulation
						A-2014-1	1-3/C + gnd #2,600 V, EPR insulation
						UP204-8	1-2/C + gnd #8,600 V, EPR insulation
						UP205-8	1-2/C + gnd #8,600 V, EPR insulation
						UP207-8	1-2/C + gnd #8,600 V, EPR insulation
						UP205-1	1-2/C + gnd #10,600 V, EPR insulation
						UP207-7	1-2/C + gnd #8,600 V, EPR insulation
						A-3039-3	1-3/C + gnd #6,600 V, EPR insulation
						A-3040-3	1-3/C + gnd #6,600 V, EPR insulation
						A-3005-1	1-3/C + gnd #2,600 V, EPR insulation
						A-3006-1	1-3/C + gnd #4,600 V, EPR insulation
						A-3031-1	1-3/C + gnd #4,600 V, EPR insulation

THIS PLAN ACCURATE FOR ELECTRICAL WORK ONLY.

CONDUIT DATA

Conduit No	Reference	Size	Type	Total Fill (mm²)	Allowable Fill (mm²)	Included Cable No.	Conductor Type
						A-3032-1	1-3/C + gnd #4,600 V, EPR insulation
						A-3039-1	1-3/C + gnd #2,600 V, EPR insulation
						A-3040-1	1-3/C + gnd #2,600 V, EPR insulation
						UP204-1	1-2/C + gnd #10,600 V, EPR insulation 7
						UP206-8	1-2/C + gnd #8,600 V, EPR insulation
						S-2032-1	1-3/C + gnd #4,600 V, EPR insulation
						A-3036-1	1-3/C + gnd #4,600 V, EPR insulation
						A-2035-1	1-3/C + gnd #6,600 V, EPR insulation
						A-2035-3	1-3/C + gnd #6,600 V, EPR insulation
						UP205-7	1-2/C + gnd #8,600 V, EPR insulation
						UP206-7	1-2/C + gnd #8,600 V, EPR insulation 7
						A-3035-1	1-3/C + gnd #4,600 V, EPR insulation
						A-3034-1	1-3/C + gnd #2,600 V, EPR insulation
						UP207-1	1-2/C + gnd #10,600 V, EPR insulation
						S-2031-1	1-3/C + gnd #2,600 V, EPR insulation
						UP206-1	1-2/C + gnd #10,600 V, EPR insulation
						1201-2	1-2/C + gnd #10,600 V, EPR insulation 7
						UP208-7	1-2/C + gnd #8,600 V, EPR insulation
						1201-6	1-2/C + gnd #10,600 V, EPR insulation 7
						A-3043-1	1-3/C + gnd #2,600 V, EPR insulation
						A-3042-1	1-3/C + gnd #2,600 V, EPR insulation
						2119-B	1-3/C + gnd 250 kcmil,600 V, EPR insulation
						A-3033-1	1-3/C + gnd #2,600 V, EPR insulation
						UP208-8	1-2/C + gnd #8,600 V, EPR insulation
2T39	E-212, E-21	610	152.4 mm siderail ladder tray	9889.17	18064.48	A-3032-1	1-3/C + gnd #4,600 V, EPR insulation
						2119-B	1-3/C + gnd 250 kcmil,600 V, EPR insulation
						A-2035-1	1-3/C + gnd #6,600 V, EPR insulation
						S-2032-1	1-3/C + gnd #4,600 V, EPR insulation
						S-2031-1	1-3/C + gnd #2,600 V, EPR insulation
						A-3036-1	1-3/C + gnd #4,600 V, EPR insulation
						A-3035-1	1-3/C + gnd #4,600 V, EPR insulation
						A-3034-1	1-3/C + gnd #2,600 V, EPR insulation
						A-3033-1	1-3/C + gnd #2,600 V, EPR insulation
						Pull rope	Soft-Fiber Polyester
						A-3039-1	1-3/C + gnd #2,600 V, EPR insulation
						A-3042-1	1-3/C + gnd #2,600 V, EPR insulation
						A-3031-1	1-3/C + gnd #4,600 V, EPR insulation
						A-3006-1	1-3/C + gnd #4,600 V, EPR insulation
						A-3005-1	1-3/C + gnd #2,600 V, EPR insulation
						A-2014-1	1-3/C + gnd #2,600 V, EPR insulation
						A-2011-1	1-3/C + gnd #2,600 V, EPR insulation
						A-3057-1	1-3/C + gnd #2,600 V, EPR insulation
						A-3043-1	1-3/C + gnd #2,600 V, EPR insulation
						A-3040-1	1-3/C + gnd #2,600 V, EPR insulation

For continuation, see next sheet.

CONDUIT AND TRAY SCHEDULE

E-419

STATE OF CALIFORNIA - DEPARTMENT OF TRANSPORTATION
Caltrans

DESIGN OVERSIGHT
BEHZAD GOLEMOHAMMADI

CALCULATED/DESIGNED BY PBP
CHECKED BY AB

DATE 8/02 | REVISED BY | DATE REVISED

LAST REVISION 00-00-00
DATE PLOTTED => 15-APR-2011
TIME PLOTTED => 13:23

DIST	COUNTY	ROUTE	KILOMETER POST TOTAL PROJECT	SHEET No	TOTAL SHEETS
04	SF	80	13.2/13.9	394 R4	1204

Jens Erlingsson 12/19/02
REGISTERED ELECTRICAL ENGINEER DATE

12-6-04
PLANS APPROVAL DATE

REGISTERED PROFESSIONAL ENGINEER JENS ERLINGSSON No. 8249 Exp. 9/30/06 ELECTRICAL STATE OF CALIFORNIA

PB POWER, Inc.
A Parsons Brinckerhoff Company
303 Second St., Suite 700N
San Francisco, CA 94107-1317

The State of California or its officers or agents shall not be responsible for the accuracy or completeness of electronic copies of this plan sheet.

Caltrans now has a web site! To get to the web site, go to http://www.dot.ca.gov

Caltrans Metric

REQUEST FOR INFORMATION NOT ADDRESSED IN THIS CCO REMAIN IN FORCE					
4	03/24/11	BIKE PATH CONDUIT	TW	RG	73
3	06/11/10	BIKE PATH CONDUIT	TW	RG	73
2	03/30/09	SERVICE PLATFORM ELECTRICAL CHANGES	RR RY	RG MP	55
1	03/04/08	BARRIER MODIFICATIONS	JS BM	RG SE	44
MARK	DATE	DESCRIPTIONS	BY	CH'D	CCO#
		REVISIONS			

CONTRACT CHANGE ORDER NO. 73
SHEET 38 OF 52

REGISTERED PROFESSIONAL ENGINEER S. A. ESTOQUE, JR. No. E-10151 Exp. 12/31/2008 ELECTRICAL STATE OF CALIFORNIA
FOR REVISION ONLY 1

REGISTERED PROFESSIONAL ENGINEER FADI WALIEDDINE No. 11465 Exp. 12/31/2009 ELECTRICAL STATE OF CALIFORNIA
FOR REVISION ONLY 2

REGISTERED PROFESSIONAL ENGINEER SYN YEE CHIN No. 18186 Exp. 09/30/2011 ELECTRICAL STATE OF CALIFORNIA
Syn Yee Chin
FOR REVISION ONLY 3 4

3 REVISIONS SUPERCEDED 4

CONDUIT DATA

Conduit No	Reference	Size	Type	Total Fill (mm²)	Allowable Fill (mm²)	Included Cable No.	Conductor Type
5002	E-71A	53	Liquidtight Flex. Metal Cond.	0.00	879.42	Pull rope	Soft-Fiber Polyester
5004	E-71A	53	Liquidtight Flex. Metal Cond.	562.30	649.22	Pull rope	Soft-Fiber Polyester
				4		LP219-2,4	1-3/C + gnd #6, 600 V, EPR insulation
						LP219-6,8	1-3/C + gnd #6, 600 V, EPR insulation
5005	E-71A	53	Liquidtight Flex. Metal Cond.	0.00	879.42	Pull rope	Soft-Fiber Polyester
5006	E-71A	53	Liquidtight Flex. Metal Cond.	0.00	879.42	Pull rope	Soft-Fiber Polyester
5026	E-72A	53	Liquidtight Flex. Metal Cond.	205.22	649.22	UP205-9	1-2/C + gnd #12, 600 V, EPR insulation
					4	UP205-11	1-2/C + gnd #12, 600 V, EPR insulation
						Pull rope	Soft-Fiber Polyester
5027	E-72A	53	Liquidtight Flex. Metal Cond.	0.00	879.42	Pull rope	Soft-Fiber Polyester
5029	E-72A	53	Liquidtight Flex. Metal Cond.	562.30	649.22	LP220-2,4	1-3/C + gnd #6, 600 V, EPR insulation
				4		Pull rope	Soft-Fiber Polyester
						LP220-6,8	1-3/C + gnd #6, 600 V, EPR insulation
5030	E-72A	53	Liquidtight Flex. Metal Cond.	0.00	879.42	Pull rope	Soft-Fiber Polyester
5031	E-72A	53	Liquidtight Flex. Metal Cond.	0.00	879.42	Pull rope	Soft-Fiber Polyester
5051	E-73A	53	Liquidtight Flex. Metal Cond.	49.21	879.42	Pull rope	Soft-Fiber Polyester
						UP206-5	2+1gnd #12,#12, 600 V, RHH/RHW insulation
5053	E-73A	53	Liquidtight Flex. Metal Cond.	227.46	879.42	UP206-9	1-2/C + gnd #8, 600 V, EPR insulation
						Pull rope	Soft-Fiber Polyester
5054	E-73A	53	Liquidtight Flex. Metal Cond.	562.30	649.22	Pull rope	Soft-Fiber Polyester
				4		LP221-6,8	1-3/C + gnd #6, 600 V, EPR insulation
						LP221-2,4	1-3/C + gnd #6, 600 V, EPR insulation
5055	E-73A	53	Liquidtight Flex. Metal Cond.	0.00	879.42	Pull rope	Soft-Fiber Polyester
5056	E-73A	53	Liquidtight Flex. Metal Cond.	0.00	879.42	Pull rope	Soft-Fiber Polyester
5076	E-74A	53	Liquidtight Flex. Metal Cond.	49.21	879.42	UP207-5	2 + 1 gnd #12,#12, 600 V, RHH/RHW insulation
						Pull rope	Soft-Fiber Polyester
5077	E-74A	53	Liquidtight Flex. Metal Cond.	0.00	879.42	Pull rope	Soft-Fiber Polyester
5079	E-74A	53	Liquidtight Flex. Metal Cond.	562.30	649.22	LP222-6,8	1-3/C + gnd #6, 600 V, EPR insulation
				4		Pull rope	Soft-Fiber Polyester
						LP222-2,4	1-3/C + gnd #6, 600 V, EPR insulation
5080	E-74A	53	Liquidtight Flex. Metal Cond.	0.00	879.42	Pull rope	Soft-Fiber Polyester
5081	E-74A	53	Liquidtight Flex. Metal Cond.	0.00	879.42	Pull rope	Soft-Fiber Polyester
5082	E-117	78	RGS-PVC coated conduit	150.44	1935.24	Pull rope	Soft-Fiber Polyester
						MVDSE03A	MVDS DLC

CONDUIT DATA

Conduit No	Reference	Size	Type	Total Fill (mm²)	Allowable Fill (mm²)	Included Cable No.	Conductor Type
5101	E-75A	53	Liquidtight Flex. Metal Cond.	481.89	879.42	UP208-5	2 + 1 gnd #12,#12, 600 V, RHH/RHW insulation
						UP208-11	1-3/C #12, 600 V, EPR insulation
						UP208-15	1-2/C + gnd #8, 600 V, EPR insulation
						UP208-9	1-2/C + gnd #12, 600 V, EPR insulation
						Pull rope	Soft-Fiber Polyester
5102	E-75A	53	Liquidtight Flex. Metal Cond.	0.00	879.42	Pull rope	Soft-Fiber Polyester
5104	E-75A	53	Liquidtight Flex. Metal Cond.	562.30	649.22	LP223-2,4	1-3/C + gnd #6, 600 V, EPR insulation
				4		LP223-6,8	1-3/C + gnd #6, 600 V, EPR insulation
						Pull rope	Soft-Fiber Polyester
5105	E-75A	53	Liquidtight Flex. Metal Cond.	476.76	1109.96	~~Pull rope~~	~~Soft-Fiber Polyester~~ 4
				4		2107-3	1-4/C + gnd #4, 600 V, EPR insulation
5106	E-75A	53	Liquidtight Flex. Metal Cond.	0.00	879.42	Pull rope	Soft-Fiber Polyester
5201	E-114	78	RGS conduit	562.30	1935.24	Pull rope	Soft-Fiber Polyester
				4		LP219-2,4	1-3/C + gnd #6, 600 V, EPR insulation
						LP219-6,8	1-3/C + gnd #6, 600 V, EPR insulation
5202	E-114	53	RGS conduit	0.00	1935.24	Pull rope	Soft-Fiber Polyester
5203	E-71A, E-114	53	RGS conduit	527.18	879.42	2095	1-3/C + gnd #2, 600 V, EPR insulation
						Pull rope	Soft-Fiber Polyester
5204	E-114	78	RGS conduit	0.00	1935.24	Pull rope	Soft-Fiber Polyester
5205	E-114	53	RGS conduit	527.18	879.42	Pull rope	Soft-Fiber Polyester
						2103	1-3/C + gnd #2, 600 V, EPR insulation
5206	E-114	78	RGS conduit	1201.71	1935.24	1474-4	50 pair #18, shielded pairs, IS/OS shield 600 V, XLPE insul., PVC jacket
5206A	E-71A	41	Liquidtight Flex. Metal Cond.		534.55	Pull rope	Soft-Fiber Polyester
5207	E-114	78	RGS conduit	1352.15	1935.24	MVDSE01A	MVDS DLC
						1474-5	50 pair #18, shielded pairs, IS/OS shield 600 V, XLPE insul., PVC jacket
5207A	E-71A	53	Liquidtight Flex. Metal Cond.		879.42	Pull rope	Soft-Fiber Polyester
5208	E-114	78	RGS conduit	30.19	1935.24	2475-3A	12 Fiber, single mode fiberoptic cable
						Pull rope	Soft-Fiber Polyester

For continuation, see next sheet.

CONDUIT AND TRAY SCHEDULE

E-439

REVISED BY	DATE REVISED
PBP	8/02
AB	8/02

CALCULATED/DESIGNED BY
CHECKED BY

DESIGN OVERSIGHT
BEHZAD GOLEMOHAMMADI

STATE OF CALIFORNIA - DEPARTMENT OF TRANSPORTATION
Caltrans

DATE PLOTTED => 15-APR-2011
TIME PLOTTED => 13:23

LAST REVISION 00-00-00

DIST	COUNTY	ROUTE	KILOMETER POST TOTAL PROJECT	SHEET No	TOTAL SHEETS
04	SF	80	13.2/13.9	395 R6	1204

Jens Erlingsson 12/19/02
REGISTERED ELECTRICAL ENGINEER DATE

12-6-04
PLANS APPROVAL DATE

REGISTERED PROFESSIONAL ENGINEER JENS ERLINGSSON No. 8249 Exp. 9/30/06 ELECTRICAL STATE OF CALIFORNIA

PB POWER, Inc.
A Parsons Brinckerhoff Company
303 Second St., Suite 700N
San Francisco, CA 94107-1317

The State of California or its officers or agents shall not be responsible for the accuracy or completeness of electronic copies of this plan sheet.

Caltrans now has a web site! To get to the web site, go to http://www.dot.ca.gov

Caltrans Metric

REQUEST FOR INFORMATION NOT ADDRESSED IN THIS CCO REMAIN IN FORCE

MARK	DATE	DESCRIPTIONS	BY	CH'D	CCO#
6	03/24/11	BIKE PATH CONDUIT	TW	RG	73
5	06/11/10	BIKE PATH CONDUIT	TW	RG	73
4	03/26/10	DEHUMIDIFIER SCADA INTERFACE	RR	RG FW	130
3	08/03/09	ELECTRICAL WARNING SYSTEMS	RY RR	RG FW	61
2	03/30/09	SERVICE PLATFORM ELECTRICAL CHANGES	RR RY	RG MP	55
1	03/04/08	BARRIER MODIFICATIONS	JS BM	RG SE	44

REVISIONS

CONTRACT CHANGE ORDER NO. 73
SHEET 39 OF 52

REGISTERED PROFESSIONAL ENGINEER S. A. ESTOQUE, JR. No. E-10151 Exp. 12/31/2009 ELECTRICAL STATE OF CALIFORNIA
FOR REVISION ONLY 1

REGISTERED PROFESSIONAL ENGINEER FADI WALIEDDINE No. 11465 Exp. 12/31/2011 ELECTRICAL STATE OF CALIFORNIA
FOR REVISION ONLY 2 3

REGISTERED PROFESSIONAL ENGINEER SYN YEE CHIN No. 18186 Exp. 09/30/2011 ELECTRICAL STATE OF CALIFORNIA
FOR REVISION ONLY 4 5 6

5 REVISIONS SUPERCEDED 6

CONDUIT DATA

Conduit No	Reference	Size	Type	Total Fill (mm²)	Allowable Fill (mm²)	Included Cable No.	Conductor Type
5210	E-114	78	RGS conduit	1323.45	1935.24	Pull rope	Soft-Fiber Polyester
						2119-2	4 pair #22, shielded pairs, 300 V, PE insulation
						1473-5	50 pair #18, shielded pairs, IS/OS shield 600 V, XLPE insul., PVC jacket
5210A	E-71A	41	Liquidtight Flex. Metal cond.		534.55	Pull rope	Soft-Fiber Polyester
5211	E-114	78	RGS conduit	0.00	1935.24	Pull rope	Soft-Fiber Polyester
5221	E-115	78	RGS conduit	187.79	1935.24	2202-2	1-3/C #14, 600 V, EPR insulation
						Pull rope	Soft-Fiber Polyester
						2202-3	1-7/C #16, 600 V, EPR insulation
5222	E-115	78	RGS conduit	830.76 6	1935.24	LP220-2,4	1-3/C + gnd #6, 600 V, EPR insulation
						LP220-6,8	1-3/C + gnd #6, 600 V, EPR insulation
						Pull rope	Soft-Fiber Polyester
						S-3056-6	1-4/C #14, 600 V, EPR insulation
						2204-2	1-3/C #14, 600 V, EPR insulation
						2204-1	1-3/C #14, 600 V, EPR insulation 6
5223	E-115	78	RGS conduit	1235.86	1935.24	UP205-1	1-2/C + gnd #10 ,600 V, EPR insulation
						Pull rope	Soft-Fiber Polyester
						UP206-1	1-2/C + gnd #10 ,600 V, EPR insulation
						UP205-8	1-2/C + gnd #8, 600 V, EPR insulation
						2096	1-3/C + gnd #2, 600 V, EPR insulation
						UP205-7	1-2/C + gnd #8, 600 V, EPR insulation
5224	E-115	78	RGS conduit	227.46	1935.24	Pull rope	Soft-Fiber Polyester
						UP205-6	1-2/C + gnd #8, 600 V, EPR insulation
5225	E-115	53	RGS conduit	527.18	879.42	Pull rope	Soft-Fiber Polyester
						2104	1-3/C + gnd #2, 600 V, EPR insulation
5226	E-115	78	RGS conduit	1558.08	1935.24	2120-1	1-2PR #18 Twisted Shielded w/overall Shield
						2121-1	1-2PR #18 Twisted Shielded w/overall Shield
						2910-11	1-3/C #16, 600 V, EPR insulation
						1474-5	50 pair #18, shielded pairs, IS/OS shield 600 V, XLPE insul., PVC jacket
						2155	1-2 pair, shielded #18 with IS/OA, 300V PVC jacket
						Pull rope	Soft-Fiber Polyester
5227	E-115	78	RGS conduit	1201.71	1935.24	Pull rope	Soft-Fiber Polyester
						1474-6	50 pair #18, shielded pairs, IS/OS shield 600 V, XLPE insul., PVC jacket
5228	E-115	78	RGS conduit	1445.19	1935.24	2910-10	4 pair #22, shielded pairs, 300 V, PE insulation
						Pull rope	Soft-Fiber Polyester
						1473-5	50 pair #18, shielded pairs, IS/OS shield 600 V, XLPE insul., PVC jacket
						2910-12	4 pair #22, shielded pairs, 300 V, PE insulation
5229	E-115	78	RGS conduit	317.80	1935.24	1474-5A	1 - 6 pair, shielded #18 with overall shield, 300 V, PVC jacket
						Pull rope	Soft-Fiber Polyester
						1474-5B	1 - 6 pair, shielded #18 with overall shield, 300 V, PVC jacket
5230	E-114	78	RGS conduit	0.00	1935.24	Pull rope	Soft-Fiber Polyester
5231	E-114	78	RGS conduit	0.00	1935.24	Pull rope	Soft-Fiber Polyester
5232	E-114	78	RGS conduit	1201.71	1935.24	1473-4	50 pair #18, shielded pairs, IS/OS shield 600 V, XLPE insul., PVC jacket
						Pull rope	Soft-Fiber Polyester
5233	E-115	78	RGS conduit	98.10	1935.24	Pull rope	Soft-Fiber Polyester
						2120-1	1-2PR #18 Twisted Shielded w/overall Shield
5234	E-115	78	RGS conduit	0.00	1935.24	Pull rope	Soft-Fiber Polyester
5235	E-115	78	RGS conduit	1201.71	1935.24	Pull rope	Soft-Fiber Polyester
						1473-6	50 pair #18, shielded pairs, IS/OS shield 600 V, XLPE insul., PVC jacket
5236	E-116	53	RGS conduit	0.00	1935.24	Pull rope	Soft-Fiber Polyester

THIS PLAN ACCURATE FOR ELECTRICAL WORK ONLY.

CONDUIT DATA

Conduit No	Reference	Size	Type	Total Fill (mm²)	Allowable Fill (mm²)	Included Cable No.	Conductor Type
5237	E-116	78	RGS conduit	0.00	1935.24	Pull rope	Soft-Fiber Polyester
5238	E-116	78	RGS conduit	1201.71	1935.24	1473-6	50 pair #18, shielded pairs, IS/OS shield 600 V, XLPE insul., PVC jacket
						Pull rope	Soft-Fiber Polyester
5241	E-116	78	RGS conduit	942.43	1935.24	2202-3	1-7/C #16, 600 V, EPR insulation
						2202-2	1-3/C #14, 600 V, EPR insulation
						2105	1-3/C + gnd #2, 600 V, EPR insulation
						2202-1	1-2/C + gnd #8, 600 V, EPR insulation
						Pull rope	Soft-Fiber Polyester
5242	E-116	53	RGS conduit	192.40	1935.24	Pull rope	Soft-Fiber Polyester
						CCTVE01AB	TVCP
						CCTVE01AA	TVP
5243	E-116	53	RGS conduit	527.18	879.42	Pull rope	Soft-Fiber Polyester
						2097	1-3/C + gnd #2, 600 V, EPR insulation
5244	E-116	78	RGS conduit	648.58	1935.24	Pull rope	Soft-Fiber Polyester
						LP221-2,4	1-3/C + gnd #6, 600 V, EPR insulation
						LP221-6,8	1-3/C + gnd #6, 600 V, EPR insulation
5245	E-116	78	RGS conduit	642.71	1935.24	2202-1	1-2/C + gnd #8, 600 V, EPR insulation
						2202-2	1-3/C #14, 600 V, EPR insulation
						UP206-9	1-2/C + gnd #8, 600 V, EPR insulation
						2204-3	1-7/C #16, 600 V, EPR insulation
						Pull rope	Soft-Fiber Polyester
5246	E-116	78	RGS conduit	1201.71	1935.24	1474-6	50 pair #18, shielded pairs, IS/OS shield 600 V, XLPE insul., PVC jacket
						Pull rope	Soft-Fiber Polyester
5247	E-116	78	RGS conduit	1525.97	1935.24	Pull rope	Soft-Fiber Polyester
						MVDSE02A	MVDS DLC
						CCTVE01AD	TVL
						CCTVE01AC	TVC
						1474-7	50 pair #18, shielded pairs, IS/OS shield 600 V, XLPE insul., PVC jacket
5249	E-116	78	RGS-PVC coated conduit	30.19	1935.24	2475-3B	12 Fiber, single mode fiberoptic cable
						Pull rope	Soft-Fiber Polyester
5250	E-116	78	RGS conduit	1201.71	1935.24	1473-7	50 pair #18, shielded pairs, IS/OS shield 600 V, XLPE insul., PVC jacket
						Pull rope	Soft-Fiber Polyester

For continuation, see next sheet.

CONDUIT AND TRAY SCHEDULE

E-440

STATE OF CALIFORNIA - DEPARTMENT OF TRANSPORTATION
Caltrans

DESIGN OVERSIGHT
BEHZAD GOLEMOHAMMADI

CALCULATED/DESIGNED BY PBP
CHECKED BY AB
DATE 8/02 8/02
REVISED BY DATE REVISED

LAST REVISION 00-00-00
DATE PLOTTED => 15-APR-2011
TIME PLOTTED => 13:23

FOR REDUCED PLANS ORIGINAL SCALE IS IN MILLIMETERS 0 20 40 60 80

DGN FILE =>04-0120f1_0395R06.dgn
USERNAME =>llorico

CU 04251 EA 0120F1

DIST	COUNTY	ROUTE	KILOMETER POST TOTAL PROJECT	SHEET No	TOTAL SHEETS
04	SF	80	13.2/13.9	396 R5	1204

REGISTERED ELECTRICAL ENGINEER 12/19/02 DATE

12-6-04
PLANS APPROVAL DATE

REGISTERED PROFESSIONAL ENGINEER JENS ERLINGSSON No. 8249 Exp. 9/30/06 ELECTRICAL STATE OF CALIFORNIA

PB POWER, Inc.
A Parsons Brinckerhoff Company
303 Second St., Suite 700N
San Francisco, CA 94107-1317

The State of California or its officers or agents shall not be responsible for the accuracy or completeness of electronic copies of this plan sheet.

Caltrans now has a web site! To get to the web site, go to http://www.dot.ca.gov

Caltrans Metric

REQUEST FOR INFORMATION NOT ADDRESSED IN THIS CCO REMAIN IN FORCE

MARK	DATE	DESCRIPTIONS	BY	CH'D	CCO#
5	03/24/11	BIKE PATH CONDUIT	TW	RG	73
4	06/11/10	BIKE PATH CONDUIT	TW	RG	73
3	03/30/09	SERVICE PLATFORM ELECTRICAL CHANGES	RR RY	RG MP	55
2	03/04/08	BARRIER MODIFICATIONS	JS BM	RG SE	44
1	02/19/08	ELECTRICAL MODIFICATIONS	MP EL	RR	42

REVISIONS

CONTRACT CHANGE ORDER NO. 73
SHEET 40 OF 52

REGISTERED PROFESSIONAL ENGINEER MARRELL FUNTO TAKAKI No. E 8651 Exp. 9/30/2008 ELECTRICAL STATE OF CALIFORNIA
FOR REVISION ONLY 1

REGISTERED PROFESSIONAL ENGINEER S. A. ESTOQUE, JR. No. E-10151 Exp. 12/31/2008 ELECTRICAL STATE OF CALIFORNIA
FOR REVISION ONLY 2

REGISTERED PROFESSIONAL ENGINEER FADI WALIEDDINE No. 11465 Exp. 12/31/2009 ELECTRICAL STATE OF CALIFORNIA
FOR REVISION ONLY 3

REGISTERED PROFESSIONAL ENGINEER SYN YEE CHIN No. 18186 Exp. 09/30/2011 ELECTRICAL STATE OF CALIFORNIA
FOR REVISION ONLY 4 5

4 REVISIONS SUPERCEDED 5

CONDUIT DATA

Conduit No	Reference	Size	Type	Total Fill (mm²)	Allowable Fill (mm²)	Included Cable No.	Conductor Type
5251	E-116	78	RGS conduit	0.00	1935.24	Pull rope	Soft-Fiber Polyester
5261	E-117	78	RGS conduit	648.58	1935.24	LP222-2,4	1-3/C + gnd #6, 600 V, EPR insulation
						Pull rope	Soft-Fiber Polyester
						LP222-6,8	1-3/C + gnd #6, 600 V, EPR insulation
5262	E-117	78	RGS conduit	0.00	1935.24	Pull rope	Soft-Fiber Polyester
5263	E-117	53	RGS conduit	527.18	879.42	2098	1-3/C + gnd #2, 600 V, EPR insulation
						Pull rope	Soft-Fiber Polyester
5264	E-117	78	RGS conduit	0.00	1935.24	Pull rope	Soft-Fiber Polyester
5265	E-117	53	RGS conduit	527.18	879.42	Pull rope	Soft-Fiber Polyester
						2106	1-3/C + gnd #2, 600 V, EPR insulation
5266	E-117	78	RGS conduit	0.00		Pull rope	Soft-Fiber Polyester
5267	E-117	78	RGS conduit	1201.71	1935.24	Pull rope	Soft-Fiber Polyester
						1474-8	50 pair #18, shielded pairs, IS/OS shield 600 V, XLPE insul., PVC jacket
5269	E-117	78	RGS-PVC coated conduit	30.19	1935.24	2475-3C	12 fiber, single mode fiberoptic cable
						Pull rope	Soft-Fiber Polyester
5270	E-117	78	RGS conduit	1201.71	1935.24	Pull rope	Soft-Fiber Polyester
						1473-7	50 pair #18, shielded pairs, IS/OS shield 600 V, XLPE insul., PVC jacket
5271	E-117	78	RGS conduit	1201.71	1935.24	Pull rope	Soft-Fiber Polyester
						1474-7	50 pair #18, shielded pairs, IS/OS shield 600 V, XLPE insul., PVC jacket
5272	E-117	78	RGS conduit	1201.71	1935.24	1473-8	50 pair #18, shielded pairs, IS/OS shield 600 V, XLPE insul., PVC jacket
						Pull rope	Soft-Fiber Polyester
5273	E-117	53	RGS conduit	0.00	1935.24	Pull rope	Soft-Fiber Polyester
5274	E-117	78	RGS conduit	150.44	1935.24	MVDSE03A	MVDS DLC
						Pull rope	Soft-Fiber Polyester
5275	E-118	78	RGS conduit	1201.71	1935.24	2474-10	50 pair #18, shielded pairs, IS/OS shield 600 V, XLPE insul., PVC jacket
						Pull rope	Soft-Fiber Polyester
5276	E-118	78	RGS conduit	0.00	1935.24	Pull rope	Soft-Fiber Polyester
5277	E-118	78	RGS conduit	1201.71	1935.24	1473-8	50 pair #18, shielded pairs, IS/OS shield 600 V, XLPE insul., PVC jacket
						Pull rope	Soft-Fiber Polyester
5281	E-118	78	RGS conduit	307.37	1935.24	2210-5	1-3/C #14, 600 V, EPR insulation
						Pull rope	Soft-Fiber Polyester
						2201-3	1-3/C #14, 600 V, EPR insulation
						2201-4	1-9/C #16, 600 V, EPR insulation
5282	E-118	78	RGS conduit	660.40	1935.24	S-3056-9	1-4/C #14, 600 V, EPR insulation
				5		~~Pull rope~~	~~Soft-Fiber Polyester~~ 5
						LP223-2,4	1-2/C + gnd #6, 600 V, EPR insulation
						LP223-6,8	1-2/C + gnd #6, 600 V, EPR insulation
5283	E-118	78	RGS conduit	1153.19	1935.24	UP208-8	1-2/C + gnd #8, 600 V, EPR insulation
		5		5		Pull rope	Soft-Fiber Polyester
						~~2099~~	~~1-3/C + gnd #2, 600 V, EPR insulation~~ 5
						UP208-1	1-2/C + gnd #8, 600 V, EPR insulation
						UP208-7	1-2/C + gnd #8, 600 V, EPR insulation
5284	E-118	53	RGS conduit	626.01	879.42	UP208-2	1-2/C + gnd #8, 600 V, EPR insulation
				5		Pull rope	Soft-Fiber Polyester
						UP208-4	1-2/C + gnd #8, 600 V, EPR insulation
						UP208-6	1-2/C + gnd #8, 600 V, EPR insulation
5285	E-118	78	RGS conduit	527.18	1935.24	2107	1-3/C + gnd #2, 600 V, EPR insulation
						Pull rope	Soft-Fiber Polyester

CONDUIT DATA

Conduit No	Reference	Size	Type	Total Fill (mm²)	Allowable Fill (mm²)	Included Cable No.	Conductor Type
5286	E-118	78	RGS conduit	1299.81	1935.24	2154	1 - 2 pair, shielded #18 with IS/OA, 300 V, PVC jacket
						1474-10	50 pair #18, shielded pairs, IS/OS shield 600 V, XLPE insul., PVC jacket
						Pull rope	Soft-Fiber Polyester
5287	E-118	53	RGS conduit	0.00	1935.24	Pull rope	Soft-Fiber Polyester
5289	E-118	78	RGS conduit	1201.71	1935.24	Pull rope	Soft-Fiber Polyester
						1473-10	50 pair #18, shielded pairs, IS/OS shield 600 V, XLPE insul., PVC jacket
5290	E-118	78	RGS conduit	1519.51	1935.24	1474-8A	1 - 6 pair, shielded #18 with overall shield, 300 V, PVC jacket
						1474-8B	1 - 6 pair, shielded #18 with overall shield, 300 V, PVC jacket
						1474-8	50 pair #18, shielded pairs, IS/OS shield 600 V, XLPE insul., PVC jacket
						Pull rope	Soft-Fiber Polyester
5299	E-182	41	RGS conduit	425.70	534.55	A-3032-2	3 + 1 gnd #6,#8, 600 V, RHH/RHW insulation
						A-3033-2	3 + 1 gnd #6,#8, 600 V, RHH/RHW insulation
						Pull rope	Soft-Fiber Polyester
5301	E-181	41	RGS conduit	0.00	534.55	Pull rope	Soft-Fiber Polyester
5302	E-181	41	RGS conduit	0.00	534.55	Pull rope	Soft-Fiber Polyester
5303	E-181	53	RGS conduit	648.58	879.42	A-3040-3	1-3/C + gnd #6, 600 V, EPR insulation
						Pull rope	Soft-Fiber Polyester
						A-3039-3	1-3/C + gnd #6, 600 V, EPR insulation
5304	E-181	53	RGS conduit	0.00	879.42	Pull rope	Soft-Fiber Polyester
5305	E-181	41	RGS conduit	212.85	534.55	Pull rope 5	Soft-Fiber Polyester
				5		LP219-2A,4A	3 + 1 gnd #6,#8, 600 V, RHH/RHW insulation 5
5306	E-181	41	RGS conduit	212.85	534.55		
						Pull rope	Soft-Fiber Polyester
						LP219-6A,8A	3 + 1 gnd #6,#8, 600 V, RHH/RHW insulation
					5		
5307	E-181	53	RGS conduit	281.15	1165.23	LP219-2,4	1-3/C + gnd #6, 600 V, EPR insulation
						Pull rope	Soft-Fiber Polyester
5308	E-181	53	RGS conduit	281.15	1165.23		
						Pull rope	Soft-Fiber Polyester
						LP219-6,8	1-3/C + gnd #6, 600 V, EPR insulation
5309	E-181	53	RGS conduit	98.10	879.42	Pull rope	Soft-Fiber Polyester
						2155	1 - 2 pair, shielded #18 with IS/OA, 300 V, PVC jacket
5310	E-181	53	RGS conduit	0.00	879.42	Pull rope	Soft-Fiber Polyester
5311	E-181	41	RGS conduit	126.88	534.55	S-2031-2	3 + 1 gnd #6,#8, 600 V, RHH/RHW insulation
						Pull rope	Soft-Fiber Polyester
						UP204-1	1-2/C + gnd #10, 600 V, EPR insulation

For continuation, see next sheet.

CONDUIT AND TRAY SCHEDULE

E-441

THIS PLAN ACCURATE FOR ELECTRICAL WORK ONLY.

STATE OF CALIFORNIA - DEPARTMENT OF TRANSPORTATION
Caltrans

DESIGN OVERSIGHT
BEHZAD GOLEMOHAMMADI

CALCULATED/DESIGNED BY PBP
CHECKED BY AB
DATE 8/02 8/02
REVISED BY
DATE REVISED

LAST REVISION 00-00-00
DATE PLOTTED => 15-APR-2011
TIME PLOTTED => 13:23

FOR REDUCED PLANS ORIGINAL SCALE IS IN MILLIMETERS 0 20 40 60 80

DGN FILE =>04-0120f1_0396R05.dgn
USERNAME =>llorico

CU 04251 EA 0120F1

DIST	COUNTY	ROUTE	KILOMETER POST TOTAL PROJECT	SHEET No	TOTAL SHEETS
04	SF	80	13.2/13.9	397 R4	1204

REGISTERED ELECTRICAL ENGINEER 12/19/02 DATE

12-6-04
PLANS APPROVAL DATE

REGISTERED PROFESSIONAL ENGINEER JENS ERLINGSSON No. 8249 Exp. 9/30/06 ELECTRICAL STATE OF CALIFORNIA

PB POWER, Inc.
A Parsons Brinckerhoff Company
303 Second St., Suite 700N
San Francisco, CA 94107-1317

The State of California or its officers or agents shall not be responsible for the accuracy or completeness of electronic copies of this plan sheet.

Caltrans now has a web site! To get to the web site, go to http://www.dot.ca.gov

Caltrans Metric

REQUEST FOR INFORMATION NOT ADDRESSED IN THIS CCO REMAIN IN FORCE

MARK	DATE	DESCRIPTIONS	BY	CH'D	CCO#
4	03/24/11	BIKE PATH CONDUIT	TW	RG	73
3	06/11/10	BIKE PATH CONDUIT	TW	RG	73
2	03/04/08	BARRIER MODIFICATIONS	JS BM	RG SE	44
1	02/19/08	ELECTRICAL MODIFICATIONS	MP EL	RR	42

REVISIONS

CONTRACT CHANGE ORDER NO. 73
SHEET 41 OF 52

REGISTERED PROFESSIONAL ENGINEER MASAELI FUMIO TAKAKI No. E 8651 Exp. 9/30/2008 ELECTRICAL STATE OF CALIFORNIA
FOR REVISION ONLY 1

REGISTERED PROFESSIONAL ENGINEER S. A. ESTOQUE, JR. No. E-10151 Exp. 12/31/2008 ELECTRICAL STATE OF CALIFORNIA
FOR REVISION ONLY 2

REGISTERED PROFESSIONAL ENGINEER SYN YEE CHIN No. 18186 Exp. 09/30/2011 ELECTRICAL STATE OF CALIFORNIA
FOR REVISION ONLY 3 4

3 REVISIONS SUPERCEDED 4

CONDUIT DATA

Conduit No	Reference	Size	Type	Total Fill (mm²)	Allowable Fill (mm²)	Included Cable No.	Conductor Type
5312	E-181	41	RGS conduit	0.00	534.55	A-2035-2	3 + 1 gnd #6,#8, 600 V, RHH/RHW insulation
						Pull rope 4	Soft-Fiber Polyester
5313	E-181	78	RGS conduit	654.06	1935.24	S-2031-4	1-3/C + gnd #4, 600 V, EPR insulation
						UP204-1	1-2/C + gnd #10, 600 V, EPR insulation
						S-2031-1	1-3/C + gnd #2, 600 V, EPR insulation
						Pull rope	Soft-Fiber Polyester
5314	E-181	53	RGS conduit	648.58	879.42	A-2035-1 4	1-3/C + gnd #6, 600 V, EPR insulation
						A-2035-4	1-3/C + gnd #6, 600 V, EPR insulation
						Pull rope	Soft-Fiber Polyester
5315	E-181	53	RGS conduit	0.00	879.42	Pull rope	Soft-Fiber Polyester
5316	E-181	53	RGS conduit	0.00	879.42	Pull rope	Soft-Fiber Polyester
5317	E-181	78	RGS conduit	527.18	1935.24	A-2011-1	1-3/C + gnd #2, 600 V, EPR insulation
						Pull rope	Soft-Fiber Polyester
5320	E-185	78	RGS conduit	0.00	1935.24	Pull rope	Soft-Fiber Polyester
5321	E-181	41	RGS conduit	0.00	534.55	Pull rope	Soft-Fiber Polyester
5322	E-181	41	RGS conduit	0.00	534.55	Pull rope	Soft-Fiber Polyester
5323	E-181	53	RGS conduit	0.00	879.42	Pull rope	Soft-Fiber Polyester
5324	E-181	53	RGS conduit	0.00	879.42	Pull rope	Soft-Fiber Polyester
5325	E-181	53	RGS conduit	0.00	879.42	Pull rope	Soft-Fiber Polyester
5326	E-181	53	RGS conduit	0.00	879.42	Pull rope	Soft-Fiber Polyester
5333	E-182	41	RGS conduit	212.85	534.55	Pull rope	Soft-Fiber Polyester
						LP220-2A,4A 4	3 + 1 gnd #6,#8, 600 V, RHH/RHW insulation
5334	E-182	41	RGS conduit	0.00	534.55	Pull rope	Soft-Fiber Polyester
5335	E-182	53	RGS conduit	324.29	879.42	Pull rope	Soft-Fiber Polyester
						LP220-2,4	1-3/C + gnd #6, 600 V, EPR insulation
5336	E-182	53	RGS conduit	0.00	879.42	Pull rope	Soft-Fiber Polyester
5337	E-182	53	RGS conduit	0.00	879.42	Pull rope	Soft-Fiber Polyester
5338	E-182	53	RGS conduit	0.00	879.42	Pull rope	Soft-Fiber Polyester
5346	E-185	53	RGS conduit	366.10	879.42	Pull rope	Soft-Fiber Polyester
						A-3031-1	1-3/C + gnd #4, 600 V, EPR insulation
5347	E-185	53	RGS conduit	0.00	879.42	Pull rope	Soft-Fiber Polyester
5348	E-181	41	RGS conduit	212.85	534.55	Pull rope	Soft-Fiber Polyester
						A-3031-2	3 + 1 gnd #6,#8, 600 V, RHH/RHW insulation
5349	E-181	41	RGS conduit	212.85	534.55	Pull rope	Soft-Fiber Polyester
						A-2011-2	3 + 1 gnd #6,#8, 600 V, RHH/RHW insulation
5350	E-185	53	RGS conduit	0.00	879.42	Pull rope	Soft-Fiber Polyester
5351	E-182	41	RGS conduit	0.00	534.55	Pull rope	Soft-Fiber Polyester
5352	E-182	41	RGS conduit	212.85	534.55	Pull rope 4	Soft-Fiber Polyester
						LP220-6A,8A	3 + 1 gnd #6,#8, 600 V, RHH/RHW insulation
5353	E-182	53	RGS conduit	0.00	879.42	Pull rope	Soft-Fiber Polyester
5354	E-182	53	RGS conduit	324.29	879.42	Pull rope	Soft-Fiber Polyester
						LP220-6,8	1-3/C + gnd #6, 600 V, EPR insulation
5355	E-182	53	RGS conduit	0.00	879.42	Pull rope	Soft-Fiber Polyester
5356	E-182	53	RGS conduit	0.00	879.42	Pull rope	Soft-Fiber Polyester
5357	E-182	41	RGS conduit	212.85	534.55	A-3039-2	3 + 1 gnd #6,#8, 600 V, RHH/RHW insulation
						Pull rope	Soft-Fiber Polyester
5358	E-182	41	RGS conduit	0.00	534.55	Pull rope	Soft-Fiber Polyester
5359	E-182	53	RGS conduit	851.47	879.42	A-3039-3	1-3/C + gnd #6, 600 V, EPR insulation
						A-3039-1	1-3/C + gnd #2, 600 V, EPR insulation
						Pull rope	Soft-Fiber Polyester
5360	E-182	53	RGS conduit	648.58	879.42	Pull rope	Soft-Fiber Polyester

CONDUIT DATA

Conduit No	Reference	Size	Type	Total Fill (mm²)	Allowable Fill (mm²)	Included Cable No.	Conductor Type
						A-3039-3	1-3/C + gnd #6, 600 V, EPR insulation
						A-3040-3	1-3/C + gnd #6, 600 V, EPR insulation
5363	E-182	41	RGS conduit	212.85	534.55	A-2012-2	3 + 1 gnd #6, #8, 600 V, RHH/RHW insulation
						Pull rope	Soft-Fiber Polyester
5364	E-182	41	RGS conduit	0.00	534.55	Pull rope	Soft-Fiber Polyester
5365	E-182	53	RGS conduit	0.00	879.42	Pull rope	Soft-Fiber Polyester
5366	E-182	53	RGS conduit	527.18	879.42	A-2012-1	1-3/C + gnd #2, 600 V, EPR insulation
						Pull rope	Soft-Fiber Polyester
5367	E-182	53	RGS conduit	0.00	879.42	Pull rope	Soft-Fiber Polyester
5368	E-182	53	RGS conduit	0.00	879.42	Pull rope	Soft-Fiber Polyester
5369	E-182	53	RGS conduit	0.00	879.42	Pull rope	Soft-Fiber Polyester
5370	E-182	53	RGS conduit	0.00	879.42	Pull rope	Soft-Fiber Polyester
5371	E-182	53	RGS conduit	0.00	879.42	Pull rope	Soft-Fiber Polyester
5372	E-182	53	RGS conduit	0.00	879.42	Pull rope	Soft-Fiber Polyester
5373	E-182	53	RGS conduit	0.00	879.42	Pull rope	Soft-Fiber Polyester
5374	E-182	53	RGS conduit	0.00	879.42	Pull rope	Soft-Fiber Polyester
5375	E-182	53	RGS conduit	0.00	879.42	Pull rope	Soft-Fiber Polyester
5378	E-185	78	RGS conduit	0.00	1935.24	Pull rope	Soft-Fiber Polyester
5379	E-185	78	RGS conduit	0.00	1935.24	Pull rope	Soft-Fiber Polyester
5380	E-182	53	RGS conduit	0.00	879.42	Pull rope	Soft-Fiber Polyester
5381	E-182	41	RGS conduit	0.00	534.55	Pull rope	Soft-Fiber Polyester
5382	E-182	41	RGS conduit	0.00	534.55	Pull rope	Soft-Fiber Polyester
5383	E-182	78	RGS conduit	0.00	1935.24	Pull rope	Soft-Fiber Polyester
5384	E-182	53	RGS conduit	0.00	879.42	Pull rope	Soft-Fiber Polyester
5385	E-182	53	RGS conduit	0.00	879.42	Pull rope	Soft-Fiber Polyester
5386	E-182	53	RGS conduit	0.00	879.42	Pull rope	Soft-Fiber Polyester
5387	E-182	41	RGS conduit	212.85	534.55	A-3040-2	3 + 1 gnd #6,#8, 600 V, RHH/RHW insulation
						Pull rope	Soft-Fiber Polyester

For continuation, see next sheet.

CONDUIT AND TRAY SCHEDULE

E-442

DATE	BY	REVISED BY	DATE REVISED
8/02	AB		

CALCULATED/DESIGNED BY: PBP
CHECKED BY: AB

DESIGN OVERSIGHT: BEHZAD GOLEMOHAMMADI

STATE OF CALIFORNIA - DEPARTMENT OF TRANSPORTATION
Caltrans

LAST REVISION 00-00-00
DATE PLOTTED => 15-APR-2011
TIME PLOTTED => 13:23

FOR REDUCED PLANS ORIGINAL SCALE IS IN MILLIMETERS 0 20 40 60 80

DGN FILE =>04-0120f1_0397R04.dgn
USERNAME =>llorico

CU 04251 | EA 0120F1

DIST	COUNTY	ROUTE	KILOMETER POST TOTAL PROJECT	SHEET No	TOTAL SHEETS
04	SF	80	13.2/13.9	398 R3	1204

REGISTERED ELECTRICAL ENGINEER 12/19/02 DATE

12-6-04
PLANS APPROVAL DATE

REGISTERED PROFESSIONAL ENGINEER JENS ERLINGSSON No. 8249 Exp. 9/30/06 ELECTRICAL STATE OF CALIFORNIA

PB POWER, Inc.
A Parsons Brinckerhoff Company
303 Second St., Suite 700N
San Francisco, CA 94107-1317

The State of California or its officers or agents shall not be responsible for the accuracy or completeness of electronic copies of this plan sheet.

Caltrans now has a web site! To get to the web site, go to http://www.dot.ca.gov

Caltrans Metric

REQUEST FOR INFORMATION NOT ADDRESSED IN THIS CCO REMAIN IN FORCE

MARK	DATE	DESCRIPTIONS	BY	CH'D	CCO#
3	03/24/11	BIKE PATH CONDUIT	TW	RG	73
2	06/11/10	BIKE PATH CONDUIT	TW	RG	73
1	03/04/08	BARRIER MODIFICATIONS	TW	RG	44

REVISIONS

CONTRACT CHANGE ORDER NO. 73
SHEET 42 OF 52

FOR REVISION ONLY 1

REGISTERED PROFESSIONAL ENGINEER S. A. ESTOQUE, JR. No. E-10151 Exp. 12/31/2008 ELECTRICAL STATE OF CALIFORNIA

REGISTERED PROFESSIONAL ENGINEER SYN YEE CHIN No. 18185 Exp. 09/30/2011 ELECTRICAL STATE OF CALIFORNIA

FOR REVISION ONLY 2 3

2 REVISIONS SUPERCEDED 3

CONDUIT DATA

Conduit No	Reference	Size	Type	Total Fill (mm²)	Allowable Fill (mm²)	Included Cable No.	Conductor Type
5388	E-182	41	RGS conduit	0.00	534.55	Pull rope	Soft-Fiber Polyester
5389	E-182	53	RGS conduit	851.47	879.42	A-3040-3	1-3/C + gnd #6, 600 V, EPR Insulation
						Pull rope	Soft-Fiber Polyester
						A-3040-1	1-3/C + gnd #2, 600 V, EPR Insulation
5390	E-182	53	RGS conduit	0.00	879.42	Pull rope	Soft-Fiber Polyester
5391	E-182	53	RGS conduit	0.00	879.42	Pull rope	Soft-Fiber Polyester
5392	E-182	53	RGS conduit	0.00	879.42	Pull rope	Soft-Fiber Polyester
5393	E-183	41	RGS conduit	440.31	534.55	A-3034-2	3 + 1 gnd #6,#8, 600 V, RHH/RHW Insulation
						Pull rope	Soft-Fiber Polyester
						UP106-1	1-2/C + gnd #8, 600 V, EPR Insulation
5394	E-183	41	RGS conduit	425.70	534.55	Pull rope 3	Soft-Fiber Polyester
						LP221-2A,4A	3 + 1 gnd #6,#8, 600 V, RHH/RHW Insulation
						LP221-6A,8A	3 + 1 gnd #6,#8, 600 V, RHH/RHW Insulation
5395	E-183	78	RGS conduit	527.18	1935.24	Pull rope	Soft-Fiber Polyester
						A-3034-1	1-3/C + gnd #2, 600 V, EPR Insulation
5396	E-183	53	RGS conduit	562.30	681.55	Pull rope	Soft-Fiber Polyester
				3		LP221-2,4	1-3/C + gnd #6 ,600 V, EPR Insulation
						LP221-6,8	1-3/C + gnd #6 ,600 V, EPR Insulation
5397	E-183	53	RGS conduit	0.00	879.42	Pull rope	Soft-Fiber Polyester
5398	E-183	53	RGS conduit	0.00	879.42	Pull rope	Soft-Fiber Polyester
5399	E-183	41	RGS conduit	0.00	534.55	Pull rope	Soft-Fiber Polyester
5400	E-183	41	RGS conduit	0.00	534.55	Pull rope	Soft-Fiber Polyester
5401	E-183	53	RGS conduit	0.00	879.42	Pull rope	Soft-Fiber Polyester
5402	E-183	53	RGS conduit	0.00	879.42	Pull rope	Soft-Fiber Polyester
5403	E-183	53	RGS conduit	0.00	879.42	Pull rope	Soft-Fiber Polyester
5404	E-183	53	RGS conduit	0.00	879.42	Pull rope	Soft-Fiber Polyester
5405	E-183	53	RGS conduit	0.00	879.42	Pull rope	Soft-Fiber Polyester
5406	E-183	53	RGS conduit	0.00	879.42	Pull rope	Soft-Fiber Polyester
5411	E-183	41	RGS conduit	0.00	534.55	Pull rope	Soft-Fiber Polyester
5412	E-183	41	RGS conduit	0.00	534.55	Pull rope	Soft-Fiber Polyester
5413	E-183	53	RGS conduit	0.00	879.42	Pull rope	Soft-Fiber Polyester
5414	E-183	53	RGS conduit	0.00	879.42	Pull rope	Soft-Fiber Polyester
5415	E-183	53	RGS conduit	0.00	879.42	Pull rope	Soft-Fiber Polyester
5416	E-183	53	RGS conduit	0.00	879.42	Pull rope	Soft-Fiber Polyester
5417	E-183	41	RGS conduit	0.00	534.55	Pull rope	Soft-Fiber Polyester
5418	E-183	41	RGS conduit	0.00	534.55	Pull rope	Soft-Fiber Polyester
5419	E-183	53	RGS conduit	0.00	879.42	Pull rope	Soft-Fiber Polyester
5420	E-183	53	RGS conduit	0.00	879.42	Pull rope	Soft-Fiber Polyester
5421	E-183	53	RGS conduit	0.00	879.42	Pull rope	Soft-Fiber Polyester
5422	E-183	53	RGS conduit	0.00	879.42	Pull rope	Soft-Fiber Polyester
5423	E-183	41	RGS conduit	212.85	534.55	Pull rope	Soft-Fiber Polyester
						A-3035-2	3 + 1 gnd #6,#8, 600 V, RHH/RHW Insulation
5424	E-183	41	RGS conduit	0.00	534.55	Pull rope	Soft-Fiber Polyester
5425	E-183	78	RGS conduit	366.10	1935.24	A-3035-1	1-3/C + gnd #4 600 V, EPR insulation
						Pull rope	Soft-Fiber Polyester

CONDUIT DATA

Conduit No	Reference	Size	Type	Total Fill (mm²)	Allowable Fill (mm²)	Included Cable No.	Conductor Type
5426	E-183	53	RGS conduit	0.00	879.42	Pull rope	Soft-Fiber Polyester
5427	E-183	53	RGS conduit	0.00	879.42	Pull rope	Soft-Fiber Polyester
5428	E-183	53	RGS conduit	0.00	879.42	Pull rope	Soft-Fiber Polyester
5429	E-183	41	RGS conduit	0.00	534.55	Pull rope	Soft-Fiber Polyester
5430	E-183	41	RGS conduit	0.00	534.55	Pull rope	Soft-Fiber Polyester
5431	E-183	53	RGS conduit	0.00	879.42	Pull rope	Soft-Fiber Polyester
5432	E-183	53	RGS conduit	0.00	879.42	Pull rope	Soft-Fiber Polyester
5433	E-183	53	RGS conduit	0.00	879.42	Pull rope	Soft-Fiber Polyester
5434	E-183	53	RGS conduit	0.00	879.42	Pull rope	Soft-Fiber Polyester
5436	E-183	53	RGS conduit	0.00	879.42	Pull rope	Soft-Fiber Polyester
5437	E-185	53	RGS conduit	0.00	879.42	Pull rope	Soft-Fiber Polyester
5441	E-183	41	RGS conduit	0.00	534.55	Pull rope	Soft-Fiber Polyester
5442	E-183	41	RGS conduit	0.00	534.55	Pull rope	Soft-Fiber Polyester
5443	E-183	53	RGS conduit	0.00	879.42	Pull rope	Soft-Fiber Polyester
5444	E-183	53	RGS conduit	0.00	879.42	Pull rope	Soft-Fiber Polyester
5445	E-184	53	RGS conduit	0.00	879.42	Pull rope	Soft-Fiber Polyester
5446	E-184	53	RGS conduit	0.00	879.42	Pull rope	Soft-Fiber Polyester
5447	E-183	41	RGS conduit	0.00	534.55	Pull rope	Soft-Fiber Polyester
5448	E-183	41	RGS conduit	0.00	534.55	Pull rope	Soft-Fiber Polyester
5449	E-183	53	RGS conduit	0.00	879.42	Pull rope	Soft-Fiber Polyester
5450	E-183	53	RGS conduit	0.00	879.42	Pull rope	Soft-Fiber Polyester
5451	E-184	53	RGS conduit	527.18	879.42	A-2013-1	1-3/C + gnd #2, 600 V, EPR Insulation
						Pull rope	Soft-Fiber Polyester
5452	E-184	53	RGS conduit	212.85	879.42	Pull rope	Soft-Fiber Polyester
						A-2013-2	3 + 1 gnd #6,#8, 600 V, RHH/RHW Insulation
5453	E-184	53	RGS conduit	454.92	879.42	Pull rope	Soft-Fiber Polyester
						UP208-4	1-2/C + gnd #8, 600 V, EPR Insulation
						UP208-6	1-2/C + gnd #8, 600 V, EPR Insulation
5454	E-184	53	RGS conduit	212.85	879.42	A-3036-2	3 + 1 gnd #6,#8, 600 V, RHH/RHW Insulation
						Pull rope	Soft-Fiber Polyester
5455	E-184	53	RGS conduit	454.92	879.42	UP208-4	1-2/C + gnd #8, 600 V, EPR Insulation
						Pull rope	Soft-Fiber Polyester
						UP208-6	1-2/C + gnd #8, 600 V, EPR Insulation

For continuation, see next sheet.

CONDUIT AND TRAY SCHEDULE

E-443

STATE OF CALIFORNIA - DEPARTMENT OF TRANSPORTATION
Caltrans

DESIGN OVERSIGHT
BEHZAD GOLEMOHAMMADI

CALCULATED/DESIGNED BY PBP
CHECKED BY AB
DATE 8/02 8/02
REVISED BY DATE REVISED

LAST REVISION 00-00-00
DATE PLOTTED => 15-APR-2011
TIME PLOTTED => 13:23

FOR REDUCED PLANS ORIGINAL SCALE IS IN MILLIMETERS 0 20 40 60 80

DGN FILE =>04-0120f1_0398R03.dgn
USERNAME =>llorico

CU 04251 EA 0120F1

DIST	COUNTY	ROUTE	KILOMETER POST TOTAL PROJECT	SHEET No	TOTAL SHEETS
04	SF	80	13.2/13.9	399 R4	1204

REGISTERED ELECTRICAL ENGINEER 12/19/02 DATE

12-6-04
PLANS APPROVAL DATE

REGISTERED PROFESSIONAL ENGINEER JENS ERLINGSSON No. 8249 Exp. 9/30/06 ELECTRICAL STATE OF CALIFORNIA

PB POWER, Inc.
A Parsons Brinckerhoff Company
303 Second St., Suite 700N
San Francisco, CA 94107-1317

The State of California or its officers or agents shall not be responsible for the accuracy or completeness of electronic copies of this plan sheet.

Caltrans now has a web site! To get to the web site, go to http://www.dot.ca.gov

Caltrans Metric

REQUEST FOR INFORMATION NOT ADDRESSED IN THIS CCO REMAIN IN FORCE

MARK	DATE	DESCRIPTIONS	BY	CH'D	CCO#
4	03/24/11	BIKE PATH CONDUIT	TW	RG	73
3	06/11/10	BIKE PATH CONDUIT	TW	RG	73
2	03/04/08	BARRIER MODIFICATIONS	JS BM	RG SE	44
1	02/19/08	ELECTRICAL MODIFICATIONS	MP EL	RR	42

REVISIONS

CONTRACT CHANGE ORDER NO. 73
SHEET 43 OF 52

REGISTERED PROFESSIONAL ENGINEER MANUEL FUNTO TAKAKI No. E 8651 Exp. 9/30/2008 ELECTRICAL STATE OF CALIFORNIA
FOR REVISION ONLY 1

REGISTERED PROFESSIONAL ENGINEER S. A. ESTOQUE, JR. No. E-10151 Exp. 12/31/2008 ELECTRICAL STATE OF CALIFORNIA
FOR REVISION ONLY 2

REGISTERED PROFESSIONAL ENGINEER SYN YEE CHIN No. 18186 Exp. 09/30/2011 ELECTRICAL STATE OF CALIFORNIA
FOR REVISION ONLY 3 4

3 REVISIONS SUPERCEDED 4

CONDUIT DATA

Conduit No	Reference	Size	Type	Total Fill (mm²)	Allowable Fill (mm²)	Included Cable No.	Conductor Type
5456	E-184	53	RGS conduit	366.10	879.42	A-3036-1	1-3/C + gnd #4 , 600 V, EPR insulation
						Pull rope	Soft-Fiber Polyester
5457	E-184	53	RGS conduit	196.2	879.42	2149	1 - 2 pair, shielded #18 with IS/OA, 300 V, PVC jacket
						Pull rope	Soft-Fiber Polyester
						2150	1 - 2 pair, shielded #18 with IS/OA, 300 V, PVC jacket
5458	E-184	53	RGS conduit	0.00	879.42	Pull rope	Soft-Fiber Polyester
5459	E-184	41	RGS conduit	0.00	534.55	Pull rope	Soft-Fiber Polyester
5460	E-184	41	RGS conduit	227.46	534.55	Pull rope	Soft-Fiber Polyester
						UP208-2	1-2/C + gnd #8, 600 V, EPR insulation
5461	E-184	53	RGS conduit	0.00	879.42	Pull rope	Soft-Fiber Polyester
5462	E-184	53	RGS conduit	227.46	879.42	Pull rope	Soft-Fiber Polyester
						UP208-2	1-2/C + gnd #8, 600 V, EPR insulation
5463	E-184	53	RGS conduit	98.10	879.42	2148	1 - 2 pair, shielded #18 with IS/OA, 300 V, PVC jacket
						Pull rope	Soft-Fiber Polyester
5464	E-184	53	RGS conduit	0.00	879.42	Pull rope	Soft-Fiber Polyester
5465	E-184	53	RGS conduit	0.00	879.42	Pull rope	Soft-Fiber Polyester
5466	E-184	53	RGS conduit	0.00	879.42	Pull rope	Soft-Fiber Polyester
5471	E-184	41	RGS conduit	212.85	534.55	Pull rope 4	Soft-Fiber Polyester
						LP222-2A,4A	3 + 1 gnd #6, #8, 600 V, RHH/RHW Insulation
5472	E-184	41	RGS conduit	212.85	534.55	Pull rope 4	Soft-Fiber Polyester
						LP222-6A,8A	3 + 1 gnd #6, #8, 600 V, RHH/RHW Insulation
5473	E-184	53	RGS conduit	281.15	1165.23	Pull rope	Soft-Fiber Polyester
						LP222-2,4	1-3/C + gnd #6, 600 V, EPR insulation
5474	E-184	53	RGS conduit	281.15	1165.23	Pull rope	Soft-Fiber Polyester
				4		LP222-6,8	1-3/C + gnd #6, 600 V, EPR insulation
5475	E-184	53	RGS conduit	0.00	879.42	Pull rope	Soft-Fiber Polyester
5476	E-184	53	RGS conduit	0.00	879.42	Pull rope	Soft-Fiber Polyester
5477	E-184	41	RGS conduit	0.00	534.55	Pull rope	Soft-Fiber Polyester
5478	E-184	41	RGS conduit	0.00	534.55	Pull rope	Soft-Fiber Polyester
5479	E-184	53	RGS conduit	0.00	879.42	Pull rope	Soft-Fiber Polyester
5480	E-184	53	RGS conduit	0.00	879.42	Pull rope	Soft-Fiber Polyester
5481	E-184	53	RGS conduit	0.00	879.42	Pull rope	Soft-Fiber Polyester
5482	E-184	53	RGS conduit	0.00	879.42	Pull rope	Soft-Fiber Polyester
5483	E-184	41	RGS conduit	0.00	534.55	Pull rope	Soft-Fiber Polyester
5484	E-184	41	RGS conduit	0.00	534.55	Pull rope	Soft-Fiber Polyester
5485	E-184	53	RGS conduit	0.00	879.42	Pull rope	Soft-Fiber Polyester
5486	E-184	53	RGS conduit	0.00	879.42	Pull rope	Soft-Fiber Polyester
5487	E-184	53	RGS conduit	0.00	879.42	Pull rope	Soft-Fiber Polyester
5488	E-184	53	RGS conduit	0.00	879.42	Pull rope	Soft-Fiber Polyester
5489	E-184	41	RGS conduit	268.36	534.55	S-2031-4	3 + 1 gnd #4,#8, 600 V, RHH/RHW Insulation
						Pull rope	Soft-Fiber Polyester
5490	E-184	41	RGS conduit	212.85	534.55	Pull rope	Soft-Fiber Polyester
						A-2035-4	3 + 1 gnd #6,#8, 600 V, RHH/RHW Insulation
5491	E-184	53	RGS conduit	0.00	879.42	S-2031-3	1-3/C + gnd #4, 600 V, EPR insulation
						Pull rope	Soft-Fiber Polyester
5492	E-184	53	RGS conduit	0.00	879.42	A-2035-3	1-3/C + gnd #6, 600 V, EPR insulation
						Pull rope	Soft-Fiber Polyester

THIS PLAN ACCURATE FOR ELECTRICAL WORK ONLY.

CONDUIT DATA

Conduit No	Reference	Size	Type	Total Fill (mm²)	Allowable Fill (mm²)	Included Cable No.	Conductor Type
5493	E-184	53	RGS conduit	0.00	879.42	Pull rope	Soft-Fiber Polyester
5494	E-184	53	RGS conduit	0.00	879.42	Pull rope	Soft-Fiber Polyester
5495	E-184	41	RGS conduit	0.00	534.55	Pull rope	Soft-Fiber Polyester
5497	E-184	53	RGS conduit	0.00	879.42	Pull rope	Soft-Fiber Polyester
5498	E-183	53	RGS conduit	0.00	879.42	Pull rope	Soft-Fiber Polyester
5501	E-185	41	RGS conduit	0.00	534.55	Pull rope	Soft-Fiber Polyester
5502	E-185	41	RGS conduit	0.00	534.55	Pull rope	Soft-Fiber Polyester
5503	E-185	53	RGS conduit	0.00	879.42	Pull rope	Soft-Fiber Polyester
5504	E-185	53	RGS conduit	0.00	879.42	Pull rope	Soft-Fiber Polyester
5505	E-185	53	RGS conduit	0.00	879.42	Pull rope	Soft-Fiber Polyester
5506	E-185	53	RGS conduit	0.00	879.42	Pull rope	Soft-Fiber Polyester
5512	E-185	41	RGS conduit	212.85	534.55	Pull rope	Soft-Fiber Polyester
						A-2014-2	3 + 1 gnd #6,#8, 600 V, RHH/RHW Insulation
5513	E-185	53	RGS conduit	0.00	879.42	Pull rope	Soft-Fiber Polyester
5514	E-185	53	RGS conduit	0.00	879.42	Pull rope	Soft-Fiber Polyester
5515	E-185	53	RGS conduit	0.00	879.42	Pull rope	Soft-Fiber Polyester
5516	E-185	53	RGS conduit	0.00	879.42	Pull rope	Soft-Fiber Polyester
5517	E-185	53	RGS conduit	0.00	879.42	Pull rope	Soft-Fiber Polyester
5518	E-185	53	RGS conduit	0.00	879.42	Pull rope	Soft-Fiber Polyester
5519	E-185	41	RGS conduit	212.85	534.55	S-2032-2	3 + 1 gnd #6,#8, 600 V, RHH/RHW Insulation
						Pull rope	Soft-Fiber Polyester
5520	E-185	41	RGS conduit	0.00	534.55	Pull rope	Soft-Fiber Polyester
5521	E-185	53	RGS conduit	366.10	879.42	Pull rope	Soft-Fiber Polyester
						S-2032-1	1-3/C + gnd #4, 600 V, EPR insulation
5522	E-185	53	RGS conduit	0.00	879.42	Pull rope	Soft-Fiber Polyester
5523	E-185	53	RGS conduit	0.00	879.42	Pull rope	Soft-Fiber Polyester
5524	E-185	53	RGS conduit	0.00	879.42	Pull rope	Soft-Fiber Polyester
5528	E-185	41	RGS conduit	0.00	534.55	Pull rope	Soft-Fiber Polyester

For continuation, see next sheet.

CONDUIT AND TRAY SCHEDULE

E-444

DESIGN OVERSIGHT
BEHZAD GOLEMOHAMMADI

CALCULATED/DESIGNED BY PBP
CHECKED BY AB
DATE 8/02 8/02
REVISED BY DATE REVISED

STATE OF CALIFORNIA - DEPARTMENT OF TRANSPORTATION
Caltrans

LAST REVISION 00-00-00
DATE PLOTTED => 15-APR-2011
TIME PLOTTED => 13:23

FOR REDUCED PLANS ORIGINAL SCALE IS IN MILLIMETERS 0 20 40 60 80

DGN FILE =>04-0120f1_0399R04.dgn
USERNAME =>llorico

CU 04251 EA 0120F1

DIST	COUNTY	ROUTE	KILOMETER POST TOTAL PROJECT	SHEET No	TOTAL SHEETS
04	SF	80	13.2/13.9	400 R6	1204

Caltrans Metric

Jens Erlingsson 12/19/02
REGISTERED ELECTRICAL ENGINEER DATE

12-6-04
PLANS APPROVAL DATE

REGISTERED PROFESSIONAL ENGINEER JENS ERLINGSSON No. 8249 Exp. 9/30/06 ELECTRICAL STATE OF CALIFORNIA

PB POWER, Inc.
A Parsons Brinckerhoff Company
303 Second St., Suite 700N
San Francisco, CA 94107-1317

The State of California or its officers or agents shall not be responsible for the accuracy or completeness of electronic copies of this plan sheet.

Caltrans now has a web site! To get to the web site, go to http://www.dot.ca.gov

REGISTERED PROFESSIONAL ENGINEER SYN YEE CHIN No. 18186 Exp. 09/30/2011 ELECTRICAL STATE OF CALIFORNIA
Syn Yee Chin
FOR REVISION ONLY 4 5 6

REGISTERED PROFESSIONAL ENGINEER FADI WALIEDDINE No. 11465 Exp. 12/31/2009 ELECTRICAL STATE OF CALIFORNIA
FOR REVISION ONLY 2 3

REGISTERED PROFESSIONAL ENGINEER S. A. ESTOQUE, JR. No. E-10151 Exp. 12/31/2009 ELECTRICAL STATE OF CALIFORNIA
FOR REVISION ONLY 1

4 REVISIONS SUPERCEDED 6

REQUEST FOR INFORMATION NOT ADDRESSED IN THIS CCO REMAIN IN FORCE

MARK	DATE	DESCRIPTIONS	BY	CH'D	CCO#
6	03/18/11	BIKE PATH CONDUIT	TW	RG	73
5	01/07/11	ELECTRICAL WARNING SYSTEMS	TW	RG	61
4	06/11/10	BIKE PATH CONDUIT	TW	RG	73
3	12/11/09	TOWER UTILITY PANELS	SYC	RG FW	70
2	08/03/09	ELECTRICAL WARNING SYSTEMS	JS TW	RG FW	61
1	03/04/08	BARRIER MODIFICATIONS	JS BM	RG SE	44

REVISIONS

CONTRACT CHANGE ORDER NO. 73
SHEET 44 OF 52

CONDUIT DATA

Conduit No.	Reference	Size	Type	Total Fill (mm²)	Allowable Fill (mm²)	Included Cable No.	Conductor Type
5529	E-185	53	RGS conduit	0.00	879.42	Pull rope	Soft-Fiber Polyester
5530	E-185	41	RGS conduit	0.00	534.55	Pull rope	Soft-Fiber Polyester
5531	E-185	41	RGS conduit 6	0.00	534.55	Pull rope	Soft-Fiber Polyester 6
5532	E-185	41	RGS conduit	0.00	534.55	Pull rope	Soft-Fiber Polyester 6
5533	E-185	53	RGS conduit	0.00	879.42	Pull rope	Soft-Fiber Polyester 6
5534	E-185	53	RGS conduit	0.00	879.42	Pull rope	Soft-Fiber Polyester
5535	E-185	53	RGS conduit	0.00	879.42	Pull rope	Soft-Fiber Polyester
5536	E-185	53	RGS conduit	0.00	879.42	Pull rope	Soft-Fiber Polyester
5537	E-185	53	RGS conduit 6	0.00	879.42	Pull rope	Soft-Fiber Polyester
5543	E-185	41	RGS conduit	212.85	534.55	Pull rope	Soft-Fiber Polyester 6
						LP223-2A,4A	3 +1 gnd #6, #8, 600V, RHH/RHW insulation
5544	E-185	41	RGS conduit	212.85	708.28	Pull rope	Soft-Fiber Polyester 6
						LP223-6A,8A	3 +1 gnd #6, #8, 600V, RHH/RHW insulation
5545	E-185	53	RGS conduit	454.92	681.55	Pull rope	Soft-Fiber Polyester
						UP208-6A	1-2/C + gnd #8, 600 V, EPR insulation
					6	UP208-6B	1-2/C + gnd #8, 600 V, EPR insulation
5546	E-212	103	RGS conduit	2780.99	3324.51	2391	3-1/C #4/0 + 1/C #1/0 gnd, 15 kV, EPR insulation
						Pull rope	Soft-Fiber Polyester
5547	E-185	53	RGS conduit	0.00	879.42	Pull rope	Soft-Fiber Polyester
5548	E-185	53	RGS conduit	0.00	879.42	Pull rope	Soft-Fiber Polyester
5549	E-185	41	RGS conduit	0.00	534.55	Pull rope	Soft-Fiber Polyester
5550	E-185	41	RGS conduit	0.00	534.55	Pull rope	Soft-Fiber Polyester
5551	E-185	53	RGS conduit	0.00	879.42	Pull rope	Soft-Fiber Polyester
5552	E-185	53	RGS conduit	227.46	879.42	UP208-2A	1-2/C + gnd #8, 600 V, EPR insulation
						Pull rope	Soft-Fiber Polyester
5553	E-185	53	RGS conduit	98.10	879.42	Pull rope	Soft-Fiber Polyester
						2148	1 - 2 pair, shielded #18 with IS/OA, 300 V, PVC jacket
5554	E-185	53	RGS conduit	0.00	879.42	Pull rope	Soft-Fiber Polyester
5555	E-185	41	RGS conduit	527.18	534.55	A-2014-1	1-3/C + gnd #2, 600 V, EPR insulation
						Pull rope	Soft-Fiber Polyester
5556	E-185	53	RGS conduit	814.11	879.42	LP223-6,8	1-3/C + gnd #6, 600 V, EPR insulation 6
						Pull rope	Soft-Fiber Polyester 6
						UP208-6	1-2/C + gnd #8, 600 V, EPR insulation
						LP223-2,4	1-3/C + gnd #6, 600 V, EPR insulation
5557	E-186	53	RGS conduit	0.00	879.42	Pull rope	Soft-Fiber Polyester
5558	E-186	53	RGS conduit	0.00	879.42	Pull rope	Soft-Fiber Polyester
5597	E-185	53	RGS conduit	0.00	879.42	Pull rope	Soft-Fiber Polyester
7403	E-139	41	RGS conduit	0.00	534.55	Pull rope	Soft-Fiber Polyester
8001	E-293	41	RGS-PVC coated conduit	203.95	534.55	1201-6	1-2/C + gnd #10, 600 V, EPR insulation
						Pull rope	Soft-Fiber Polyester
						1201-4C	1-2/C #14, 600 V, EPR insulation
8002	E-293	41	RGS-PVC coated conduit	407.90	534.55	1201-6	1-2/C +gnd #10, 600 V, EPR insulation
						1201-2	1-2/C + gnd #10, 600 V, EPR insulation
						Pull rope	Soft-Fiber Polyester
						1201-4B	1-2/C #14, 600 V, EPR insulation
						1201-4C	1-2/C #14, 600 V, EPR insulation
8003	E-293	21	RGS-PVC coated conduit	102.61	185.01	2204-4	1-2/C + gnd #12, 600 V, EPR insulation
						Pull rope	Soft-Fiber Polyester
8004	E-293	41	RGS-PVC coated conduit	203.95	534.55	1201-1	1-2/C + gnd #10, 600 V, EPR insulation
						Pull rope	Soft-Fiber Polyester
						1201-4A	1-2/C #14, 600 V, EPR insulation
8005	E-293	41	RGS-PVC coated conduit	126.88	534.55	2204-3	1-2/C + gnd #10, 600 V, EPR insulation
						Pull rope	Soft-Fiber Polyester
8006	E-293, E-300	53	RGS-PVC coated conduit	330.83	879.42		
						2204-3	1-2/C + gnd #10, 600 V, EPR insulation
						1201-1	1-2/C + gnd #10, 600 V, EPR insulation
						Pull rope	Soft-Fiber Polyester
						1201-4A	1-2/C #14, 600 V, EPR insulation

CONDUIT DATA

Conduit No.	Reference	Size	Type	Total Fill (mm²)	Allowable Fill (mm²)	Included Cable No.	Conductor Type
8007	E-293, E-300	53	RGS-PVC coated conduit	126.88	879.42	Pull rope	Soft-Fiber Polyester
						2204-3	1-2/C + gnd #10, 600 V, EPR insulation
8008	E-293	53	RGS-PVC coated conduit	772.13	879.42	2204-9	1-3/C #14, 600 V, EPR insulation
						2204-2	1-3/C #14, 600 V, EPR insulation
						2204-1	1-3/C #14, 600 V, EPR insulation
						2204-10	1-3/C #14, 600 V, EPR insulation
						Pull rope	Soft-Fiber Polyester
						2204-11	1-3/C #14, 600 V, EPR insulation
						UP210-3	1-2/C + gnd #8, 600 V, EPR insulation
						2204-3	1-2/C + gnd #10, 600 V, EPR insulation
8010	E-293, E-264C	41	RGS-PVC coated conduit	203.95	534.55	1201-2	1-2/C + gnd #10, 600 V, EPR insulation
						Pull rope	Soft-Fiber Polyester
						1201-4B	1-2/C #14, 600 V, EPR insulation
8011	E-264A, E-293	41	RGS-PVC coated conduit	425.90	534.55		
						2204-1	1-3/C #14, 600 V, EPR insulation
						2204-2	1-3/C #14, 600 V, EPR insulation
						2204-9	1-3/C #14, 600 V, EPR insulation
						2204-10	1-3/C #14, 600 V, EPR insulation
						2204-11	1-3/C #14, 600 V, EPR insulation
						Pull rope	Soft-Fiber Polyester
8012	E-293, E-300	41	RGS-PVC coated conduit	227.46	534.55	Pull rope	Soft-Fiber Polyester
	E-264C					UP210-3	1-2/C + gnd #8, 600 V, EPR insulation
8013	E-294	41	RGS-PVC coated conduit	203.95	414.28	2201-6	1-2/C + gnd #10, 600 V, EPR insulation
						Pull rope	Soft-Fiber Polyester
						2201-4C	1-2/C #14, 600 V, EPR insulation
8014	E-264A, E-293	53	RGS-PVC coated conduit	611.85	879.42	1201-6	1-2/C + gnd #10, 600 V, EPR insulation
						1201-2	1-2/C + gnd #10, 600 V, EPR insulation
						1201-1	1-2/C + gnd #10, 600 V, EPR insulation
						Pull rope	Soft-Fiber Polyester
						1201-4A	1-2/C #14, 600 V, EPR insulation
						1201-4B	1-2/C #14, 600 V, EPR insulation
						1201-4C	1-2/C #14, 600 V, EPR insulation
8015	E-293, E-300	41	RGS-PVC coated conduit	130.00	534.55	2204-8	3-Pr #16 with overall shield 600 V, PVC insulation
						Pull rope	Soft-Fiber Polyester
8140	E-294	41	RGS-PVC coated conduit	203.95	534.55	Pull rope	Soft-Fiber Polyester
						2201-1	1-2/C + gnd #10, 600 V, EPR insulation
						2201-4A	1-2/C #14, 600 V, EPR insulation

For continuation, see next sheet.

CONDUIT AND TRAY SCHEDULE

E-445

REVISED BY | DATE REVISED | DATE | CALCULATED/DESIGNED BY | CHECKED BY | DESIGN OVERSIGHT

STATE OF CALIFORNIA - DEPARTMENT OF TRANSPORTATION
Caltrans

LAST REVISION 00-00-00 | DATE PLOTTED => 15-APR-2011 | TIME PLOTTED => 13:23

DIST	COUNTY	ROUTE	KILOMETER POST TOTAL PROJECT	SHEET No	TOTAL SHEETS
04	SF	80	13.2/13.9	407 S9R5	1204

REGISTERED ELECTRICAL ENGINEER 6/12/08 DATE

PLANS APPROVAL DATE

REGISTERED PROFESSIONAL ENGINEER FADI WALIEDDINE No. 11465 Exp. 12/31/2009 ELECTRICAL STATE OF CALIFORNIA

PB AMERICAS, Inc.
A Parsons Brinckerhoff Company
303 Second St., Suite 700N
San Francisco, CA 94107-1317

The State of California or its officers or agents shall not be responsible for the accuracy or completeness of electronic copies of this plan sheet.

Caltrans now has a web site! To get to the web site, go to http://www.dot.ca.gov

Caltrans Metric

REGISTERED PROFESSIONAL ENGINEER SYN YEE CHIN No. 18186 Exp. 09/30/2011 ELECTRICAL STATE OF CALIFORNIA

Syn Yee Chin
FOR REVISION ONLY
1 2 3 4 5

△2 REVISIONS SUPERCEDED △5

REQUEST FOR INFORMATION NOT ADDRESSED IN THIS CCO REMAIN IN FORCE

MARK	DATE	DESCRIPTIONS	BY	CH'D	CCO#
△5	04/15/11	BIKE PATH CONDUIT	TW	RG	73
△4	03/01/11	BASE INTEGRATION	RSB	WB	150
△3	01/07/11	ELECTRICAL WARNING SYSTEMS	TW	RG	61
△2	06/11/10	BIKE PATH CONDUIT	TW	RG	73
△1	03/26/10	DEHUMIDIFIER SCADA INTERFACE	TW	RG SYC	130
△0	03/30/09	SERVICE PLATFORM ELECTRICAL CHANGES	RR RY	RG FW	55

REVISIONS

CONTRACT CHANGE ORDER NO. 73
SHEET 45 OF 52

CONDUIT DATA

Conduit No	Reference	Size	Type	Total Fill (mm2)	Allowable Fill (mm2)	Included Cable No.	Conductor Type
5212A	E-114A	78	RGS Conduit		1935.24	Pull rope	Soft-Fiber Polyester
5212B	E-114A	53	RGS Conduit		1935.24	Pull rope	Soft-Fiber Polyester
5212C	E-114A	53	RGS Conduit		1935.24	Pull rope	Soft-Fiber Polyester
5212D	E-114A	78	RGS Conduit		1935.24	Pull rope	Soft-Fiber Polyester
5212E	E-114A	78	RGS Conduit		1935.24	Pull rope	Soft-Fiber Polyester
5212F	E-114A	78	RGS Conduit	562.30 △5	1499.81	Pull rope	Soft-Fiber Polyester △5
						LP219-2,4	1-3/C + gnd #6, 600 V, EPR insulation
						LP219-6,8	1-3/C + gnd #6, 600 V, EPR insulation
5212G	E-114A	78	RGS Conduit		1935.24	Pull rope	Soft-Fiber Polyester
5212H	E-114A	78	RGS Conduit		1935.24	Pull rope	Soft-Fiber Polyester
5212J	E-114A	78	RGS Conduit		1935.24	Pull rope	Soft-Fiber Polyester
5212K	E-114A	78	RGS Conduit		1935.24	Pull rope	Soft-Fiber Polyester
5212L	E-114A	78	RGS Conduit		1935.24	Pull rope	Soft-Fiber Polyester
5212M	E-114A	78	RGS Conduit		1935.24	Pull rope	Soft-Fiber Polyester
5212N	E-114A	78	RGS Conduit		1935.24	Pull rope	Soft-Fiber Polyester
5212P	E-114A	78	RGS Conduit		1935.24	Pull rope	Soft-Fiber Polyester
5212Q	E-114A	78	RGS Conduit		1935.24	Pull rope	Soft-Fiber Polyester
5212R	E-114A	78	RGS Conduit		1935.24	Pull rope	Soft-Fiber Polyester
5212S	E-114A	78	RGS Conduit		1935.24	Pull rope	Soft-Fiber Polyester
5212T	E-114A	78	RGS Conduit		1935.24	Pull rope	Soft-Fiber Polyester
5212U	E-114A	78	RGS Conduit		1935.24	Pull rope	Soft-Fiber Polyester
5214A	E-115	78	RGS Conduit		1935.24	Pull rope	Soft-Fiber Polyester
5214B	E-115	78	RGS Conduit		1935.24	Pull rope	Soft-Fiber Polyester
5214C	E-115	78	RGS Conduit		1935.24	Pull rope	Soft-Fiber Polyester
5214D	E-115	78	RGS Conduit		1935.24	Pull rope	Soft-Fiber Polyester
5215A	E-114B	78	RGS Conduit	196.20	1935.24	Pull rope	Soft-Fiber Polyester
						2120-1	1-2PR #18 twisted shielded w/overall shield
						2121-1	1-2PR #18 twisted shielded w/overall shield
5215B	E-114B	78	RGS Conduit		1935.24	Pull rope	Soft-Fiber Polyester
5215C	E-114B	53	RGS Conduit		1935.24	Pull rope	Soft-Fiber Polyester
5215D	E-114B	78	RGS Conduit		1935.24	Pull rope	Soft-Fiber Polyester
5215E	E-114B	78	RGS Conduit		1935.24	Pull rope	Soft-Fiber Polyester
5215F	E-114B	78	RGS Conduit	611.85 △5	1935.24	Pull rope	Soft-Fiber Polyester △5
						1201-1	1-2/C + gnd #10, 600 V, EPR insulation
						1201-2	1-2/C + gnd #10, 600 V, EPR insulation
						1201-6	1-2/C + gnd #10, 600 V, EPR insulation
						1201-4A	1-2/C #14, 600 V, EPR insulation
						1201-4B	1-2/C #14, 600 V, EPR insulation
						1201-4C	1-2/C #14, 600 V, EPR insulation
5215G	E-114B	78	RGS Conduit	562.30 △5	1499.81	Pull rope	Soft-Fiber Polyester
						LP220-2,4	1-3/C + gnd #6, 600 V, EPR insulation △5
						LP220-6,8	1-3/C + gnd #6, 600 V, EPR insulation
5215H	E-114B	78	RGS Conduit		1935.24	Pull rope	Soft-Fiber Polyester

CONDUIT DATA

Conduit No	Reference	Size	Type	Total Fill (mm2)	Allowable Fill (mm2)	Included Cable No.	Conductor Type
5215J	E-114B	78	RGS Conduit		1935.24	Pull rope	Soft-Fiber Polyester
5215K	E-114B	78	RGS Conduit		1935.24	Pull rope	Soft-Fiber Polyester
5215L	E-114B	78	RGS Conduit		1935.24	Pull rope	Soft-Fiber Polyester
5215M	E-114B	78	RGS Conduit		1935.24	Pull rope	Soft-Fiber Polyester
5216A	E-116	78	RGS Conduit		1935.24	Pull rope	Soft-Fiber Polyester
5216B	E-116	78	RGS Conduit		1935.24	Pull rope	Soft-Fiber Polyester
5216C	E-116	78	RGS Conduit		1935.24	Pull rope	Soft-Fiber Polyester
5216D	E-116	78	RGS Conduit		1935.24	Pull rope	Soft-Fiber Polyester
5216E	E-116	78	RGS Conduit		1935.24	Pull rope	Soft-Fiber Polyester
5217A	E-114B	78	RGS Conduit		1935.24	Pull rope	Soft-Fiber Polyester
5217B	E-114B	78	RGS Conduit		1935.24	Pull rope	Soft-Fiber Polyester
5217C	E-114B	78	RGS Conduit	2627.31	2564.19	2479-1	72 Fiber, single mode fiber optic riser cable inside brown innerduct
						White Innerduct	25.4 mm Smoothwall white innerduct
						Black Innerduct	25.4 mm Smoothwall black innerduct
5217D	E-114B	78	RGS Conduit		1935.24	Pull rope	Soft-Fiber Polyester
5217E	E-114B	78	RGS Conduit		1935.24	Pull rope	Soft-Fiber Polyester
5217F	E-114B	78	RGS Conduit	766.25 △5	1935.24	Pull rope	Soft-Fiber Polyester
						LP221-2,4	1-3/C + gnd #6, 600 V, EPR insulation △5
						LP221-6,8	1-3/C + gnd #6, 600 V, EPR insulation
						2202-3A	1-2/C #14, 600 V, EPR insulation
						2202-1	1-2/C + gnd #10, 600 V, EPR insulation
5217G	E-114B	78	RGS Conduit		1935.24	Pull rope	Soft-Fiber Polyester
5217H	E-114B	78	RGS Conduit		1935.24	Pull rope	Soft-Fiber Polyester
5217J	E-114B	78	RGS Conduit		1935.24	Pull rope	Soft-Fiber Polyester
5217K	E-114B	78	RGS Conduit		1935.24	Pull rope	Soft-Fiber Polyester
5217L	E-114B	78	RGS Conduit		1935.24	Pull rope	Soft-Fiber Polyester

CONDUIT AND TRAY SCHEDULE

E-449DE

REVISED BY | DATE REVISED | DATE | CALCULATED/DESIGNED BY | CHECKED BY | DESIGN OVERSIGHT

STATE OF CALIFORNIA - DEPARTMENT OF TRANSPORTATION
Caltrans

LAST REVISION 00-00-00 | DATE PLOTTED => 15-APR-2011 TIME PLOTTED => 13:23

FOR REDUCED PLANS ORIGINAL SCALE IS IN MILLIMETERS 0 20 40 60 80

DGN FILE =>04-0120f1_0407S09R05.dgn
USERNAME =>llorico

CU 04251 | EA 0120F1

DIST	COUNTY	ROUTE	KILOMETER POST TOTAL PROJECT	SHEET No	TOTAL SHEETS
04	SF	80	13.2/13.9	407 S10R2	1204

REGISTERED ELECTRICAL ENGINEER 6/12/08 DATE

PLANS APPROVAL DATE

REGISTERED PROFESSIONAL ENGINEER FADI WALIEDDINE No. 11465 Exp. 12/31/2009 ELECTRICAL STATE OF CALIFORNIA

PB AMERICAS, Inc.
A Parsons Brinckerhoff Company
303 Second St., Suite 700N
San Francisco, CA 94107-1317

The State of California or its officers or agents shall not be responsible for the accuracy or completeness of electronic copies of this plan sheet.

Caltrans now has a web site! To get to the web site, go to http://www.dot.ca.gov

Caltrans Metric

REQUEST FOR INFORMATION NOT ADDRESSED IN THIS CCO REMAIN IN FORCE

MARK	DATE	DESCRIPTIONS	BY	CH'D	CCO#
2	03/24/11	BIKE PATH CONDUIT	TW	RG	73
1	06/11/10	BIKE PATH CONDUIT	TW	RG	73
0	03/30/09	SERVICE PLATFORM ELECTRICAL CHANGES	RR RY	RG MP	55

REVISIONS

CONTRACT CHANGE ORDER NO. 73
SHEET 46 OF 52

1 REVISIONS SUPERCEDED 2

REGISTERED PROFESSIONAL ENGINEER SYN YEE CHIN No. 18186 Exp. 09/30/2011 ELECTRICAL STATE OF CALIFORNIA

Syn Yee Chin
FOR REVISION ONLY
1 2

CONDUIT DATA

Conduit No	Reference	Size	Type	Total Fill (mm²)	Allowable Fill (mm²)	Included Cable No.	Conductor Type
5217M	E-114B	78	RGS Conduit		1935.24	Pull rope	Soft-Fiber Polyester
5217N	E-114B	78	RGS Conduit		1935.24	Pull rope	Soft-Fiber Polyester
5217P	E-114B	78	RGS Conduit		1935.24	Pull rope	Soft-Fiber Polyester
5218A	E-117	78	RGS Conduit		1935.24	Pull rope	Soft-Fiber Polyester
5218B	E-117	78	RGS Conduit		1935.24	Pull rope	Soft-Fiber Polyester
5218C	E-117	53	RGS Conduit		1935.24	Pull rope	Soft-Fiber Polyester
5218D	E-117	78	RGS Conduit		1935.24	Pull rope	Soft-Fiber Polyester
5218E	E-117	78	RGS Conduit		1935.24	Pull rope	Soft-Fiber Polyester
5219A	E-114B	78	RGS Conduit		1935.24	Pull rope	Soft-Fiber Polyester
5219B	E-114B	78	RGS Conduit		1935.24	Pull rope	Soft-Fiber Polyester
5219C	E-114B	78	RGS Conduit		1935.24	Pull rope	Soft-Fiber Polyester
5219D	E-114B	78	RGS Conduit		1935.24	Pull rope	Soft-Fiber Polyester
5219E	E-114B	78	RGS Conduit		1935.24	Pull rope	Soft-Fiber Polyester
5219F	E-114B	78	RGS Conduit		1935.24	Pull rope	Soft-Fiber Polyester
5219G	E-114B	78	RGS Conduit		1935.24	Pull rope	Soft-Fiber Polyester
5219H	E-114B	78	RGS Conduit		1935.24	Pull rope	Soft-Fiber Polyester
5219J	E-114B	78	RGS Conduit		1935.24	Pull rope	Soft-Fiber Polyester
5219K	E-114B	78	RGS Conduit		1935.24	Pull rope	Soft-Fiber Polyester
5219L	E-114B	78	RGS Conduit		1935.24	Pull rope	Soft-Fiber Polyester
5219M	E-114B	78	RGS Conduit		1935.24	Pull rope	Soft-Fiber Polyester
5219N	E-114B	78	RGS Conduit		1935.24	Pull rope	Soft-Fiber Polyester
5219P	E-114B	78	RGS Conduit	562.30 2	1499.81	Pull rope	Soft-Fiber Polyester 2
						LP222-2,4	1-3/C + gnd #6, 600 V, EPR insulation
						LP222-6,8	1-3/C + gnd #6, 600 V, EPR insulation
5220A	E-118	78	RGS Conduit		1935.24	Pull rope	Soft-Fiber Polyester
5220B	E-118	78	RGS Conduit		1935.24	Pull rope	Soft-Fiber Polyester
5220C	E-118	53	RGS Conduit		1935.24	Pull rope	Soft-Fiber Polyester
5220D	E-118	78	RGS Conduit		1935.24	Pull rope	Soft-Fiber Polyester
5220E	E-118	78	RGS Conduit		1935.24	Pull rope	Soft-Fiber Polyester

CONDUIT DATA

Conduit No	Reference	Size	Type	Total Fill (mm²)	Allowable Fill (mm²)	Included Cable No.	Conductor Type
5223A	E-72A, E-115	41	RGS-PVC coated conduit		534.55	Pull rope	Soft-Fiber Polyester
5223B	E-72A	41	RGS-PVC coated conduit		534.55	Pull rope	Soft-Fiber Polyester
5223C	E-72A, E-115	41	RGS-PVC coated conduit		534.55	Pull rope	Soft-Fiber Polyester
5223D	E-72A	53	Liquidtight Flex. Metal Cond.		879.42	Pull rope	Soft-Fiber Polyester
5223E	E-72A	41	RGS-PVC coated conduit		534.55	Pull rope	Soft-Fiber Polyester
5224A	E-72	53	Liquidtight Flex. Metal Cond.		879.42	Pull rope	Soft-Fiber Polyester
5225A	E-72A, E-115	41	RGS-PVC coated conduit		534.55	Pull rope	Soft-Fiber Polyester
5225B	E-72A	41	RGS-PVC coated conduit		534.55	Pull rope	Soft-Fiber Polyester
5225C	E-72A, E-115	41	RGS-PVC coated conduit		534.55	Pull rope	Soft-Fiber Polyester
5225D	E-72A	53	Liquidtight Flex. Metal Cond.		879.42	Pull rope	Soft-Fiber Polyester
5225E	E-72A	41	RGS-PVC coated conduit		534.55	Pull rope	Soft-Fiber Polyester
5226A	E-72A	78	Liquidtight Flex. Metal Cond.		1935.24	Pull rope	Soft-Fiber Polyester
5227A	E-72A	78	Liquidtight Flex. Metal Cond.		1935.24	Pull rope	Soft-Fiber Polyester
5230A	E-71A	78	Liquidtight Flex. Metal Cond.		1935.24	Pull rope	Soft-Fiber Polyester
5231A	E-71A	78	Liquidtight Flex. Metal Cond.		1935.24	Pull rope	Soft-Fiber Polyester
5233A	E-72A	78	Liquidtight Flex. Metal Cond.		1935.24	Pull rope	Soft-Fiber Polyester
5234A	E-72A	53 2	Liquidtight Flex. Metal Cond.	676.50 2	837.71	Pull rope	Soft-Fiber Polyester
						1474-5A	1-6 pair, shield #18 with overall shld, 600, PVC jacket
						1474-5B	1-6 pair, shield #18 with overall shld, 600, PVC jacket
					2	2474-5A	1-6 pair, shield #18 with overall shld, 600, PVC jacket
						2474-5B	1-6 pair, shield #18 with overall shld, 600, PVC jacket
						GFR	#2, bare copper wire, stranded
5235A	E-72A	41	Liquidtight Flex. Metal Cond.		534.55	Pull rope	Soft-Fiber Polyester
5236A	E-73A	78	Liquidtight Flex. Metal Cond.		1935.24	Pull rope	Soft-Fiber Polyester
5237A	E-73A	78	Liquidtight Flex. Metal Cond.		1935.24	Pull rope	Soft-Fiber Polyester
5238A	E-73A	41	Liquidtight Flex. Metal Cond.		534.55	Pull rope	Soft-Fiber Polyester

CONDUIT AND TRAY SCHEDULE

E-449DF

STATE OF CALIFORNIA - DEPARTMENT OF TRANSPORTATION
Caltrans

DESIGN OVERSIGHT
CALCULATED/DESIGNED BY
CHECKED BY
REVISED BY
DATE
DATE REVISED

LAST REVISION 00-00-00
DATE PLOTTED => 15-APR-2011
TIME PLOTTED => 13:23

FOR REDUCED PLANS ORIGINAL SCALE IS IN MILLIMETERS 0 20 40 60 80

DGN FILE =>04-0120f1_0407S10R02.dgn
USERNAME =>llorico

CU 04251

EA 0120F1

DIST	COUNTY	ROUTE	KILOMETER POST TOTAL PROJECT	SHEET No	TOTAL SHEETS
04	SF	80	13.2/13.9	407 S12R4	1204

REGISTERED ELECTRICAL ENGINEER — DATE 6/12/08

PLANS APPROVAL DATE

REGISTERED PROFESSIONAL ENGINEER FADI WALIEDDINE No. 11465 Exp. 12/31/2009 ELECTRICAL STATE OF CALIFORNIA

PB AMERICAS, Inc.
A Parsons Brinckerhoff Company
303 Second St., Suite 700N
San Francisco, CA 94107-1317

The State of California or its officers or agents shall not be responsible for the accuracy or completeness of electronic copies of this plan sheet.

Caltrans now has a web site! To get to the web site, go to http://www.dot.ca.gov

Caltrans Metric

REGISTERED PROFESSIONAL ENGINEER SYN YEE CHIN No. 18186 Exp. 09/30/2011 ELECTRICAL STATE OF CALIFORNIA

Syn Yee Chin
FOR REVISION ONLY
1 2 3 4

2 REVISIONS SUPERCEDED 4

REQUEST FOR INFORMATION NOT ADDRESSED IN THIS CCO REMAIN IN FORCE

MARK	DATE	DESCRIPTIONS	BY	CH'D	CCO#
4	03/24/11	BIKE PATH CONDUIT	TW	RG	73
3	01/07/11	ELECTRICAL WARNING SYSTEMS	TW	RG	61
2	06/11/10	BIKE PATH CONDUIT	TW	RG	73
1	03/26/10	DEHUMIDIFIER SCADA INTERFACE	TW	RG SYC	130
0	03/30/09	SERVICE PLATFORM ELECTRICAL CHANGES	RR RY	RG MP	55

REVISIONS

CONTRACT CHANGE ORDER NO. 73
SHEET 47 OF 52

CONDUIT DATA

Conduit No	Reference	Size	Type	Total Fill (mm²)	Allowable Fill (mm²)	Included Cable No.	Conductor Type
5272A	E-74A	78	Liquidtight Flex. Metal Cond.		1935.24	Pull rope	Soft-Fiber Polyester
5273A	E-74A	78	Liquidtight Flex. Metal Cond.		1935.24	Pull rope	Soft-Fiber Polyester
5283A	E-75A	41	RGS-PVC coated conduit	308.53	879.42	Pull rope	Soft-Fiber Polyester
						2098-2	4-1/C #4 + G, 600 V, RHH/RHW insulation
5283B	E-75A	41	RGS-PVC coated conduit	262.68	879.42	Pull rope	Soft-Fiber Polyester
						2098-1	3/C #8 + G, 600 V, RHH/RHW insulation
5283C	E-75A	41	RGS-PVC coated conduit	476.76	879.42	Pull rope	Soft-Fiber Polyester
						2098-3	4-1/C #4 + G, 600 V, RHH/RHW insulation
5283D	E-75A	53	Liquidtight Flex. Metal Cond.		879.42	Pull rope	Soft-Fiber Polyester
5283E	E-75A	41	Liquidtight Flex. Metal Cond.		534.55	Pull rope	Soft-Fiber Polyester
5284A	E-75A	53	RGS-PVC coated conduit		879.42	Pull rope	Soft-Fiber Polyester
5285A	E-75A, E-118	41	Liquidtight Flex. Metal Cond.		534.55	Pull rope	Soft-Fiber Polyester
5285B	E-75A	41	RGS-PVC coated conduit		534.55	Pull rope	Soft-Fiber Polyester
5285C	E-75A, E-118	41	RGS-PVC coated conduit		534.55	Pull rope	Soft-Fiber Polyester
5285D	E-75A	53	Liquidtight Flex. Metal Cond.		879.42	Pull rope	Soft-Fiber Polyester
5285E	E-75A	41	RGS-PVC coated conduit		534.55	Pull rope	Soft-Fiber Polyester
5286A	E-75A	78	Liquidtight Flex. Metal Cond.		1935.42	Pull rope	Soft-Fiber Polyester
5289A	E-75A	41	Liquidtight Flex. Metal Cond.		534.55	Pull rope	Soft-Fiber Polyester
5290A	E-75A	53 4	Liquidtight Flex. Metal Cond.	676.50 4	837.71	Pull rope	Soft-Fiber Polyester
						1474-8A	1-6 pair, shield #18 with overall shld, 600, PVC jacket
						1474-8B	1-6 pair, shield #18 with overall shld, 600, PVC jacket
						2474-8A	1-6 pair, shield #18 with overall shld, 600, PVC jacket
						2474-8B	1-6 pair, shield #18 with overall shld, 600, PVC jacket
						GFR	#2, bare copper wire, stranded

CONDUIT DATA

Conduit No	Reference	Size	Type	Total Fill (mm²)	Allowable Fill (mm²)	Included Cable No.	Conductor Type
5300A	E-114B	78	RGS Conduit	98.10	1935.24	Pull rope	Soft-Fiber Polyester
						1118-1	1-2PR #18 twisted shielded w/overall shield
5300B	E-114B	78	RGS Conduit		1935.24	Pull rope	Soft-Fiber Polyester
5300C	E-114B	78	RGS Conduit		1935.24	Pull rope	Soft-Fiber Polyester
5300D	E-114B	78	RGS Conduit		1935.24	Pull rope	Soft-Fiber Polyester
5300E	E-114B	78	RGS Conduit		1935.24	Pull rope	Soft-Fiber Polyester
5300F	E-114B	78	RGS Conduit	534.78	1499.81	Pull rope	Soft-Fiber Polyester
						2201-2	1-2/C + gnd #10, 600 V, EPR insulation
						2201-6	1-2/C + gnd #10, 600 V, EPR insulation
						2201-4B	1-2/C #14, 600 V, EPR insulation
						2201-4C	1-2/C #14, 600 V, EPR insulation
5300G	E-114B	78	RGS Conduit		1935.24	Pull rope	Soft-Fiber Polyester
5300H	E-114B	78	RGS Conduit		1935.24	Pull rope	Soft-Fiber Polyester
5300J	E-114B	78	RGS Conduit		1935.24	Pull rope	Soft-Fiber Polyester
5300K	E-114B	78	RGS Conduit		1935.24	Pull rope	Soft-Fiber Polyester
5300L	E-114B	78	RGS Conduit		1935.24	Pull rope	Soft-Fiber Polyester
5300M	E-114B	78	RGS Conduit		1935.24	Pull rope	Soft-Fiber Polyester
5300N	E-114B	78	RGS Conduit		1935.24	Pull rope	Soft-Fiber Polyester
5300P	E-114B	78	RGS Conduit	562.30 4	1499.81	Pull rope	Soft-Fiber Polyester 4
						LP223-2,4	1-3/C + gnd #6, 600 V, EPR insulation
						LP223-6,8	1-3/C + gnd #6, 600 V, EPR insulation

CONDUIT AND TRAY SCHEDULE

E-449DH

STATE OF CALIFORNIA - DEPARTMENT OF TRANSPORTATION
Caltrans

DESIGN OVERSIGHT | CALCULATED/DESIGNED BY | CHECKED BY | DATE | REVISED BY | DATE REVISED

LAST REVISION 00-00-00 | DATE PLOTTED => 15-APR-2011 | TIME PLOTTED => 13:24

FOR REDUCED PLANS ORIGINAL SCALE IS IN MILLIMETERS 0 20 40 60 80

DGN FILE =>04-0120F1_0407S12R04.dgn
USERNAME =>llorico

CU 04251 | EA 0120F1

DIST.	COUNTY	ROUTE	KILOMETER POST TOTAL PROJECT	SHEET NO.	TOTAL SHEETS
04	SF	80	13.2/13.9	819R3	1204

REGISTERED ENGINEER - CIVIL

12-6-04
PLANS APPROVAL DATE

REGISTERED PROFESSIONAL ENGINEER Tien Hung Ho No. C 43990 Exp. 6/30/11 CIVIL STATE OF CALIFORNIA

The State of California or its officers or agents shall not be responsible for the accuracy or completeness of electronic copies of this plan sheet.

T.Y. LIN / MOFFATT & NICHOL
825 BATTERY STREET
SAN FRANCISCO, CA 94111

Caltrans now has a web site! To get to the web site, go to: http://www.dot.ca.gov

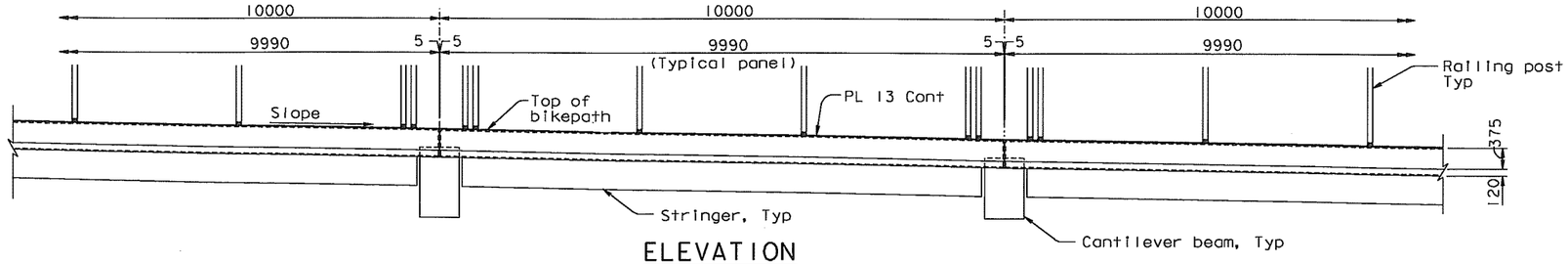

ELEVATION
1:50

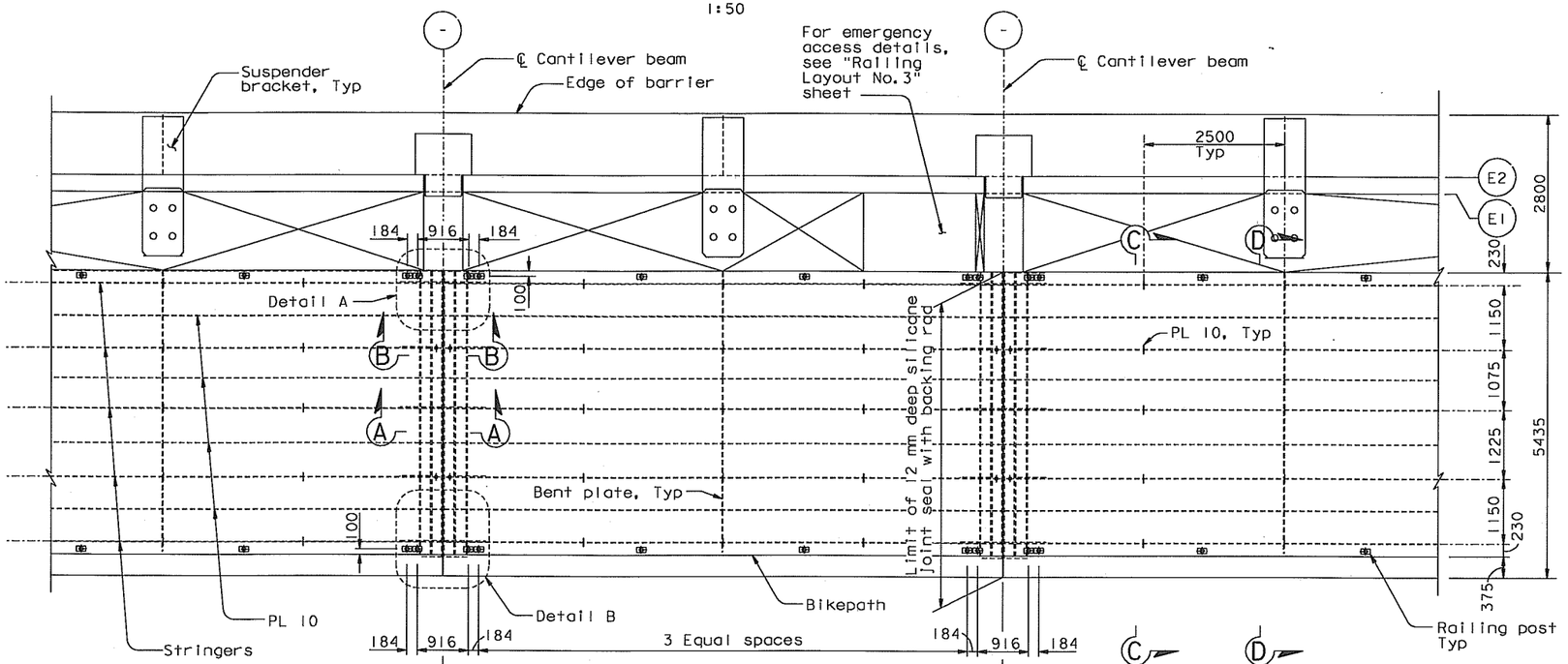

PLAN
1:50

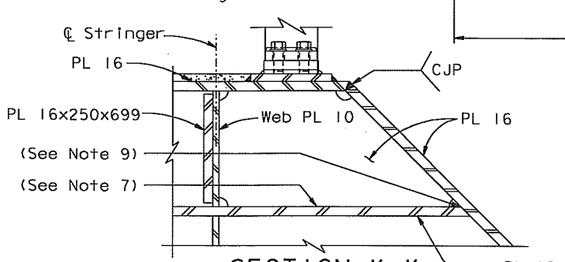

SECTION K-K
1:5
(SECTION K'-K' SIMILAR)

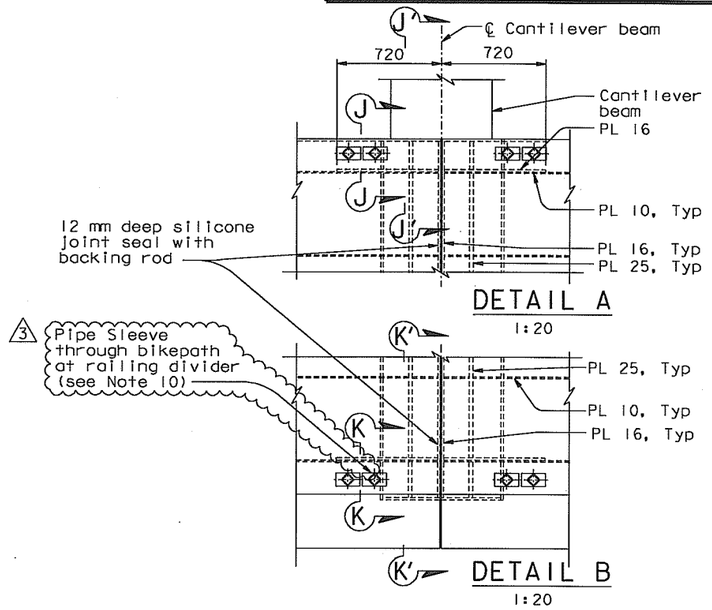

DETAIL A
1:20

DETAIL B
1:20

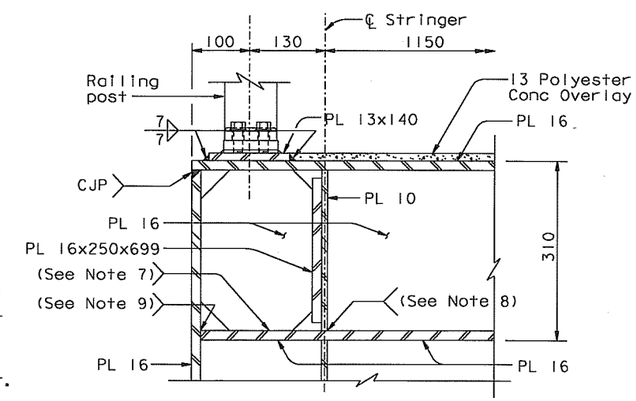

SECTION J-J
1:5
(SECTION J'-J' SIMILAR)

NOTES:

1. For cantilever beam details, see "Bikepath Details" sheets.
2. For Sections A-A and B-B, see "Bikepath Details" No. 4" sheet.
3. For Sections C-C and D-D, see "Bikepath Details No. 2" sheet.
4. For stringer details, see "Bikepath Details" sheets.
5. For railing layout, see "Railing Layout" sheets.
6. For emergency access location and details, see "Railing Layout" and "Railing Details" sheets.
7. At the Contractor's option, tight-fit is acceptable, subject to review and approval of the Engineer.
8. At the Contractor's option, 12mm single-sided fillet weld is acceptable, subject to review and approval of the Engineer.
9. At the Contractor's option, CJP with backing may be used, subject to review and approval of the Engineer.
10. For pipe sleeve through bikepath detail at railing divider locations (south side only), see "Bikepath Framing Details No. 1A" sheet. (3)

LEGEND:

(-) Indicates Panel Point

CONTRACT CHANGE ORDER NO. 73
SHEET 48 OF 52

REQUESTS FOR INFORMATION NOT ADDRESSED IN THIS CCO REMAIN IN FORCE

MARK	DATE	DESCRIPTIONS	BY	CH'D	CCO#
3	04/01/11	BIKEPATH CONDUIT	RI	TH	73
2	08/20/10	BIKEPATH DETAILS	CC	TH	99
1	07/24/09	BIKEPATH DETAILS	CC	TH	99

REVISIONS

R. Valizadeh/V. Toan/Y.L./W.L./F.C.
DESIGN OVERSIGHT
Roya Valizadeh / Vong Q. Toan / Y. Liu
SIGN OFF DATE 04/01/11

DESIGN	BY T. Ho	CHECKED T. McMeans	
DETAILS	BY R. Xu	CHECKED P. Ritchie	
QUANTITIES	BY C. Bernardo	CHECKED S. Shi	

PREPARED FOR THE STATE OF CALIFORNIA DEPARTMENT OF TRANSPORTATION

R. Manzanarez
PROJECT ENGINEER

BRIDGE NO. 34-0006L/R
KILOMETER POST 13.2/13.9

ALL DIMENSIONS ARE IN MILLIMETERS UNLESS OTHERWISE SHOWN

SAN FRANCISCO OAKLAND BAY BRIDGE
EAST SPAN SEISMIC SAFETY PROJECT
SELF-ANCHORED SUSPENSION BRIDGE
(SUPERSTRUCTURE & TOWER)

BIKEPATH FRAMING DETAILS NO. 1

Rev. Date: 5-18-98

ORIGINAL SCALE IN MILLIMETERS FOR REDUCED PLANS 0 10 20 30 40 50 60 70 80 90 100

CU 04
EA 0120F1

DISREGARD PRINTS BEARING EARLIER REVISION DATES

REVISION DATES (PRELIMINARY STAGE ONLY) 05/31/01 04/08/02 07/01/02 12/19/02

SHEET 402R3 OF

FILE => I:\bb\04-0120F1\sas\contract plans and cco\cco\cco#73\6-revision 04-01-11\dgn\agbwf01.dgn

100 % PS&E

USERNAME => DWTrrow DATE PLOTTED => 01 APR 2011 TIME PLOTTED => 13:51:36

DIST.	COUNTY	ROUTE	KILOMETER POST TOTAL PROJECT	SHEET NO.	TOTAL SHEETS
04	SF	80	13.2/13.9	819S1	1204

REGISTERED ENGINEER - CIVIL

04-01-11
PLANS APPROVAL DATE

REGISTERED PROFESSIONAL ENGINEER Tien Hung Ho No. C 43990 Exp. 06/30/11 CIVIL STATE OF CALIFORNIA

The State of California or its officers or agents shall not be responsible for the accuracy or completeness of electronic copies of this plan sheet.

T.Y. LIN / MOFFATT & NICHOL
825 BATTERY STREET
SAN FRANCISCO, CA 94111

Caltrans now has a web site! To get to the web site, go to: http://www.dot.ca.gov

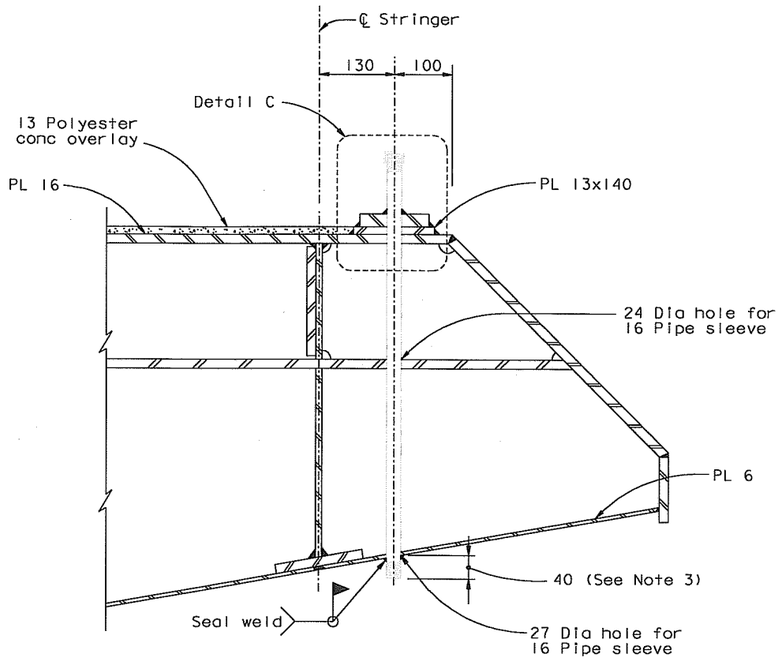

PIPE SLEEVE THROUGH BIKEPATH DETAIL
1:5

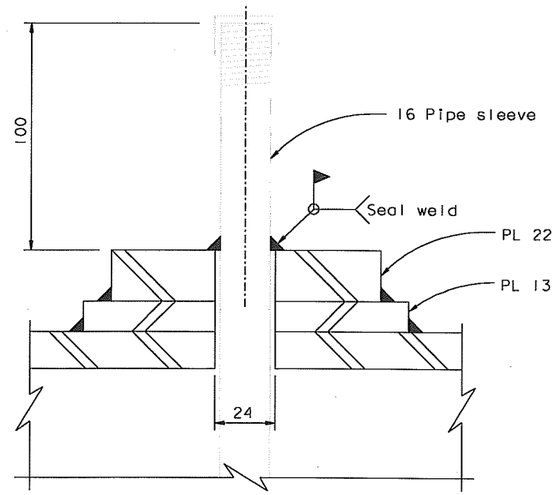

DETAIL C
1:1.25

NOTES:

1. For details not shown, see "Bikepath Details" and "Bikepath Framing Details" sheets.
2. Railing post and bolts not shown for clarity.
3. Exposed portion of pipe shall be painted.
4. Galvanized surfaces shall be repaired after seal welding. Areas with damaged paint or with no paint shall be cleaned and painted.

CONTRACT CHANGE ORDER NO. 73
SHEET 49 OF 52

REQUESTS FOR INFORMATION NOT ADDRESSED IN THIS CCO REMAIN IN FORCE

ALL DIMENSIONS ARE IN MILLIMETERS UNLESS OTHERWISE SHOWN

R. Valizadeh/V. Toan/Y. L./W. L./F. C.
DESIGN OVERSIGHT
SIGN OFF DATE 04/01/11

MARK	DATE	DESCRIPTIONS	BY	CH'D	CCO#
1	04/01/11	BIKEPATH CONDUIT	RI	TH	73

REVISIONS

DESIGN	BY R. Iliya	CHECKED T. Ho	
DETAILS	BY R. Iliya	CHECKED T. Ho	
QUANTITIES	BY R. Iliya	CHECKED T. Ho	

PREPARED FOR THE STATE OF CALIFORNIA DEPARTMENT OF TRANSPORTATION

R. Manzanarez
PROJECT ENGINEER

BRIDGE NO. 34-0006L/R
KILOMETER POST 13.2/13.9

SAN FRANCISCO OAKLAND BAY BRIDGE
EAST SPAN SEISMIC SAFETY PROJECT
SELF-ANCHORED SUSPENSION BRIDGE
(SUPERSTRUCTURE & TOWER)

BIKEPATH FRAMING DETAILS NO. 1A

Rev. Date: 5-18-98

ORIGINAL SCALE IN MILLIMETERS FOR REDUCED PLANS 0 10 20 30 40 50 60 70 80 90 100

CU 04
EA 0120F1

DISREGARD PRINTS BEARING EARLIER REVISION DATES → 04/01/11

REVISION DATES (PRELIMINARY STAGE ONLY)

SHEET 402S1 OF

FILE => I:\bb\04-01200I\sas\contract plans and cco\cco\cco#73\6-revision 04-01-11\dgn\gbwf01a.dgn

100% PS&E

USERNAME => DWinrow DATE PLOTTED => 01 APR 2011 TIME PLOTTED => 13:54:03

DIST.	COUNTY	ROUTE	KILOMETER POST TOTAL PROJECT	SHEET NO.	TOTAL SHEETS
04	SF	80	13.2/13.9	900R5	1204

REGISTERED ENGINEER - CIVIL

12-6-04

PLANS APPROVAL DATE

REGISTERED PROFESSIONAL ENGINEER Tien Hung Ho No. C 43990 Exp. 6/30/11 CIVIL STATE OF CALIFORNIA

The State of California or its officers or agents shall not be responsible for the accuracy or completeness of electronic copies of this plan sheet.

T.Y. LIN / MOFFATT & NICHOL
825 BATTERY STREET
SAN FRANCISCO, CA 94111

Caltrans now has a web site! To get to the web site, go to: http://www.dot.ca.gov

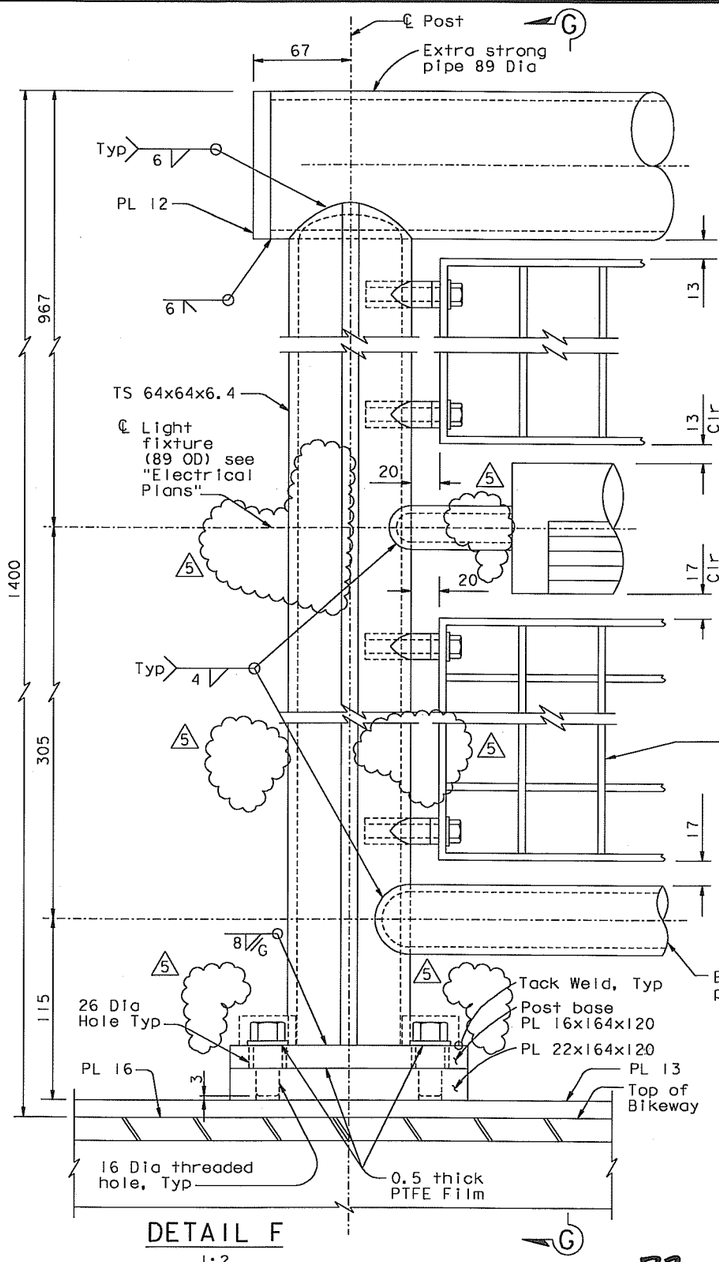

DETAIL F

1:2

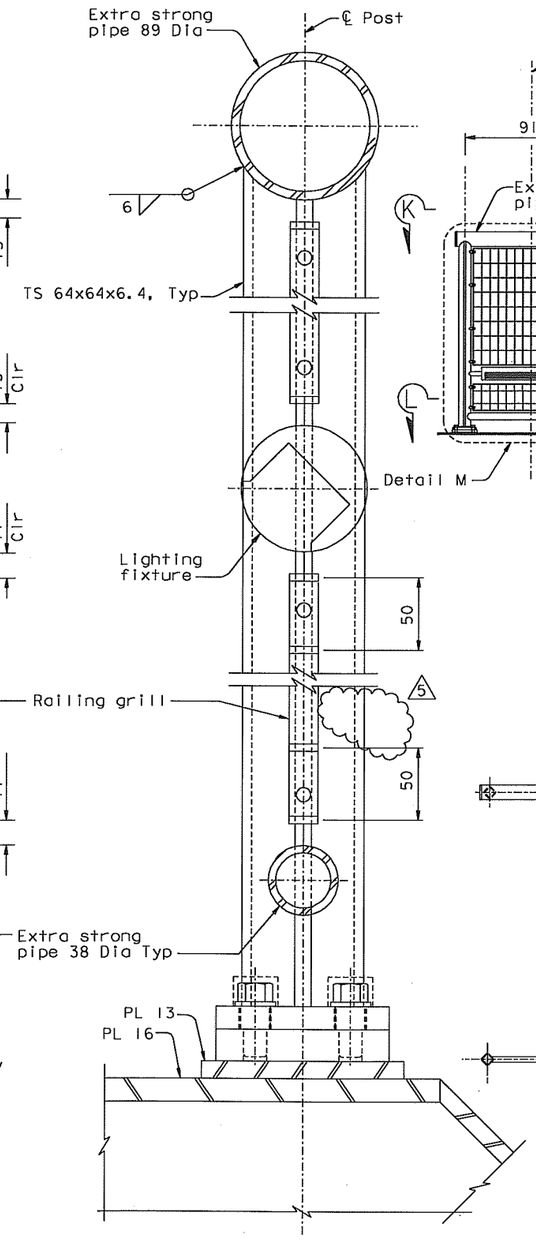

SECTION G-G

1:2

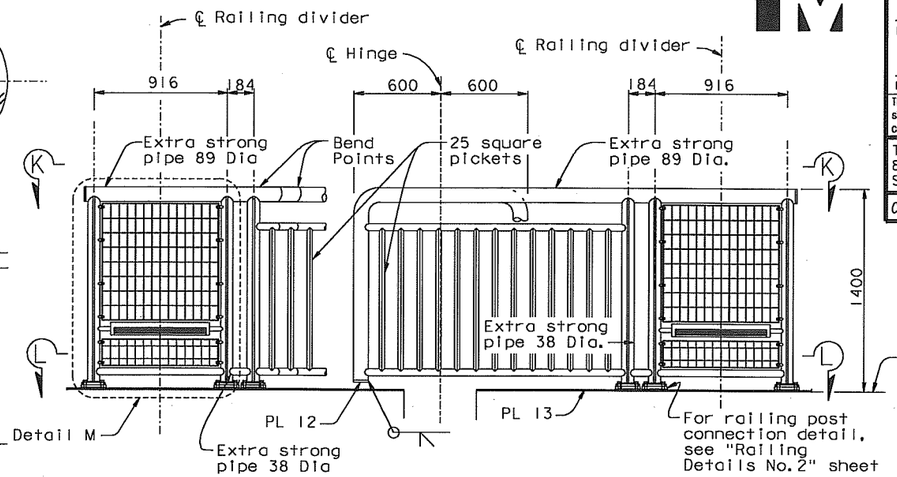

ELEVATION

1:20

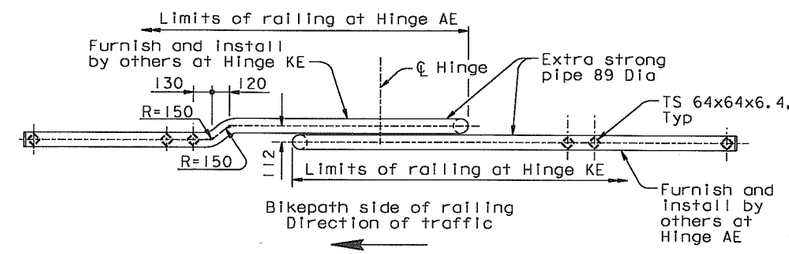

SECTION K-K

1:20

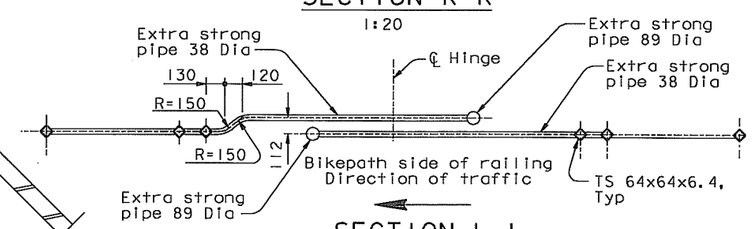

SECTION L-L

1:20

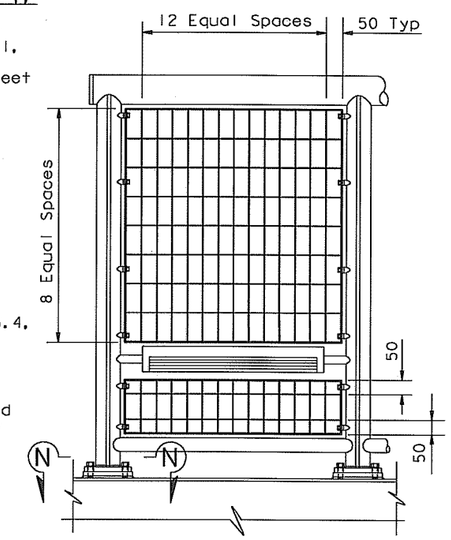

DETAIL M

1:10

RAILING EXPANSION JOINT DETAILS

NOTES:

1. For details not shown, see "Railing Details No. 1", "Railing Details No. 2" sheets and "Railing Details No. 3A".
2. For expansion joint details, see "Hinge K Expansion Joint Details" and "Hinge A Expansion Joint Details" sheets.
3. Railing to match adjoining Skyway Structure, Contract 04-012024.
4. For details of holes on both North and South divider railings, see "Typical Bikepath Lighting" in the "Roadway Plans" and "Railing Details No. 3A" sheets. (5)
5. For Section N-N, see "Railing Details No. 3A" sheet.

CONTRACT CHANGE ORDER NO. 73
SHEET 50 OF 52

REQUESTS FOR INFORMATION NOT ADDRESSED IN THIS CCO REMAIN IN FORCE

MARK	DATE	DESCRIPTIONS	BY	CH'D	CCO#
5	04/01/11	BIKEPATH CONDUIT	TH	JD	73
4	08/20/10	BIKEPATH DETAILS	TH	CC	99
3	04/22/09	BIKEPATH DETAILS	TH	MN	99
2	01/30/09	BIKEPATH DETAILS	TH	MN	99
1	11/26/08	BIKEPATH DETAILS	TH	MN	99

REVISIONS

R. Vallizadeh/V. Toan/Y.L./W.L./F.C.
DESIGN OVERSIGHT
SIGN OFF DATE 04/01/11

Rev. Date: 5-18-98

DESIGN	BY T. Ho	CHECKED	C. Redfield
DETAILS	BY R. Xu	CHECKED	C. Redfield
QUANTITIES	BY G. Baker	CHECKED	K. Cormier

PREPARED FOR THE STATE OF CALIFORNIA DEPARTMENT OF TRANSPORTATION

ALL DIMENSIONS ARE IN MILLIMETERS UNLESS OTHERWISE SHOWN

R. Manzanarez
PROJECT ENGINEER

BRIDGE NO. 34-0006L/R
KILOMETER POST 13.2/13.9

SAN FRANCISCO OAKLAND BAY BRIDGE
EAST SPAN SEISMIC SAFETY PROJECT
SELF-ANCHORED SUSPENSION BRIDGE
(SUPERSTRUCTURE & TOWER)

RAILING DETAILS NO. 3

ORIGINAL SCALE IN MILLIMETERS FOR REDUCED PLANS 0 10 20 30 40 50 60 70 80 90 100

CU 04
EA 0120F1

DISREGARD PRINTS BEARING EARLIER REVISION DATES

REVISION DATES (PRELIMINARY STAGE ONLY) 05/13/99 09/28/99 05/31/01 04/06/02 07/09/02 12/19/02

SHEET 483R5 OF

FILE => I:\bb\04-012001\sas\contract plans and cco\cco\cco#73\6-revision 04-01-11\dgn\akrig06.dgn

USERNAME => DWinrow DATE PLOTTED => 01 APR 2011 TIME PLOTTED => 13:55:37

100 % PS&E

DIST.	COUNTY	ROUTE	KILOMETER POST TOTAL PROJECT	SHEET NO.	TOTAL SHEETS
04	SF	80	13.2/13.9	900S1R5	1204

REGISTERED ENGINEER - CIVIL

11-26-08

PLANS APPROVAL DATE

REGISTERED PROFESSIONAL ENGINEER Tien Hung Ho No. C 43990 Exp. 6/30/11 CIVIL STATE OF CALIFORNIA

The State of California or its officers or agents shall not be responsible for the accuracy or completeness of electronic copies of this plan sheet.

T.Y. LIN / MOFFATT & NICHOL
825 BATTERY STREET
SAN FRANCISCO, CA 94111

Caltrans now has a web site! To get to the web site, go to: http://www.dot.ca.gov

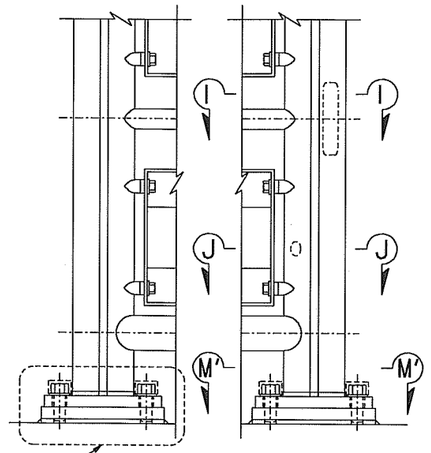

NORTH RAILING ELEVATION (Looking North)
1:5

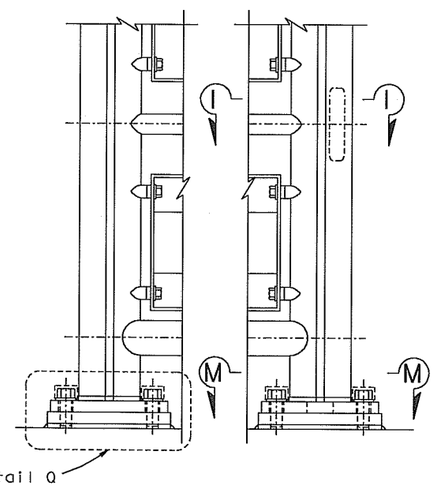

SOUTH RAILING ELEVATION (Looking South)
1:5

5

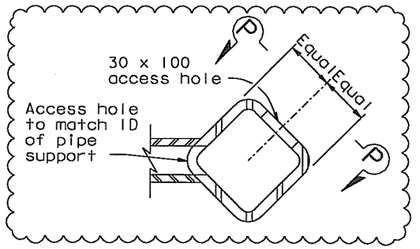

SECTION I-I
1:2

5

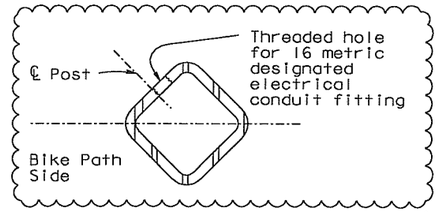

SECTION J-J
1:2

5

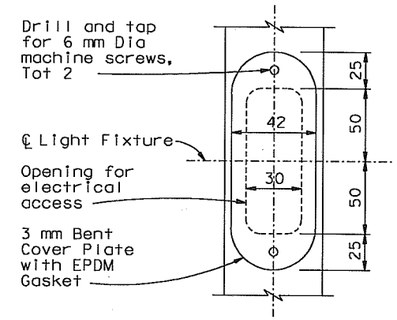

VIEW P-P
1:2

5

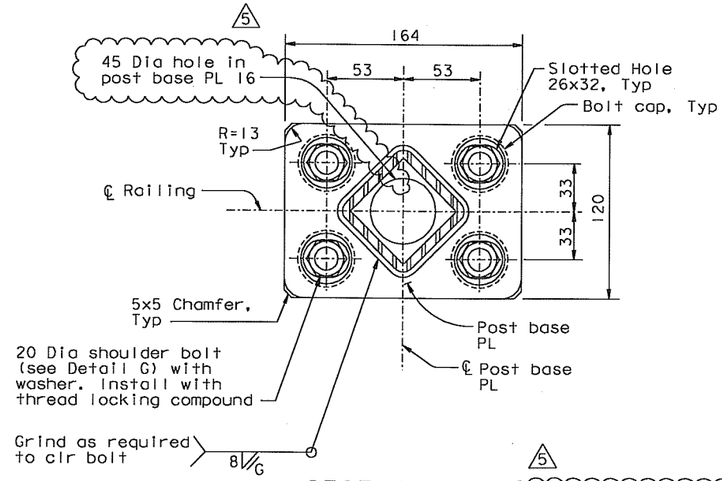

SECTION M-M
1:2

5

(Section M'-M' similar, see Note 3)

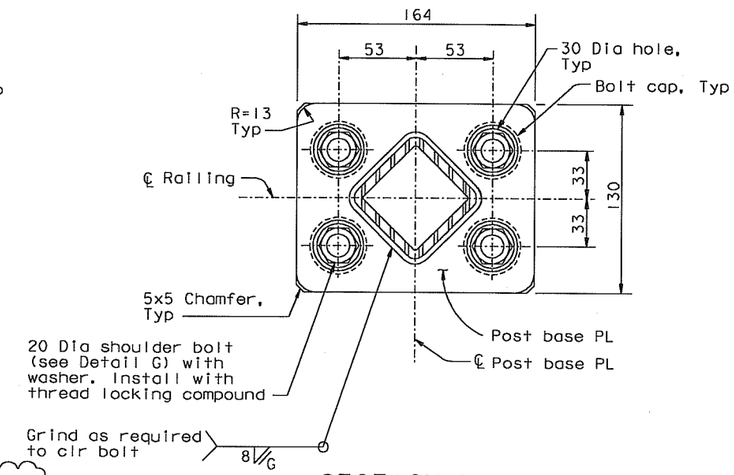

SECTION N-N (See Note 2)
1:2

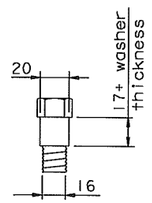

DETAIL G
SHOULDER BOLT
1:2

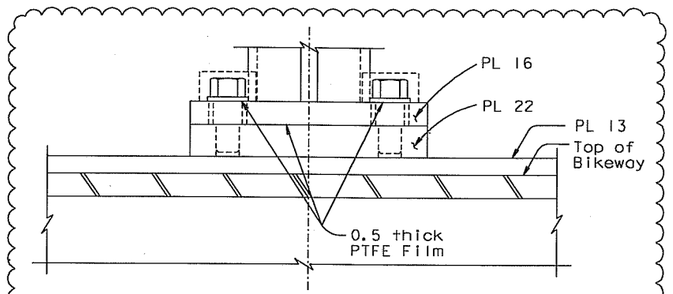

DETAIL Q
1:2

5

NOTES:

5

1. DELETED.
2. Section N-N is applicable to post base PL connections in railing type E at Hinge A.
3. Section M'-M' does not have 45 Dia hole in base PL 16.
4. For details not shown, see "Railing Details No. 3" sheet.

5

ALL DIMENSIONS ARE IN MILLIMETERS UNLESS OTHERWISE SHOWN

CONTRACT CHANGE ORDER NO. 73
SHEET 51 OF 52

REQUESTS FOR INFORMATION NOT ADDRESSED IN THIS CCO REMAIN IN FORCE

MARK	DATE	DESCRIPTIONS	BY	CH'D	CCO#
5	04/01/11	BIKEPATH CONDUIT	TH	JD	73
4	08/20/10	BIKEPATH DETAILS	TH	CC	99
3	09/11/09	BIKEPATH DETAILS	TH	MN	99
2	05/08/09	BIKEPATH DETAILS	TH	MN	99
1	01/30/09	BIKEPATH DETAILS	TH	MN	99
0	11/26/08	BIKEPATH DETAILS	TH	MN	99

REVISIONS

R. Valizadeh/V. Toan/Y.L./W.L./F.C.
DESIGN OVERSIGHT
SIGN OFF DATE 04/01/11

	BY	CHECKED
DESIGN	T. Ho	M. Nader
DETAILS	T. Ho	M. Nader
QUANTITIES	T. Ho	M. Nader

PREPARED FOR THE STATE OF CALIFORNIA DEPARTMENT OF TRANSPORTATION

R. Manzanarez
PROJECT ENGINEER

BRIDGE NO. 34-0006L/R
KILOMETER POST 13.2/13.9

SAN FRANCISCO OAKLAND BAY BRIDGE
EAST SPAN SEISMIC SAFETY PROJECT
SELF-ANCHORED SUSPENSION BRIDGE
(SUPERSTRUCTURE & TOWER)

RAILING DETAILS NO. 3A

Rev. Date: 5-18-98

ORIGINAL SCALE IN MILLIMETERS FOR REDUCED PLANS 0 10 20 30 40 50 60 70 80 90 100

CU 04
EA 0120F1

DISREGARD PRINTS BEARING EARLIER REVISION DATES 11/26/08

REVISION DATES (PRELIMINARY STAGE ONLY)

SHEET 463S1R5 OF

FILE => I:\bb\04-012001\sas\contract plans and cco\cco\cco#73\6-revision 04-01-11\dgn\akrlg06s01.dgn

USERNAME => DWinrow DATE PLOTTED => 01 APR 2011 TIME PLOTTED => 13:57:52

100 % PS&E

DIST.	COUNTY	ROUTE	KILOMETER POST TOTAL PROJECT	SHEET NO.	TOTAL SHEETS
04	SF	80	13.2/13.9	901R4	1204

REGISTERED ENGINEER - CIVIL

12-6-04
PLANS APPROVAL DATE

REGISTERED PROFESSIONAL ENGINEER Tien Hung Ho No. C 43990 Exp. 6/30/11 CIVIL STATE OF CALIFORNIA

The State of California or its officers or agents shall not be responsible for the accuracy or completeness of electronic copies of this plan sheet.

T.Y. LIN / MOFFATT & NICHOL
825 BATTERY STREET
SAN FRANCISCO, CA 94111

Caltrans now has a web site! To get to the web site, go to: http://www.dot.ca.gov

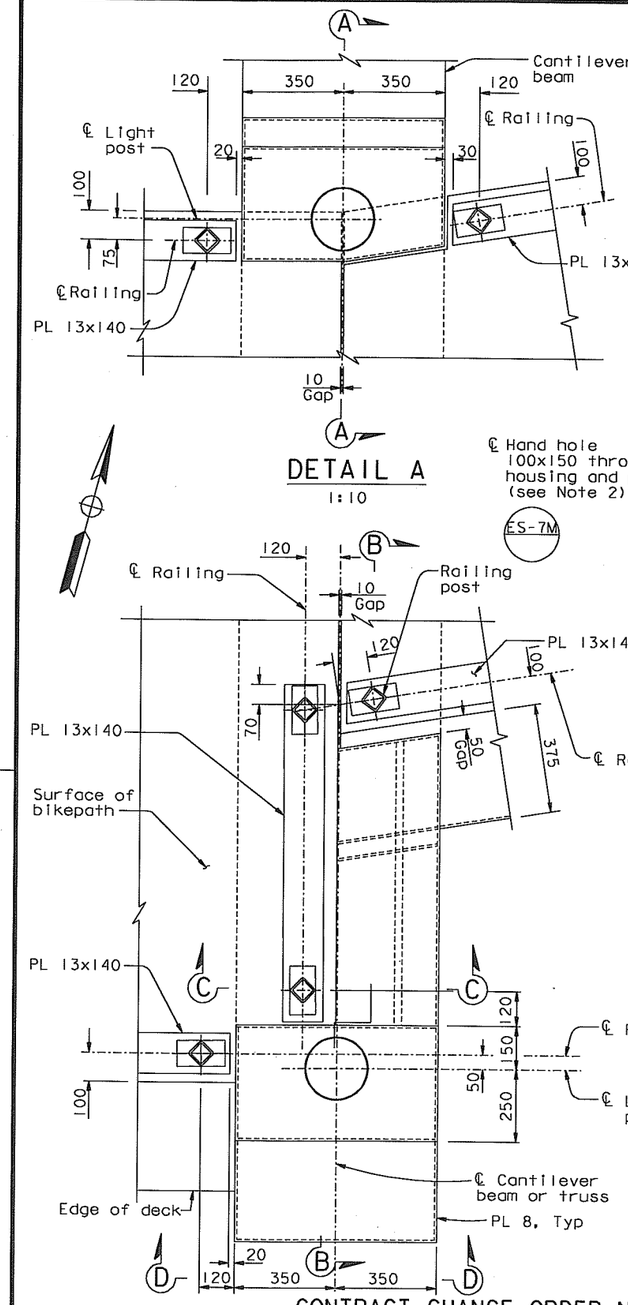

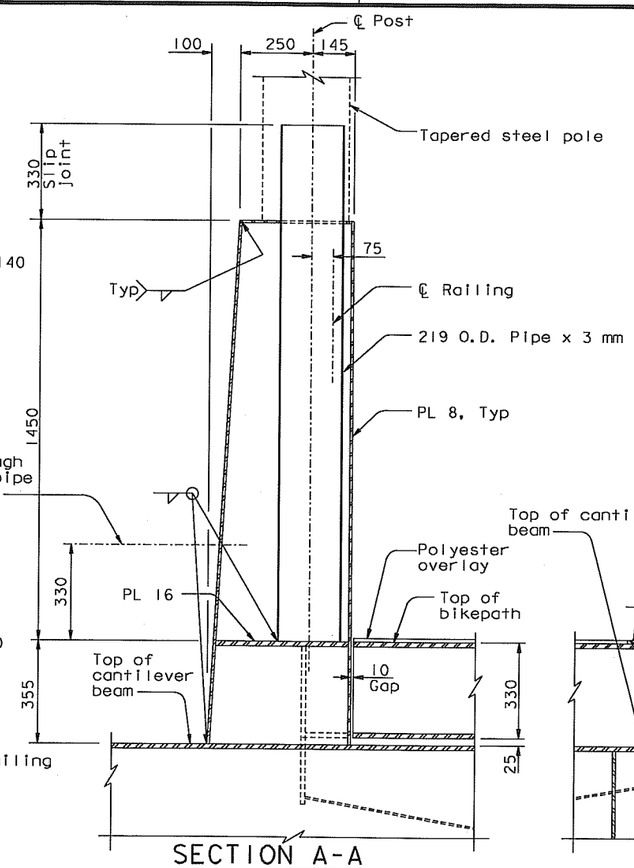

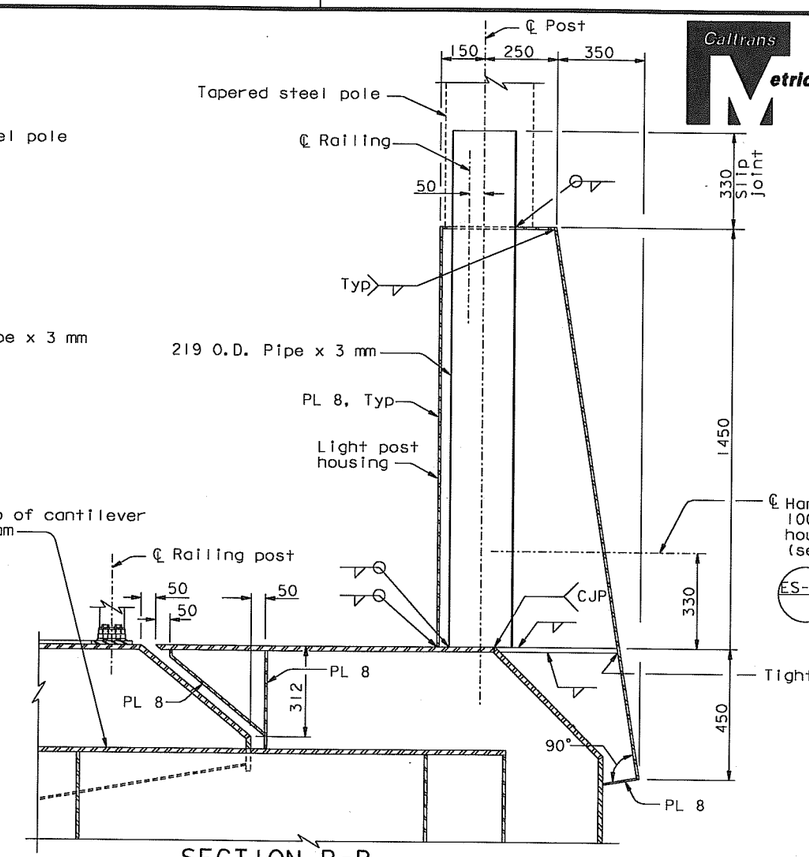

LIGHT POST HOUSING DETAILS AT BELVEDERES

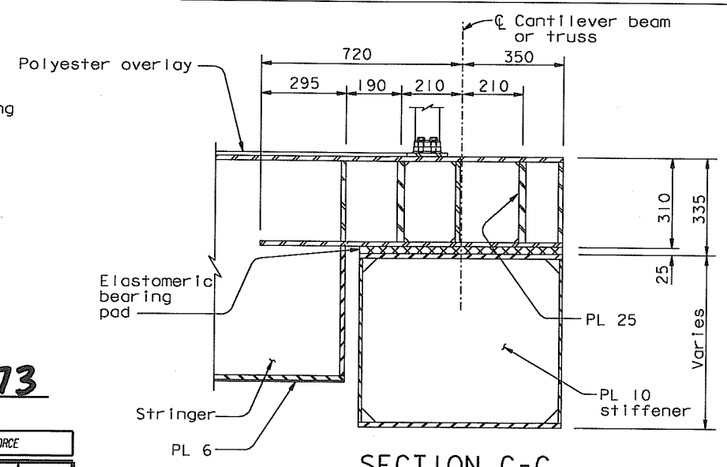

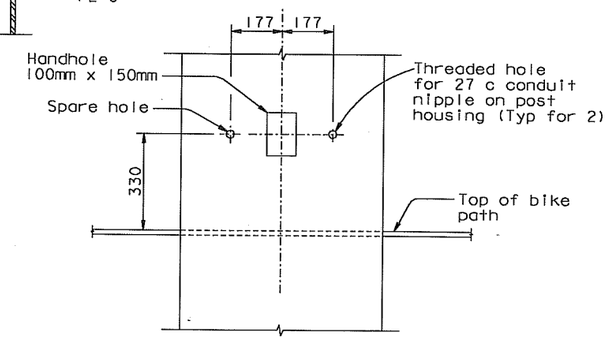

NOTES:

1. For tapered steel pole slip joint details, see "Road Plans".
2. Hand hole cover for exterior opening only. Cover shall be a "Tamper Resistant Handhole Cover" per Caltrans Standard ES-7M. △4

CONTRACT CHANGE ORDER NO. 73
SHEET 52 OF 52

REQUESTS FOR INFORMATION NOT ADDRESSED IN THIS CCO REMAIN IN FORCE

MARK	DATE	DESCRIPTIONS	BY	CH'D	CCO#
4	04/01/11	BIKEPATH CONDUIT	TH	JD	73
3	08/20/10	BIKEPATH DETAILS	CC	TH	99
2	05/28/10	BIKEPATH CONDUIT	AB	TH	73
1	09/25/09	BIKEPATH DETAILS	TH	HT	99

REVISIONS

R. Valizadeh/V. Toan/Y.L./W.L./F.C.
DESIGN OVERSIGHT
SIGN OFF DATE 04/01/11

Rev. Date: 5-18-98

DESIGN	BY T. Ho	CHECKED C. Redfield	
DETAILS	BY R. Xu	CHECKED C. Redfield	
QUANTITIES	BY G. Baker	CHECKED K. Cormier	

PREPARED FOR THE STATE OF CALIFORNIA DEPARTMENT OF TRANSPORTATION

R. Manzanarez
PROJECT ENGINEER

BRIDGE NO. 34-0006L/R
KILOMETER POST 13.2/13.9

ALL DIMENSIONS ARE IN MILLIMETERS UNLESS OTHERWISE SHOWN

SAN FRANCISCO OAKLAND BAY BRIDGE
EAST SPAN SEISMIC SAFETY PROJECT
SELF-ANCHORED SUSPENSION BRIDGE
(SUPERSTRUCTURE & TOWER)

RAILING DETAILS NO. 4

ORIGINAL SCALE IN MILLIMETERS FOR REDUCED PLANS 0 10 20 30 40 50 60 70 80 90 100

CU 04
EA 0120F1

DISREGARD PRINTS BEARING EARLIER REVISION DATES

REVISION DATES (PRELIMINARY STAGE ONLY) 05/15/99 08/06/99 05/31/01 01/08/02 07/31/02 12/19/02

SHEET 484R4 OF

FILE => L:\BB\04-012001\SAS\Contract Plans and CCO\CCO\CCO#73\6-Revision 04-01-11\DGN\akrlg07.dgn

USERNAME => DWinrow DATE PLOTTED => 01 APR 2011 TIME PLOTTED => 15:14:38

100 % PS&E