DIST.	COUNTY	ROUTE	KILOMETER POST TOTAL PROJECT	SHEET NO.	TOTAL SHEETS
04	SF	80	13.2/13.9	814R4	1204

REGISTERED ENGINEER - CIVIL

12-6-04
PLANS APPROVAL DATE

REGISTERED PROFESSIONAL ENGINEER Marwan N. Nader No. C 054426 Exp. 12/31/11 CIVIL STATE OF CALIFORNIA

The State of California or its officers or agents shall not be responsible for the accuracy or completeness of electronic copies of this plan sheet.

T.Y. LIN / MOFFATT & NICHOL
825 BATTERY STREET
SAN FRANCISCO, CA 94111

Caltrans now has a web site! To get to the web site, go to: http://www.dot.ca.gov

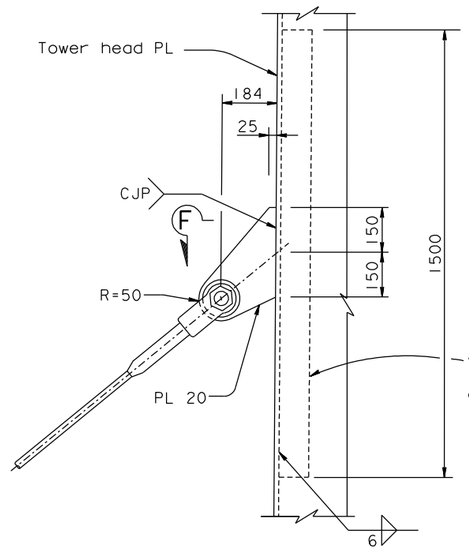

DETAIL D (See Note 2)
1:10

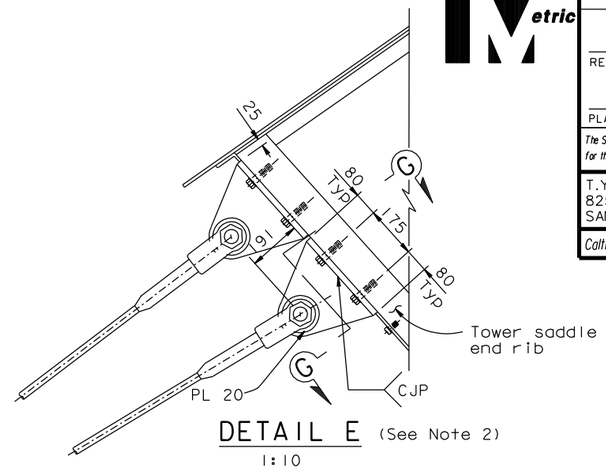

DETAIL E (See Note 2)
1:10

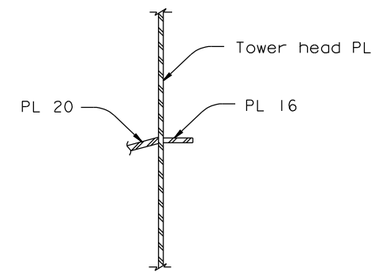

SECTION F-F
1:10

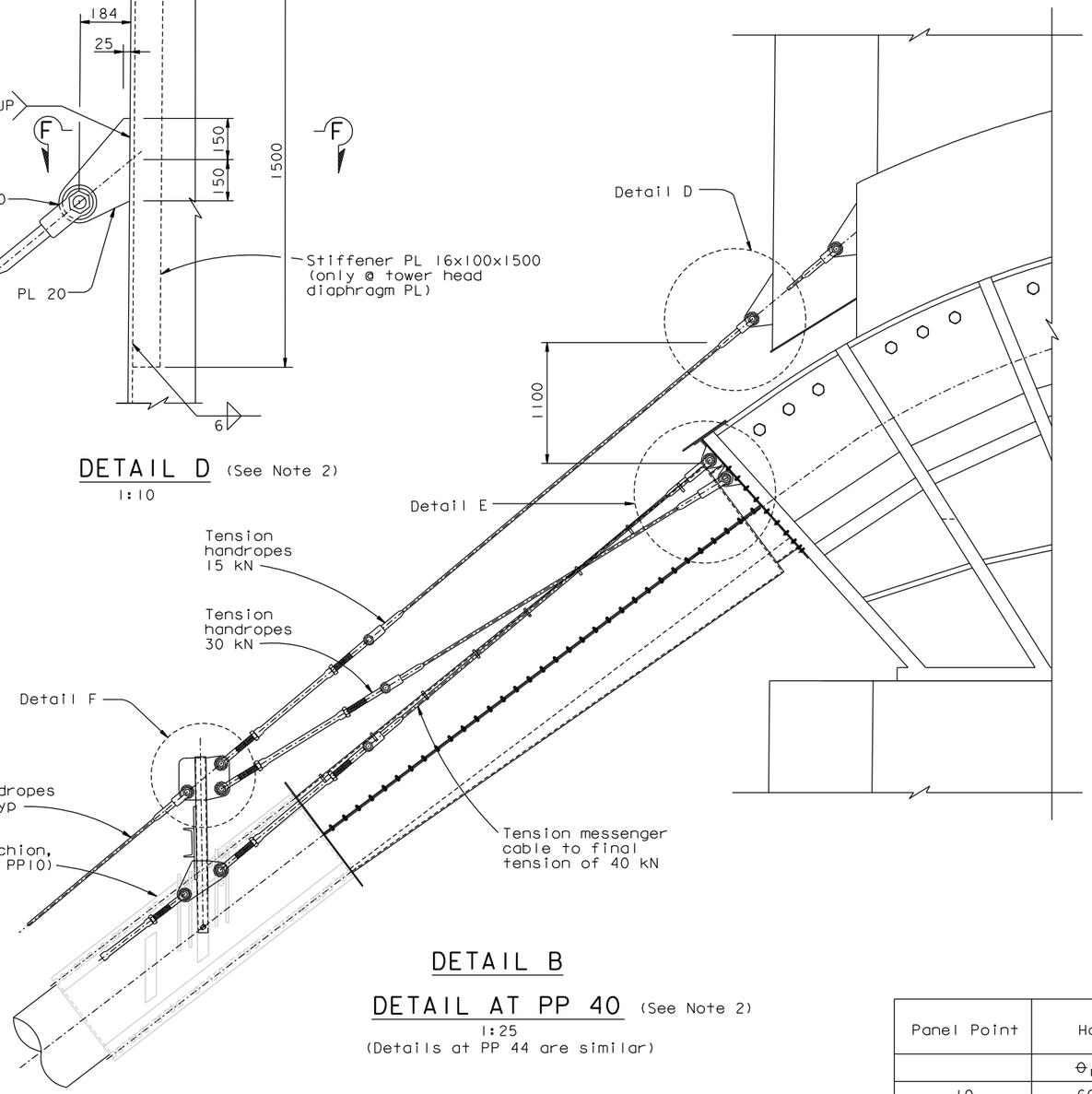

DETAIL B

DETAIL AT PP 40 (See Note 2)
1:25
(Details at PP 44 are similar)

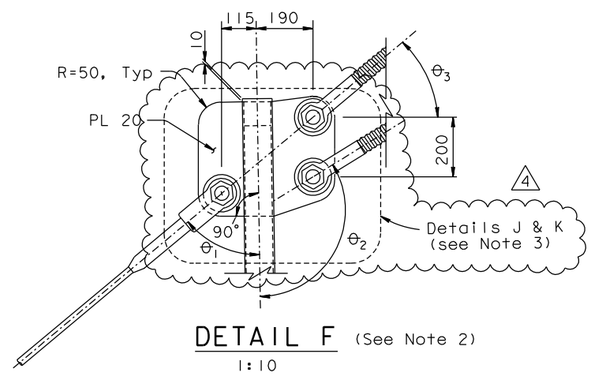

DETAIL F (See Note 2)
1:10

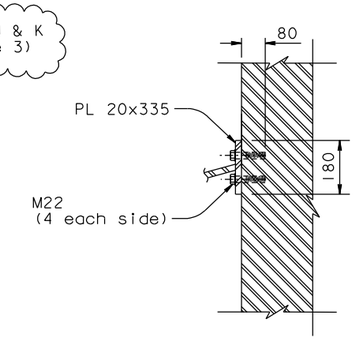

SECTION G-G
1:10

Panel Point	Handrope Bracket Angles		
	θ_1	θ_2	θ_3
10	60°	116°	NA
40	54°	116°	35°
44	60°	112°	30°
102	78°	96°	NA

NOTES:

1. For anchor stanchion, see "Cable Handrope Details No. 2" sheet.
2. For details not shown see "Cable Handrope Details No. 2" sheet. Connect the handrope bracket to the 1st stiffener from the ℄ bridge of tower head shim PL D.
3. (4) For Details J & K, see "Cable Handrope Details No. 3A" sheet.

CONTRACT CHANGE ORDER NO. _____
SHEET ____ OF ____

REQUESTS FOR INFORMATION NOT ADDRESSED IN THIS CCO REMAIN IN FORCE

MARK	DATE	DESCRIPTIONS	BY	CH'D	CCO#
4	06/22/11	CABLE ELECTRICAL	TH	MN	72
3	10/22/10	TOWER HEAD DETAILS	NV	MN	93
2	08/15/08	CABLE ELECTRICAL	TH	MN	72
1	04/16/07	CABLE SYSTEM	GB	MN	37

REVISIONS

R. Valizadeh/V. Toan/Y.L./W.L./F.C.
DESIGN OVERSIGHT
SIGN OFF DATE 06/22/11

	BY	CHECKED
DESIGN	M. Nader	T. McMeans
DETAILS	G. Baker	T. McMeans
QUANTITIES	G. Baker	C. Mibelli

PREPARED FOR THE STATE OF CALIFORNIA DEPARTMENT OF TRANSPORTATION

R. Manzanarez
PROJECT ENGINEER

ALL DIMENSIONS ARE IN MILLIMETERS UNLESS OTHERWISE SHOWN

BRIDGE NO. 34-0006L/R
KILOMETER POST 13.2/13.9

SAN FRANCISCO OAKLAND BAY BRIDGE
EAST SPAN SEISMIC SAFETY PROJECT
SELF-ANCHORED SUSPENSION BRIDGE
(SUPERSTRUCTURE & TOWER)

CABLE HANDROPE DETAILS NO. 3

Rev. Date: 5-18-98

ORIGINAL SCALE IN MILLIMETERS FOR REDUCED PLANS 0 10 20 30 40 50 60 70 80 90 100

CU 04
EA 0120F1

DISREGARD PRINTS BEARING EARLIER REVISION DATES

REVISION DATES (PRELIMINARY STAGE ONLY): 08/02/99 05/31/01 04/08/02 07/01/02 12/18/02 09/06/04

SHEET 397R4 OF

FILE => I:\bb\04-012001\sas\contract plans and cco\cco\cco#72\9-revision 06-22-11\dgn\agshr09.dgn

USERNAME => PTom DATE PLOTTED => 22 JUN 2011 TIME PLOTTED => 10:19:15

100 % PS&E