DIST.	COUNTY	ROUTE	KILOMETER POST TOTAL PROJECT	SHEET NO.	TOTAL SHEETS
04	SF	80	13.2/13.9	813S5	1204

REGISTERED ENGINEER - CIVIL

06-22-11
PLANS APPROVAL DATE

REGISTERED PROFESSIONAL ENGINEER Tien Hung Ho No. C 43990 Exp. 06/30/13 CIVIL STATE OF CALIFORNIA

The State of California or its officers or agents shall not be responsible for the accuracy or completeness of electronic copies of this plan sheet.

T.Y. LIN / MOFFATT & NICHOL
825 BATTERY STREET
SAN FRANCISCO, CA 94111

Caltrans now has a web site! To get to the web site, go to: http://www.dot.ca.gov

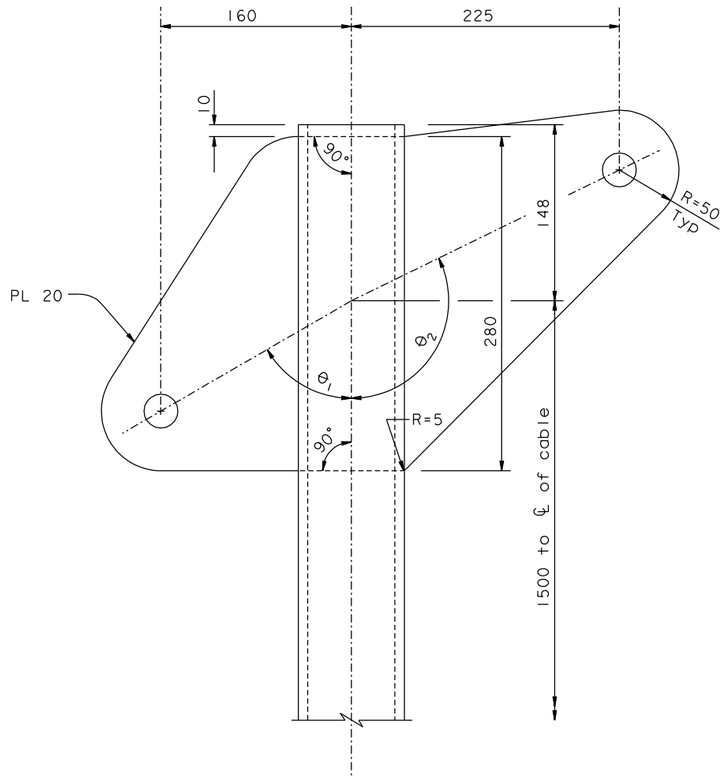

DETAIL G (PP 10 - 2 Cables)
1:2.5

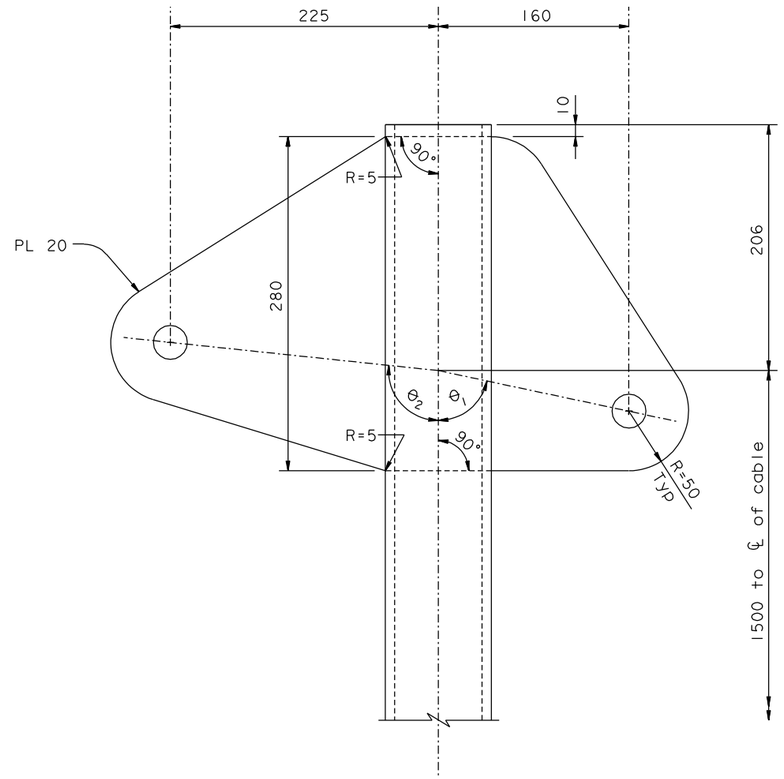

DETAIL H (PP 102 - 2 Cables)
1:2.5

NOTES:

1. For hand rope bracket angles, see "Cable Handrope Details No.3" sheet.

100 % PS&E

CONTRACT CHANGE ORDER NO. _____
SHEET ____ OF ____

REQUESTS FOR INFORMATION NOT ADDRESSED IN THIS CCO REMAIN IN FORCE

ALL DIMENSIONS ARE IN MILLIMETERS UNLESS OTHERWISE SHOWN

R. Valizadeh/V. Toan/Y.L./W.L./F.C.
DESIGN OVERSIGHT
SIGN OFF DATE 06/22/11

MARK	DATE	DESCRIPTIONS	BY	CH'D	CCO#
0	06/22/11	CABLE ELECTRICAL	TH	MN	72

REVISIONS

DESIGN	BY T. Ho	CHECKED M. Nader	
DETAILS	BY T. Ho	CHECKED M. Nader	
QUANTITIES	BY T. Ho	CHECKED M. Nader	

PREPARED FOR THE STATE OF CALIFORNIA DEPARTMENT OF TRANSPORTATION

R. Manzanarez
PROJECT ENGINEER

BRIDGE NO. 34-0006L/R
KILOMETER POST 13.2/13.9

SAN FRANCISCO OAKLAND BAY BRIDGE
EAST SPAN SEISMIC SAFETY PROJECT
SELF-ANCHORED SUSPENSION BRIDGE
(SUPERSTRUCTURE & TOWER)

CABLE HANDROPE DETAILS NO. 2E

Rev. Date: 5-18-98

ORIGINAL SCALE IN MILLIMETERS FOR REDUCED PLANS 0 10 20 30 40 50 60 70 80 90 100

CU 04
EA 0120F1

DISREGARD PRINTS BEARING EARLIER REVISION DATES

REVISION DATES (PRELIMINARY STAGE ONLY): 06/22/11

SHEET 396S5 OF

FILE => I:\bb\04-012001\sas\contract plans and cco\cco\cco#72\9-revision 06-22-11\dgn\agshr08e.dgn

USERNAME => PTom DATE PLOTTED => 22 JUN 2011 TIME PLOTTED: 18:38