DIST.	COUNTY	ROUTE	KILOMETER POST TOTAL PROJECT	SHEET NO.	TOTAL SHEETS
04	SF	80	13.2/13.9	813S4	1204

Caltrans Metric

REGISTERED ENGINEER - CIVIL

8-15-08
PLANS APPROVAL DATE

REGISTERED PROFESSIONAL ENGINEER Tien Hung Ho No. C 43990 Exp. 06/30/09 CIVIL STATE OF CALIFORNIA

The State of California or its officers or agents shall not be responsible for the accuracy or completeness of electronic copies of this plan sheet.

T.Y. LIN / MOFFATT & NICHOL
825 BATTERY STREET
SAN FRANCISCO, CA 94111

Caltrans now has a web site! To get to the web site, go to: http://www.dot.ca.gov

REQUESTS FOR INFORMATION NOT ADDRESSED IN THIS CCO REMAIN IN FORCE

MARK	DATE	DESCRIPTIONS	BY	CH'D	CCO#
0	09/12/08	CABLE ELECTRICAL	TH	AS	72

REVISIONS

CONTRACT CHANGE ORDER NO. ____
SHEET ___ OF ___

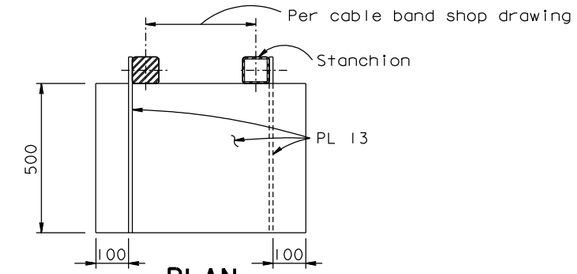

PLAN

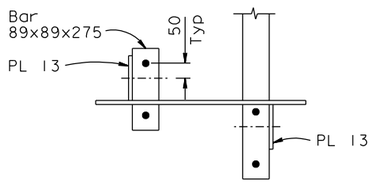

ELEVATION

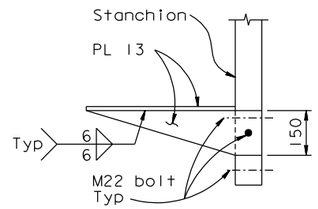

SECTION C-C

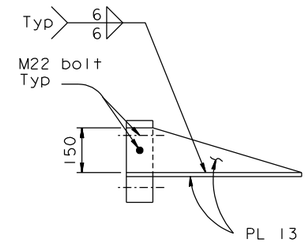

SECTION D-D

STRONG MOTION SENSOR ENCLOSURE PLATFORM

1:10 (UNO)

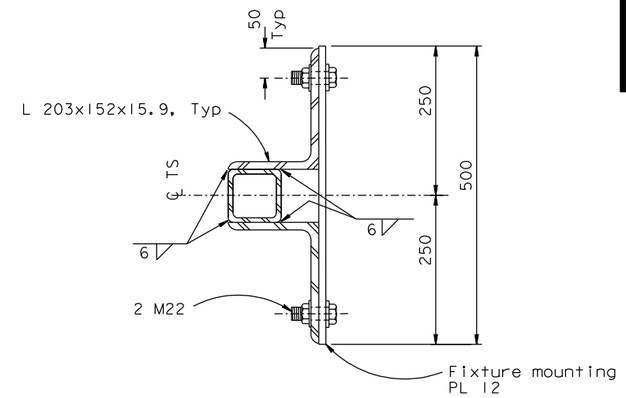

VIEW B-B

1:5

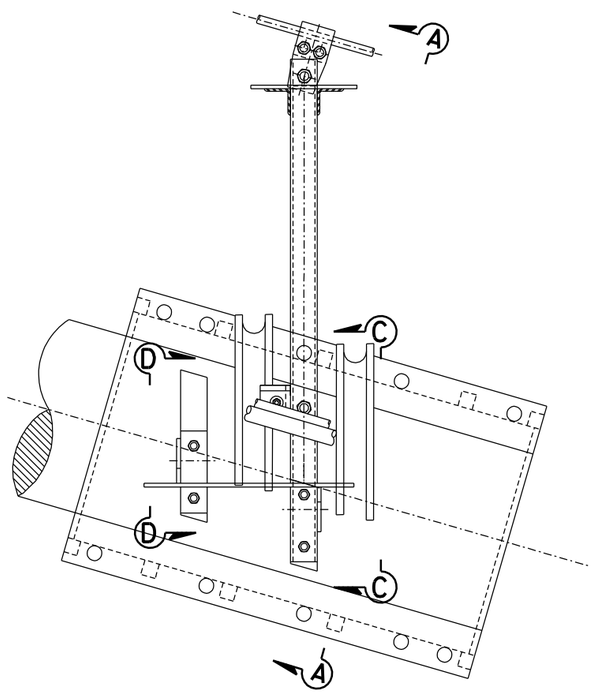

CABLE BAND B5

1:10

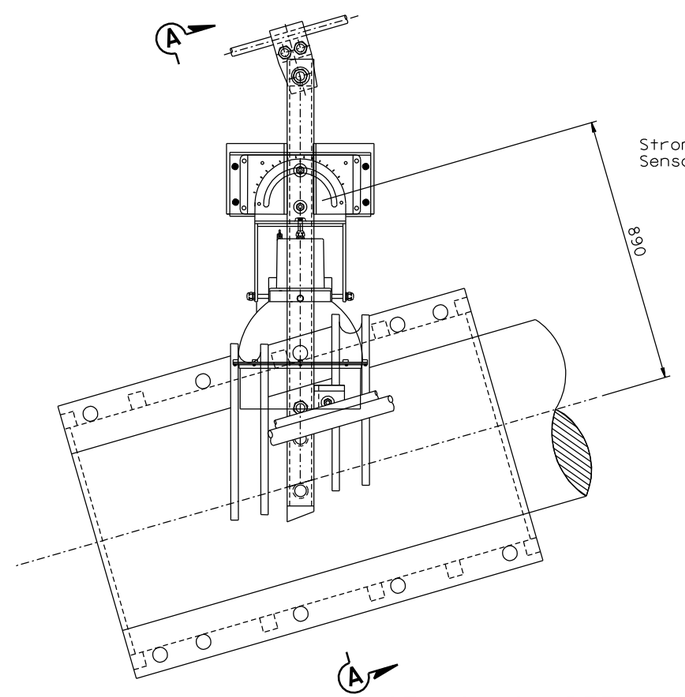

STANCHION DETAIL AT PANEL POINT 68

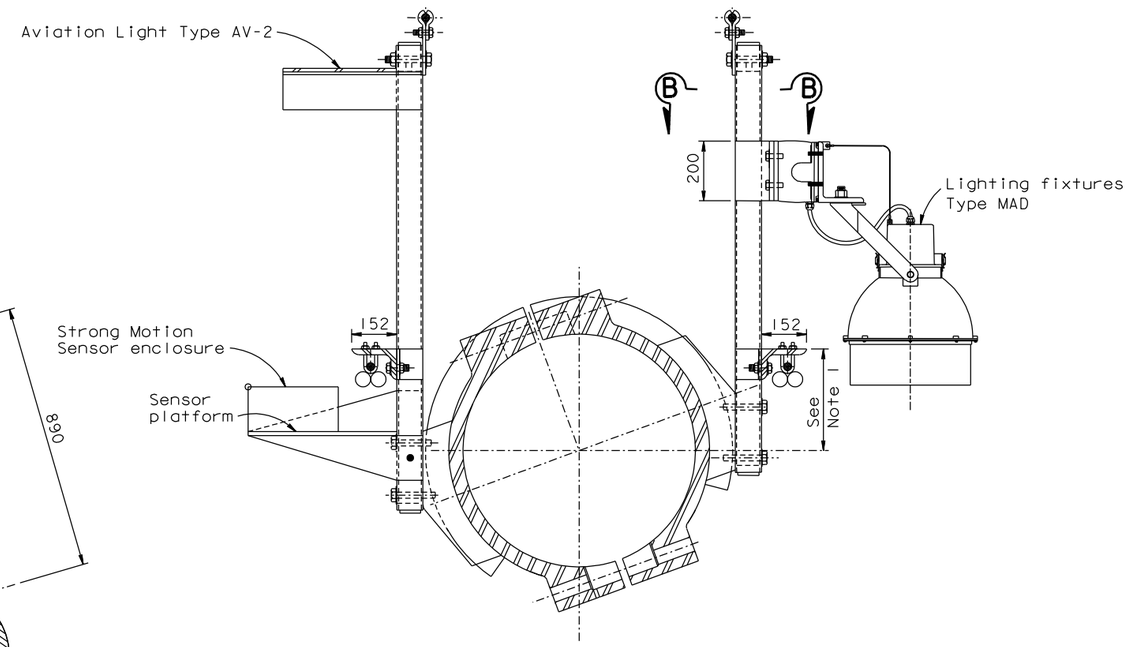

SECTION A-A

1:10

NOTES:

1. For additional notes, see "Cable Handrope Details No. 2B" sheet.
2. Strong Motion Sensor enclosure will be drilled and tapped in field. For mounting details, see "Road Plans".

ALL DIMENSIONS ARE IN MILLIMETERS UNLESS OTHERWISE SHOWN

R. Valizadeh/V. Toan/Y.L./W.L./F.C.
DESIGN OVERSIGHT
Roya Valizadeh / Vong Toan / Y. Liu
SIGN OFF DATE 09/12/08

	BY	CHECKED
DESIGN	T. Ho	A. Sanjines
DETAILS	T. Ho	A. Sanjines
QUANTITIES	T. Ho	A. Sanjines

PREPARED FOR THE STATE OF CALIFORNIA DEPARTMENT OF TRANSPORTATION

R. Manzanarez
PROJECT ENGINEER

BRIDGE NO. 34-0006L/R
KILOMETER POST 13.2/13.9

SAN FRANCISCO OAKLAND BAY BRIDGE
EAST SPAN SEISMIC SAFETY PROJECT
SELF-ANCHORED SUSPENSION BRIDGE (SUPERSTRUCTURE & TOWER)

CABLE HANDROPE DETAILS NO. 2D

Rev. Date: 5-18-98

ORIGINAL SCALE IN MILLIMETERS FOR REDUCED PLANS 0 10 20 30 40 50 60 70 80 90 100

CU 04
EA 0120F1

DISREGARD PRINTS BEARING EARLIER REVISION DATES → 08/15/08

REVISION DATES (PRELIMINARY STAGE ONLY)

SHEET 396S4 OF

FILE => L:\BB\04-012001\SAS\Contract Plans and CCO\CCO\In Progress\CCO#72\Revision 09-12-08\DGN\agshr08c.dgn

USERNAME => vignatovsky DATE PLOTTED => 12 SEP 2008 TIME PLOTTED => 08:28:07