DIST.	COUNTY	ROUTE	KILOMETER POST TOTAL PROJECT	SHEET NO.	TOTAL SHEETS
04	SF	80	13.2/13.9	809R1	1204

Caltrans Metric

REGISTERED ENGINEER - CIVIL

12-6-04
PLANS APPROVAL DATE

REGISTERED PROFESSIONAL ENGINEER Marwan N. Nader No. C 054426 Exp. 12/31/09 CIVIL STATE OF CALIFORNIA

The State of California or its officers or agents shall not be responsible for the accuracy or completeness of electronic copies of this plan sheet.

T.Y. LIN / MOFFATT & NICHOL
825 BATTERY STREET
SAN FRANCISCO, CA 94111

Caltrans now has a web site! To get to the web site, go to: http://www.dot.ca.gov

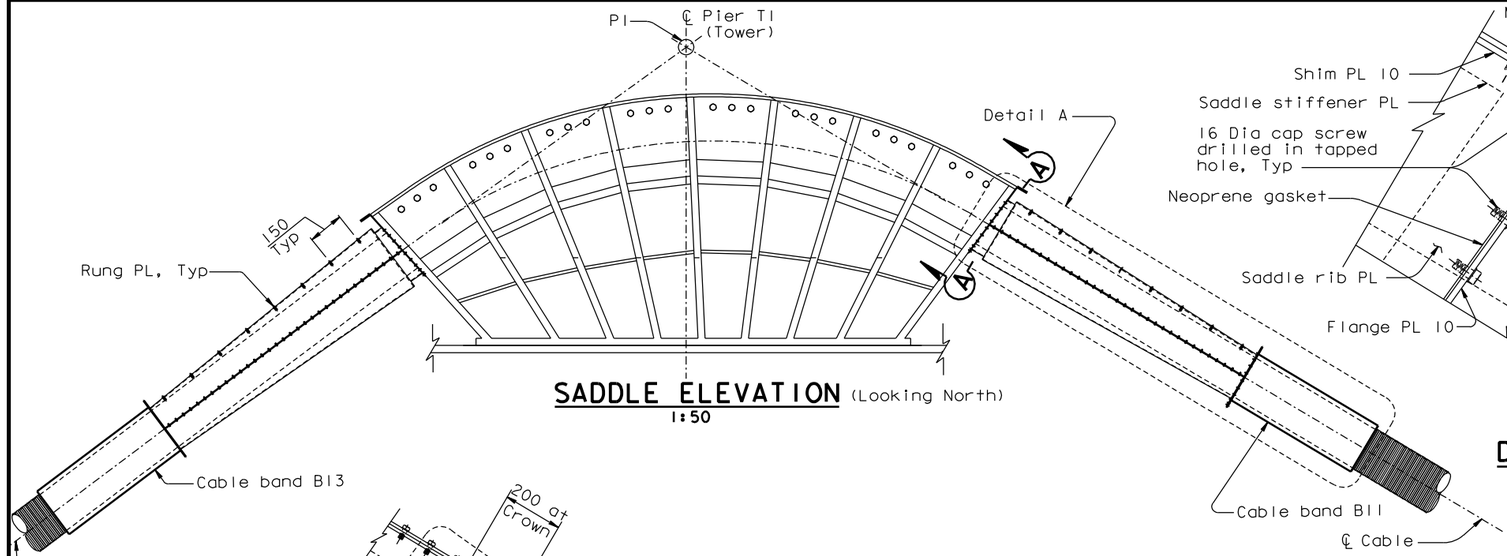

SADDLE ELEVATION (Looking North)
1:50

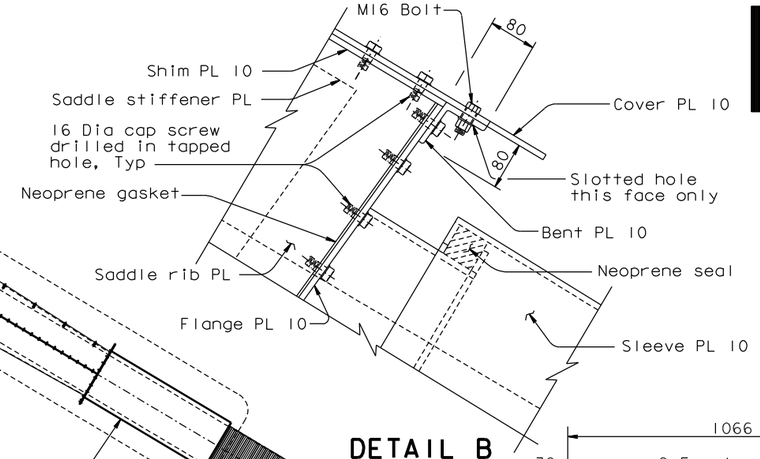

DETAIL B
1:10

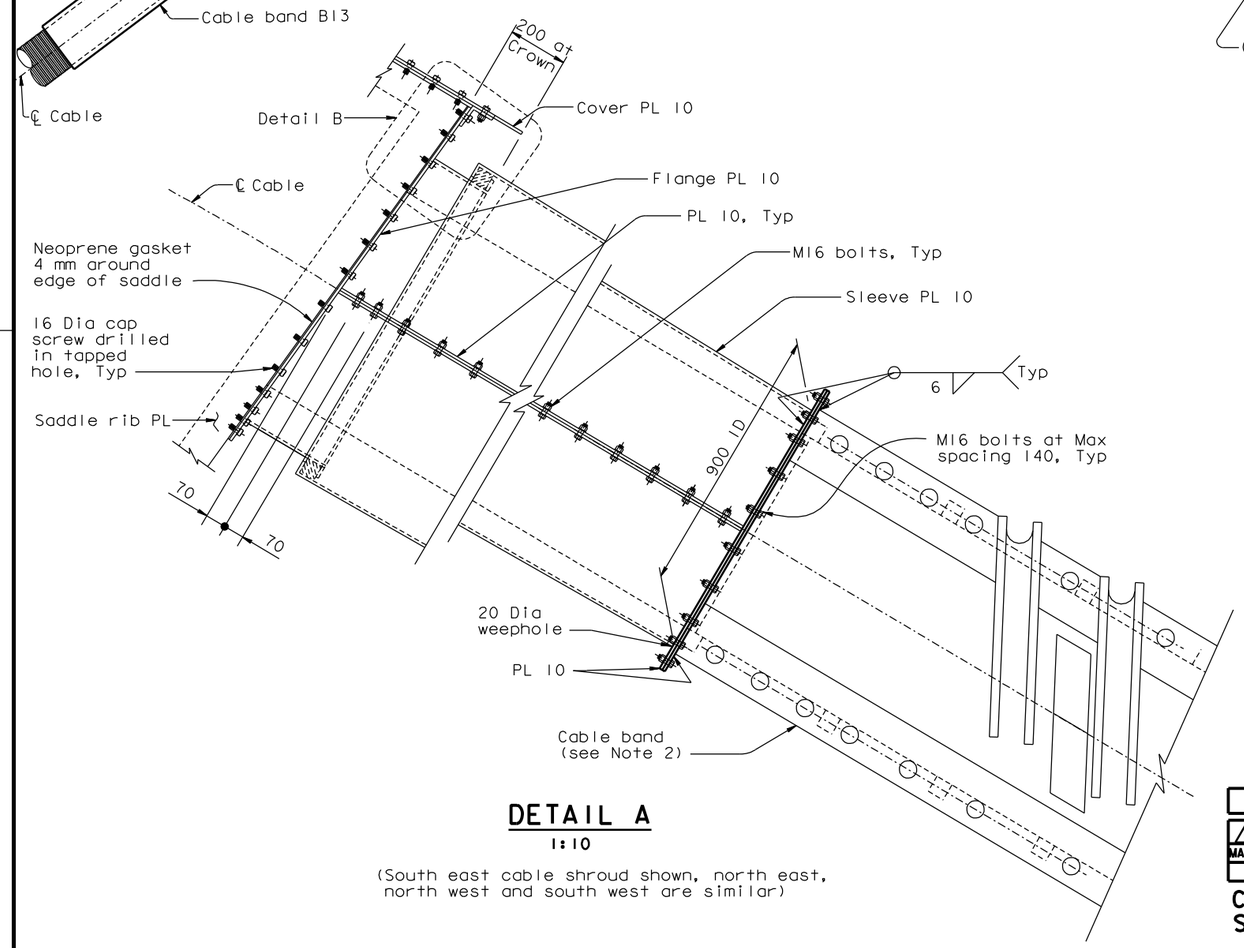

DETAIL A
1:10

(South east cable shroud shown, north east, north west and south west are similar)

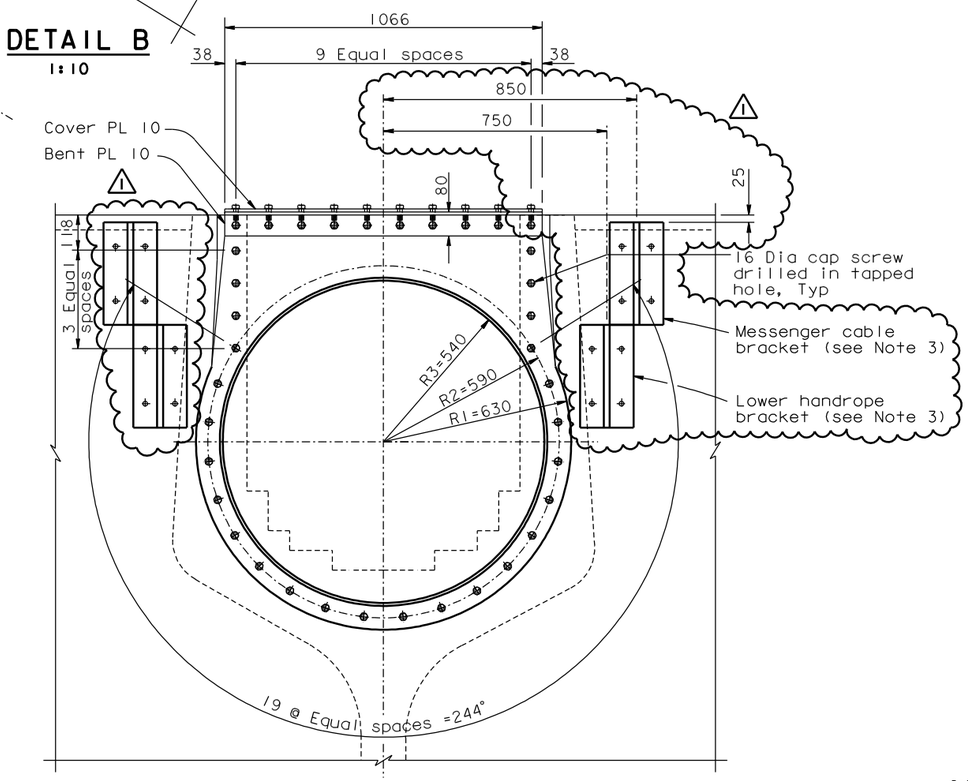

SECTION A-A
1:10
(Cable not shown, for clarity)

NOTES:

1. For cable shroud details not shown, see "East Cable Shroud Details" sheets.
2. For details of cable bands B11 and B13, see "Cable Band Details" sheets.
3. For messenger cable and handrope bracket details, see "Cable Handrope Details No.3" sheet.

REQUESTS FOR INFORMATION NOT ADDRESSED IN THIS CCO REMAIN IN FORCE					
1	08/15/08	CABLE ELECTRICAL	TH	MN	72
MARK	DATE	DESCRIPTIONS	BY	CH'D	CCO#
		REVISIONS			

CONTRACT CHANGE ORDER NO. ____
SHEET ___ OF ___

ALL DIMENSIONS ARE IN MILLIMETERS UNLESS OTHERWISE SHOWN

R. Valizadeh/V. Toan/Y.L./W.L./F.C.
DESIGN OVERSIGHT
SIGN OFF DATE 08/15/08

	BY	CHECKED
DESIGN	M. Nader	T. McMeans
DETAILS	L. Rus	T. McMeans
QUANTITIES	D. Harrison	Y. Zhang

PREPARED FOR THE STATE OF CALIFORNIA DEPARTMENT OF TRANSPORTATION

R. Manzanarez
PROJECT ENGINEER

BRIDGE NO. 34-0006L/R
KILOMETER POST 13.2/13.9

SAN FRANCISCO OAKLAND BAY BRIDGE
EAST SPAN SEISMIC SAFETY PROJECT
SELF-ANCHORED SUSPENSION BRIDGE
(SUPERSTRUCTURE & TOWER)

TOWER CABLE SHROUD DETAILS

Rev. Date: 5-18-98

ORIGINAL SCALE IN MILLIMETERS FOR REDUCED PLANS 0 10 20 30 40 50 60 70 80 90 100

CU 04
EA 0120F1

DISREGARD PRINTS BEARING EARLIER REVISION DATES

REVISION DATES (PRELIMINARY STAGE ONLY): 05/15/99 08/02/99 05/31/01 04/08/02 07/01/02 12/19/02 09/06/04

SHEET 392R1 OF

FILE => I:\bb\04-0120I\sas\contract plans and cco\cco\in progress\cco#72\revision 08-15-08\dgn\agshr03.dgn

USERNAME => vignatovs DATE PLOTTED => 15 AUG 2008 TIME PLOTTED => 14:39:52

100% PS&E