DIST.	COUNTY	ROUTE	KILOMETER POST TOTAL PROJECT	SHEET NO.	TOTAL SHEETS
04	SF	80	13.2/13.9	752R2	1204

George Baker
REGISTERED ENGINEER - CIVIL
12-6-04
PLANS APPROVAL DATE

REGISTERED PROFESSIONAL ENGINEER George S. Baker No. C 57112 Exp. 12/31/05 CIVIL STATE OF CALIFORNIA

The State of California or its officers or agents shall not be responsible for the accuracy or completeness of electronic copies of this plan sheet.

Caltrans Metric

T.Y. LIN / MOFFATT & NICHOL
825 BATTERY STREET
SAN FRANCISCO, CA 94111

Caltrans now has a web site! To get to the web site, go to: http://www.dot.ca.gov

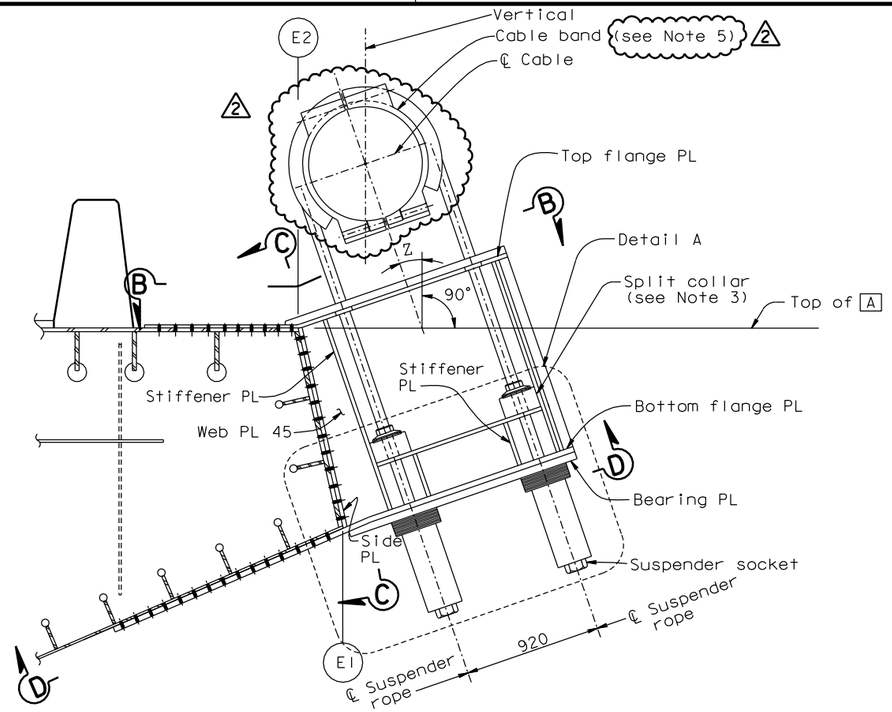

ELEVATION
SUSPENDER BRACKET AT PP 104, 106, 108, 110
1:20

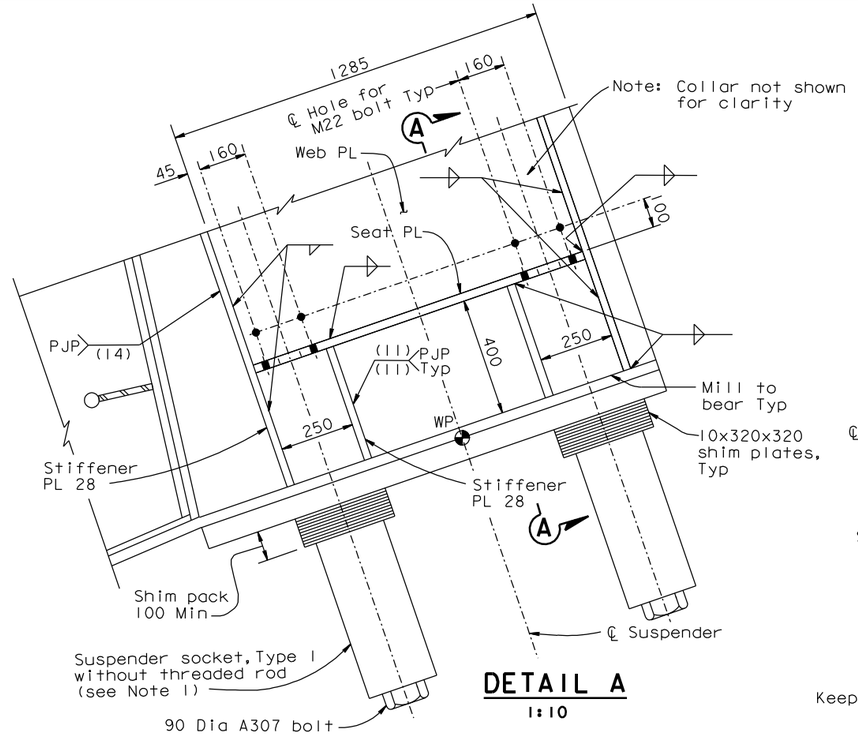

DETAIL A
1:10

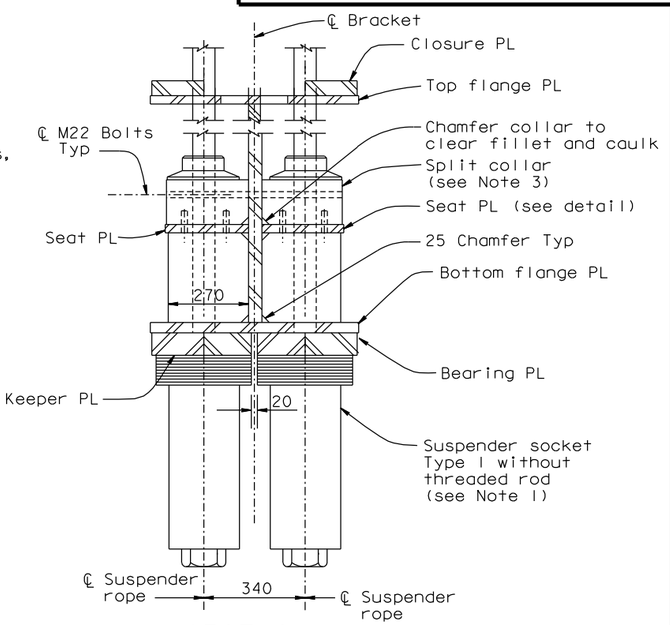

SECTION A-A
1:10

LEGEND:

3 Girder stiffener Type 3

C Girder face C

NOTES:

1. Threaded rod may be used for erection. After installation of suspender socket, ends shall be sealed with 90 Dia A307 bolts.
2. For details not shown, see "Suspender Bracket Details No.1" through "Suspender Bracket Details No.3" sheets.
3. For split collar details, see "Suspender Bracket Details No.5" sheet.
4. The Contractor shall consider variation in roadway grade in his details.
5. For cable band details see "Cable Band Details" and "Cable Handrope Details" sheets.

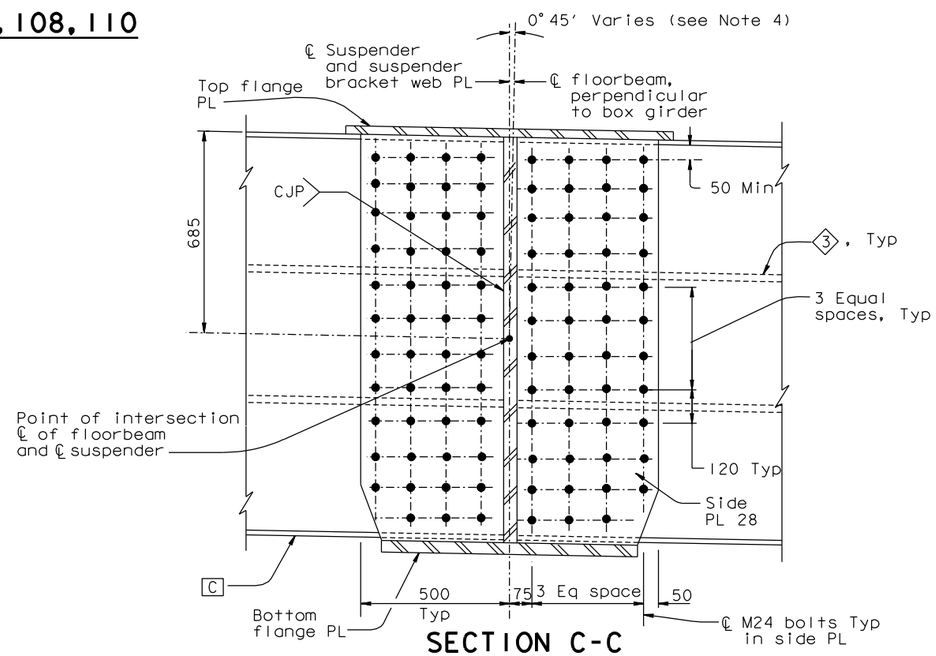

SECTION C-C
1:10

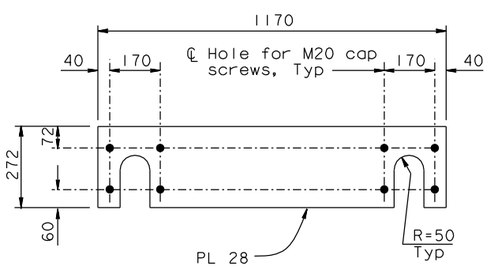

SEAT PLATE DETAIL
1:10

REQUESTS FOR INFORMATION NOT ADDRESSED IN THIS CCO REMAIN IN FORCE

MARK	DATE	DESCRIPTIONS	BY	CH'D	CCO#
2	08/15/08	CABLE ELECTRICAL	GB	DT	72
1	04/16/07	CABLE SYSTEM	GB	DT	37

REVISIONS

CONTRACT CHANGE ORDER NO. ____
SHEET ___ OF ___

REGISTERED PROFESSIONAL ENGINEER Daniel J. Turner No. C 65033 Exp. 06/30/09 CIVIL STATE OF CALIFORNIA

FOR REVISIONS ONLY

ALL DIMENSIONS ARE IN MILLIMETERS UNLESS OTHERWISE SHOWN

SAN FRANCISCO OAKLAND BAY BRIDGE
EAST SPAN SEISMIC SAFETY PROJECT
SELF-ANCHORED SUSPENSION BRIDGE
(SUPERSTRUCTURE & TOWER)

SUSPENDER BRACKET DETAILS NO. 6

R. Valizadeh/V. Toan/Y.L./W.L./F.C.
DESIGN OVERSIGHT
Roya Valizadeh / Vong Toan / Y. Liu
SIGN OFF DATE 08/15/08

DESIGN	BY G. Baker	CHECKED	T. McMeans
DETAILS	BY S. Camo	CHECKED	P. Ritchie
QUANTITIES	BY C. Mauch	CHECKED	C. Mibelli

PREPARED FOR THE STATE OF CALIFORNIA DEPARTMENT OF TRANSPORTATION

R. Manzanarez
PROJECT ENGINEER

BRIDGE NO. 34-0006L/R
KILOMETER POST 13.2/13.9

CU 04
EA 0120F1

DISREGARD PRINTS BEARING EARLIER REVISION DATES

REVISION DATES (PRELIMINARY STAGE ONLY) 01/15/99 05/25/99 05/24/01 05/06/02 07/24/02 12/18/02 11/13/05

SHEET 335R2 OF

Rev. Date: 5-18-98

ORIGINAL SCALE IN MILLIMETERS FOR REDUCED PLANS 0 10 20 30 40 50 60 70 80 90 100

FILE => I:\bb\04-01200I\sas\contract plans and cco\cco\in progress\cco#72\revision 08-15-08\dgn\agsadl3.dgn

USERNAME => vignatovs DATE PLOTTED => 15 AUG 2008 TIME PLOTTED => 14:38:38

100% PS&E