DIST.	COUNTY	ROUTE	KILOMETER POST TOTAL PROJECT	SHEET NO.	TOTAL SHEETS
04	SF	80	13.2/13.9	888BR3	1204

REGISTERED ENGINEER - CIVIL

12-9-05

PLANS APPROVAL DATE

REGISTERED PROFESSIONAL ENGINEER Marwan N. Nader No. C 054426 Exp. 12/31/11 CIVIL STATE OF CALIFORNIA

The State of California or its officers or agents shall not be responsible for the accuracy or completeness of electronic copies of this plan sheet.

T.Y. LIN / MOFFATT & NICHOL
825 BATTERY STREET
SAN FRANCISCO, CA 94111

Caltrans now has a web site! To get to the web site, go to: http://www.dot.ca.gov

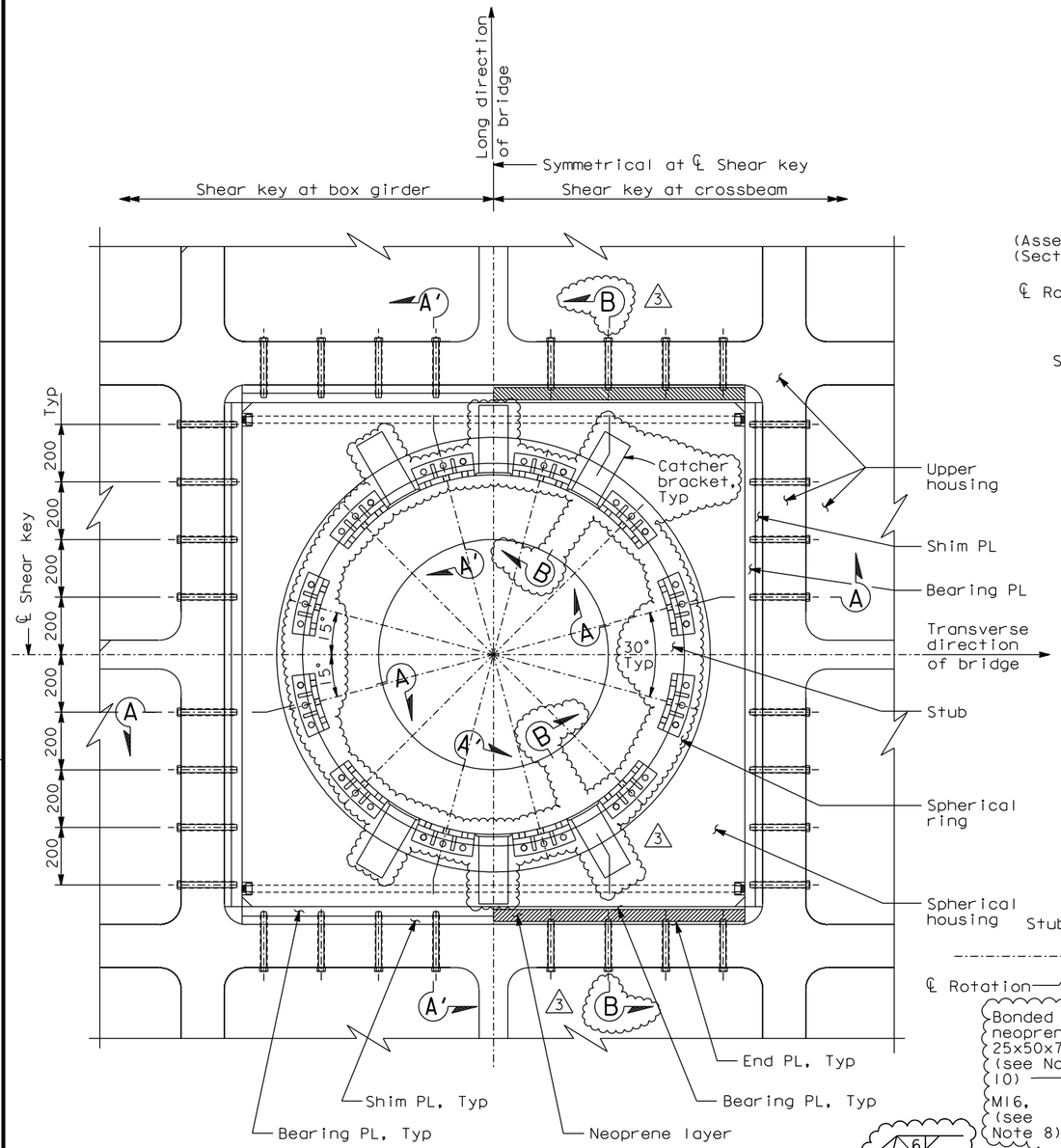

BUSHING CONNECTION DETAIL (Looking up)
1:10

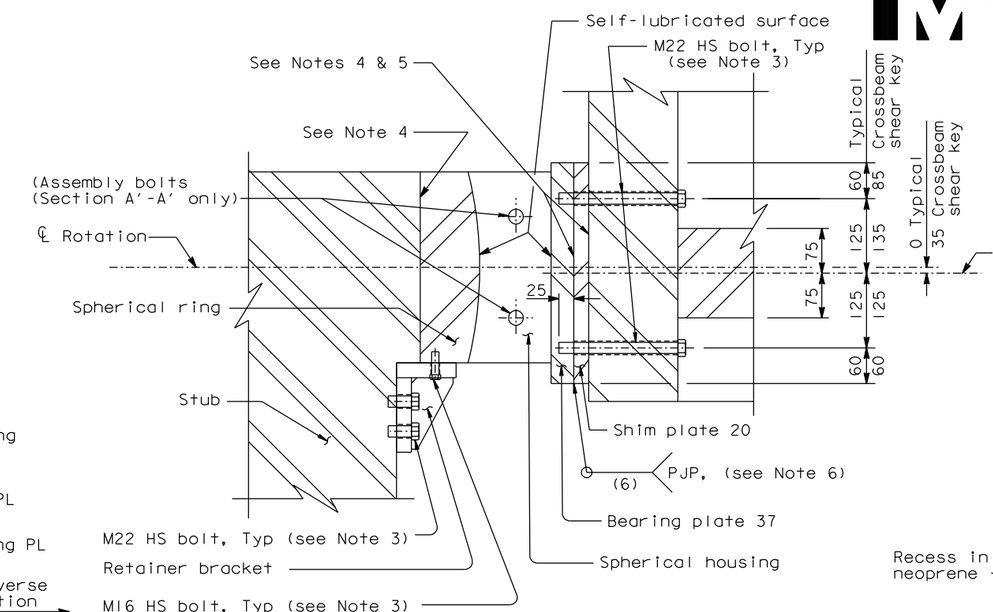

SECTION A-A (Section A'-A' similar)
1:5

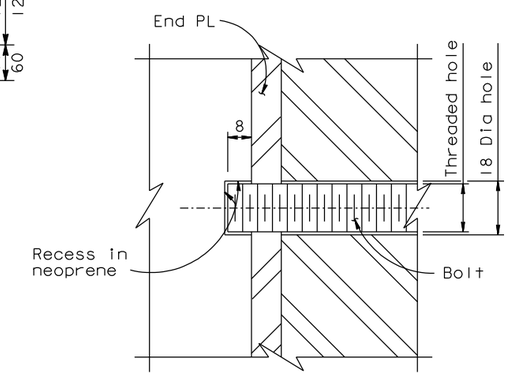

DETAIL A
1:1

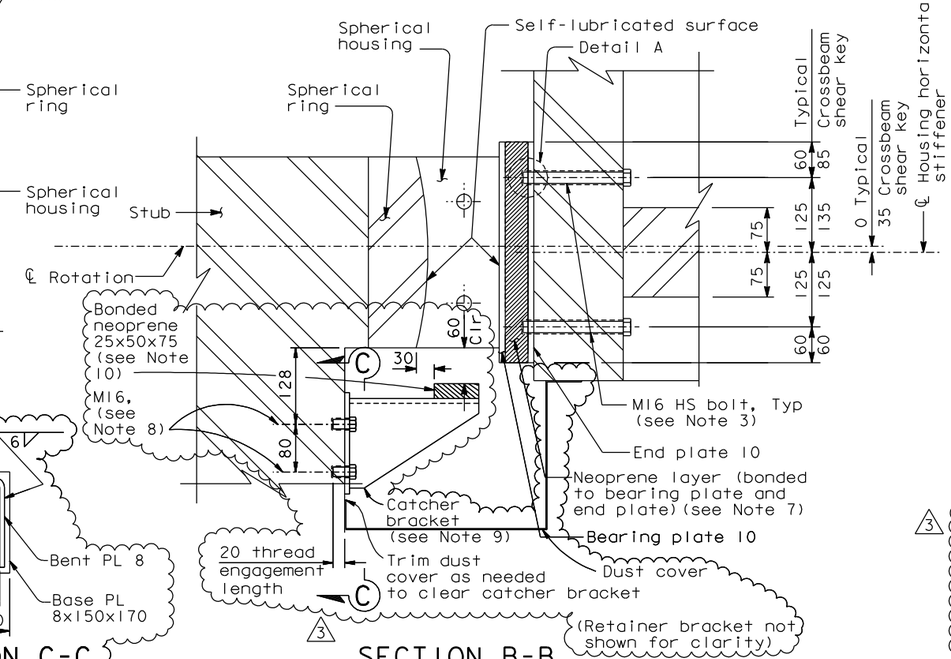

SECTION B-B
1:5

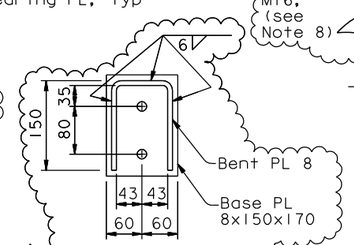

SECTION C-C
1:5

NOTES:

1. The mating surfaces of the spherical ring and bearing plate shall be 5 mm thick stainless steel weld overlay conforming to the requirements of A240, Type 316.
2. The lubricant shall be self-lubricated.
3. High strength bolts shall be installed snug-tight only.
4. Contact steel surfaces shall comply with Class A surface (slip coefficient 0.33).
5. The Contractor shall ensure the flatness requirements are met at the faying surfaces.
6. Welding shall be made after field measurement and actual shim plate thickness has been determined.
7. Field measurement shall be made to determine actual thickness of neoprene layer.
8. Bolts shall be installed snug-tight plus 1/4 turn.
9. Catcher brackets shall be installed for shear keys at crossbeam only.
10. Neoprene pad shall satisfy the requirements of Caltrans Standard Specifications Section 51-1.14.

CONTRACT CHANGE ORDER NO. ____
SHEET ___ OF ___

REQUESTS FOR INFORMATION NOT ADDRESSED IN THIS CCO REMAIN IN FORCE

MARK	DATE	DESCRIPTIONS	BY	CH'D	CCO#
3	12/30/10	E2 SHEAR KEY CATCHER BRACKETS	MN	NV	71S1
2	02/13/09	E2 CROSS BEAM	MN	NV	71
1	09/26/08	E2 CROSS BEAM	MN	NV	71

REVISIONS

R. Valizadeh/V. Toan/Y.L./W.L./F.C.
DESIGN OVERSIGHT
SIGN OFF DATE 12/30/10

	BY	CHECKED
DESIGN	M. Nader	L. Rus
DETAILS	A. Sanjines	J. Leventini
QUANTITIES	A. Sanjines	J. Leventini

PREPARED FOR THE STATE OF CALIFORNIA DEPARTMENT OF TRANSPORTATION

R. Manzanarez
PROJECT ENGINEER

BRIDGE NO. 34-0006L/R
KILOMETER POST 13.2/13.9

ALL DIMENSIONS ARE IN MILLIMETERS UNLESS OTHERWISE SHOWN

SAN FRANCISCO OAKLAND BAY BRIDGE
EAST SPAN SEISMIC SAFETY PROJECT
SELF-ANCHORED SUSPENSION BRIDGE
(SUPERSTRUCTURE & TOWER)

PIER E2 SHEAR KEY DETAILS NO. 4

Rev. Date: 5-18-98

ORIGINAL SCALE IN MILLIMETERS FOR REDUCED PLANS 0 10 20 30 40 50 60 70 80 90 100

CU 04
EA 0120F1

DISREGARD PRINTS BEARING EARLIER REVISION DATES 12/07/05

REVISION DATES (PRELIMINARY STAGE ONLY)

SHEET 471BR3 OF

FILE => L:\BB\04-012001\SAS\Contract Plans and CCO\CCO\CCO#71S1\2-Update 12-30-10\DGN\aksrd01d.dgn

USERNAME => arivera DATE PLOTTED => 29 DEC 2010 TIME PLOTTED => 10:00:06

100 % PS&E