DIST.	COUNTY	ROUTE	KILOMETER POST TOTAL PROJECT	SHEET NO.	TOTAL SHEETS
04	SF	80	13.2/13.9	888R1	1204

Caltrans Metric

REGISTERED ENGINEER - CIVIL

12-6-04

PLANS APPROVAL DATE

REGISTERED PROFESSIONAL ENGINEER Marwan N. Nader No. C 054426 Exp. 12/31/09 CIVIL STATE OF CALIFORNIA

The State of California or its officers or agents shall not be responsible for the accuracy or completeness of electronic copies of this plan sheet.

T.Y. LIN / MOFFATT & NICHOL
825 BATTERY STREET
SAN FRANCISCO, CA 94111

Caltrans now has a web site! To get to the web site, go to: http://www.dot.ca.gov

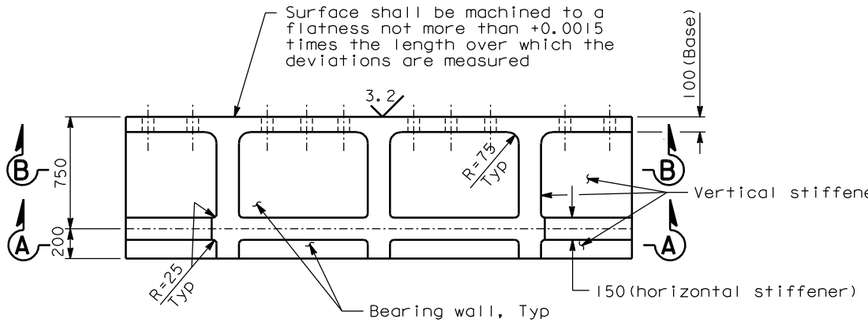

ELEVATION - SHEAR KEY HOUSING

1:20

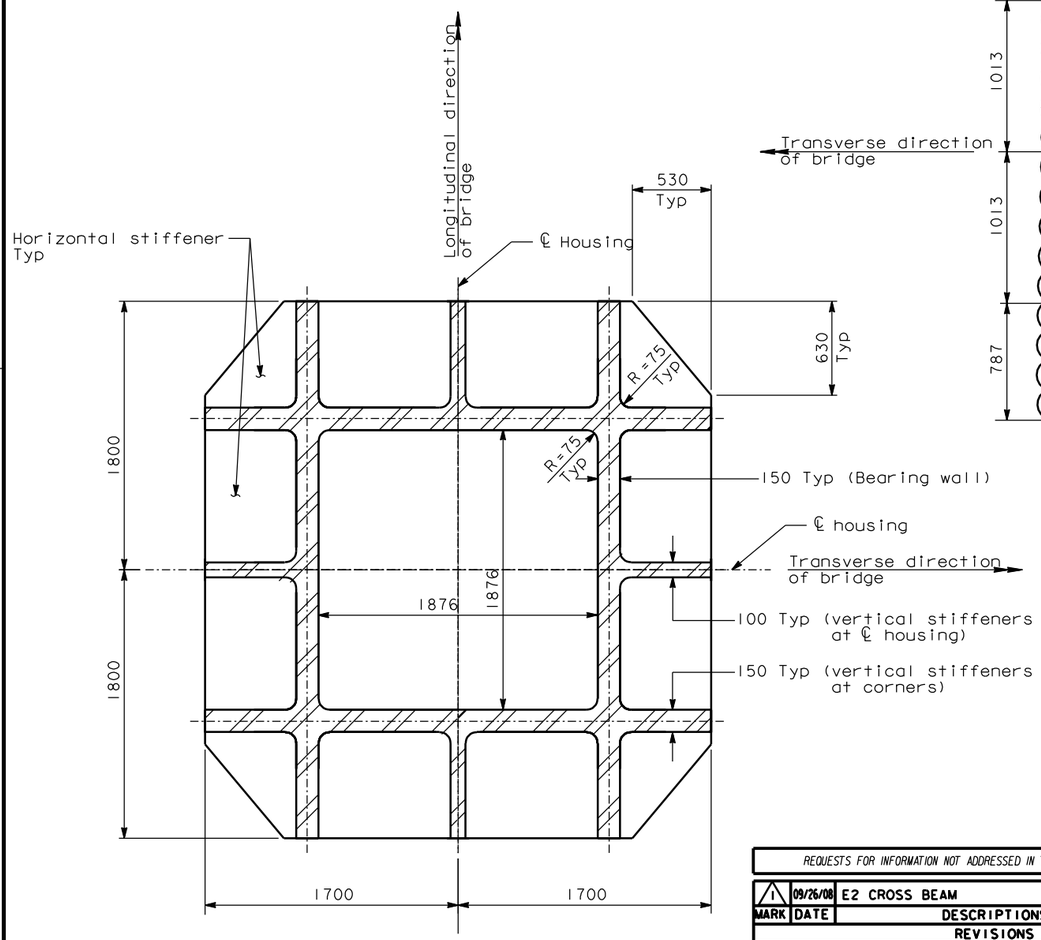

SECTION A-A

1:20

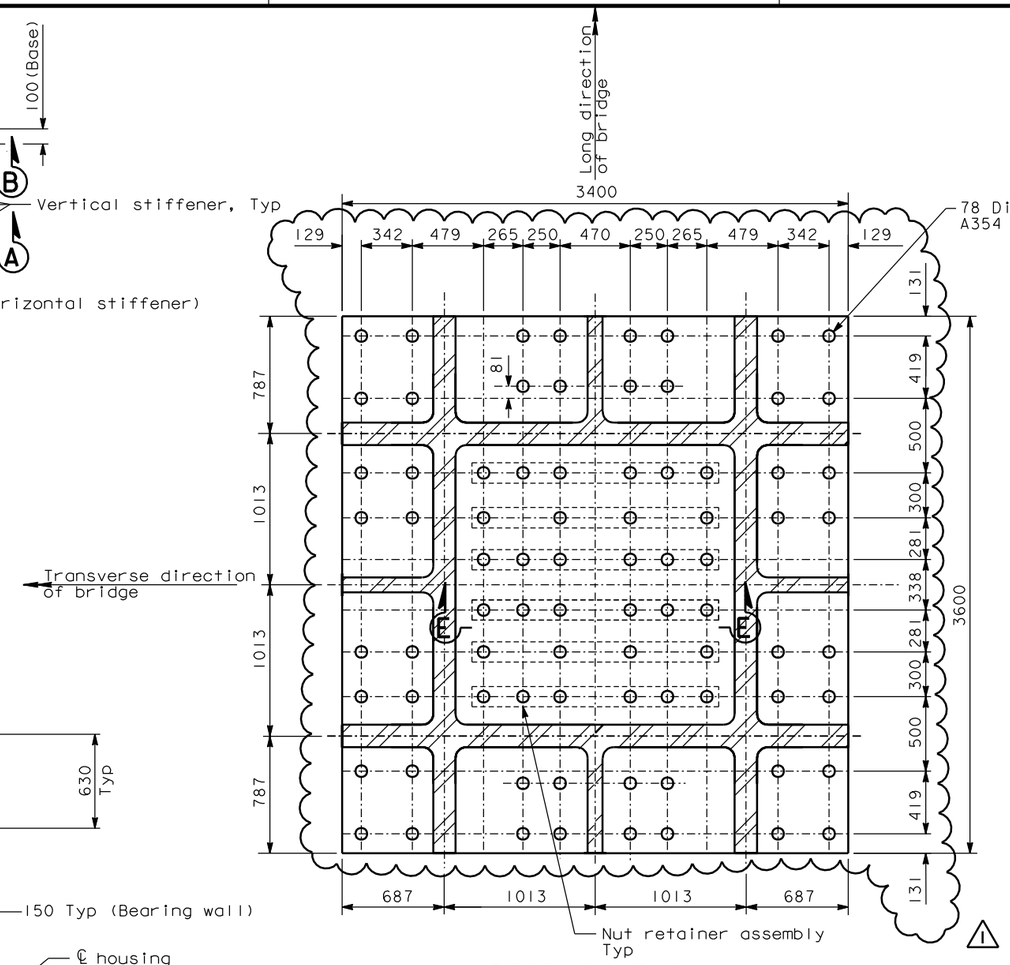

SECTION B-B

(For details not shown see Section A-A)

1:20

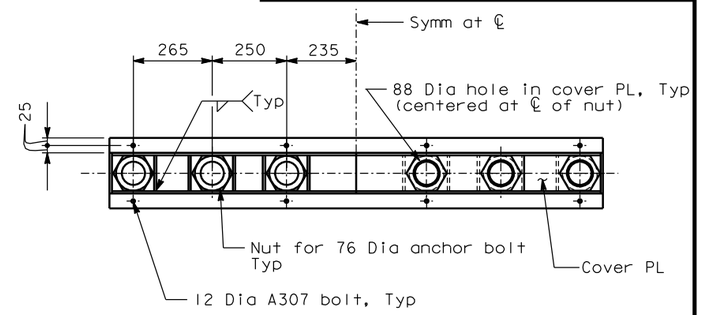

SECTION C-C

1:10

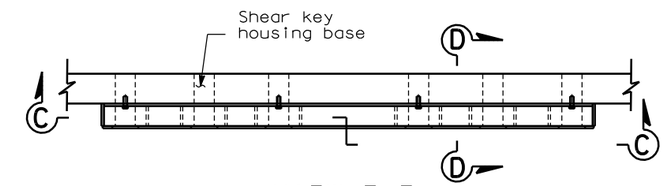

VIEW E-E

NUT RETAINER ASSEMBLY-ELEVATION

1:10

(All plates 8 mm thick)

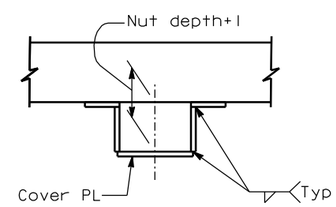

SECTION D-D

1:5

NOTES:

1. The shear key housing shall be Structural Casting Grade 345.
2. The shear key housing bolt layout shall accommodate the girder and crossbeam plate stiffener location. For girder details at Pier E2, see "Girder At Pier E2 details" sheet. For crossbeam details at pier E2, see "Crossbeam at Pier E2" sheets.
3. Bolt hole location shall be cross checked with the box girder and crossbeam stiffener layout before drilling holes. Bolt edge distance and clearance for tightening shall be verified and submitted for review and approval by the Engineer. A template shall be used to drill bolt holes in shear key housing and girder key plate to ensure hole matching.
4. The anchor bolts shall be pretensioned to 70% of ultimate tensile strength.
5. Nut retainer assemblies including nuts shall be installed to shear key housing prior to assembling housing to bushing and stub.
6. Machined washers at bolt heads shall be used if necessary at stiffener fillets.

REQUESTS FOR INFORMATION NOT ADDRESSED IN THIS CCO REMAIN IN FORCE

MARK	DATE	DESCRIPTIONS	BY	CH'D	CCO#
1	09/26/08	E2 CROSS BEAM	MN	NV	71

REVISIONS

CONTRACT CHANGE ORDER NO. ____
SHEET ___ OF ___

ALL DIMENSIONS ARE IN MILLIMETERS UNLESS OTHERWISE SHOWN

R. Valizadeh/V. Toan/Y.L./W.L./F.C.
DESIGN OVERSIGHT
Rza Valizadeh / Vong Toan / Y. Liu
SIGN OFF DATE 09/26/08

Rev. Date: 5-18-98

	BY	CHECKED
DESIGN	M. Nader	J. Denis
DETAILS	N. Vo	J. Denis
QUANTITIES	N. Vo	J. Denis

PREPARED FOR THE STATE OF CALIFORNIA DEPARTMENT OF TRANSPORTATION

R. Manzanarez
PROJECT ENGINEER

BRIDGE NO. 34-0006L/R
KILOMETER POST 13.2/13.9

SAN FRANCISCO OAKLAND BAY BRIDGE
EAST SPAN SEISMIC SAFETY PROJECT
SELF-ANCHORED SUSPENSION BRIDGE
(SUPERSTRUCTURE & TOWER)

PIER E2 SHEAR KEY DETAILS NO. 2

ORIGINAL SCALE IN MILLIMETERS FOR REDUCED PLANS 0 10 20 30 40 50 60 70 80 90 100

CU 04
EA 0120F1

DISREGARD PRINTS BEARING EARLIER REVISION DATES

REVISION DATES (PRELIMINARY STAGE ONLY): 04/08/02 01/07/02 12/18/02 05/18/03 12/01/05

SHEET 471R1 OF

FILE => I:\bb\04-012001\sas\contract plans and cco\cco\in progress\cco#71\original 09-26-08\dgn\aksrd01b.dgn

100% PS&E

DATE PLOTTED => 08 OCT 2008 TIME PLOTTED => 15:40:47

USERNAME => ptom