DIST.	COUNTY	ROUTE	KILOMETER POST TOTAL PROJECT	SHEET NO.	TOTAL SHEETS
04	SF	80	13.2/13.9	888AR1	1204

REGISTERED ENGINEER - CIVIL

12-7-05

PLANS APPROVAL DATE

REGISTERED PROFESSIONAL ENGINEER Marwan N. Nader No. C 054426 Exp. 12/31/09 CIVIL STATE OF CALIFORNIA

The State of California or its officers or agents shall not be responsible for the accuracy or completeness of electronic copies of this plan sheet.

T.Y. LIN / MOFFATT & NICHOL
825 BATTERY STREET
SAN FRANCISCO, CA 94111

Caltrans now has a web site! To get to the web site, go to: http://www.dot.ca.gov

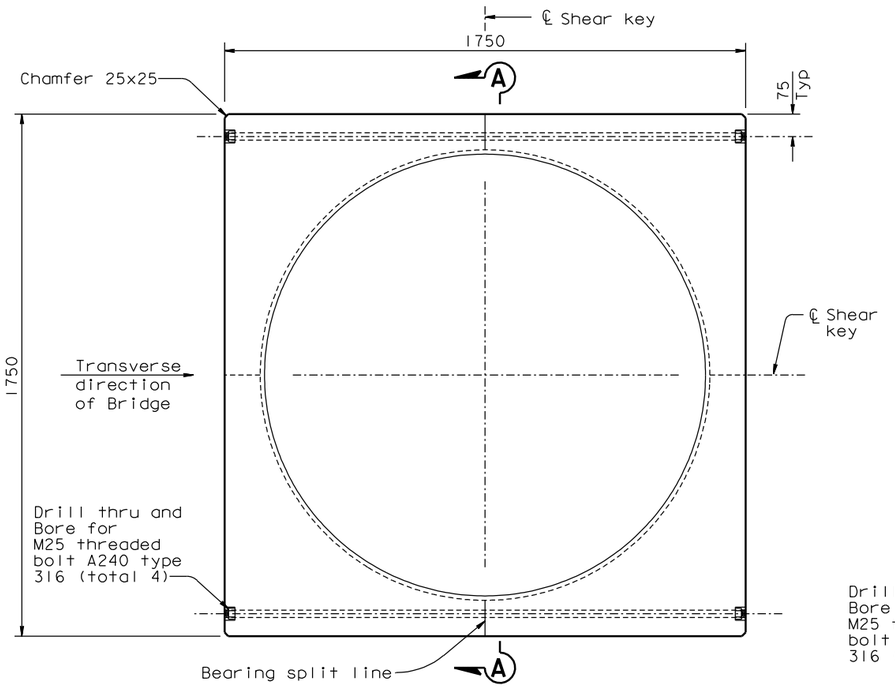

PLAN - SPHERICAL HOUSING
1:10

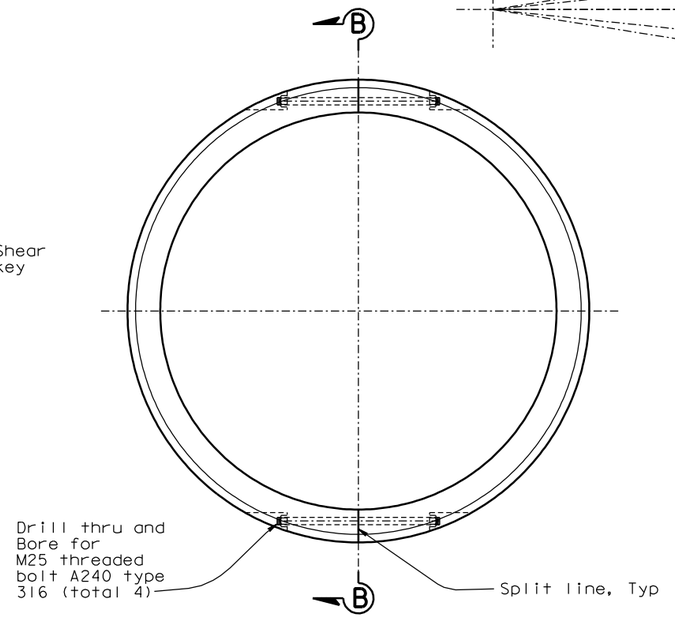

PLAN - SPHERICAL RING
1:10

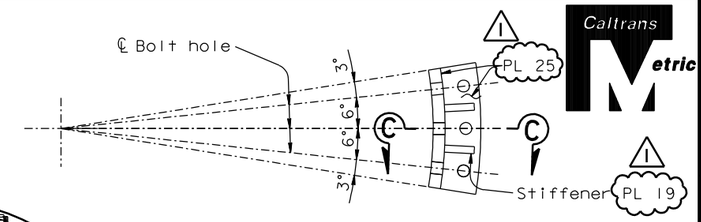

DETAIL A
1:5

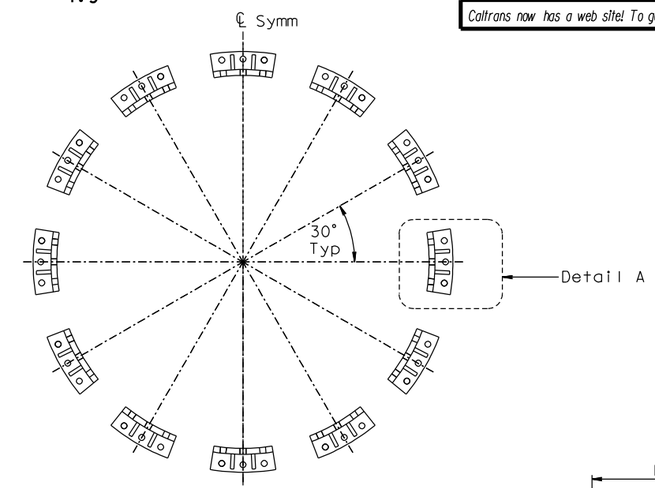

PLAN - RETAINER BRACKET (Looking up)
1:10

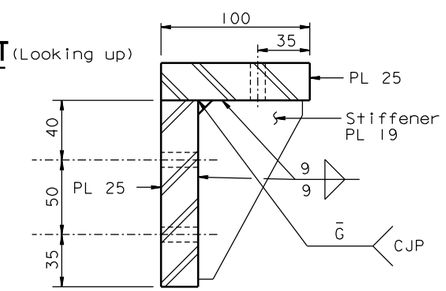

SECTION C-C
1:2

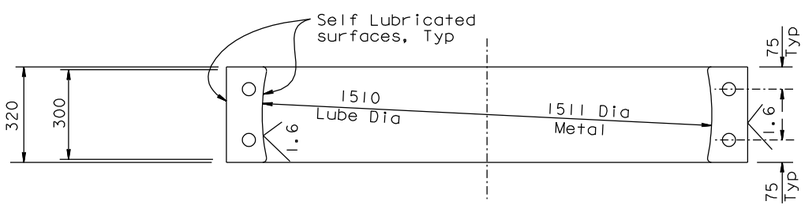

SECTION A-A
1:10

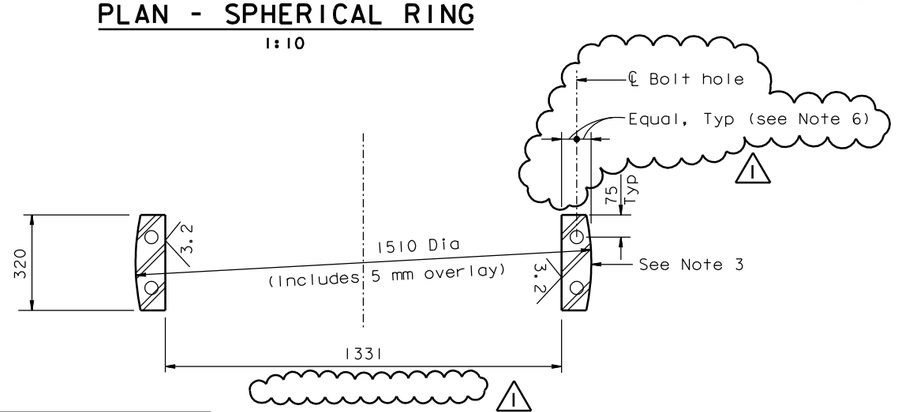

SECTION B-B
1:10

NOTES:

1. The spherical ring shall be Structural Casting Grade 345.
2. The spherical housing shall be high strength manganese bronze centrifugally cast to the requirements of B271-C86300. All assembly bolts shall be stainless steel A240 Type 316. 1
3. The mating surfaces of the spherical ring shall be 5 mm thick stainless steel weld overlay conforming to the requirements of A240, Type 316. 1
4. The lubricant shall be self-lubricated.
5. The spherical ring shall be "snug fit" over the shaft section of the shear key stub with a diameter gap of 1 mm Max.
6. At the Contractor's option, bolt hole location may be adjusted to accomodate seating of bolt nut and washer, subject to review and approval of the Engineer. 1

REQUESTS FOR INFORMATION NOT ADDRESSED IN THIS CCO REMAIN IN FORCE

MARK	DATE	DESCRIPTIONS	BY	CH'D	CCO#
1	09/26/08	E2 CROSS BEAM	MN	NV	71

REVISIONS

CONTRACT CHANGE ORDER NO. ____
SHEET ___ OF ___

ALL DIMENSIONS ARE IN MILLIMETERS UNLESS OTHERWISE SHOWN

SAN FRANCISCO OAKLAND BAY BRIDGE
EAST SPAN SEISMIC SAFETY PROJECT
SELF-ANCHORED SUSPENSION BRIDGE
(SUPERSTRUCTURE & TOWER)

PIER E2 SHEAR KEY DETAILS NO. 3

R. Valizadeh/V. Toan/Y.L./W.L./F.C.
DESIGN OVERSIGHT
Y. Liu
SIGN OFF DATE 09/26/08

	BY	CHECKED
DESIGN	M. Nader	J. Denis
DETAILS	N. Vo	J. Denis
QUANTITIES	N. Vo	J. Denis

PREPARED FOR THE STATE OF CALIFORNIA DEPARTMENT OF TRANSPORTATION

R. Manzanarez
PROJECT ENGINEER

BRIDGE NO. 34-0006L/R
KILOMETER POST 13.2/13.9

Rev. Date: 5-18-98

ORIGINAL SCALE IN MILLIMETERS FOR REDUCED PLANS 0 10 20 30 40 50 60 70 80 90 100

CU 04
EA 0120F1

DISREGARD PRINTS BEARING EARLIER REVISION DATES

REVISION DATES (PRELIMINARY STAGE ONLY) 12/07/05

SHEET 471AR1 OF

FILE => I:\bb\04-012001\sas\contract plans and cco\cco\in progress\cco#71\original 09-26-08\dgn\aksrd01c.dgn

USERNAME => ptam DATE PLOTTED => 08 OCT 2008 TIME PLOTTED => 15:41:35

100% PS&E