DIST.	COUNTY	ROUTE	KILOMETER POST TOTAL PROJECT	SHEET NO.	TOTAL SHEETS
04	SF	80	13.2/13.9	887R2	1204

Caltrans Metric

REGISTERED ENGINEER - CIVIL

12-6-04

PLANS APPROVAL DATE

REGISTERED PROFESSIONAL ENGINEER Marwan N. Nader No. C 054426 Exp. 12/31/09 CIVIL STATE OF CALIFORNIA

The State of California or its officers or agents shall not be responsible for the accuracy or completeness of electronic copies of this plan sheet.

T.Y. LIN / MOFFATT & NICHOL
825 BATTERY STREET
SAN FRANCISCO, CA 94111

Caltrans now has a web site! To get to the web site, go to: http://www.dot.ca.gov

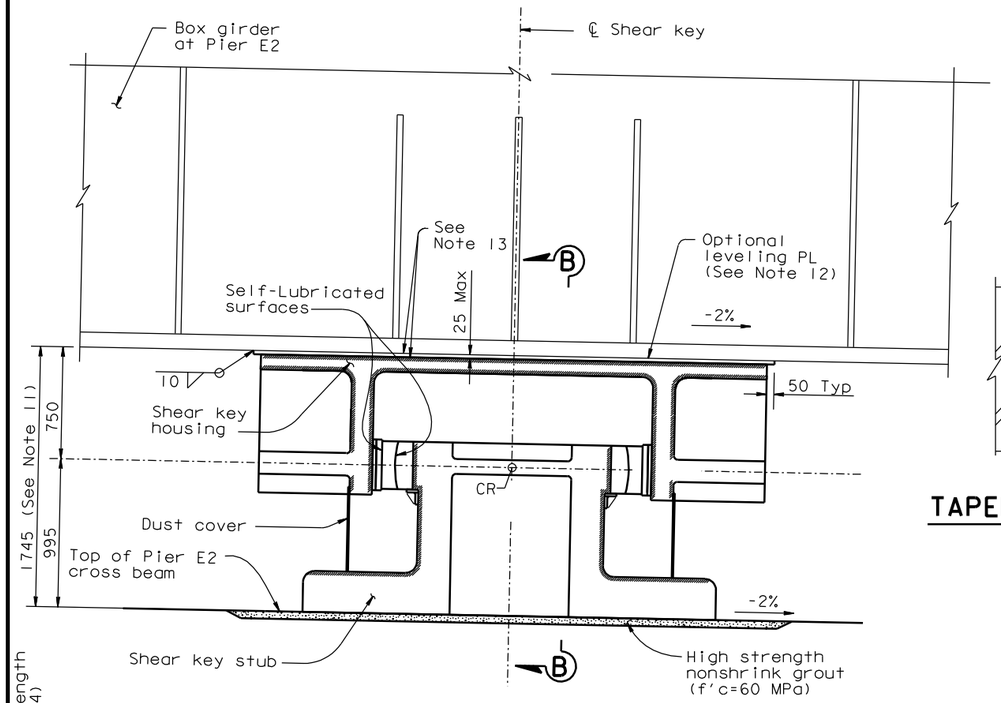

DETAIL B - SHEAR KEY ASSEMBLY

1:20
(Bolts not shown for clarity)
(Looking East)

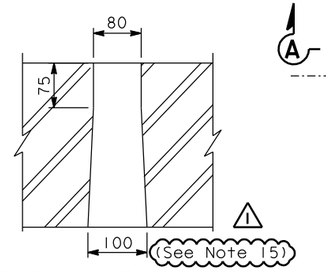

TAPERED HOLE DETAIL

1:5

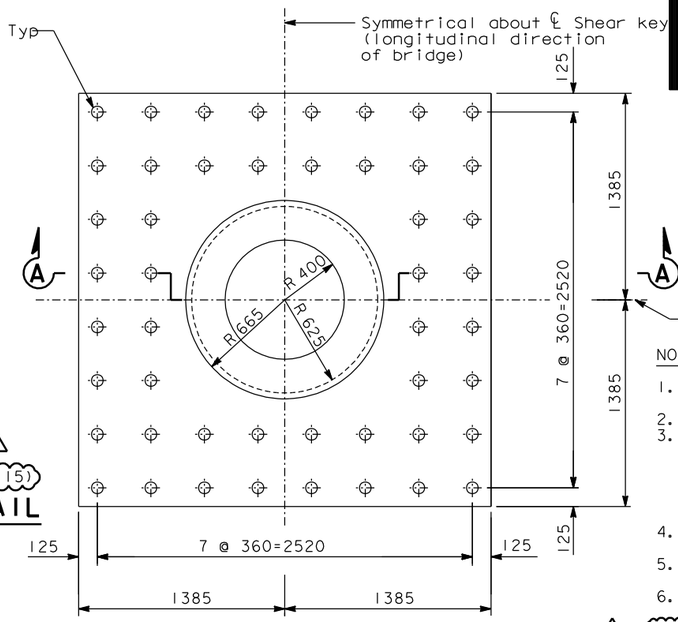

PLAN - SHEAR KEY STUB

1:20
(Anchor bolts not shown for clarity)

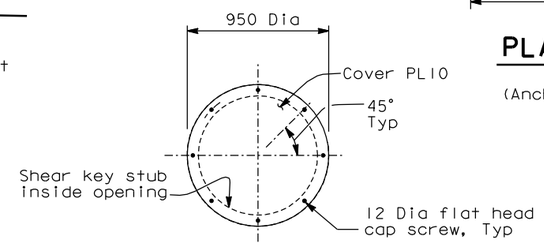

SECTION C-C

1:20

LEGEND:

CR — Center of Rotation

Indicates zone with Level I testing requirements

NOTES:

1. The shear key stub shall be Structural Casting Grade 345.
2. The lubricant shall be self-lubricated.
3. The grout pad thickness is shown for information only. The Contractor shall verify in the field the grout pad thickness required to align the center of rotation of the shear key and bearings at 0.750 m from the bottom surface of the box girder.
4. The anchor bolts shall be pretensioned by jacking to 70% ultimate tensile strength.
5. The oversize anchor bolt holes are provided to accommodate construction tolerances.
6. For additional prestressing details, see "Prestressing Notes" sheet.
7. The prestressed anchor bolts shall be wrapped in a PT supplier recommended debonding tape, subject to the review and approval of the Engineer.
8. The spherical nut and washer shall be able to accomodate a maximum rotation of 3 degrees in any direction.
9. Grout-tight neoprene seal shown is schematic and is for information only. The seal shall prevent any high strength nonshrink grout from seeping inside the anchor bolt tapered holes during grouting of the shear key stub. This is necessary for proper stressing of the anchor bolts. The Contractor may propose an alternate detail to suit their erection means and methods, subject to review and approval of the Engineer.
10. Bolted connection between shear key housing and box girder is slip-critical connection with class B contact surface.
11. The Contractor may provide optional leveling plates to achieve fit-up and level contact surfaces for the bearings and shear keys. The Contractor shall erect the E2 cap beam and E2 girders to the elevations and tolerances specified in the plans and special provisions.
12. Leveling plate shall be attached with plug welds at 0.5 m Max spacing, and a perimeter fillet weld.
13. All faying surfaces of the girder key plate, the shear key housing, and the optional leveling plate shall be machined after all welding for flatness and smoothness as specified for the top of the shear key housing. See "Pier E2 Shear Key Detail No. 2" sheet.
14. Extension length for anchor bolts at "E" Line and "W" Line shear keys shall be long enough to engage hydraulic jack.
15. At the Contractor's option, the tapered anchor hole may increase to 200 in lieu of the 100 shown on the plans.
16. The top shear key stub shaft section shall be "snug-fit" inside the spherical ring with a diameter gap between ring and stub of 1 mm Max.
17. At the Contractor's option, 10 mm radius may be used to facilitate stressing of anchor bolts.

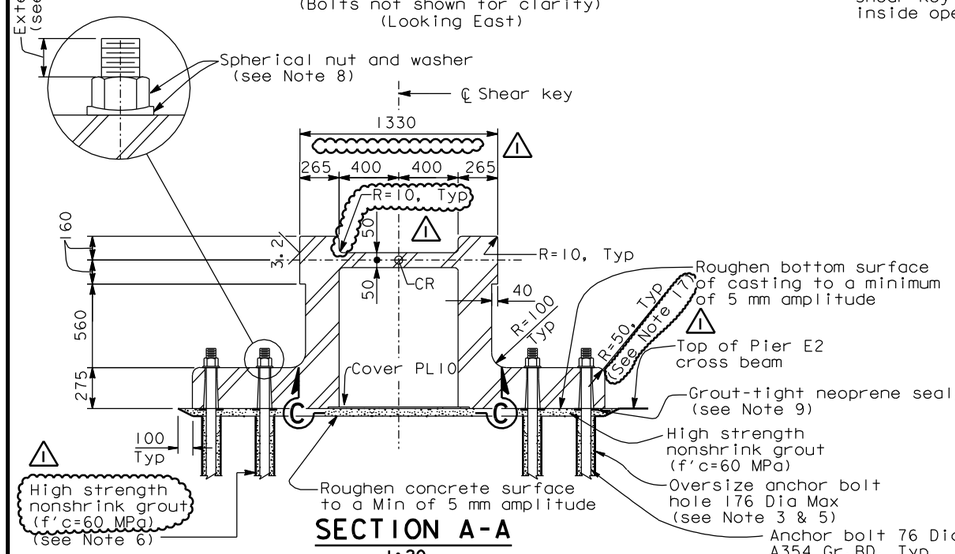

SECTION A-A

1:20

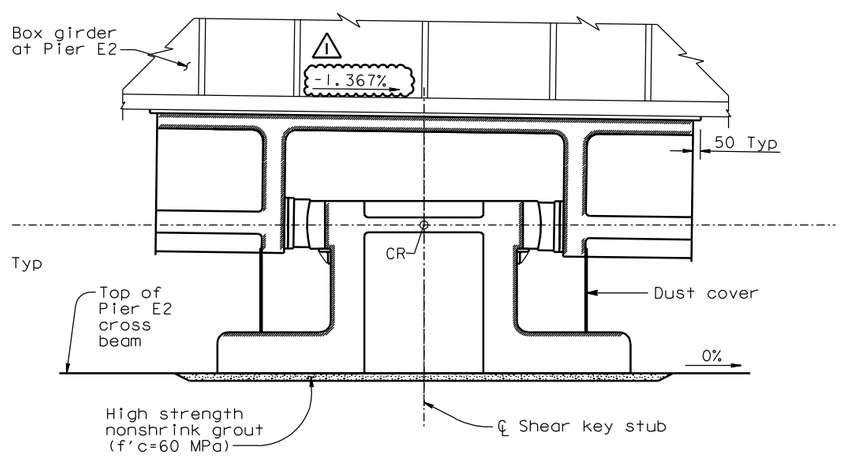

SECTION B-B

1:20
(Bolts not shown for clarity)

ALL DIMENSIONS ARE IN MILLIMETERS UNLESS OTHERWISE SHOWN

CONTRACT CHANGE ORDER NO. ____
SHEET ____ OF ____

REQUESTS FOR INFORMATION NOT ADDRESSED IN THIS CCO REMAIN IN FORCE

R. Valizadeh/V. Toan/Y.L./W.L./F.C.
DESIGN OVERSIGHT
Roya Valizadeh / Vong Toan / Y. Liu
SIGN OFF DATE 07/17/09

Rev. Date: 5-18-98

MARK	DATE	DESCRIPTIONS	BY	CH'D	CCO#
2	07/17/09	E2 CROSS BEAM	MN	NV	71
1	09/26/08	E2 CROSS BEAM	MN	NV	71

REVISIONS

	BY	CHECKED
DESIGN	M. Nader	J. Denis
DETAILS	N. Vo	J. Denis
QUANTITIES	N. Vo	J. Denis

PREPARED FOR THE STATE OF CALIFORNIA DEPARTMENT OF TRANSPORTATION

R. Manzanarez
PROJECT ENGINEER

BRIDGE NO. 34-0006L/R
KILOMETER POST 13.2/13.9

SAN FRANCISCO OAKLAND BAY BRIDGE
EAST SPAN SEISMIC SAFETY PROJECT
SELF-ANCHORED SUSPENSION BRIDGE
(SUPERSTRUCTURE & TOWER)

PIER E2 SHEAR KEY DETAILS NO. 1

ORIGINAL SCALE IN MILLIMETERS FOR REDUCED PLANS 0 10 20 30 40 50 60 70 80 90 100

CU 04
EA 0120F1

DISREGARD PRINTS BEARING EARLIER REVISION DATES

REVISION DATES (PRELIMINARY STAGE ONLY) 04/08/02 01/04/02 12/18/02 05/16/03 12/01/05

SHEET 470R2 OF

FILE => I:\bb\04-012001\sas\contract plans and cco\cco\cco=71\4-revision 07-17-09\dgn\aksrd01a.dgn

100 % PS&E

USERNAME => altshansk DATE PLOTTED => 17 JUL 2009 TIME PLOTTED => 15:10:30