Caltrans now has a web site! To get to the web site, go to: http://www.dot.ca.gov

Caltrans Metric

DIST.	COUNTY	ROUTE	KILOMETER POST TOTAL PROJECT	SHEET NO.	TOTAL SHEETS
04	SF	80	13.2/13.9	885R1	1204

REGISTERED ENGINEER - CIVIL

12-6-04

PLANS APPROVAL DATE

REGISTERED PROFESSIONAL ENGINEER Marwan N. Nader No. C 054426 Exp. 12/31/09 CIVIL STATE OF CALIFORNIA

The State of California or its officers or agents shall not be responsible for the accuracy or completeness of electronic copies of this plan sheet.

T.Y. LIN / MOFFATT & NICHOL
825 BATTERY STREET
SAN FRANCISCO, CA 94111

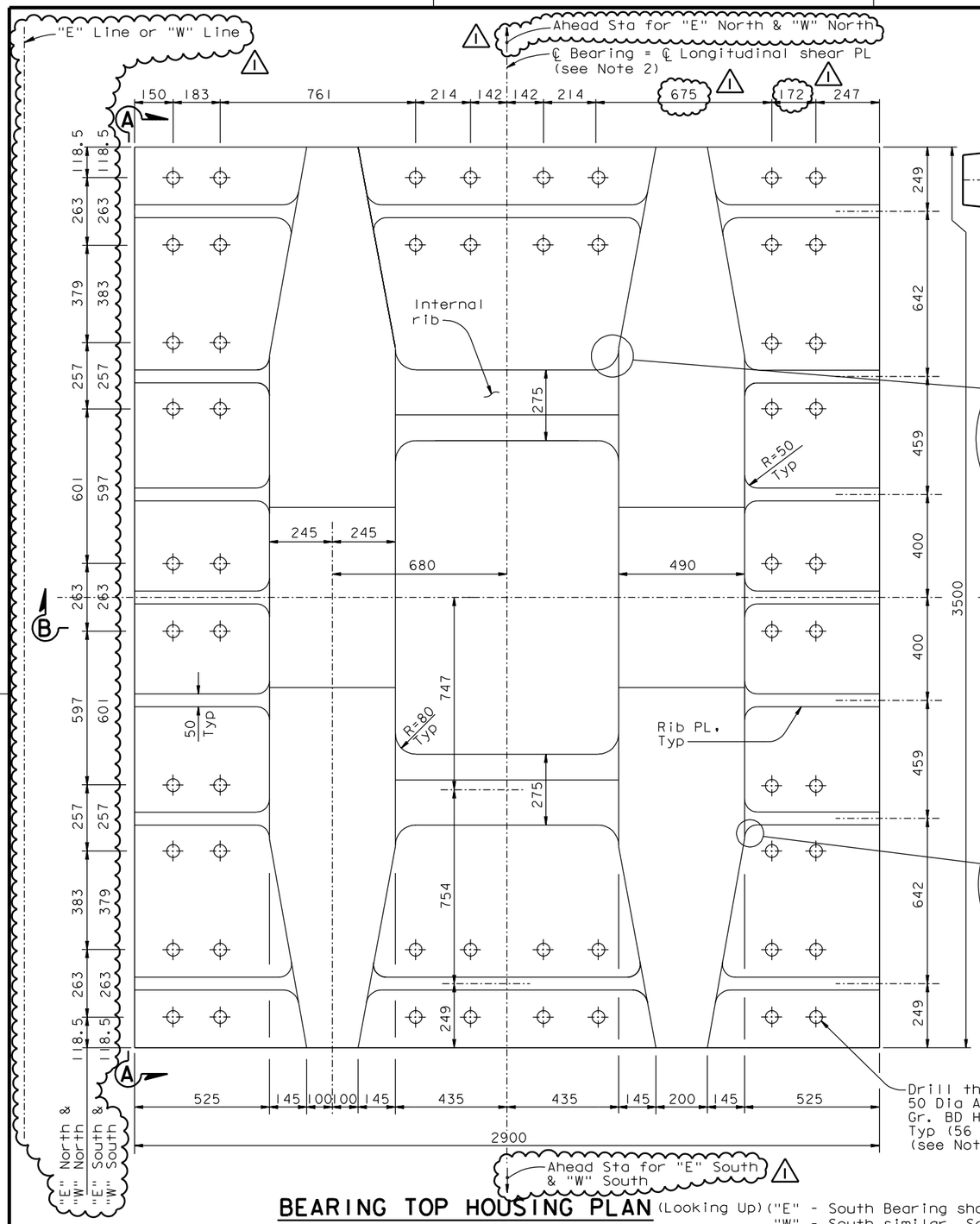

BEARING TOP HOUSING PLAN (Looking Up)

1:10

("E" - South Bearing shown. "W" - South similar. See Note 3 and 4)

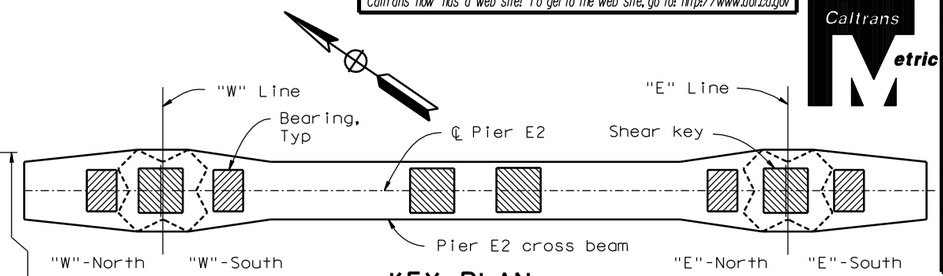

KEY PLAN

1:200

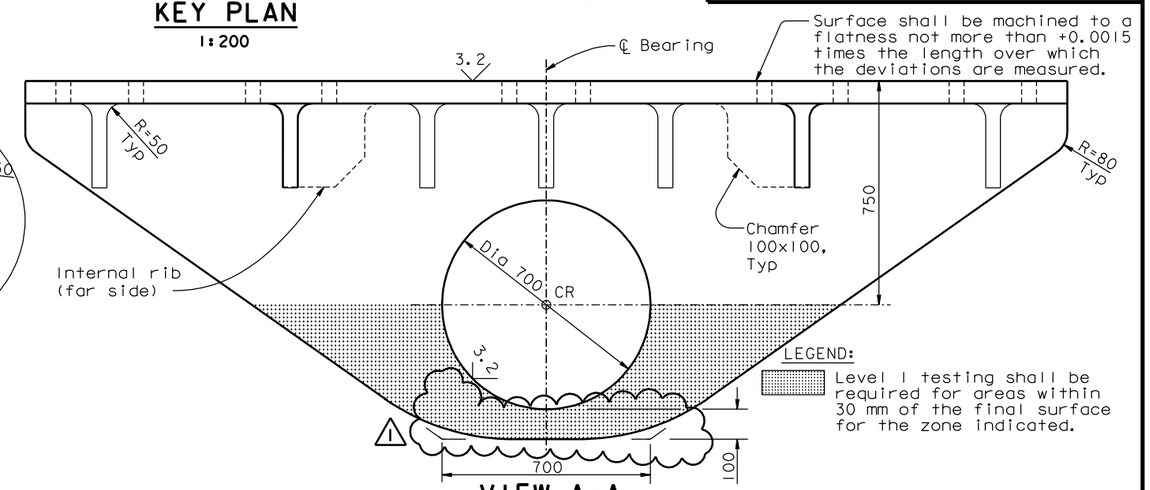

VIEW A-A

1:10

LEGEND:

Level I testing shall be required for areas within 30 mm of the final surface for the zone indicated.

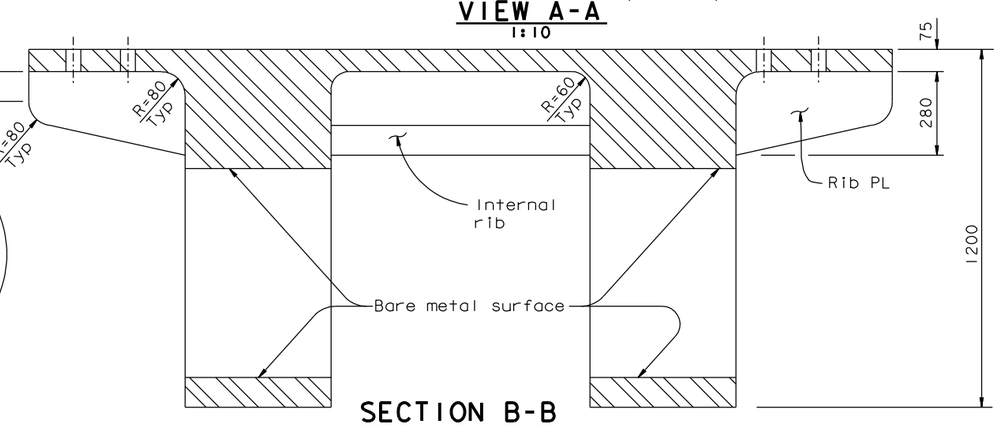

SECTION B-B

1:10

NOTES:

1. Solid shaft in bushings is press fit.
2. For longitudinal shear plate location on box girder, see "Girder At East Transition No. I" sheet.
3. "E"-South bearing and "W"-South bearing are similar. "E"-North bearing and "W"-North bearing are similar.
4. Bolt hole location shall be cross checked with the box girder stiffener layout before drilling holes. Bolt edge distance and clearance for tightening shall be verified and submitted for review and approval by the Engineer. A template shall be used to drill bolt holes in bearing top housing and girder key plate to ensure hole matching.
5. The anchor bolt shall be pretensioned to 70% of ultimate tensile strength.
6. At the Contractor's option, oversized holes and appropriate washer plates may be used in the bearing top housing.

ALL DIMENSIONS ARE IN MILLIMETERS UNLESS OTHERWISE SHOWN

REQUESTS FOR INFORMATION NOT ADDRESSED IN THIS CCO REMAIN IN FORCE

MARK	DATE	DESCRIPTIONS	BY	CH'D	CCO#
1	09/26/08	E2 CROSS BEAM	MN	NV	71

REVISIONS

CONTRACT CHANGE ORDER NO. ____
SHEET ____ OF ____

R. Valizadeh/V. Toan/Y.L./W.L./F.C.
DESIGN OVERSIGHT
Ryan Valizadeh / Vong Toan / Y. Liu
SIGN OFF DATE 09/26/08

Rev. Date: 5-18-98

DESIGN	BY M. Nader	CHECKED L. Rus	
DETAILS	BY N. Vo	CHECKED J. Leventini	
QUANTITIES	BY N. Vo	CHECKED J. Leventini	

PREPARED FOR THE STATE OF CALIFORNIA DEPARTMENT OF TRANSPORTATION

R. Manzanarez
PROJECT ENGINEER

BRIDGE NO. 34-0006L/R
KILOMETER POST 13.2/13.9

CU 04
EA 0120F1

DISREGARD PRINTS BEARING EARLIER REVISION DATES 08/28/99 05/31/01 04/08/02 07/01/02 12/18/02 10/13/05 12/01/05

ORIGINAL SCALE IN MILLIMETERS FOR REDUCED PLANS 0 10 20 30 40 50 60 70 80 90 100

SAN FRANCISCO OAKLAND BAY BRIDGE
EAST SPAN SEISMIC SAFETY PROJECT
SELF-ANCHORED SUSPENSION BRIDGE
(SUPERSTRUCTURE & TOWER)

PIER E2 BEARING DETAILS NO. 3

SHEET 468R1 OF

FILE => I:\bb\04-0120I\sas\contract plans and cco\cco\in progress\cco#71\original 09-26-08\dgn\akbrg03.dgn

100% PS&E

DATE PLOTTED => 08 OCT 2008 TIME PLOTTED => 15:38:09

USERNAME => ptom