DIST.	COUNTY	ROUTE	KILOMETER POST TOTAL PROJECT	SHEET NO.	TOTAL SHEETS
04	SF	80	13.2/13.9	884R1	1204

Caltrans Metric

REGISTERED ENGINEER - CIVIL

12-6-04

PLANS APPROVAL DATE

REGISTERED PROFESSIONAL ENGINEER Marwan N. Nader No. C 054426 Exp. 12/31/09 CIVIL STATE OF CALIFORNIA

The State of California or its officers or agents shall not be responsible for the accuracy or completeness of electronic copies of this plan sheet.

T.Y. LIN / MOFFATT & NICHOL
825 BATTERY STREET
SAN FRANCISCO, CA 94111

Caltrans now has a web site! To get to the web site, go to: http://www.dot.ca.gov

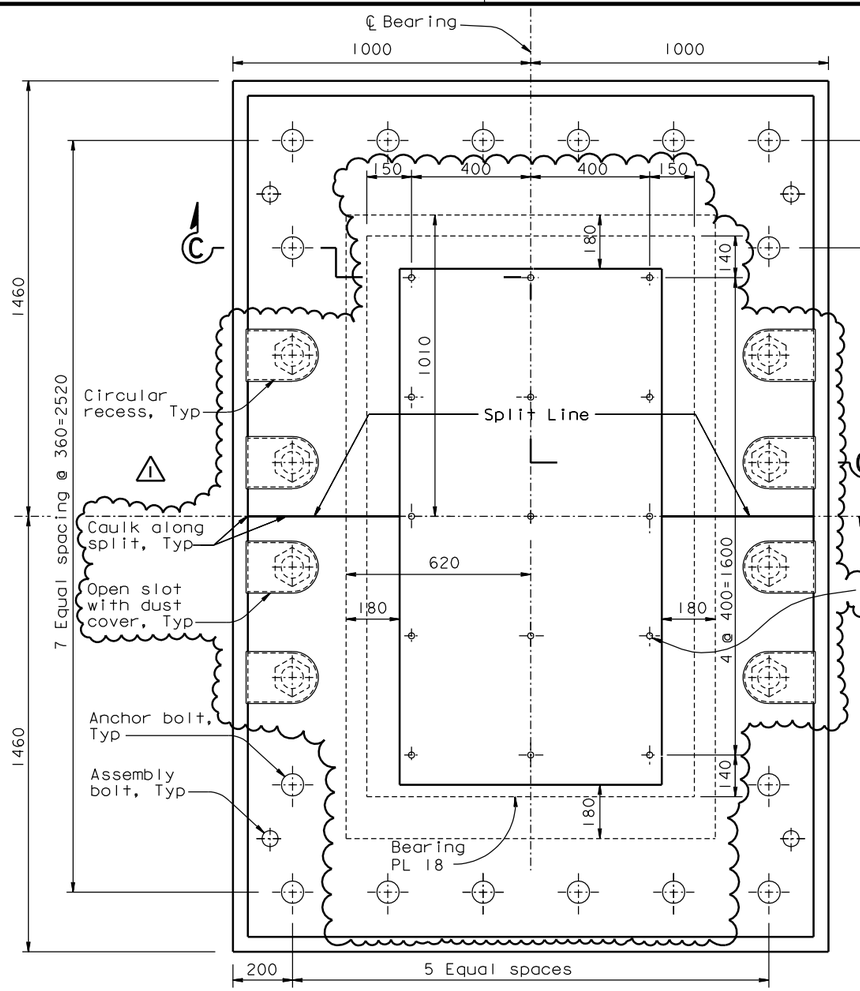

BEARING HOLD DOWN ASSEMBLY PLAN

1:10 (Looking down)

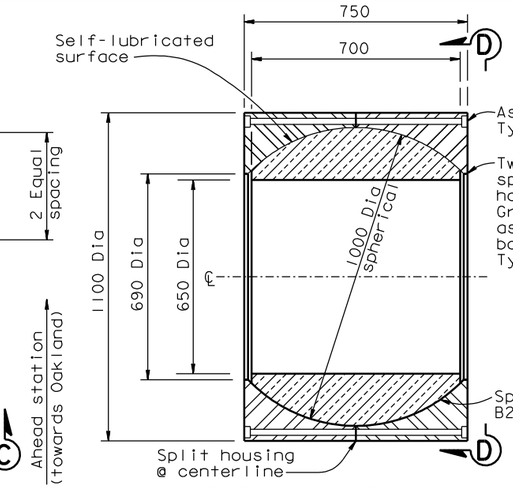

SPHERICAL BUSHING ASSEMBLY DETAIL

1:10

LEGEND:

Indicates zone with Level I testing requirements

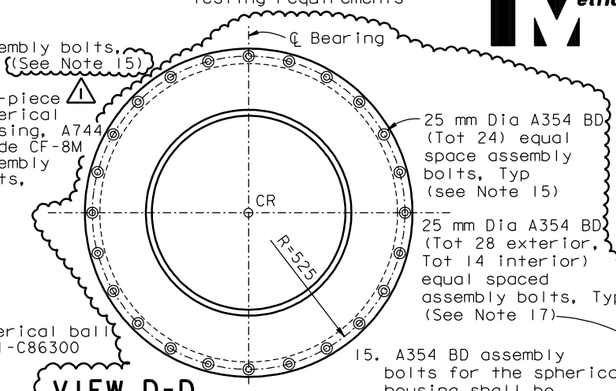

VIEW D-D

1:10

15. A354 BD assembly bolts for the spherical housing shall be stressed to 0.7 Fy.

16. For Detail A and A', see "Pier E2 Bearing Details No. 2A" sheet.

17. A354 BD assembly bolts for the retaining ring plate shall be installed snug-tight plus 1/4 turn.

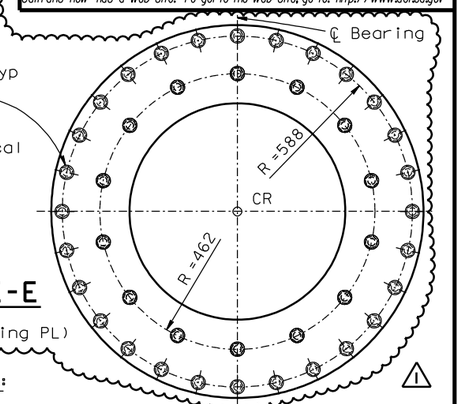

VIEW E-E

1:10 (Retaining Ring PL)

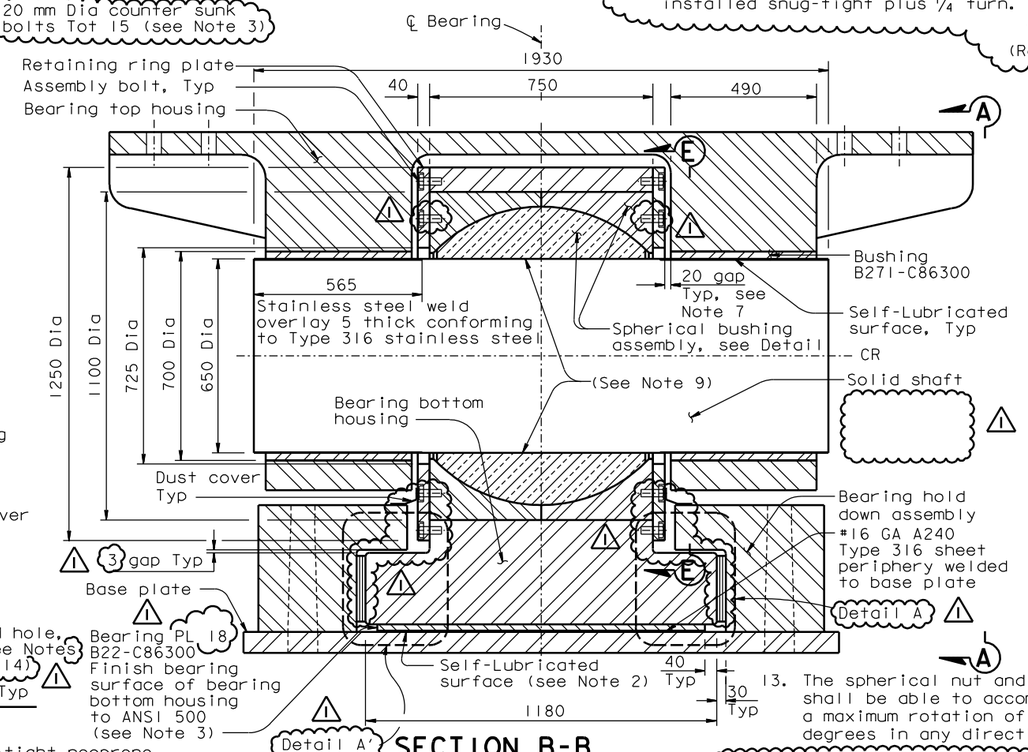

SECTION B-B

1:10

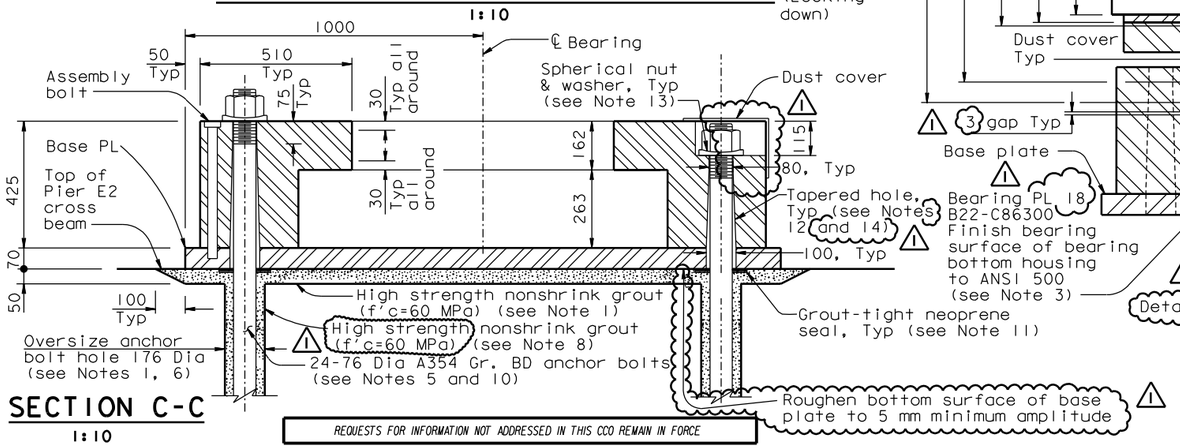

SECTION C-C

1:10

13. The spherical nut and washer shall be able to accomodate a maximum rotation of 3 degrees in any direction.

14. At the Contractor's option, the tapered anchor hole may increase to 200 in lieu of the 100 shown on the plans.

NOTES:

1. The grout pad thickness is shown for information only. The Contractor shall verify in the field the grout pad thickness required to align the center of rotation of the shear key and bearings at 0.750 m from the bottom surface of the box girder.
2. The lubricant shall be Self-lubricated.
3. Bearing plate shall be fastened to bottom of bottom housing using A240 Type 316 counter sunk bolts.
4. All assembly bolts shall be A240 Type 316 unless noted otherwise.
5. The anchor bolt shall be pretensioned to 70% of ultimate tensile strength. Wherever there is no access from the top, anchor bolt shall be prestressed from the bottom.
6. The oversize anchor bolt holes are provided to accommodate construction tolerances.
7. 20 mm gap ±2 mm shall be maintained on both sides during installation.
8. For additional prestressing details, see "Prestressing Notes" sheet.
9. Solid shaft in bushing is press fit.
10. The prestressed anchor bolts shall be wrapped in a PT supplier recommended debonding tape, subject to the review and approval of the Engineer.
11. Grout-tight neoprene seal shown is schematic and is for information only. The seal shall prevent any high strength nonshrink grout from seeping inside the anchor bolt tapered holes during grouting of the base plate. This is necessary for proper stressing of the anchor bolts. The Contractor may propose an alternate detail to suit his erection means and methods, subject to review and approval of the Engineer.
12. For tapered hole details, see "Pier E2 Shear Key Details No. 1" sheet.

REQUESTS FOR INFORMATION NOT ADDRESSED IN THIS CCO REMAIN IN FORCE

ALL DIMENSIONS ARE IN MILLIMETERS UNLESS OTHERWISE SHOWN

100% PS&E

R. Valizadeh/V. Toan/Y.L./W.L./F.C.
DESIGN OVERSIGHT
Ryan Valizadeh / Vong Toan / Y. Liu
SIGN OFF DATE 09/26/08
Rev. Date: 5-18-98

MARK	DATE	DESCRIPTIONS	BY	CH'D	CCO#
1	09/26/08	E2 CROSS BEAM	MN	NV	71

REVISIONS

CONTRACT CHANGE ORDER NO. ____
SHEET ____ OF ____

DESIGN	BY M. Nader	CHECKED L. Rus	
DETAILS	BY N. Vo	CHECKED J. Leventini	
QUANTITIES	BY N. Vo	CHECKED J. Leventini	

PREPARED FOR THE STATE OF CALIFORNIA DEPARTMENT OF TRANSPORTATION

R. Manzanarez
PROJECT ENGINEER

BRIDGE NO. 34-0006L/R
KILOMETER POST 13.2/13.9

SAN FRANCISCO OAKLAND BAY BRIDGE
EAST SPAN SEISMIC SAFETY PROJECT
SELF-ANCHORED SUSPENSION BRIDGE (SUPERSTRUCTURE & TOWER)

PIER E2 BEARING DETAILS NO. 2

ORIGINAL SCALE IN MILLIMETERS FOR REDUCED PLANS 0 10 20 30 40 50 60 70 80 90 100

CU 04
EA 0120F1

DISREGARD PRINTS BEARING EARLIER REVISION DATES

REVISION DATES (PRELIMINARY STAGE ONLY): 04/08/02 07/01/02 12/19/02 05/18/03 12/07/05

SHEET 467R1 OF

FILE => I:\bb\04-012001\sas\contract plans and cco\cco\in progress\cco#71\original 09-26-08\dgn\akbrg02.dgn

USERNAME => ptom DATE PLOTTED => 08 OCT 2008 TIME PLOTTED => 15:36:24