DIST	COUNTY	ROUTE	KILOMETER POST TOTAL PROJECT	SHEET No	TOTAL SHEETS
04	SF	80	13.2/13.9	288 S3	1204

REGISTERED ELECTRICAL ENGINEER DATE

PLANS APPROVAL DATE

REGISTERED PROFESSIONAL ENGINEER FADI WALIEDDINE No. 11465 Exp. 12/31/2009 ELECTRICAL STATE OF CALIFORNIA

PB AMERICAS, Inc.
A Parsons Brinckerhoff Company
303 Second St., Suite 700N
San Francisco, CA 94107-1317

The State of California or its officers or agents shall not be responsible for the accuracy or completeness of electronic copies of this plan sheet.

Caltrans now has a web site! To get to the web site, go to http://www.dot.ca.gov

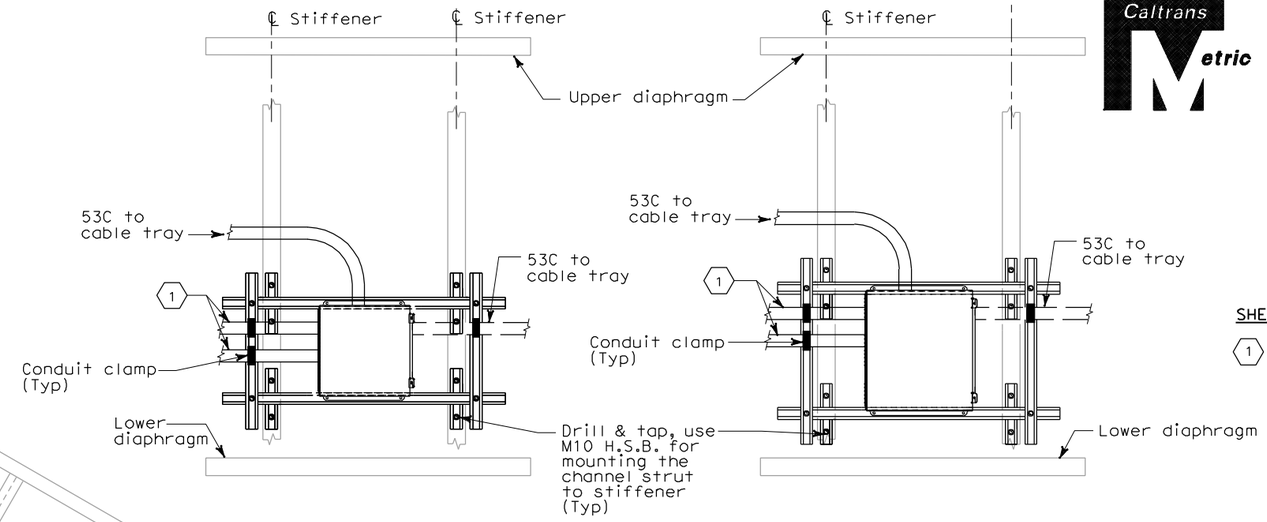

DETAIL 2
Shown for PB-4H

DETAIL 3
Shown for PB-4J

SHEET NOTES:

(1) Number and sizes of conduit are field route to lights, receptacles and switches. See E-282, E-284 and E-284A for conduit sizes and pull box type per location.

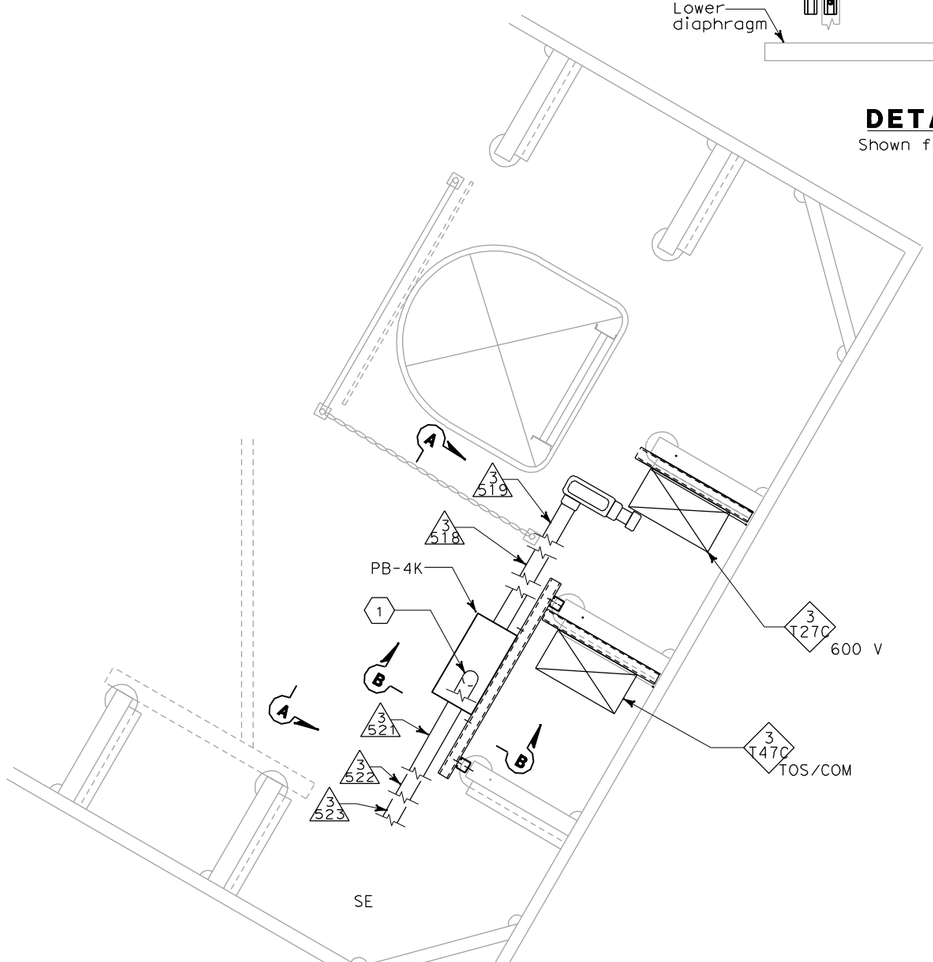

DETAIL 1
Plan at elevation 89.85. Shown for PB-4K
(Some conduits are not shown for clarity)

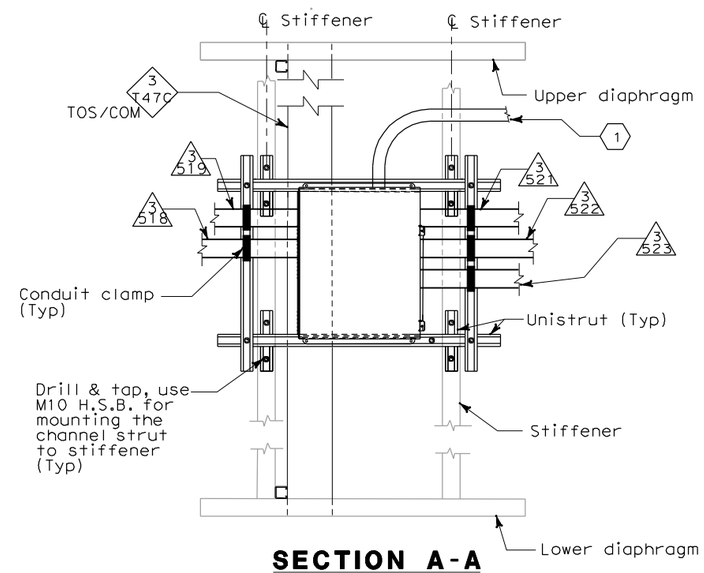

SECTION A-A
Shown for PB-4K

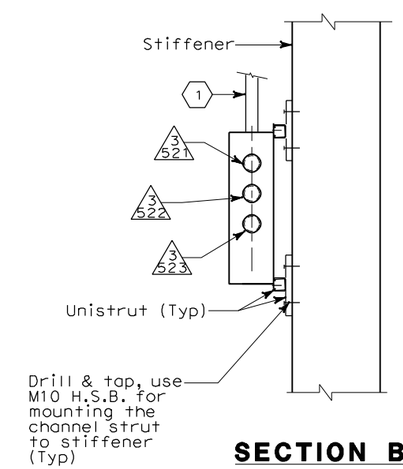

SECTION B-B
Shown for PB-4K

REQUEST FOR INFORMATION NOT ADDRESSED IN THIS CCO REMAIN IN FORCE					
0	12/11/09	TOWER UTILITY PANELS	JS TW	RG FW	70
MARK	DATE	DESCRIPTIONS	BY	CH'D	CCO#
REVISIONS					

CONTRACT CHANGE ORDER NO._____
SHEET_____ OF_____

DETAILS
TOWER AND SUSPENSION CABLE TOWER POWER AND LIGHTING
SCALE: 1:10

E-285C

THIS PLAN ACCURATE FOR ELECTRICAL WORK ONLY.

ALL DIMENSIONS ARE IN MILLIMETERS UNLESS OTHERWISE SHOWN.

FOR REDUCED PLANS ORIGINAL SCALE IS IN MILLIMETERS 0 20 40 60 80

DGN FILE =>t:\13103\ms\pse\SAS Struc\CCO\SAS CCO70\2009-12-02 issued for Submittal\04-0120f1_0288S03.dgn
USERNAME =>llorico

CU 04251 EA 0120F1

DATE PLOTTED => 12/10/2009
TIME PLOTTED => 4:03:53 PM

LAST REVISION 00-00-00

STATE OF CALIFORNIA - DEPARTMENT OF TRANSPORTATION
Caltrans

DESIGN OVERSIGHT
BEHZAD GOLEMOHAMMADI

CALCULATED/DESIGNED BY FK DATE 10/01 REVISED BY
CHECKED BY EDC 11/01 DATE REVISED