DIST	COUNTY	ROUTE	KILOMETER POST TOTAL PROJECT	SHEET No	TOTAL SHEETS
04	SF	80	13.2/13.9	280 S1	1204

REGISTERED ELECTRICAL ENGINEER DATE

PLANS APPROVAL DATE

REGISTERED PROFESSIONAL ENGINEER FADI WALIEDDINE No. 11465 Exp. 12/31/2009 ELECTRICAL STATE OF CALIFORNIA

PB AMERICAS, Inc.
A Parsons Brinckerhoff Company
303 Second St., Suite 700N
San Francisco, CA 94107-1317

The State of California or its officers or agents shall not be responsible for the accuracy or completeness of electronic copies of this plan sheet.

Caltrans now has a web site! To get to the web site, go to http://www.dot.ca.gov

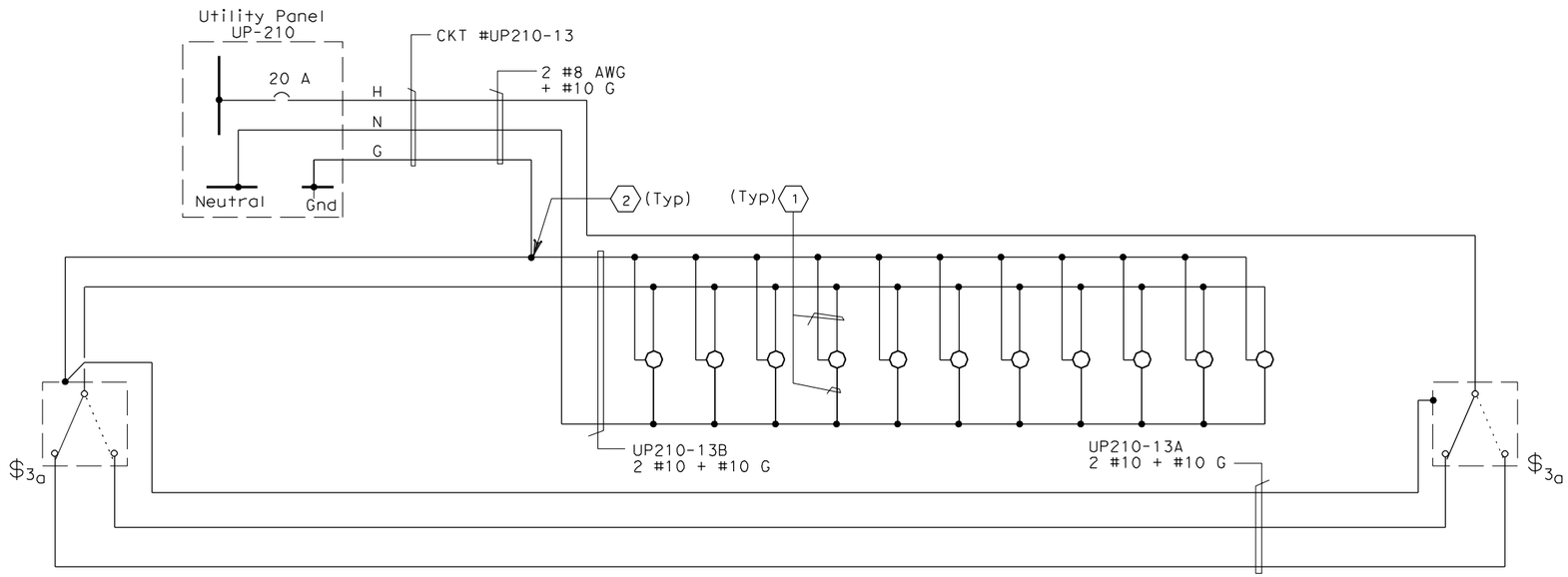

120V (UP210) TOWER PLATFORM EL. 53.85 m AND BELOW LIGHTING SCHEMATIC DIAGRAM - ALL DIAPHRAGMS

(SHOWN FOR CIRCUIT #UP210-13 ONLY
SEE TABLE 5, 6, 7 AND 8 FOR OTHER CIRCUITS)

SHEET NOTES:

1. 2#10, 1#10 G AWG single conductors.
2. Conductors spliced.

NOTES:

1. References:
   - For utility panel schedule, see sheet E-278.
   - For circuit, conduit and cable tray schedules, see sheets starting at E-401.
   - For typical tower ladder platform lighting, and power plan, see sheet E-284.

TABLE 5 (SE DIAPHRAGM)

Location At Tower Grating Elevation	Lighting At SE Tower Diaphragm CKT. Number	3-Way Switches CKT. Number	Receptacle CKT. Number
Elev 9.0	UP210-13	UP210-13	
Elev 13.0	UP210-13		UP210-17
Elev 15.0	UP210-13		
Elev 18.0	UP210-13		UP210-17
Elev 23.0	UP210-13		
Elev 28.0	UP210-13		UP210-17
Elev 33.0	UP210-13		UP210-17
Elev 38.0	UP210-13		
Elev 43.0	UP210-13		
Elev 47.6	UP210-13		UP210-17
Elev 53.0	UP210-13	UP210-13	UP210-17

TABLE 6 (NE DIAPHRAGM)

Location At Tower Grating Elevation	Lighting At NE Tower Diaphragm CKT. Number	3-Way Switches CKT. Number	Receptacle CKT. Number
Elev 9.0	UP210-15	UP210-15	
Elev 13.0	UP210-15		UP210-19
Elev 15.0	UP210-15		
Elev 18.0	UP210-15		UP210-19
Elev 23.0	UP210-15		
Elev 28.0	UP210-15		UP210-19
Elev 33.0	UP210-15		UP210-19
Elev 38.0	UP210-15		
Elev 43.0	UP210-15		
Elev 47.6	UP210-15		UP210-19
Elev 53.0	UP210-15	UP210-15	UP210-19

TABLE 7 (SW DIAPHRAGM)

Location At Tower Grating Elevation	Lighting At SW Tower Diaphragm CKT. Number	3-Way Switches CKT. Number	Receptacle CKT. Number
Elev 9.0	UP210-14	UP210-14	
Elev 13.0	UP210-14		UP210-18
Elev 15.0	UP210-14		
Elev 18.0	UP210-14		UP210-18
Elev 23.0	UP210-14		
Elev 28.0	UP210-14		UP210-18
Elev 33.0	UP210-14		UP210-18
Elev 38.0	UP210-14		
Elev 43.0	UP210-14		
Elev 47.6	UP210-14		UP210-18
Elev 53.0	UP210-14	UP210-14	UP210-18

TABLE 8 (NW DIAPHRAGM)

Location At Tower Grating Elevation	Lighting At NW Tower Diaphragm CKT. Number	3-Way Switches CKT. Number	Receptacle CKT. Number
Elev 9.0	UP210-16	UP210-16	
Elev 13.0	UP210-16		UP210-20
Elev 15.0	UP210-16		
Elev 18.0	UP210-16		UP210-20
Elev 23.0	UP210-16		
Elev 28.0	UP210-16		UP210-20
Elev 33.0	UP210-16		UP210-20
Elev 38.0	UP210-16		
Elev 43.0	UP210-16		
Elev 47.6	UP210-16		UP210-20
Elev 53.0	UP210-16	UP210-16	UP210-20

REQUEST FOR INFORMATION NOT ADDRESSED IN THIS CCO REMAIN IN FORCE

MARK	DATE	DESCRIPTIONS	BY	CH'D	CCO#
0	09/18/09	TOWER UTILITY PANELS	JS TW	RG FW	70

REVISIONS

CONTRACT CHANGE ORDER NO._____
SHEET_____ OF_____

DETAILS
TOWER AND SUSPENSION CABLE 120 V PIER LIGHTING WIRING DIAGRAM

NO SCALE

E-275A

DESIGN OVERSIGHT: BEHZAD GOLEMOHAMMADI

STATE OF CALIFORNIA - DEPARTMENT OF TRANSPORTATION

Caltrans

DATE	REVISED BY	DATE REVISED

CALCULATED/DESIGNED BY | CHECKED BY

LAST REVISION 00-00-00 | DATE PLOTTED => 12/10/2009 | TIME PLOTTED => 3:33:19 PM

FOR REDUCED PLANS ORIGINAL SCALE IS IN MILLIMETERS 0 20 40 60 80

DGN FILE =>t:\13103\ms\pse\SAS Struc\CCO\SAS CCO70\2009-12-02 issued for Submittal\04-0120f1_0280S01.dgn
USERNAME =>llorico

CU 04251 | EA 0120F1