DIST	COUNTY	ROUTE	KILOMETER POST TOTAL PROJECT	SHEET No	TOTAL SHEETS
04	SF	80	13.2/13.9	280 R1	1204

Caltrans Metric

12/19/02
REGISTERED ELECTRICAL ENGINEER DATE

12-6-04
PLANS APPROVAL DATE

REGISTERED PROFESSIONAL ENGINEER JENS ERLINGSSON No. 8249 Exp. 9/30/06 ELECTRICAL STATE OF CALIFORNIA

PB POWER, Inc.
A Parsons Brinckerhoff Company
303 Second St., Suite 700N
San Francisco, CA 94107-1317

The State of California or its officers or agents shall not be responsible for the accuracy or completeness of electronic copies of this plan sheet.

Caltrans now has a web site! To get to the web site, go to http://www.dot.ca.gov

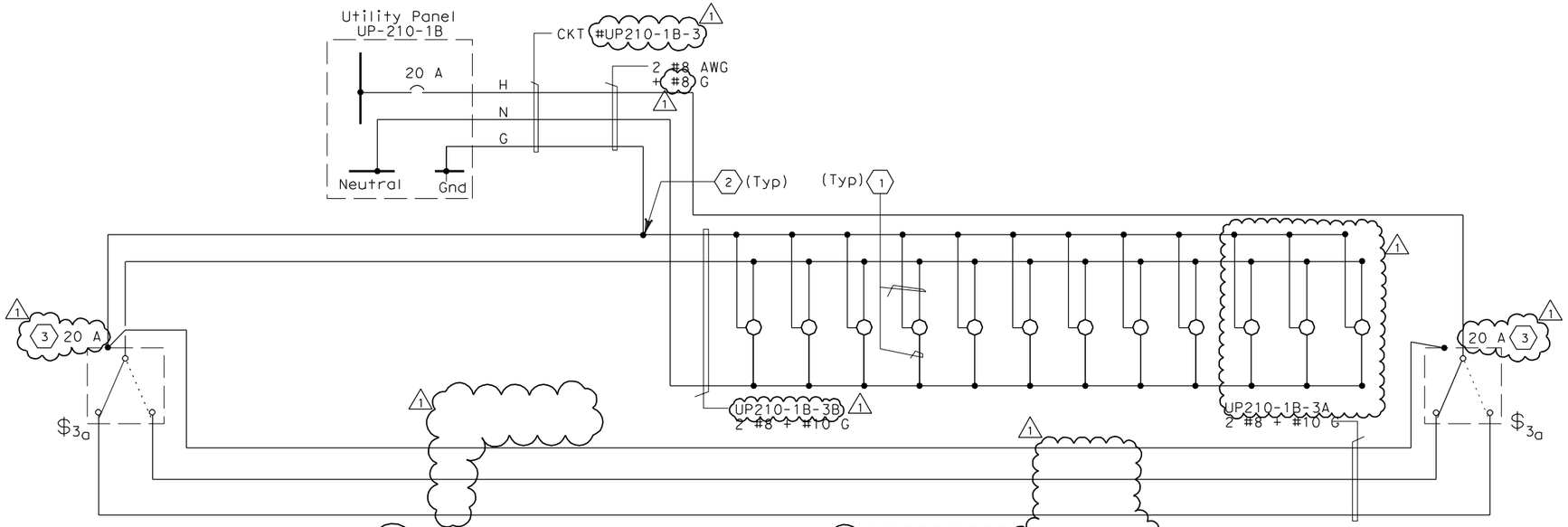

120V (UP210-1B) TOWER PLATFORM ABOVE EL. 53.85 m LIGHTING SCHEMATIC DIAGRAM - SW, NW DIAPHRAGM

(SHOWN FOR CIRCUIT #UP210-1B-3 ONLY
SEE TABLE 3 AND TABLE 4 FOR OTHER CIRCUITS)

TABLE 3 (SW DIAPHRAGM)

Location At Tower Grating Elevation	Lighting At SW Tower Diaphragm CKT. Number	3-Way Switches CKT. Number	Receptacle CKT. Number
Elev 53.0	UP210-1B-3	UP210-1B-3	
Elev 56.0	UP210-1B-3		UP210-1B-4
Elev 59.0	UP210-1B-3		
Elev 62.0	UP210-1B-3		
Elev 65.0	UP210-1B-3		UP210-1B-4
Elev 68.0	UP210-1B-3		
Elev 71.0	UP210-1B-3		UP210-1B-4
Elev 74.0	UP210-1B-3		
Elev 77.0	UP210-1B-3		UP210-1B-4
Elev 80.75	UP210-1B-3		UP210-1B-4
Elev 85.25	UP210-1B-3		
Elev 89.0	UP210-1B-3	UP210-1B-3	
	UP210-1B-5 (SE)	UP210-1B-5 (SE)	UP210-1B-6
Elev 92.5	UP210-1B-1	UP210-1B-1	
Elev 95.5	UP210-1B-1		
Elev 99.0	UP210-1B-1		UP210-1B-6
Elev 102.5	UP210-1B-1		
Elev 105.5	UP210-1B-1		UP210-1B-6
Elev 109.0	UP210-1B-1		
Elev 111.67	UP210-1B-1		
Elev 116.33	UP210-1B-1		UP210-1B-6
Elev 119.0	UP210-1B-1		
Elev 123.0	UP210-1B-1		
Elev 127.0	UP210-1B-1		
Elev 131.0	UP210-1B-1		
Elev 135.0	UP210-1B-1		
Elev 139.0	UP210-1B-1	UP210-1B-1	UP210-1B-6

TABLE 4 (NW DIAPHRAGM)

Location At Tower Grating Elevation	Lighting At NW Tower Diaphragm CKT. Number	3-Way Switches CKT. Number	Receptacle CKT. Number
Elev 53.0	UP210-1B-9	UP210-1B-9	
Elev 56.0	UP210-1B-9		UP210-1B-10
Elev 59.0	UP210-1B-9		
Elev 62.0	UP210-1B-9		
Elev 65.0	UP210-1B-9		UP210-1B-10
Elev 68.0	UP210-1B-9		
Elev 71.0	UP210-1B-9		UP210-1B-10
Elev 74.0	UP210-1B-9		
Elev 77.0	UP210-1B-9		UP210-1B-10
Elev 80.75	UP210-1B-9		UP210-1B-10
Elev 85.25	UP210-1B-9		
Elev 89.0	UP210-1B-9	UP210-1B-9	
	UP210-1B-11	UP210-1B-11	UP210-1B-12
Elev 92.5	UP210-1B-11		
Elev 95.5	UP210-1B-11		
Elev 99.0	UP210-1B-11		UP210-1B-12
Elev 102.5	UP210-1B-11		
Elev 105.5	UP210-1B-11		UP210-1B-12
Elev 109.0	UP210-1B-11		
Elev 111.67	UP210-1B-11		
Elev 116.33	UP210-1B-11		UP210-1B-12
Elev 119.0	UP210-1B-11		
Elev 123.0	UP210-1B-11		
Elev 127.0	UP210-1B-11		
Elev 131.0	UP210-1B-11		
Elev 135.0	UP210-1B-11		
Elev 139.0	UP210-1B-11	UP210-1B-11	UP210-1B-12

SHEET NOTES:

1. 2#10, 1#10 G AWG single conductors.
2. Conductors spliced.
3. Light switch shall be rated 30 A for CKT #UP210-1B-1 and CKT #UP210-1B-11.

NOTES:

1. References:
   - For utility panel schedule, see sheet E-280.
   - For circuit, conduit and cable tray schedules, see sheets starting at E-401.
   - For typical tower ladder platform lighting and power plans, see sheets E-284 & E-284A.

REGISTERED PROFESSIONAL ENGINEER FADI WALIEDDINE No. 11465 Exp. 12/31/2009 ELECTRICAL STATE OF CALIFORNIA

FOR REVISION ONLY

REQUEST FOR INFORMATION NOT ADDRESSED IN THIS CCO REMAIN IN FORCE

MARK	DATE	DESCRIPTIONS	BY	CH'D	CCO#
1	09/18/09	TOWER UTILITY PANELS	JS TW	RG FW	70

REVISIONS

CONTRACT CHANGE ORDER NO._____
SHEET_____ OF_____

DETAILS
TOWER AND SUSPENSION CABLE 120 V PIER LIGHTING WIRING DIAGRAM

NO SCALE

E-275

CALCULATED/ DESIGNED BY	FK	DATE 10/01	REVISED BY
CHECKED BY	EDC	11/01	DATE REVISED

DESIGN OVERSIGHT
BEHZAD GOLEMOHAMMADI

STATE OF CALIFORNIA - DEPARTMENT OF TRANSPORTATION
Caltrans

LAST REVISION 00-00-00
DATE PLOTTED => 12/10/2009
TIME PLOTTED => 3:32:57 PM

FOR REDUCED PLANS ORIGINAL SCALE IS IN MILLIMETERS 0 20 40 60 80

DGN FILE =>t:\13103\ms\pse\SAS Struc\CCO\SAS CCO70\2009-12-02 issued for Submittal\04-0120f1_0280R01.dgn
USERNAME =>llorico

CU 04251 | EA 0120F1