DIST	COUNTY	ROUTE	KILOMETER POST TOTAL PROJECT	SHEET No	TOTAL SHEETS
04	SF	80	13.2/13.9	271 S6	1204

REGISTERED ELECTRICAL ENGINEER DATE

PLANS APPROVAL DATE

REGISTERED PROFESSIONAL ENGINEER FADI WALIEDDINE No. 11465 Exp. 12/31/2009 ELECTRICAL STATE OF CALIFORNIA

PB AMERICAS, Inc.
A Parsons Brinckerhoff Company
303 Second St., Suite 700N
San Francisco, CA 94107-1317

The State of California or its officers or agents shall not be responsible for the accuracy or completeness of electronic copies of this plan sheet.

Caltrans now has a web site! To get to the web site, go to http://www.dot.ca.gov

Caltrans Metric

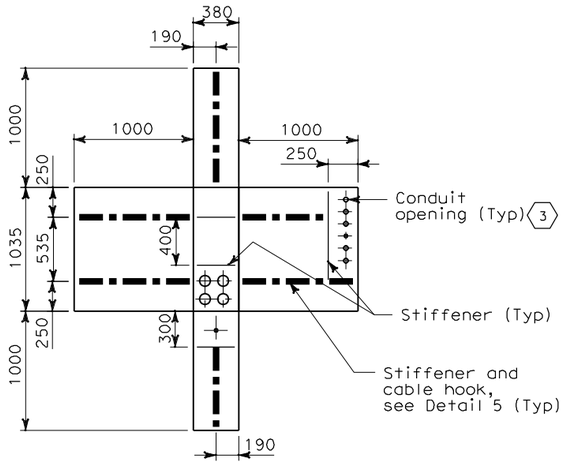

DETAIL 1
PULL BOX A - EXPLODED PLAN VIEW FROM THE INSIDE (1)

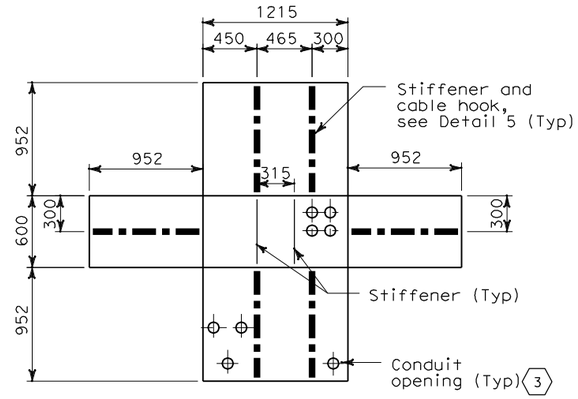

DETAIL 2
PULL BOX B - EXPLODED PLAN VIEW FROM THE INSIDE (1)

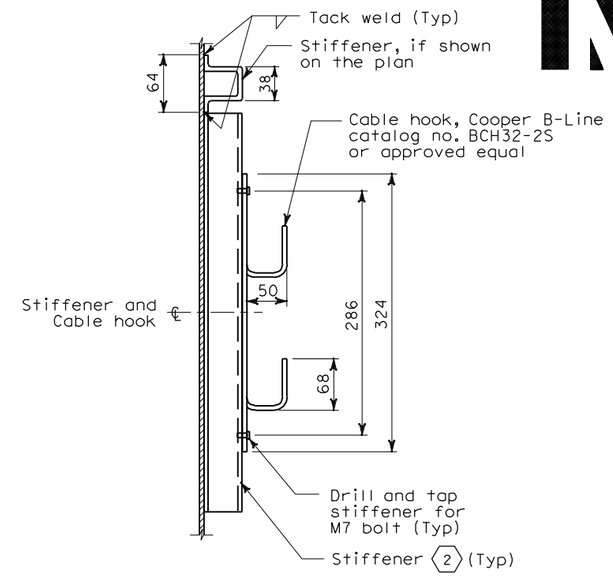

DETAIL 5
STIFFENER AND CABLE HOOK ELEVATION VIEW

SHEET NOTES

(1) Furnish and install stiffeners and cable hooks around the inside walls of pull box. Provide minimal distance between pull box edge and stiffener.

(2) The specified location and quantity of stiffeners represents only the recommended location for attaching the cable hooks. Stiffeners with cable hooks shall be able to withstand a minimum total weight of 60 kg. Additional stiffeners may be installed per the fabricator's discretion to maintain the integrity of the box based on the form and shape.

(3) For actual location of conduit openings, see sheet E-264A.

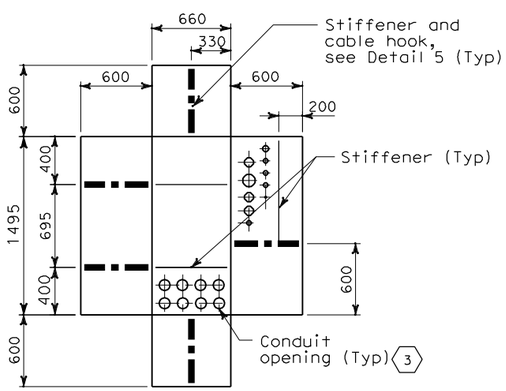

DETAIL 3
PULL BOX C - EXPLODED PLAN VIEW FROM THE INSIDE (1)

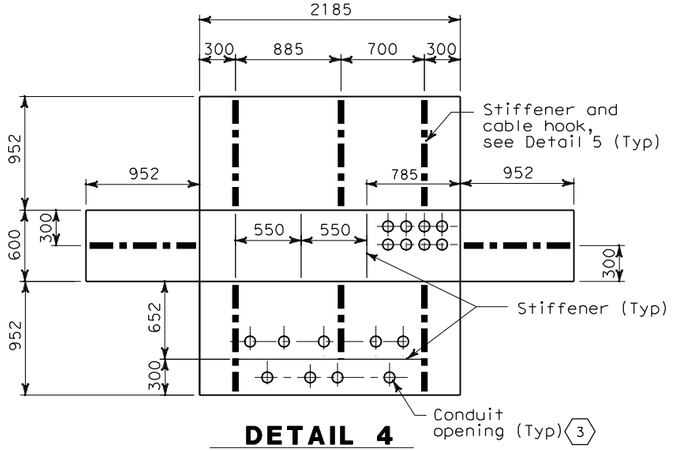

DETAIL 4
PULL BOX D - EXPLODED PLAN VIEW FROM THE INSIDE (1)

NOTES:

1. References:
   - For plan and additional notes, see sheet E-264A.
   - For pull box plan and elevation view, see sheet E-264H.

REQUEST FOR INFORMATION NOT ADDRESSED IN THIS CCO REMAIN IN FORCE

MARK	DATE	DESCRIPTIONS	BY	CH'D	CCO#
0	09/18/09	TOWER UTILITY PANELS	RSB	RG FW	70

REVISIONS

CONTRACT CHANGE ORDER NO._____
SHEET_____ OF_____

DETAILS
TOWER AND SUSPENSION CABLE
TOWER POWER AND LIGHTING
NO SCALE

E-264G

THIS PLAN ACCURATE FOR ELECTRICAL WORK ONLY.

ALL DIMENSIONS ARE IN MILLIMETERS UNLESS OTHERWISE SHOWN.

DESIGN OVERSIGHT: BEHZAD GOLEMOHAMMADI

STATE OF CALIFORNIA - DEPARTMENT OF TRANSPORTATION

Caltrans

DATE	REVISED BY	DATE REVISED

CALCULATED/DESIGNED BY | CHECKED BY

LAST REVISION 00-00-00 | DATE PLOTTED => 12/10/2009 | TIME PLOTTED => 3:28:33 PM

FOR REDUCED PLANS ORIGINAL SCALE IS IN MILLIMETERS 0 20 40 60 80

DGN FILE =>t:\13103\ms\pse\SAS Struc\CCO\SAS CC070\2009-12-02 issued for Submittal\04-0120f1_0271S06.dgn
USERNAME =>llorico

CU 04251 | EA 0120F1