| DIST | COUNTY | ROUTE | KILOMETER POST TOTAL PROJECT | SHEET No | TOTAL SHEETS |
|---|---|---|---|---|---|
| 04 | SF | 80 | 13.2/13.9 | 271 S3 | 1204 |

REGISTERED ELECTRICAL ENGINEER DATE

PLANS APPROVAL DATE

REGISTERED PROFESSIONAL ENGINEER FADI WALIEDDINE No. 11465 Exp. 12/31/2009 ELECTRICAL STATE OF CALIFORNIA

PB AMERICAS, Inc.
A Parsons Brinckerhoff Company
303 Second St., Suite 700N
San Francisco, CA 94107-1317

*The State of California or its officers or agents shall not be responsible for the accuracy or completeness of electronic copies of this plan sheet.*

*Caltrans now has a web site! To get to the web site, go to http://www.dot.ca.gov*

Caltrans Metric

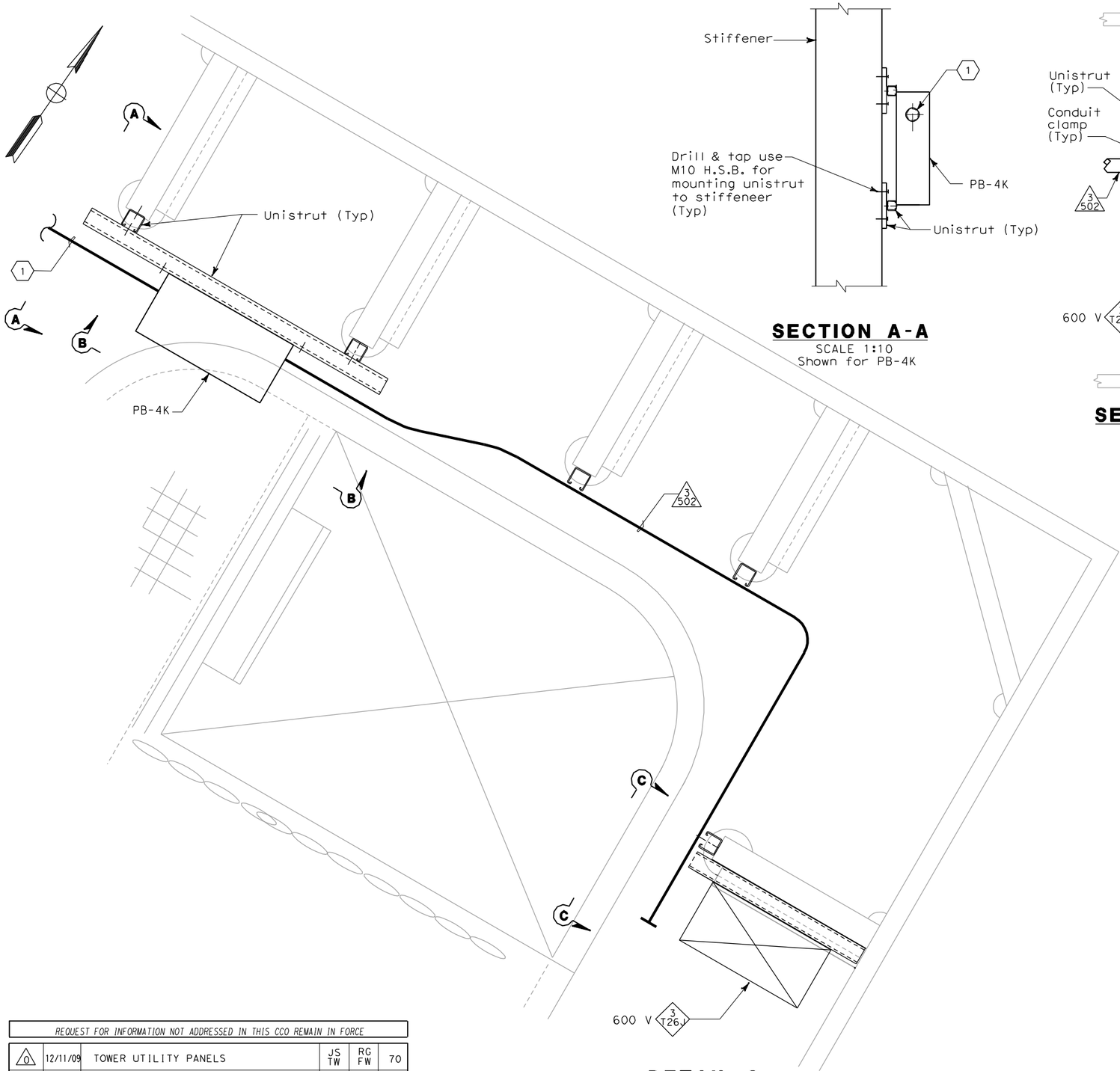


## DETAIL 3

SCALE 1:5

Plan at Elevation 53.85 m shown for PB-4K
Some conduits not shown for clarity




## SECTION A-A

SCALE 1:10
Shown for PB-4K

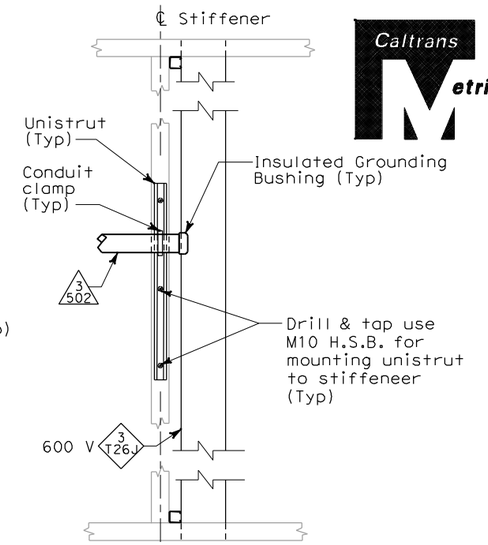


## SECTION C-C

SCALE 1:10

## SHEET NOTES:

1. Numbers and sizes of conduits are field route to lights, receptacles and switches. See sheets E-284 and E-284A for conduit information.

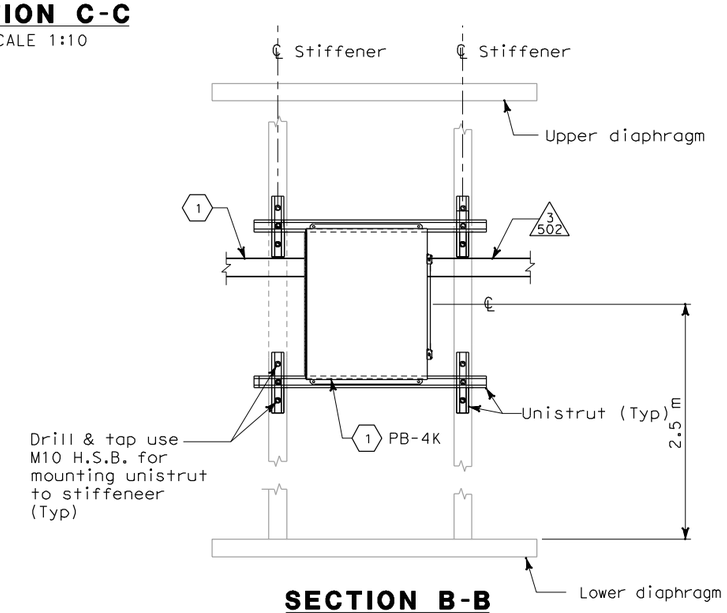


## SECTION B-B

SCALE 1:10
Shown for PB-4K
Light and receptacle distribution box detail typical stiffener location shown for SE. NW similar and SW and NE are opposite hand.

| REQUEST FOR INFORMATION NOT ADDRESSED IN THIS CCO REMAIN IN FORCE | | | | | |
|---|---|---|---|---|---|
| 0 | 12/11/09 | TOWER UTILITY PANELS | JS TW | RG FW | 70 |
| MARK | DATE | DESCRIPTIONS | BY | CH'D | CCO# |
| REVISIONS | | | | | |

CONTRACT CHANGE ORDER NO._____
SHEET_____ OF_____

THIS PLAN ACCURATE FOR ELECTRICAL WORK ONLY.

ALL DIMENSIONS ARE IN MILLIMETERS UNLESS OTHERWISE SHOWN.

# DETAILS
## TOWER AND SUSPENSION CABLE TOWER POWER AND LIGHTING

SCALE AS NOTED

**E-264D**

| CALCULATED/ DESIGNED BY | FK | DATE 10/01 | REVISED BY |
|---|---|---|---|
| CHECKED BY | EDC | 11/01 | DATE REVISED |

DESIGN OVERSIGHT
BEHZAD GOLEMOHAMMADI

STATE OF CALIFORNIA - DEPARTMENT OF TRANSPORTATION
Caltrans

LAST REVISION 00-00-00
DATE PLOTTED => 12/10/2009
TIME PLOTTED => 3:26:36 PM

FOR REDUCED PLANS ORIGINAL SCALE IS IN MILLIMETERS 0 20 40 60 80

DGN FILE =>t:\13103\ms\pse\SAS Struc\CCO\SAS CCO70\2009-12-02 issued for submittal\04-0120f1_0271S03.dgn
USERNAME =>llorico

CU 04251 EA 0120F1