DIST	COUNTY	ROUTE	KILOMETER POST TOTAL PROJECT	SHEET No	TOTAL SHEETS
04	SF	80	13.2/13.9	91R2	1204

REGISTERED ELECTRICAL ENGINEER 12/19/02 DATE

12-6-04
PLANS APPROVAL DATE

REGISTERED PROFESSIONAL ENGINEER JENS ERLINGSSON No. 8249 Exp. 9/30/06 ELECTRICAL STATE OF CALIFORNIA

PB POWER, Inc.
A Parsons Brinckerhoff Company
303 Second St., Suite 700N
San Francisco, CA 94107-1317

The State of California or its officers or agents shall not be responsible for the accuracy or completeness of electronic copies of this plan sheet.

Caltrans now has a web site! To get to the web site, go to http://www.dot.ca.gov

Caltrans Metric

REQUEST FOR INFORMATION NOT ADDRESSED IN THIS CCO REMAIN IN FORCE

MARK	DATE	DESCRIPTIONS	BY	CH'D	CCO#
2	09/18/09	TOWER UTILITY PANELS	JS	FW	70
1	02/19/08	ELECTRICAL MODIFICATIONS	MP EL	RR	42

REVISIONS

CONTRACT CHANGE ORDER NO. 70
SHEET 3 OF 45

SYMBOLS

(See ES-1A and ES-1B for Additional Standard Symbols)

LAYOUT PLAN

- Barrier Pull Box, for type and size, see Pull Box Schedule
- PB-2A — Pull Box PB-2A for type and size, see Pull Box Schedule
- Conduit Coupling
- A — Equipment or Material Designation A=Sequential description
- 1 — Sheet Notes, applicable only to the Drawing 1=Sequential number
- 1 — Project Notes, Applicable for all Drawings 1=sequential number
- J — Junction Box, Conduit Fitting
- Electrical Equipment or Indicated on Plan Drawings
- Pole Mounted Lighting Fixture- See Lighting Pole Schedule for Type and Quantity
- Fluorescent Lighting Fixture
- Compact Fluorescent Lighting Fixture, Ceiling Mounted or main cable and suspender base metal halide lighting fixture
- Compact Fluorescent Lighting Fixture Wall Mounted
- Soffit Lighting Fixture or tower marker light
- G — Navigation Channel Marker Light - Green Color
- R — Navigation Pier Marker Light - Red Color
- A1 A2 — Aviation Lighting
- F — Fog Detector
- F — Fog Horn
- Pole Flood Light
- Single Receptacle, 20 A, 125 V, Straight blade, with deep single gang weatherproof and threaded cap
- GFCI WP — Duplex Receptacle, 125 V, 20 A
  MH=450 mm above floor unless noted
  GFCI=Ground Fault Circuit Interrupter
  WP=Weatherproof
- $a WP — Single Pole Switch, 120/277 V, 20 A
  a - indicates Fixtures controlled
  WP - Weatherproof Cover
  MH - 1400 mm unless noted
- $3a WP — Three-way switch, 120/277 V, 20 A (or 30 A) 2
  a - indicates Fixtures controlled
  WP - indicates Weatherproof Cover
  MH - 1400 mm unless noted
- $4a WP — Four-way switch, 120/277 V, 20 A
  a - indicates Fixtures controlled
  WP - indicates Weatherproof Cover
  MH - 1400 mm unless noted
- 30 A — Disconnect Switch 30 A-Frame size
- Conduit turned up
- Conduit turned down
- Conduit or Cable run, exposed
- Conduit run concealed in wall, concrete barrier, slab or routed underground duct bank
- Combination Expansion - Deflection fittings
- Flexible Conduit
- CT — Cable Tray
- Cable Tray
- Cables or Conduit down to Equipment (see plan for conduit number)

- Call Box, State furnished
- Ground Bare Copper Wire, Stranded
- Cable To Cable Exothermic Type Ground Connections
- Cable Ground Connection to Equipment, Compression Type
- Cable with Pigtail Ground Connections (see plan for length)

TRAFFIC OPERATIONS SYSTEMS (TOS)

- CCTV Camera (Mounted at Lighting Pole)
- Changeable Message Sign
- Preformed Loops
- Microwave Vehicle Detection Sensor (Mounted at Lighting Pole)
- Ramp Meter Signal

SINGLE LINE DIAGRAM

200/5 MRCT 3 — MM — SSPP — 67 — 67N
Microprocessor protective relay
MM = Metering Module
SSPP = Solid State Protective Package
67,67N = Directional Overcurrent Relay
MRCT = Multi Ratio Current Transformer
200/5 = Current Amp/Ratio
3 = Quantity

1200 A / 500 MVA — N.C.(or N.O.) — 52 — 52-11N
Vacuum Circuit Breaker, (Drawout Type)
1200 A = Rating
500 MVA = Nominal Interrupting Class
52 11N = Assigned Breaker Number
N.C. = Normally Closed
N.O. = Normally Open

600-800 A / 42000 — 52S-1 E.O.
800/5 3 — L,S,G
Air Circuit Breaker (Drawout Type)
600-800 A = Rating
42000 = Interrupting Current
E.O. = Electrically Operated
52S-1 = Assigned breaker Number
800/5 = Current Transformer Setting
3 = Quantity
Solid state Trip Device
L = Long Time Delay
S = Short Time Pick up/Delay
G = Ground Fault pick up/Delay

750 kVA 12.47 kV 480 V
Transformer, Distribution, Dry Type
12.47 kV = Delta Primary
480 V = Wye Secondary
750 kVA = Size

MCP 2 or 30 A
Combination Motor Starter, Drawout Type
MCP = Motor Circuit Protector
2 = Starter NEMA Size
30 A = Contactor Rating

30 A
Safety Switch,
30 A = Frame Size

3
Rotating Motor
3 = kW Rating

50 AT / 150 AF
Molded Case Circuit Breaker, Drawout Type
50 AT = Trip Rating
150 AF = Frame Size

Package Equipment or Panelboard

12 kV-120 V
Potential Transformer
Connected Open Delta

800/5 3
Current Transformer
800/5 = Current AMP/Ratio
3 = Quantity

Stress Relief Cable Connection

or
Fuse

ELEMENTARY/CONNECTION DIAGRAMS

- Bk W — Signal Cable with Shield
- Contact, Normally open
- Contact, Normally Closed
- M or — Relay, Mechanical
  M = Motor
  C = Contactor
  42 = Running Circuit Breaker
  X or Y = Auxiliary
  R = Industrial
  TD = Time Delay
  PEC = Photo Electric Control
- OL — Motor Starter Overload Relay Thermal Bimetallic Element (OL-Overload)
- ON/OFF Switch
- DC Batteries
- AC/DC Inverter (Battery Charger/Rectifier)
- End Resistor and Capacitor
- Photoelectric Sensor
- 6 7 — Communication Cable Noise Suppressor
- Terminal Block
- Duplex Receptacle
- Cabinet Fluorescent Light

REGISTERED PROFESSIONAL ENGINEER MARRELL FUMIO TAKAHASHI No. E 8651 Exp. 9/30/2010 ELECTRICAL STATE OF CALIFORNIA

FOR REVISION ONLY 1

REGISTERED PROFESSIONAL ENGINEER FADI WALIEDDINE No. 11465 Exp. 12/31/2009 ELECTRICAL STATE OF CALIFORNIA

FOR REVISION ONLY 2

DEVICE NUMBER DEFINITIONS

27B	12.47 kV Bus Undervoltage Relay
27D	DC Undervoltage Relay
27F	Feeder Undervoltage Relay
27UV	480 V Bus Undervoltage Relay
42	Running Circuit Breaker
43/R	Manual Transfer / Remote
43/L	Manual Transfer / Local
49	Thermal Relay
50	Instantaneous Overcurrent Relay
51	AC Time Overcurrent Relay
51/51N	Phase and Ground Fault Time Overcurrent Relay
52	AC Circuit Breaker
67	AC Directional Overcurrent Relay
67N	AC Directional Ground Overcurrent Relay
86	Lock-Out Relay
88	Auxiliary Motor

ELECTRICAL SYMBOLS

NO SCALE

E-6

REVISED BY	DATE REVISED

CALCULATED/DESIGNED BY	DATE 08/02
AB	09/02
CHECKED BY	JW

DESIGN OVERSIGHT
BEHZAD GOLEMOHAMMADI

STATE OF CALIFORNIA - DEPARTMENT OF TRANSPORTATION
Caltrans

LAST REVISION 00-00-00
DATE PLOTTED => 12/10/2009
TIME PLOTTED => 3:16:23 PM

FOR REDUCED PLANS ORIGINAL SCALE IS IN MILLIMETERS 0 20 40 60 80

DGN FILE =>t:\13103\ms\pse\SAS Struc\CCO\SAS CC070\2009-12-02 issued for Submittal\04-0120f1_0091R02.dgn
USERNAME =>llorico

CU 04251 | EA 0120F1

DIST	COUNTY	ROUTE	KILOMETER POST TOTAL PROJECT	SHEET No	TOTAL SHEETS
04	SF	80	13.2/13.9	93R5	1204

REGISTERED ELECTRICAL ENGINEER 12/19/02 DATE

12-6-04
PLANS APPROVAL DATE

REGISTERED PROFESSIONAL ENGINEER JENS ERLINGSSON No. 8249 Exp. 9/30/06 ELECTRICAL STATE OF CALIFORNIA

PB POWER, Inc.
A Parsons Brinckerhoff Company
303 Second St., Suite 700N
San Francisco, CA 94107-1317

The State of California or its officers or agents shall not be responsible for the accuracy or completeness of electronic copies of this plan sheet.

Caltrans now has a web site! To get to the web site, go to http://www.dot.ca.gov

Caltrans Metric

REGISTERED PROFESSIONAL ENGINEER FADI WALIEDDINE No. 11465 Exp. 12/31/2009 ELECTRICAL STATE OF CALIFORNIA

FOR REVISION ONLY 4 5

REGISTERED PROFESSIONAL ENGINEER MAXWELL FUMIO TAKATA No. E 8651 Exp. 9/30/2008 ELECTRICAL STATE OF CALIFORNIA

FOR REVISION ONLY 1

REGISTERED PROFESSIONAL ENGINEER S. A. ESTOQUE, JR. No. E-10151 Exp. 12/31/2009 ELECTRICAL STATE OF CALIFORNIA

FOR REVISION ONLY 2 3

REQUEST FOR INFORMATION NOT ADDRESSED IN THIS CCO REMAIN IN FORCE

MARK	DATE	DESCRIPTIONS	BY	CH'D	CCO#
5	12/11/09	TOWER UTILITY PANELS	JS TW	RG FW	70
4	10/10/08	LIGHTING REVISIONS	RY AG	RG FW	43
3	09/24/08	CABLE ELECTRICAL	RR AG	RG SE	72
2	02/25/08	CABLE TRAY CHANGES	RG	SE	42S1
1	02/19/08	ELECTRICAL MODIFICATIONS	MP EL	RR	42

REVISIONS

CONTRACT CHANGE ORDER NO. 70
SHEET 4 OF 45

TRAFFIC OPERATIONS SYSTEMS (TOS)

AVO	Analog Video Output
CCR	Camera Control Receiver
CCU	Camera Control Unit
CIA	Controller Interface Assembly
COMM	Communication
FDU	Fiber Distribution Unit
F/O	Fiber Optic
FODM	Fiber Optic Data Modem
FDC	Fiber Optic Drop Cable
FPC	Fiber Optic Pigtail Cable
FSC	Fiber Splice Closure
FTC	Fiber Optic Trunkline Cable
IF	Input File
MVDS	Microwave Vehicle Detection Sensor
PDA	Power Distribution Assembly
PL	Preformed Loop Detection Station
SCA	Serial Cable Assembly
SMFO	Single Mode Fiber Optic
TB	Terminal Box
TSC	Trunkline Splice Closure
TVCP	CCTV Camera Control Power Cable
TVC	CCTV Camera Control Cable
TVL	CCTV Camera Video Cable
TVP	CCTV Camera Power Cable
VTDD	Video Transmitter Duplex Data

PROJECT NOTES

1. 27C, 2#12 + #12 G.
2. 27C, 2#10 + #10 G.
3. 27C, 4#10 + #10 G.
4. 27C, 3#10 + #10 G.
5. 27C (Type 4), 2#12 + #12 G.
6. 27C (Type 4), 2#10 + #10 G.
7. 41C, 2-6 pairs #18, IS/OA.
8. 78C, 50 Pairs #18, IS/OA.
9. 27C, 3/C #6 + #8G.
10. 21C, 2-1 pair #18 (for Call Box signal) shielded pairs and overall shield.
11. 21C, 3#12 (for Call Box power).
12. 21C, (4) 1 pair #18 (for Call Box signal). Part of (2) 1-2 pairs #18, shielded pairs and overall shield.
13. 78C, 2#2 + #6 G and 2#10 + #10 G (for CMS Power).
14. 78C, Harness #4 and Harness #5 (for CMS Signal).
15. 41C, Cable type TVP and TVCP (for CCTV Power).
16. 41C, Cable type TVC and TVL (for CCTV Control Signal).
18. 41C, Cable type MVDS DLC (for MVDS Signal).
20. 78C, Cable type 10 DLC (for Preformed Loop Signal).
21. 27C (Liquidtight flexible metal conduit) 6#10 + #10 G.
22. 27C (Liquidtight flexible metal conduit) 3#10 + #10 G.
23. 27C, 7#10 + #10 G.
24. 27C, 6#10 + #10 G.

PROJECT NOTES (Continuation)

25. 27C, 7#10 + #10 G.
26. 41C, 3#6 + #8 G.
27. 41C, 3#8 + #10 G.
28. 21C, PVC coated - 2#10 + #10 G.
29. 21C, PVC coated, 3#12 (for Call Box Power).
30. 500 kcmil Bare Copper Wire.
31. 250 kcmil Bare Copper Wire.
32. #4/0 Bare Copper Wire.
33. #2 Bare Copper Wire.
34. 41C, 3#6 + #8 G, 3#8 + #10 G.
35. 41C, 6#8 + #10 G.
36. 21C, PVC coated, 1-2 pairs #18 (For Call Box signal).
37. Metal clad type cable with PVC overall jacket 3/C #10 (for Bike Path lighting).
38.
39. Metal clad type cable with PVC overall jacket 3/C #12 (for Call Box signal).
40. 78C, Cable Type A Fiber Optic.
41. 21C, (Liquidtight flexible metal conduit) 2#10 + 10 G.
42. 27C, 2#12 + #12G, 2#10 + #10G.
43. 21C, (Liquidtight flexible metal conduit) 2#12 + 12 G.
44. 41C, 2#12 + #12 G, 6#10 + #10 G.
45. 27C, 2#12 + #12 G, 4#10 + #10 G.
46. 27C, Liquidtight flexible metal conduit, 4#10 + #10G.
47. 41C, Liquidtight flexible metal conduit, (MVDS DLC).
48. 27C, 3#6 + #8G. Liquidtight flexible metal conduit.
49. 21C, PVC coated, 2#10 + #10G & 2/C #14
50. 21C Liquidtight flexible metal conduit 2#10 + #10G, 2/C #14
51. 41C Liquidtight flexible metal conduit 3#6 + #8G, 2/C #14
52. 41C, Liquidtight flexible metal conduit 4#10 + 2#10 G
53. 41C, PVC coated 4#10 + 2#10 G
54. 27C, 4#10 + 2#10 G.
55. 41C, 6#10 + 2#10 G 2#12 + #12 G
56. 21C, 2#10 + #10 G
57. 41C, 6#10 + 2#10 G
58. 21C, 2#12 + #12 G
59. 21C, 3#10 + #10 G
60. 41C, 8#10 + 3#10 G 2#12 + #12 G 5
61. 27C, 3#10 + 2#10 G 2#12 + #12 G
62. 41C, 6#10 + 3#10 G
63. 41C, 8#10 + 3#10 G

GENERAL NOTES

1. Conduit routing is diagrammatic. Pull box locations shall be located as shown on plan drawings. The Contractor shall provide additional pull boxes as required. Exact locations of equipment and devices may be adjusted depending on field conditions or by the Engineer.
2. Minimum size of conduits shall be 21 mm. Exposed conduits shall be PVC coated rigid galvanized steel, and conduits located inside girder shall be rigid galvanized steel.
3. Conduit fittings for 78 mm conduits and larger shall have a 610 mm minimum bending radius.
4. All conduits, including spares, shall be provided with pull wires prior to cable installations.
5. All equipment and devices shall be provided with nameplate tags per drawings.
6. All feeders and branch circuits shall be provided with ground wire.
7. 15 kV splice boxes shall be installed as shown and permanently marked "DANGER-HIGH VOLTAGE-KEEP OUT". The letters shall be block type and at least 50 mm in height.
8. The Contractor shall label all conductors and cables per wiring diagrams.
9. Padlocks shall be installed on all cabinets located on the platforms to prevent unauthorized access.
10. Call boxes will be State-furnished. (The Contractor shall install and terminate conductors per wiring diagram.
11. Ladder type cable trays shall be installed for each 15 kV and 600 V systems.
12. Solid bottom cable trays shall be installed for each low level signals, CALTRANS communications, fiber optic systems, and for Non-Caltrans utilities.
13. For Strong Motion Detection System general notes, see sheet E-361.
14. All E sheets are accurate for electrical work only.
15. All dimensions are in millimeters unless otherwise shown.
16. All unused conductors inside pull boxes shall be taped and coiled.
17. "Similar" when shown on the plans means this detail is applicable to different structure and conduit sizes.
18. Electrical fixtures shall not be field welded to the box girders or crossbeams. All welding to the box girders and crossbeams shall be shown on the box girder and crossbeam shop drawings for review and approval by the Engineer.
19. All welding of electrical fixtures to the tower shall be shown on the tower shop drawings for review and approval by the Engineer.
20. All connections to steel elements of the self-anchored suspension bridge superstructure of electrical equipment and fixtures, including conduits, pull boxes, lighting fixtures, messenger cables and others, shall be shop welded or bolted. All connection details shall appear on the working drawings for review and approval by the Engineer.
21. Prior to ordering any cable tray support structures, the Contractor shall:
    - Refer to Structural sheets to determine the locations of cable tray support structures.
    - Determine, based upon field conditions, when and where to use cable tray vertical or horizontal bends, horizontal tees or reducers.
    - Refer to AS-sheets to determine the type of cable tray support to use based on field conditions.
    - Cable tray support structures shown on the AS-sheets are generic and may have to be adapted to suit field conditions.
    - All modifications to the cable tray support structures as shown on the AS-sheets shall be approved by the Resident Engineer.
22. All installation of electrical conduit, equipment or pull boxes shall be either shop welded or bolted.
23. All cable trays shall be securely anchored to support. Appropriate type of anchors (hold down brackets, hold down clamps or guides) shall be used to suit the cable tray type, location and supports. For similar attachment details, see TYPE I & II on E-122A and E-205A.
24. 5 Contractor shall seal all wall penetrations with conduit within the dehumidified area using a rubber pipeseal that will expand to fill the gap between the penetration sleeve and conduit to create a seal. Caulking (silicone caulk) shall not be used at these locations.

ELECTRICAL NOTES AND ABBREVIATIONS

E-8

CALCULATED/ DESIGNED BY	AB	DATE 08/02	REVISED BY
CHECKED BY	JW	09/02	DATE REVISED
			IAH 3/04

DESIGN OVERSIGHT
BEHZAD GOLEMOHAMMADI

STATE OF CALIFORNIA - DEPARTMENT OF TRANSPORTATION
Caltrans

FOR REDUCED PLANS ORIGINAL SCALE IS IN MILLIMETERS 0 20 40 60 80

DGN FILE =>T:\13103\MS\pse\SAS Struc\CCO\SAS CCO70\2009-12-02 Issued for Submittal\04-0120f1_0093R05.dgn
USERNAME =>llorico

CU 04251 EA 0120F1

LAST REVISION 00-00-00
DATE PLOTTED => 12/18/2009
TIME PLOTTED => 9:11:00 AM

DIST	COUNTY	ROUTE	KILOMETER POST TOTAL PROJECT	SHEET No	TOTAL SHEETS
04	SF	80	13.2/13.9	113 R2	1204

Jens Erlingsson 12/19/02
REGISTERED ELECTRICAL ENGINEER DATE

12-6-04
PLANS APPROVAL DATE

REGISTERED PROFESSIONAL ENGINEER JENS ERLINGSSON No. 8249 Exp. 9/30/06 ELECTRICAL STATE OF CALIFORNIA

PB POWER, Inc.
A Parsons Brinckerhoff Company
303 Second St., Suite 700N
San Francisco, CA 94107-1317

The State of California or its officers or agents shall not be responsible for the accuracy or completeness of electronic copies of this plan sheet.

Caltrans now has a web site! To get to the web site, go to http://www.dot.ca.gov

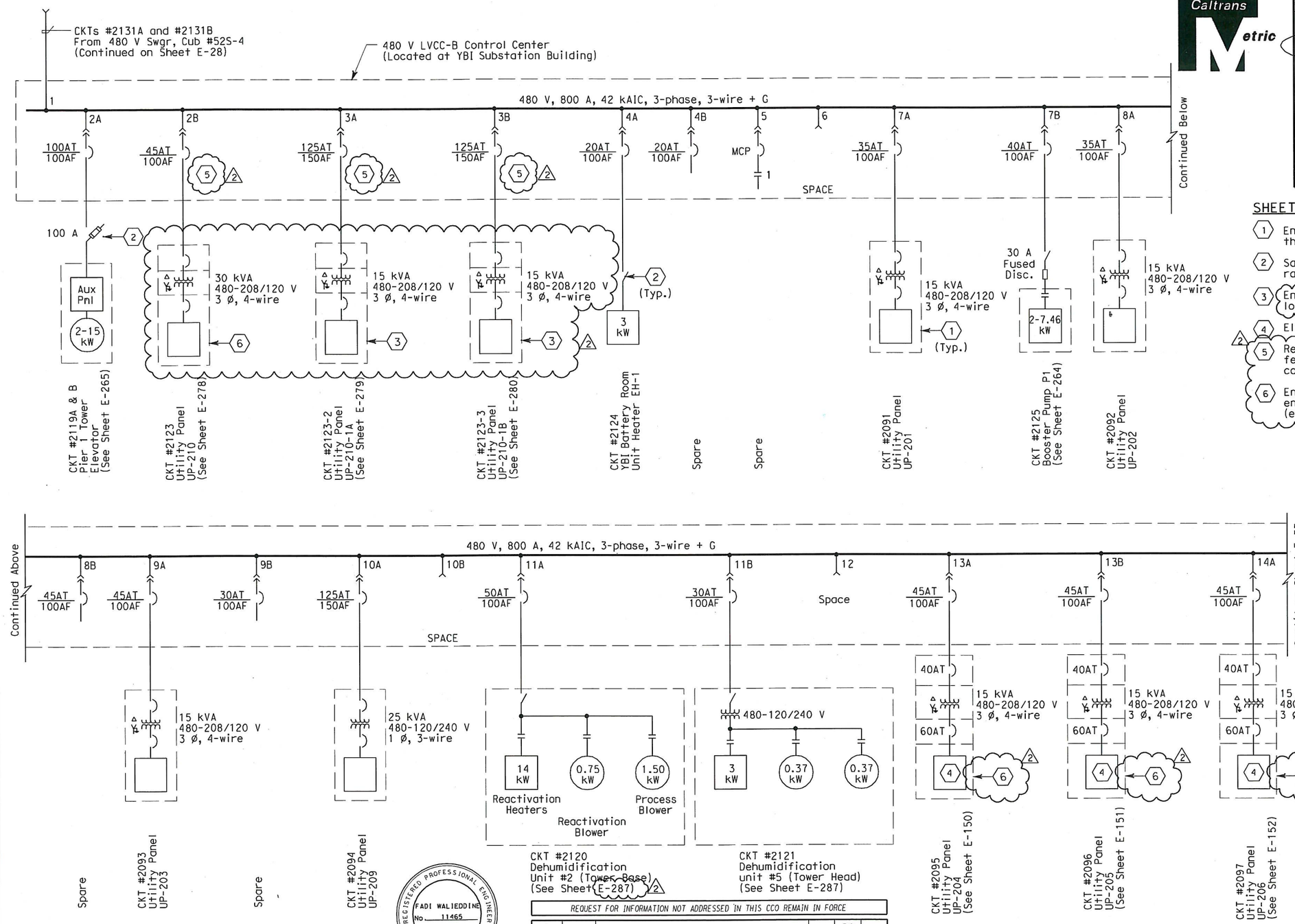

SHEET NOTES:

1. Enclosed in a fiberglass enclosure located on the service platform.
2. Safety disconnect switch shall be horsepower rated.
3. Enclosed in separate Nema type 12 enclosures located on the SAS main tower (elev 89.85).
4. Electrical Panel with Main Lugs only.
5. Revision to feeder circuit breaker rating and feeder conductor size accomplished by YBI-1 contract.
6. Enclosed in separate stainless steel Nema 4X enclosures located on the SAS main tower (elev. 53.85) and/or service platforms.

NOTES:

1. Single line diagram as shown does not represent physical separation of different contracts. Refer to other drawings for physical separation of different contracts.
2. The combination starter unit and thermal magnetic circuit breakers shall be suitable for and coordinated for 42,000 RMS system fault current.

REGISTERED PROFESSIONAL ENGINEER SYN YEE CHIN No. 18186 Exp. 09/30/2011 ELECTRICAL STATE OF CALIFORNIA

Syn Yee Chin
FOR REVISION ONLY
2

REGISTERED PROFESSIONAL ENGINEER FADI WALIEDDINE No. 11465 Exp. 12/31/2009 ELECTRICAL STATE OF CALIFORNIA

FOR REVISION ONLY
1

REQUEST FOR INFORMATION NOT ADDRESSED IN THIS CCO REMAIN IN FORCE

MARK	DATE	DESCRIPTIONS	BY	CH'D	CCO#
2	02/24/10	TOWER UTILITY PANELS	JS	RG SYC	70
1	03/30/09	SERVICE PLATFORM ELECTRICAL CHANGES	RR MP	RG FW	55

REVISIONS

CONTRACT CHANGE ORDER NO. 70
SHEET 5 OF 45

DETAILS
YBI SUBSTATION
480 V LVCC-B SINGLE LINE DIAGRAM
NO SCALE

E-32

REVISED BY	DATE REVISED
EJL	12/01

CALCULATED/DESIGNED BY	DATE 9-01
CHECKED BY	JE

DESIGN OVERSIGHT
BEHZAD GOLEMOHAMMADI

STATE OF CALIFORNIA - DEPARTMENT OF TRANSPORTATION
Caltrans

LAST REVISION 00-00-00
DATE PLOTTED => 2/25/2010
TIME PLOTTED => 5:03:49 PM

FOR REDUCED PLANS ORIGINAL SCALE IS IN MILLIMETERS 0 20 40 60 80

DGN FILE =>t:\13103\ms\pse\SAS Struc\CCO\SAS CCO70\2009-12-02 Issued for Submittal\04-0120f1_0113R02.dgn
USERNAME =>llorico
CU 04251
EA 0120F1

DIST	COUNTY	ROUTE	KILOMETER POST TOTAL PROJECT	SHEET No	TOTAL SHEETS
04	SF	80	13.2/13.9	142 R5	1204

REGISTERED ELECTRICAL ENGINEER 12/19/02 DATE

12-6-04
PLANS APPROVAL DATE

REGISTERED PROFESSIONAL ENGINEER JENS ERLINGSSON No. 8249 Exp. 9/30/06 ELECTRICAL STATE OF CALIFORNIA

PB POWER, Inc.
A Parsons Brinckerhoff Company
303 Second St., Suite 700N
San Francisco, CA 94107-1317

The State of California or its officers or agents shall not be responsible for the accuracy or completeness of electronic copies of this plan sheet.

Caltrans now has a web site! To get to the web site, go to http://www.dot.ca.gov

PULL BOXES

Location	Type	Pull Box Size	Enclosure Type	Nameplate Pull Box Cover	Remarks
Roadway Barrier	PB-Com			Low Voltage - Call Box	Caltrans standard ES-9C (PB-9A)
Roadway Barrier	PB-Ltg			600 V - Electrical	Caltrans standard ES-9C (PB-9)
Roadway and miscellaneous	PB-1B	304 L x 254 W x 127 D	NEMA 4X	600 V - Electrical	Located at main suspender cable
Roadway and miscellaneous	PB-1C	152 L x 152 W x 102 D	NEMA 4X	600 V - Electrical	Located at suspender brackets
Roadway	PB-1F	304 L x 304 W x 152 D	NEMA 4X	600 V - Electrical	Located at main suspender cable
Inside Girder Box	PB-2A	406 L x 254 W x 152 D	NEMA 12	600 V - Electrical	
Service Platform	PB-2B	762 L x 508 W x 203 D	NEMA 4X	600 V - Electrical	
Inside Girder Box	PB-2C	915 L x 610 W x 610 D	NEMA 12	600 V - Electrical	Electrical vault-embedded in conc. deck
Inside Girder Box	PB-2P	1067 L x 915 W x 305 D	NEMA 12	600 V - Electrical	Electrical vault-surface/pendant mounted
Inside Girder Box	PB-2L	152 L x 152 W x 102 D	NEMA 12	600 V - Electrical	For future light pipe and inside Piers E6W, E7W, and E8W.

PULL BOXES

Location	Type	Pull Box Size	Enclosure Type	Nameplate Pull Box Cover	Remarks
"E" Line Girder access Platform	PB-2D	457 L x 457 W x 203 D	NEMA 4X	600 V - Electrical	For Base Tower power and lighting
Inside Dehumidification #2 Area	PB-2E	203 L x 203 W x 102 D	NEMA 12	600 V - Electrical	For Base Tower Dehumidification #2 power
Tower Base-Elevator Enclosure	PB-2F	203 L x 203 W x 102 D	NEMA 12	600 V - Electrical	For Elevator pit motor power 5
Tower Walkway Platform, EL. 93.35 m	PB-2H	457 L x 457 W x 203 D	NEMA 4X	600 V - Electrical	For Power and Lighting
Elevator Enclosure-EL. 93.35 m	PB-2J	203 L x 203 W x 102 D	NEMA 4X	600 V - Electrical	For Power and Lighting
"E" Line Girder access Platform	PB-2K	305 L x 305 W x 152 D	NEMA 4X	600 V - Electrical	For Base Tower power and lighting
Tower Walkway Platform, EL. 53.0 m EL. 89.85 m, EL.127 m, EL. 139.85 m, EL. 156.75 m	PB-2R	203 L x 203 W x 102 D	NEMA 4X	600 V - Electrical	For Power - Booster Pump P1 at EL. 53.00 m & For Lighting at EL. 89.85 m, EL. 127.00 m, EL. 139.85 m, EL. 156.75 m 5
Tower Head Elev 158.00 m	PB-2S	762 L x 610 W x 305 D	NEMA 4X	600 V - Electrical	For Dehumidifier Unit #5 Power and Communications
Tower Elevation 53.85 m	PB-4E	914 L x 762 W x 406 D	NEMA 4X	600 V - Electrical	For Tower Power
Tower Shaft Lighting	PB-4H	305 L x 305 W x 152 D	NEMA 12	600 V - Electrical	For Tower shaft Ladder Lighting
Tower Shaft Lighting	PB-4J	406 L x 305 W x 152 D	NEMA 12	600 V - Electrical	For Tower shaft Ladder Lighting
Tower Shaft Lighting	PB-4K	508 L x 406 W x 152 D	NEMA 12	600 V - Electrical	For Tower shaft Ladder Lighting

2

SPLICE BOXES

Location	Type	Splice Box Size	Enclosure Type	Nameplate Splice Box Cover	Remarks
Inside Girder Box and Tower EL 63.0	PB-3A	1830 L x 915 W x 305 D	NEMA 12	Danger - High Voltage - Keep Out	
Inside Girder Box	PB-3B	813 L x 203 diameter	Cylindrical Housing	Fiber Optic	72 fibers to 12 fibers
Inside Girder Box	PB-3C	813 L x 203 diameter	Cylindrical Housing	Fiber Optic	72 fibers to 72 fibers

PANEL ENCLOSURES 1

Location	Type	Cabinet/Terminal Box Size	Enclosure Type	Nameplate Cabinet/Terminal Cover	Remarks
Service Platform	PB-6C	See Panel Layout	NEMA 4X	See Panel Layout on E-305	For Navigation Relay Cabinet
Service Platform	PB-7B	See Panel Layout	NEMA 4X	See Panel Layout on E-321	For Scada Communication Terminal Box
Service Platform	PB-7C	762 H x 508 W x 203 D	NEMA 4X	Caltrans Telephone	Enclosure only - For Telephone Terminal Box
Inside Girder Box	PB-7D	508 H x 406 W x 203 D	NEMA 4X	Caltrans Telephone	Enclosure only - For Telephone Terminal Box

SAS SUPERSTRUCTURE WB

Location	Type	Pull Box Size	Enclosure Type	Nameplate Pull Box Cover	Remarks
Inside Light Pole	PB-2N	152 L x 152 W x 102 D	NEMA 12	TOS-MVDS	Cable Termination
Tower Platform	PB-2M	305 L x 305 W x 152 D	NEMA 12	TOS-MVDS	Cable Termination
Inside Dehumidification #1 Area	PB-TOS	203 L x 203 W x 102 D	NEMA 4X	TOS-COM	Dehumidification Unit #1

Caltrans Metric

SHEET NOTES:

1. Panel enclosures shall be provided with padlock provisions.
2. See sheets E-284 and E-284A for locations of pull boxes. 5

REGISTERED PROFESSIONAL ENGINEER SYN YEE CHIN No. 18186 Exp. 09/30/2011 ELECTRICAL STATE OF CALIFORNIA

Syn Yee Chin
FOR REVISION ONLY
5

REGISTERED PROFESSIONAL ENGINEER MAXWELL FUMIO TAKATA No. E 8651 Exp. 9/30/2008 ELECTRICAL STATE OF CALIFORNIA

FOR REVISION ONLY
1

REGISTERED PROFESSIONAL ENGINEER FADI WALIEDDINE No. 11465 Exp. 12/31/2009 ELECTRICAL STATE OF CALIFORNIA

FOR REVISION ONLY
2 3 4

REQUEST FOR INFORMATION NOT ADDRESSED IN THIS CCO REMAIN IN FORCE

MARK	DATE	DESCRIPTIONS	BY	CH'D	CCO#
5	02/24/10	TOWER UTILITY PANELS	RB	RG SYC	70
4	08/03/09	ELECTRICAL WARNING SYSTEMS	RG	FW	61
3	03/30/09	SERVICE PLATFORM ELECTRICAL CHANGES	RR	RG FW	55
2	09/24/08	CABLE ELECTRICAL	RY AG	RG FW	72
1	02/19/08	ELECTRICAL MODIFICATIONS	MP EL	RR	42

REVISIONS

CONTRACT CHANGE ORDER NO. 70
SHEET 6 OF 45

DETAILS
SAS SUPERSTRUCTURE ROADWAY WESTBOUND PULLBOX SCHEDULES

E-83

DESIGN OVERSIGHT: BEHZAD GOLEMOHAMMADI

CALCULATED/DESIGNED BY: FK | CHECKED BY: BL | DATE 10/01 | 11/01 | REVISED BY | DATE REVISED

STATE OF CALIFORNIA - DEPARTMENT OF TRANSPORTATION
Caltrans

FOR REDUCED PLANS ORIGINAL SCALE IS IN MILLIMETERS 0 20 40 60 80

DGN FILE =>T:\13103\MS\pse\SAS Struc\CCO\SAS CCO70\2009-12-02 Issued for Submittal\04-0120f1_0142R05.dgn
USERNAME =>llorico

CU 04251 | EA 0120F1

LAST REVISION 00-00-00 | DATE PLOTTED => 2/26/2010 | TIME PLOTTED => 10:18:37 AM

DIST	COUNTY	ROUTE	KILOMETER POST TOTAL PROJECT	SHEET NO	TOTAL SHEETS
04	SF	80	13.2/13.9	263 R1	1204

Caltrans Metric

Jens Erlingsson 12/19/02
REGISTERED ELECTRICAL ENGINEER DATE

12-6-04
PLANS APPROVAL DATE

REGISTERED PROFESSIONAL ENGINEER JENS ERLINGSSON No. 8249 Exp. 9/30/06 ELECTRICAL STATE OF CALIFORNIA

PB POWER, Inc.
A Parsons Brinckerhoff Company
303 Second St., Suite 700N
San Francisco, CA 94107-1317

The State of California or its officers or agents shall not be responsible for the accuracy or completeness of electronic copies of this plan sheet.

Caltrans now has a web site! To get to the web site, go to http://www.dot.ca.gov

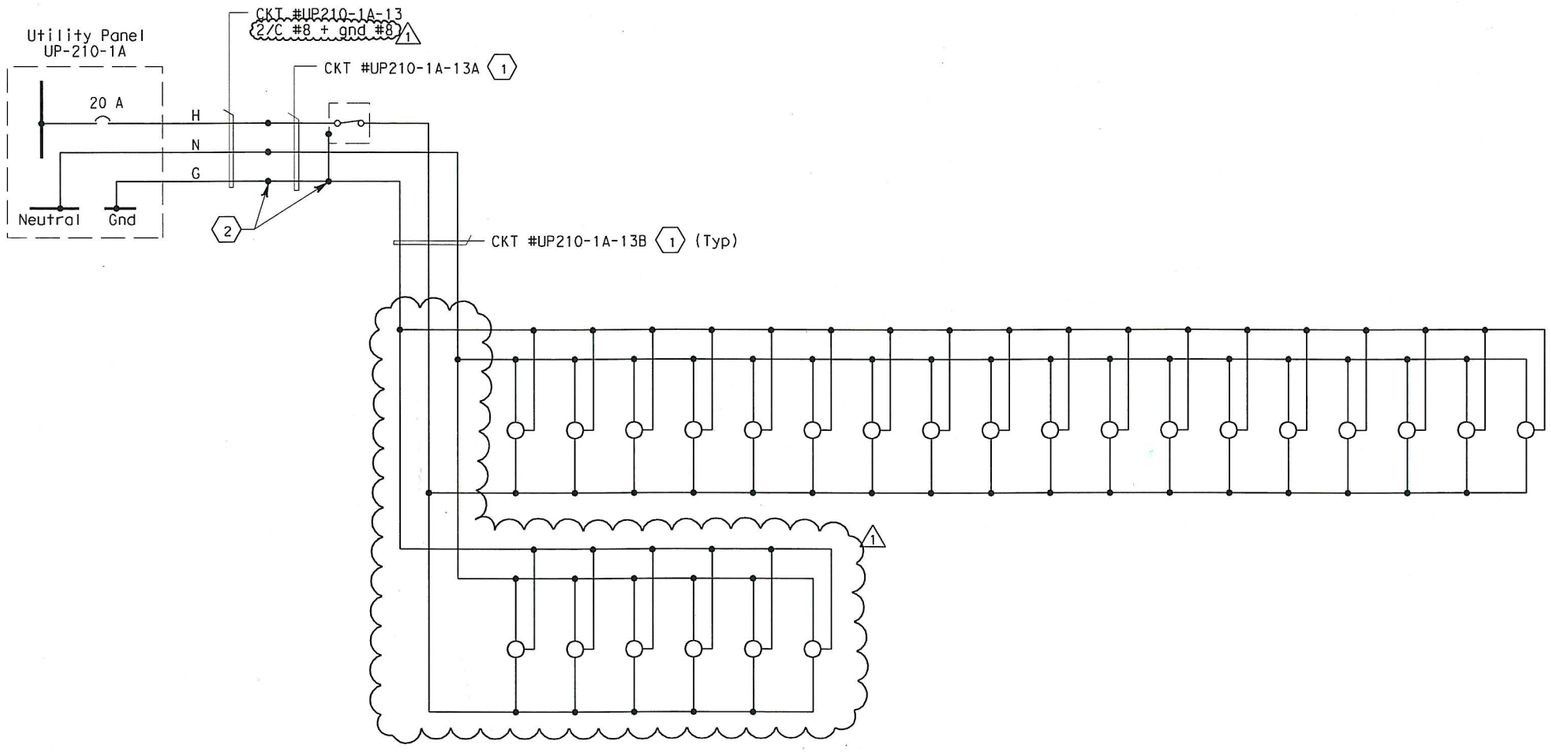

120 V TOWER PLATFORM LIGHTING AT EL 154.6 m TO 156.75 m

SHEET NOTES:

1. #10 AWG single conductors.
2. Conductors spliced inside pull box PB-2R located at El. 156.75 m. 1

NOTES:

1. References:
   - For utility panel schedule, see sheet E-279.
   - For conduit and cable tray schedules, see sheets starting at E-401.
2. Refer to Tower Power and Lighting Plan E-286 for light switch locations.

REGISTERED PROFESSIONAL ENGINEER FADI WALIEDDIN No. 11465 Exp. 12/31/2009 ELECTRICAL STATE OF CALIFORNIA

FOR REVISION ONLY
1

REQUEST FOR INFORMATION NOT ADDRESSED IN THIS CCO REMAIN IN FORCE					
1	12/02/09	TOWER UTILITY PANELS	SYC RB	RG FW	70
MARK	DATE	DESCRIPTIONS	BY	CH'D	CCO#
REVISIONS					

CONTRACT CHANGE ORDER NO. 70
SHEET 7 OF 45

DETAILS
TOWER AND SUSPENSION CABLE
120 V LIGHTING WIRING DIAGRAM
NO SCALE

E-253

CALCULATED/DESIGNED BY	FK	DATE 10/01	REVISED BY
CHECKED BY	EDC	11/01	DATE REVISED

DESIGN OVERSIGHT
BEHZAD GOLEMOHAMMADI

STATE OF CALIFORNIA - DEPARTMENT OF TRANSPORTATION
Caltrans

LAST REVISION 00-00-00
DATE PLOTTED => 12/10/2009
TIME PLOTTED => 3:22:24 PM

FOR REDUCED PLANS ORIGINAL SCALE IS IN MILLIMETERS 0 20 40 60 80

DGN FILE =>t:\13103\ms\pse\SAS Struc\CCO\SAS CCO70\2009-12-02 issued for Submittal\04-0120f1_0263R01.dgn
USERNAME =>llorico

CU 04251 | EA 0120F1

DIST	COUNTY	ROUTE	KILOMETER POST TOTAL PROJECT	SHEET No	TOTAL SHEETS
04	SF	80	13.2/13.9	264 R1	1204

REGISTERED ELECTRICAL ENGINEER 12/19/02 DATE

12-6-04
PLANS APPROVAL DATE

REGISTERED PROFESSIONAL ENGINEER JENS ERLINGSSON No. 8249 Exp. 9/30/06 ELECTRICAL STATE OF CALIFORNIA

PB AMERICAS, Inc.
A Parsons Brinckerhoff Company
303 Second St., Suite 700N
San Francisco, CA 94107-1317

The State of California or its officers or agents shall not be responsible for the accuracy or completeness of electronic copies of this plan sheet.

Caltrans now has a web site! To get to the web site, go to http://www.dot.ca.gov

Caltrans Metric

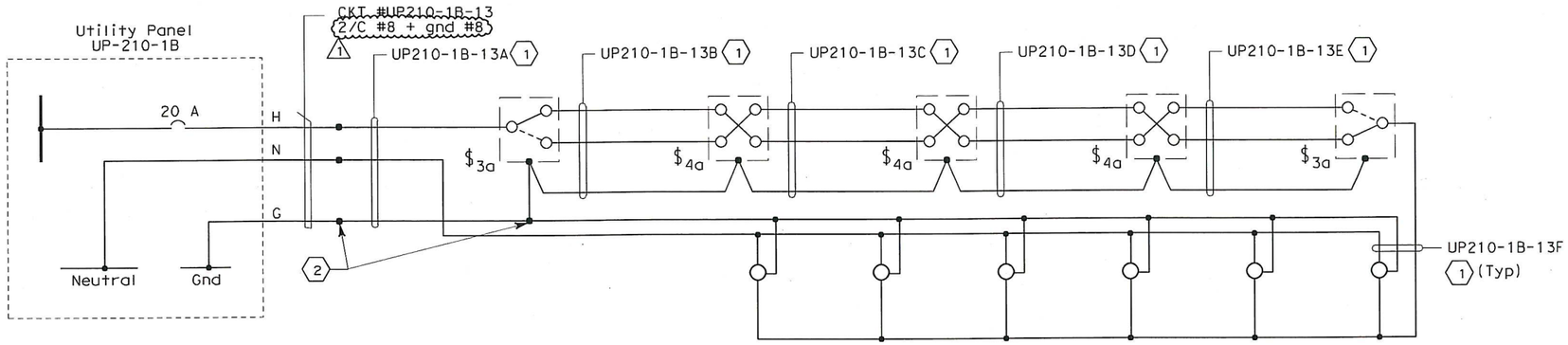

120V TOWER PLATFORM LIGHTING AT EL 89.85 m

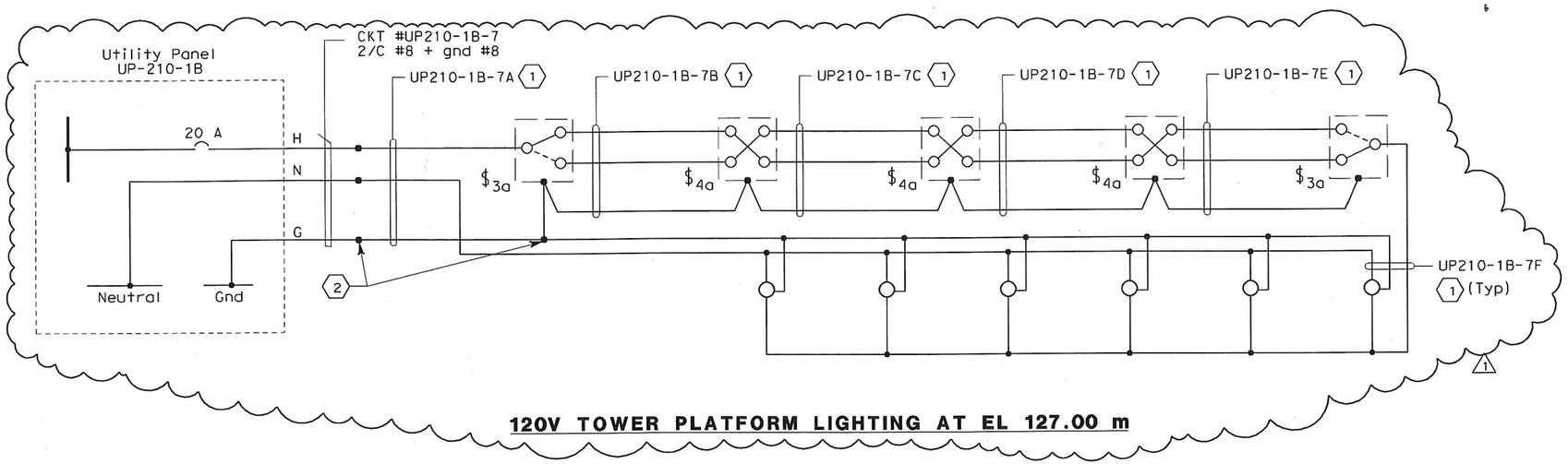

120V TOWER PLATFORM LIGHTING AT EL 127.00 m

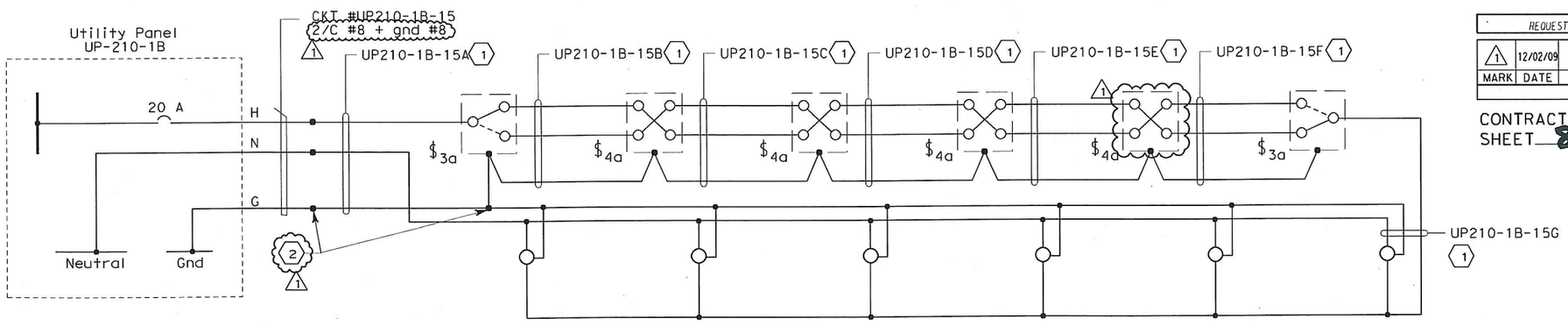

120V TOWER PLATFORM LIGHTING AT EL 139.85 m

SHEET NOTES:

1. #10 AWG single conductors.
2. Conductors spliced inside pull box PB-2R located on this elevation. 1
3. Deleted.

NOTES:

1. References:
   - For utility panel schedule, see sheet E-280.
   - For conduit and cable tray schedules, see sheets starting at E-401.
2. Refer to Tower Power and Lighting Plans E-285, E-285D and E-286 for light switch locations. 1

REQUEST FOR INFORMATION NOT ADDRESSED IN THIS CCO REMAIN IN FORCE

MARK	DATE	DESCRIPTIONS	BY	CH'D	CCO#
1	12/02/09	TOWER UTILITY PANELS	SYC	RG FW	70

REVISIONS

CONTRACT CHANGE ORDER NO. 70
SHEET 8 OF 45

REGISTERED PROFESSIONAL ENGINEER FADI WALIEDDINE No. 11465 Exp. 12/31/2009 ELECTRICAL STATE OF CALIFORNIA

FOR REVISION ONLY
1

DETAILS
TOWER AND SUSPENSION CABLE 120 V LIGHTING WIRING DIAGRAM
NO SCALE

E-254

REVISED BY	DATE REVISED

CALCULATED/DESIGNED BY	JP	DATE 09/01
CHECKED BY	BL	11/10

DESIGN OVERSIGHT
BEHZAD GOLEMOHAMMADI

STATE OF CALIFORNIA - DEPARTMENT OF TRANSPORTATION
Caltrans

LAST REVISION 00-00-00
DATE PLOTTED => 12/10/2009
TIME PLOTTED => 3:22:39 PM

FOR REDUCED PLANS ORIGINAL SCALE IS IN MILLIMETERS 0 20 40 60 80

DGN FILE =>t:\13103\ms\pse\SAS Struc\CCO\SAS CCO70\2009-12-02 issued for Submittal\04-0120f1_0264R01.dgn
USERNAME =>llorico

CU 04251 EA 0120F1

DIST	COUNTY	ROUTE	KILOMETER POST TOTAL PROJECT	SHEET No	TOTAL SHEETS
04	SF	80	13.2/13.9	270 R2	1204

REGISTERED ELECTRICAL ENGINEER 12/19/02 DATE

12-6-04
PLANS APPROVAL DATE

REGISTERED PROFESSIONAL ENGINEER JENS ERLINGSSON No 8249 Exp. 9/30/06 ELECTRICAL STATE OF CALIFORNIA

PB POWER, Inc.
A Parsons Brinckerhoff Company
303 Second St., Suite 700N
San Francisco, CA 94107-1317

The State of California or its officers or agents shall not be responsible for the accuracy or completeness of electronic copies of this plan sheet.

Caltrans now has a web site! To get to the web site, go to http://www.dot.ca.gov

Caltrans Metric

REQUEST FOR INFORMATION NOT ADDRESSED IN THIS CCO REMAIN IN FORCE

MARK	DATE	DESCRIPTIONS	BY	CH'D	CCO#
2	12/02/09	TOWER UTILITY PANELS	TW	RG FW	70
1	02/19/08	ELECTRICAL MODIFICATIONS	MP EL	RR	42

REVISIONS

CONTRACT CHANGE ORDER NO. 70
SHEET 9 OF 45

REGISTERED PROFESSIONAL ENGINEER FADI WALIEDDINE No 11465 Exp. 12/31/2009 ELECTRICAL STATE OF CALIFORNIA
FOR REVISION ONLY 2

REGISTERED PROFESSIONAL ENGINEER MARCELL FUMIO TAKAKI No E 8651 Exp. 9/30/2008 ELECTRICAL STATE OF CALIFORNIA
FOR REVISION ONLY 1

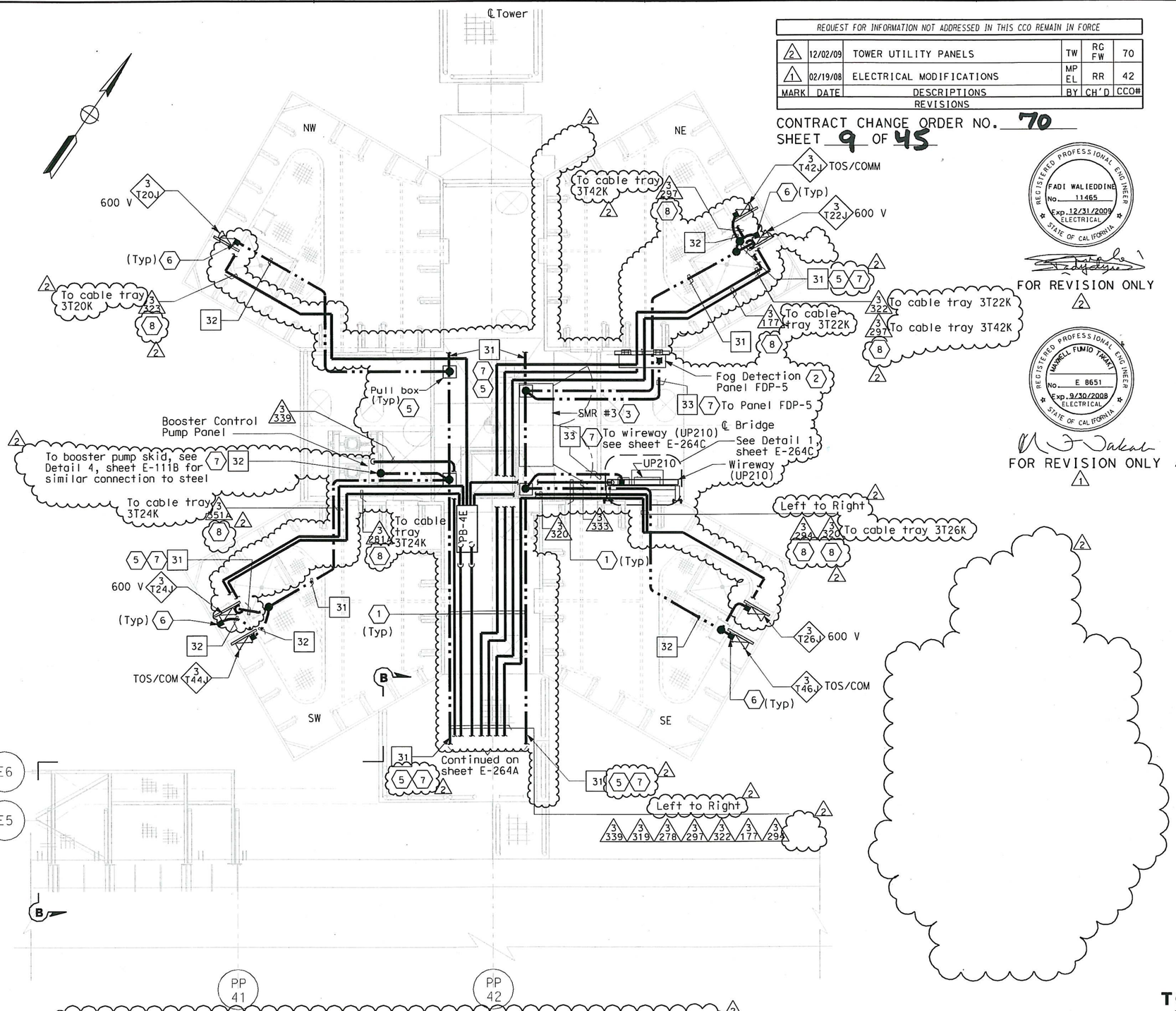

PLAN AT MAIN TOWER AT ELEV 53.85 m AND WALKWAY/ACCESS PLATFORM TO "E" LINE GIRDER

SCALE 1:40

TOS and Lighting conduits & equipment are not shown for clarity. See sheet E-264B for lighting layout. For TOS conduits, see E-281.

THIS PLAN ACCURATE FOR ELECTRICAL WORK ONLY.

ALL DIMENSIONS ARE IN MILLIMETERS UNLESS OTHERWISE SHOWN.

SHEET NOTES:

1. All conduits which thereafter cross the access walkways shall be raised to a level of at least 2438 above the grating to pass overhead, allowing free walkways on the remaining three quadrants of the platform. Door on north face of SE tower shaft shall remain accessible.
2. For FDP-5 location, conduit route and mounting details, see sheets E-293 and AS-13E.
3. For SMR #3 location, conduit route and mounting details, see sheets E-366 and E-264E.
4. Deleted.
5. For Pull Box and grounding installation and additional details, see Detail 8, sheet E-111A.
6. For cable tray bonding, see Details 4 & 5, sheet E-111B.
7. Ground conductor shall be protected from damage when exposed outside the structures. Route ground cable in liquidtight flexible metal conduit (LFMC) for protection.
8. Conduits are at El. 56.422 and connected to 600 V cable tray at this elevation inside respective tower shaft.

NOTES:

1. References:
   - For typical conduit installation details, see sheet E-268.
   - For utility panel UP-210 schedule, see sheet E-278.
   - For types of pull boxes, splice boxes and enclosures, see sheets E-83 and E-169.
   - For conduit and cable tray schedules, see sheets starting at E-401.
2. Electrical conduits shall enter the tower shafts between stiffeners A3 and A4 only for conduits going up or down inside the tower shafts between C1 and C2 only. For conduit entry details, see Structural Utility drawings.
3. All conduits and fittings routed exposed at grating shall be rigid galvanized steel, PVC coated.
4. For lighting installation and details, see sheet E-264B and E-264C
5. For other related work not shown on this sheet, see Electrical Special Provisions.
6. For Section B-B, see sheet E-264A
7. Typical conduit installation. See Detail 8, sheet E-268.

DETAILS
TOWER AND SUSPENSION CABLE TOWER POWER AND LIGHTING

SCALE AS NOTED

E-264

REVISED BY	DATE REVISED

CALCULATED/DESIGNED BY	FK	DATE 10/01
CHECKED BY	EDC	11/01

DESIGN OVERSIGHT
BEHZAD GOLEMOHAMMADI

STATE OF CALIFORNIA - DEPARTMENT OF TRANSPORTATION
Caltrans

LAST REVISION 00-00-00 | DATE PLOTTED => 12/10/2009 | TIME PLOTTED => 3:25:08 PM

FOR REDUCED PLANS ORIGINAL SCALE IS IN MILLIMETERS 0 20 40 60 80

DGN FILE =>t:\13103\ms\pse\SAS Struc\CCO\SAS CCO70\2009-12-02 issued for Submittal\04-0120f1_0270R02.dgn
USERNAME =>llorico

CU 04251 | EA 0120F1

DIST	COUNTY	ROUTE	KILOMETER POST TOTAL PROJECT	SHEET No	TOTAL SHEETS
04	SF	80	13.2/13.9	271 R4	1204

REGISTERED ELECTRICAL ENGINEER 12/19/02 DATE

12-6-04
PLANS APPROVAL DATE

REGISTERED PROFESSIONAL ENGINEER JENS ERLINGSSON No. 8249 Exp. 9/30/06 ELECTRICAL STATE OF CALIFORNIA

PB POWER, Inc.
A Parsons Brinckerhoff Company
303 Second St., Suite 700N
San Francisco, CA 94107-1317

The State of California or its officers or agents shall not be responsible for the accuracy or completeness of electronic copies of this plan sheet.

Caltrans now has a web site! To get to the web site, go to http://www.dot.ca.gov

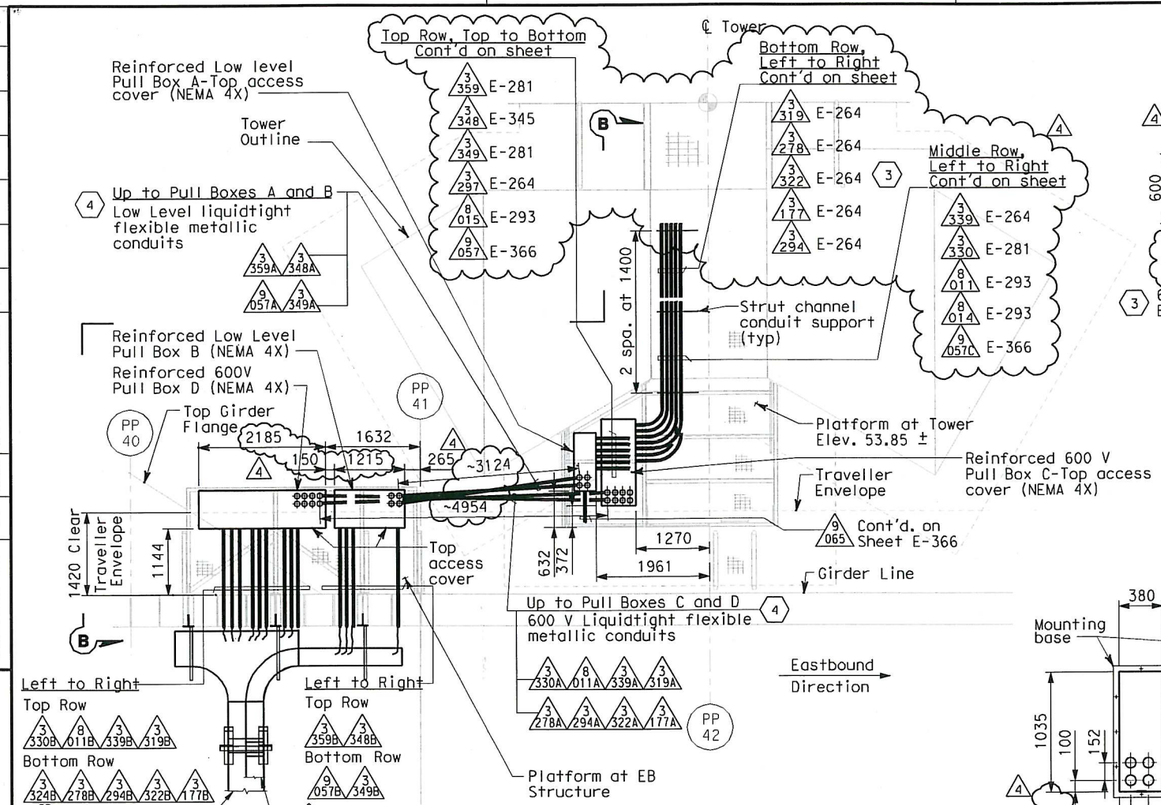

PLAN-PLATFORM AT ELEV 53.85 m

SCALE 1:50

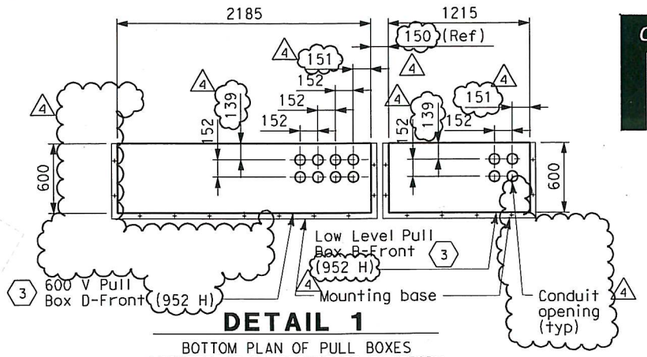

DETAIL 1

BOTTOM PLAN OF PULL BOXES LOCATED AT EB STRUCTURE PLATFORM
SCALE 1:25

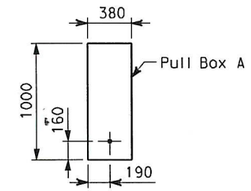

SECTION A-A

SCALE 1:25

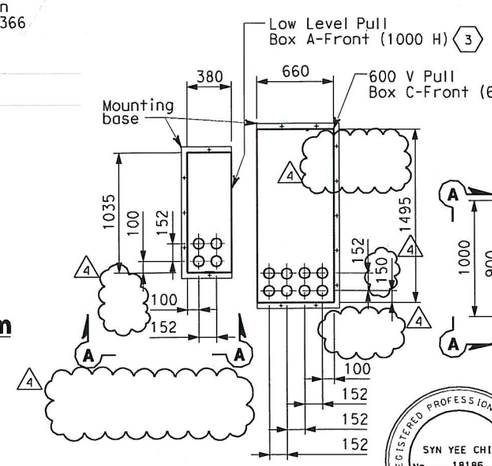

DETAIL 2

BOTTOM PLAN OF PULL BOXES LOCATED AT TOWER PLATFORM
SCALE 1:25

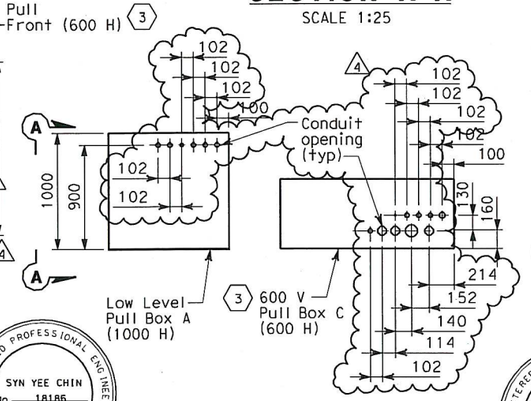

DETAIL 3

FRONT ELEVATION OF PULL BOXES LOCATED AT TOWER PLATFORM
SCALE 1:25

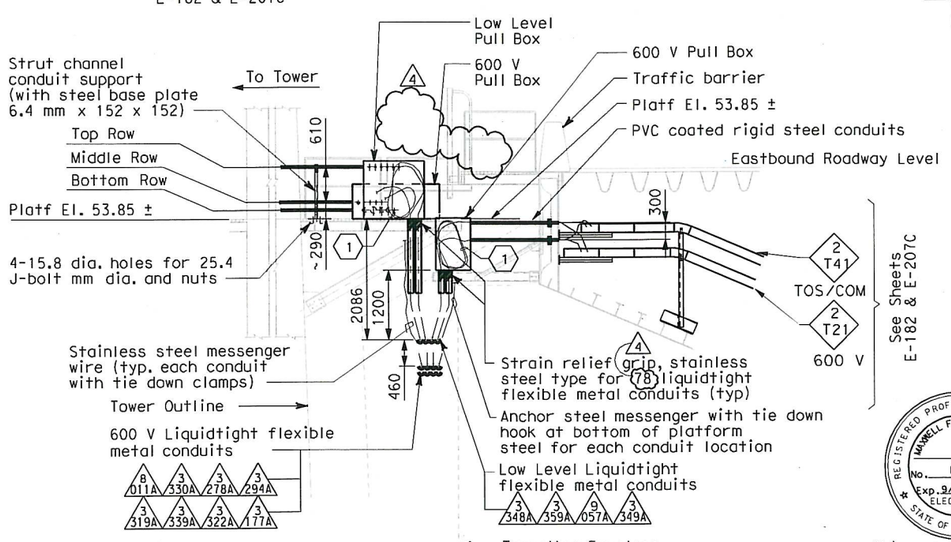

SECTION B

SCALE 1:50

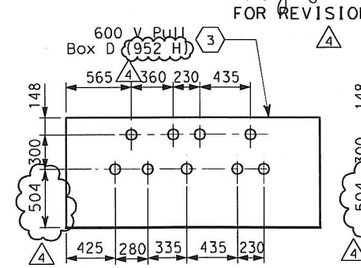

DETAIL 4

FRONT ELEVATION OF PULL BOXES LOCATED AT EB STRUCTURE PLATFORM
SCALE 1:25

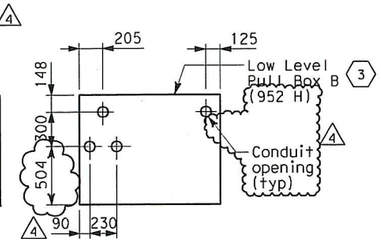

SHEET NOTES

1. Coil 3 meters long of cable for each circuits inside the pull boxes.
2. Deleted.
4
3. For additional fabrication details of pull boxes, see sheets E-264G and E-264H.
4. Electrical conduit design between Eastbound Structure and Main Tower is based on the maximum expansion of 1000 mm all directions. For conduit support, see E-78H. 4

NOTES

1. For location of sleeves Eastbound Structure PP-40 and PP-41, see Structural Plans.
2. Each liquidtight flexible metallic conduit shall be provided with #6 green insulated ground conductor (inside) the conduit. 4
3. Contractor shall verify all the conduit opening prior to start of work.

REGISTERED PROFESSIONAL ENGINEER SYN YEE CHIN No. 18186 Exp. 09/30/2011 ELECTRICAL STATE OF CALIFORNIA

FOR REVISION ONLY 4

REGISTERED PROFESSIONAL ENGINEER S. A. ESTOQUE, JR No. E-10151 Exp. 12/31/2008 ELECTRICAL STATE OF CALIFORNIA

FOR REVISION ONLY 2

REGISTERED PROFESSIONAL ENGINEER FADI WALIEDDINE No. 11465 Exp. 12/31/2009 ELECTRICAL STATE OF CALIFORNIA

FOR REVISION ONLY 3

REGISTERED PROFESSIONAL ENGINEER MAXWELL FUMIO TAKAKI No. E 8651 Exp. 9/30/2008 ELECTRICAL STATE OF CALIFORNIA

FOR REVISION ONLY 1

REQUEST FOR INFORMATION NOT ADDRESSED IN THIS CCO REMAIN IN FORCE

MARK	DATE	DESCRIPTIONS	BY	CH'D	CCO#
4	02/24/10	TOWER UTILITY PANELS	TW RB	RG SYC	70
3	10/03/08	STRONG MOTION SYSTEM	TW	RG FW	74
2	02/25/08	CABLE TRAY CHANGES	MP	RG SE	42S1
1	02/19/08	ELECTRICAL MODIFICATIONS	MP EL	RR	42

REVISIONS

CONTRACT CHANGE ORDER NO. 70
SHEET 10 OF 45

DETAILS
TOWER AND SUSPENSION CABLE

SCALE: AS NOTED

E-264A

ALL DIMENSIONS ARE IN MILLIMETERS UNLESS OTHERWISE SHOWN.

THIS PLAN ACCURATE FOR ELECTRICAL WORK ONLY.

STATE OF CALIFORNIA - DEPARTMENT OF TRANSPORTATION
Caltrans

DESIGN OVERSIGHT
BEHZAD GOLEMOHAMMADI

CALCULATED/ DESIGNED BY	EJL	DATE 3/04	REVISED BY	DATE REVISED
CHECKED BY	JE	3/04		

LAST REVISION 00-00-00
DATE PLOTTED => 2/26/2010
TIME PLOTTED => 9:45:11 AM

FOR REDUCED PLANS ORIGINAL SCALE IS IN MILLIMETERS 0 20 40 60 80

DGN FILE =>t:\13103\ms\pse\SAS Struc\CCO\SAS CCO70\2009-12-02 Issued for Submittal\04-0120f1_0271R04.dgn
USERNAME =>llorico

CU 04251 | EA 0120F1

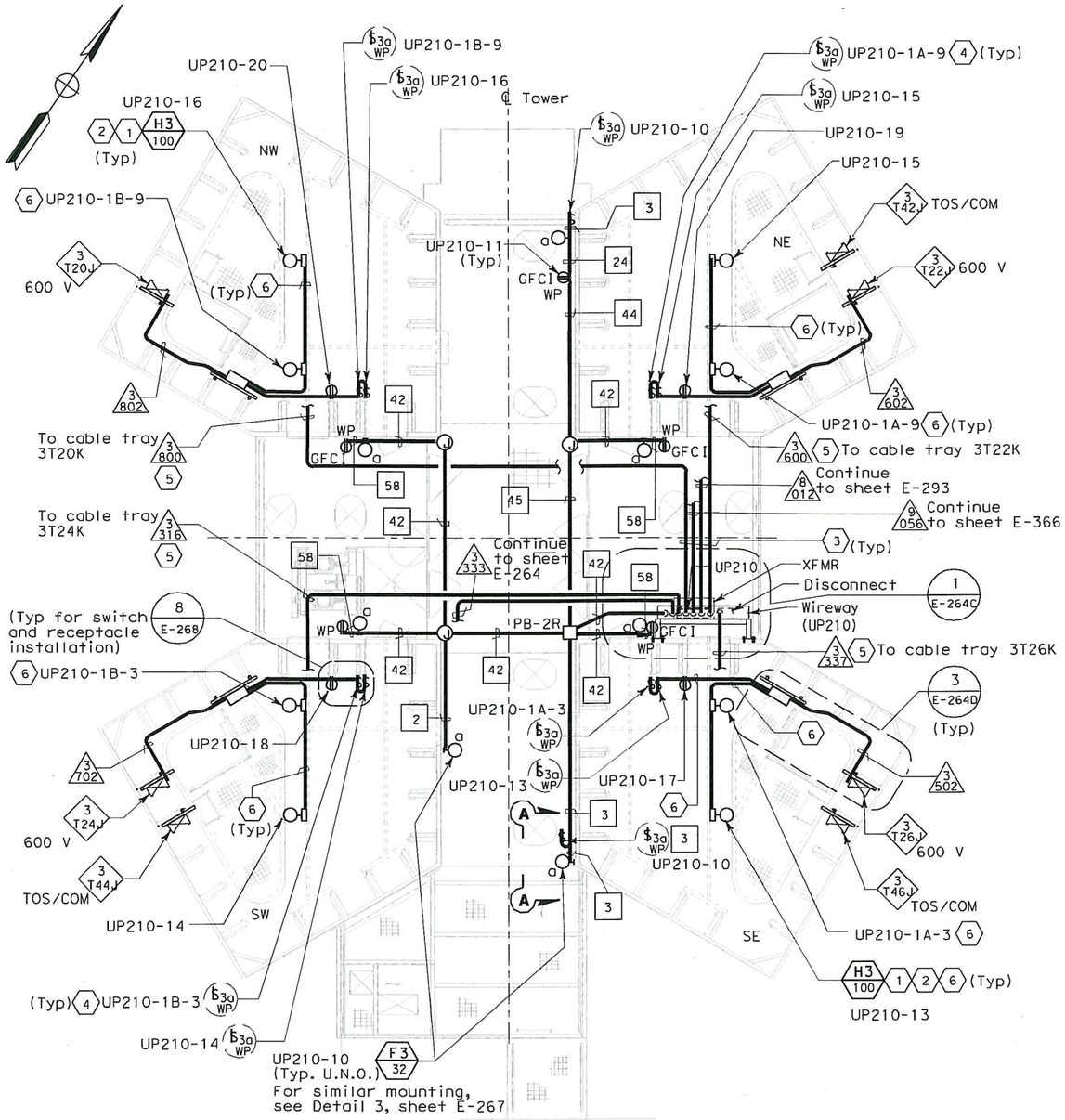

PLAN AT MAIN TOWER AT ELEV 53.85 m

SCALE 1:40

Some conduit & equipment are not shown for clarity. See sheet E-264 for layout of equipment. Circuits shown are for SE tower shaft. Circuit for other shafts shown on E-274, E-275 and E-275A.

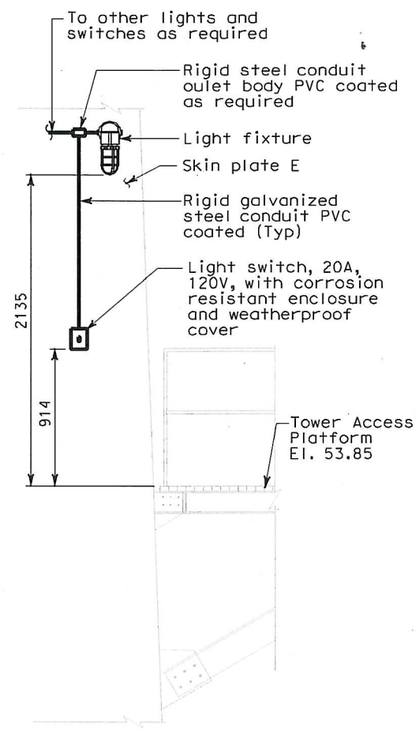

SECTION A-A

NO SCALE

SHEET NOTES:

1. Light shown mounted under ceiling diaphragm.
2. Typical light mounting details shown on sheet E-283.
3. All conduits which thereafter cross the access walkways shall be raised to a level of at least 2438 above the grating to pass overhead, allowing free walkways on the remaining three quadrants of the platform. Door on north face of SE tower shaft shall remain accessible.
4. Multiple switches at certain elevations. See sheets E-284, E-284A and E-284B for details.
5. Conduits are at El. 56.422 and connected to 600 V cable tray at this elevation inside respective tower shaft.
6. Number and sizes of conduit are field route to lights, receptacles and switches. See E-284 and E-284A for conduit sizes and pull box type per location.

NOTES:

1. References:
   - For typical conduit installation details, see sheet E-268.
   - For utility panel UP-210 schedule, see sheet E-278.
   - For types of pull boxes, splice boxes and enclosures, see sheets E-83 and E-169.
   - For conduit and cable tray schedules, see sheets starting at E-401.
   - For lighting fixture schedule, see sheet E-273.
   - For lighting installation details, see sheet E-267.
2. Electrical conduits shall enter the tower shafts between stiffeners A3 and A4 only for conduits going up or down inside the tower shafts between C1 and C2 only For conduit entry details, see Structural Utility drawings.
3. All conduits and fittings routed exposed at grating shall be rigid galvanized steel, PVC coated.
4. Fixture mounting height elevation shall be 2.125 m above floor/platform elevation UNO.
5. For other related work not shown on this sheet, see Electrical Special Provisions.
6. For Section A-A, see sheet E-285.
7. Typical conduit installation. See Detail 8, sheet E-268.

DIST	COUNTY	ROUTE	KILOMETER POST TOTAL PROJECT	SHEET No.	TOTAL SHEETS
04	SF	80	13.2/13.9	271 S1	1204

REGISTERED ELECTRICAL ENGINEER 9/11/08 DATE

PLANS APPROVAL DATE

REGISTERED PROFESSIONAL ENGINEER FADI WALIEDDINE No. 11465 Exp. 12/31/2009 ELECTRICAL STATE OF CALIFORNIA

PB AMERICAS, Inc.
A Parsons Brinckerhoff Company
303 Second St., Suite 700N
San Francisco, CA 94107-1317

The State of California or its officers or agents shall not be responsible for the accuracy or completeness of electronic copies of this plan sheet.

Caltrans now has a web site! To get to the web site, go to http://www.dot.ca.gov

Caltrans Metric

MARK	DATE	DESCRIPTIONS	BY	CH'D	CCO#
0	12/11/09	TOWER UTILITY PANELS	JS TW	RG FW	70

REQUEST FOR INFORMATION NOT ADDRESSED IN THIS CCO REMAIN IN FORCE

REVISIONS

CONTRACT CHANGE ORDER NO. 70
SHEET 11 OF 43

ALL DIMENSIONS ARE IN MILLIMETERS UNLESS OTHERWISE SHOWN.

DETAILS
TOWER AND SUSPENSION CABLE
TOWER POWER AND LIGHTING

SCALE AS NOTED

E-264B

DATE	REVISED BY	DATE	REVISED BY
10/01	FK	11/01	EDC

CALCULATED/DESIGNED BY
CHECKED BY

DESIGN OVERSIGHT
BEHZAD GOLEMOHAMMADI

STATE OF CALIFORNIA - DEPARTMENT OF TRANSPORTATION
Caltrans

THIS PLAN ACCURATE FOR ELECTRICAL WORK ONLY.

FOR REDUCED PLANS ORIGINAL SCALE IS IN MILLIMETERS 0 20 40 60 80

DGN FILE =>t:\13103\ms\pse\SAS Struc\CCO\SAS CCO70\2009-12-02 issued for Submittal\04-0120f1_0271S01.dgn
USERNAME =>liorico

CU 04251 EA 0120F1

LAST REVISION 00-00-00
DATE PLOTTED => 12/10/2009
TIME PLOTTED => 3:25:41 PM

DIST	COUNTY	ROUTE	KILOMETER POST TOTAL PROJECT	SHEET No.	TOTAL SHEETS
04	SF	80	13.2/13.9	271 S2	1204

Syn Yee Chin 2/24/10
REGISTERED ELECTRICAL ENGINEER DATE

PLANS APPROVAL DATE

REGISTERED PROFESSIONAL ENGINEER SYN YEE CHIN No. 18186 Exp. 09/30/2011 ELECTRICAL STATE OF CALIFORNIA

PB AMERICAS, Inc.
A Parsons Brinckerhoff Company
303 Second St., Suite 700N
San Francisco, CA 94107-1317

The State of California or its officers or agents shall not be responsible for the accuracy or completeness of electronic copies of this plan sheet.

Caltrans now has a web site! To get to the web site, go to http://www.dot.ca.gov

Caltrans Metric

NOTES:

1. References:
   - For utility panel UP-210 schedule, see sheet E-278.
   - For conduit and cable tray schedules, see sheets starting at E-401.
   - For lighting fixture schedule, see sheet E-273.
   - For vertical conduit runs support system, see sheet E-287.
   - For lighting installation details, see sheet E-267.
2. All conduits and fittings routed exposed at grating shall be rigid galvanized steel, PVC coated, UNO.
3. Fixture mounting height elevation shall be 2.125 m above floor/platform elevation UNO.

SHEET NOTES:

(1) Bolt lengths to be long enough to fully engage all materials through which they pass, including all washers and nuts, and where attaching to structural steel be anchored in threads to a depth at least 1.2 times the bolt diameter. Holes in structural members shall be drilled and bottom tapped to 5 mm minimum deeper than the depth to which the bolt will engage the steel.

(2) 203 x 203 x 1220, 304SS, Nema 4X wireway. with bracket hanger for mounting.

(3) For continuation, see sheets E-293, and E-366.

(4) Install #2 bare copper wire (bonding jumper) inside conduit and connect to conduit insulated grounding bushing and to enclosure grounding terminal. Use servit post Burndy Type KC or equal inside bottom of the enclosure when no factory grounding terminal is provided. See Detail 8, sheet E-111B for similar installation.

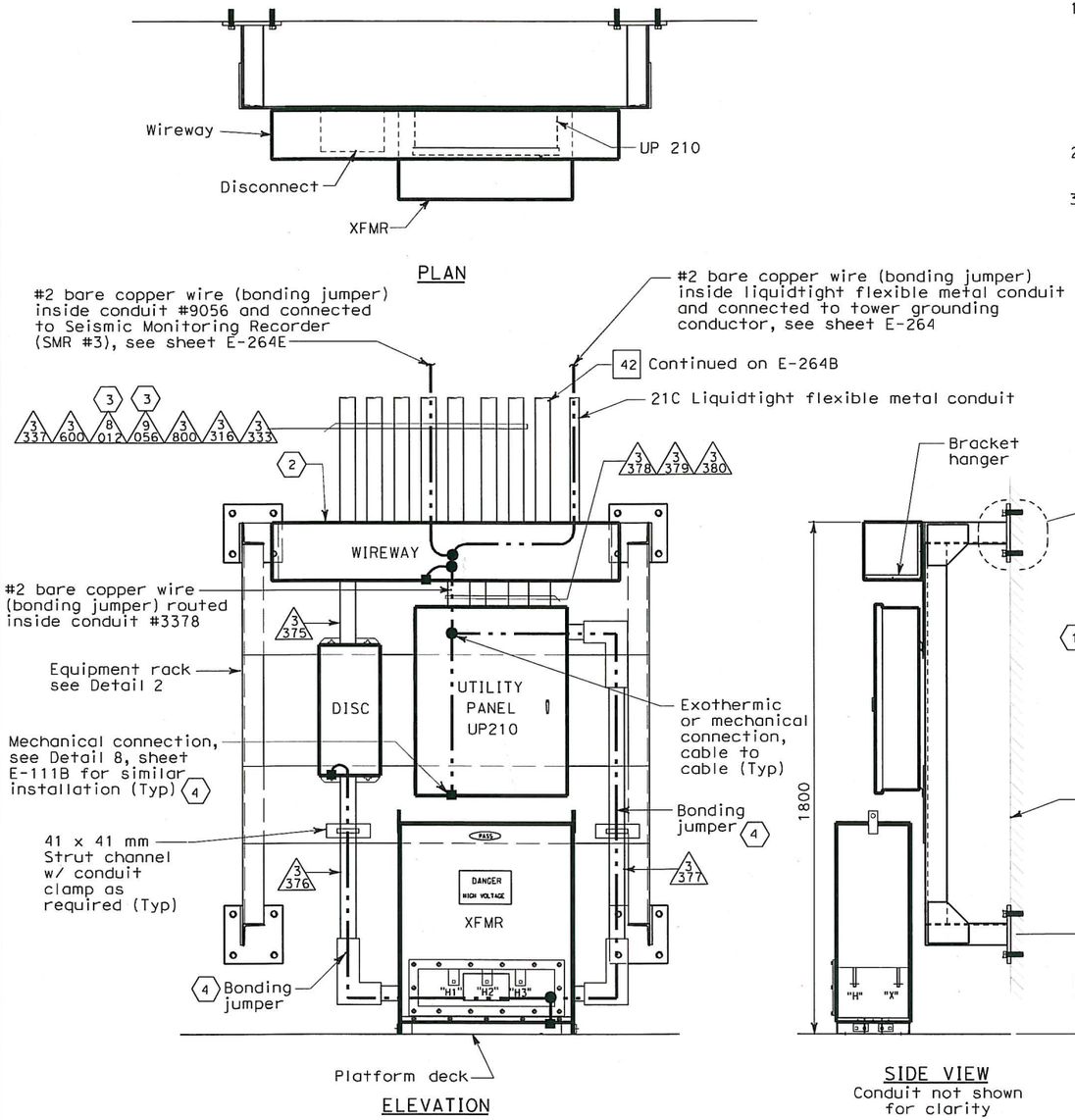

DETAIL 1
SCALE 1:10

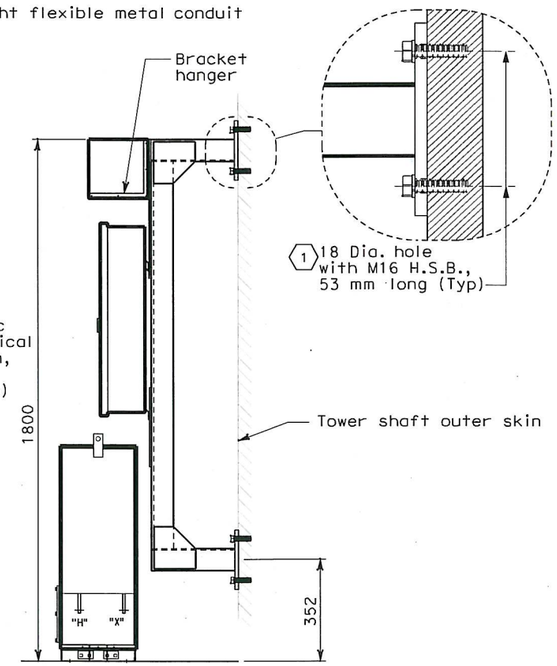

SIDE VIEW
Conduit not shown for clarity

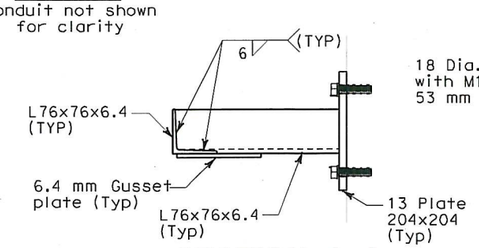

SECTION A-A
SCALE 1:5

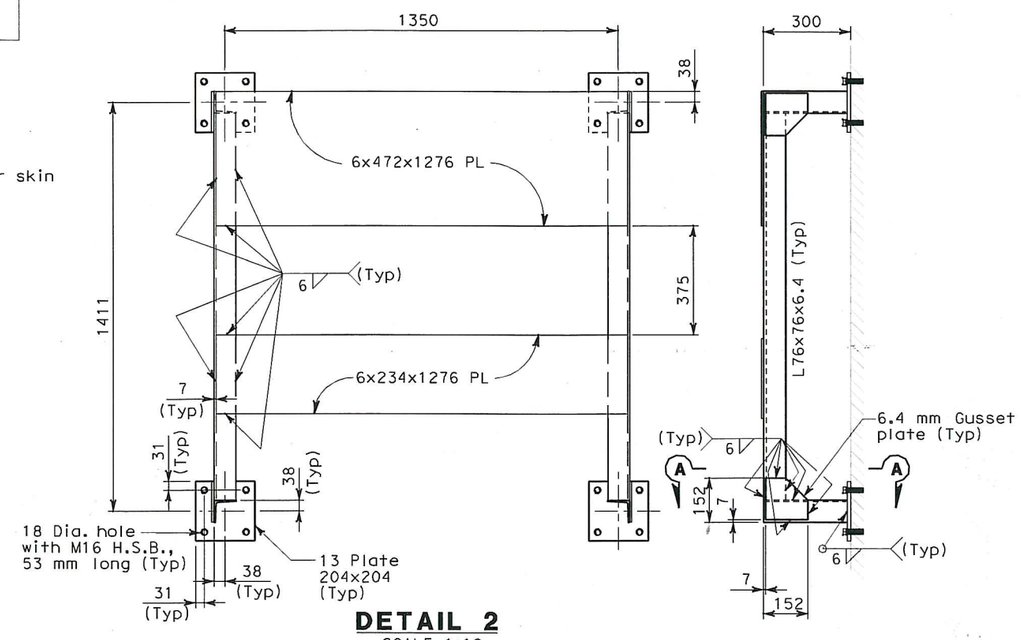

DETAIL 2
SCALE 1:10

DETAILS
TOWER AND SUSPENSION CABLE
TOWER POWER AND LIGHTING
SCALE: AS NOTED

E-264C

REQUEST FOR INFORMATION NOT ADDRESSED IN THIS CCO REMAIN IN FORCE					
0	02/24/10	TOWER UTILITY PANELS	JS TW	RG SYC	70
MARK	DATE	DESCRIPTIONS	BY	CH'D	CCO#
REVISIONS					

CONTRACT CHANGE ORDER NO. 70
SHEET 12 OF 45

THIS PLAN ACCURATE FOR ELECTRICAL WORK ONLY.

ALL DIMENSIONS ARE IN MILLIMETERS UNLESS OTHERWISE SHOWN.

FOR REDUCED PLANS ORIGINAL SCALE IS IN MILLIMETERS 0 20 40 60 80

DGN FILE =>t:\13103\ms\pse\SAS Struc\CCO\SAS CC070\2009-12-02 Issued for Submittal\04-0120f1_0271S02.dgn
USERNAME =>llorico

CU 04251 | EA 0120F1

DESIGN OVERSIGHT: BEHZAD GOLEMOHAMMADI

STATE OF CALIFORNIA - DEPARTMENT OF TRANSPORTATION

Caltrans

CALCULATED/DESIGNED BY	CHECKED BY	REVISED BY	DATE REVISED
FK	EDC		
DATE 10/01	11/01		

LAST REVISION 00-00-00
DATE PLOTTED => 2/26/2010
TIME PLOTTED => 9:50:12 AM

DIST	COUNTY	ROUTE	KILOMETER POST TOTAL PROJECT	SHEET No	TOTAL SHEETS
04	SF	80	13.2/13.9	271 S3	1204

REGISTERED ELECTRICAL ENGINEER DATE

PLANS APPROVAL DATE

REGISTERED PROFESSIONAL ENGINEER FADI WALIEDDINE No. 11465 Exp. 12/31/2009 ELECTRICAL STATE OF CALIFORNIA

PB AMERICAS, Inc.
A Parsons Brinckerhoff Company
303 Second St., Suite 700N
San Francisco, CA 94107-1317

The State of California or its officers or agents shall not be responsible for the accuracy or completeness of electronic copies of this plan sheet.

Caltrans now has a web site! To get to the web site, go to http://www.dot.ca.gov

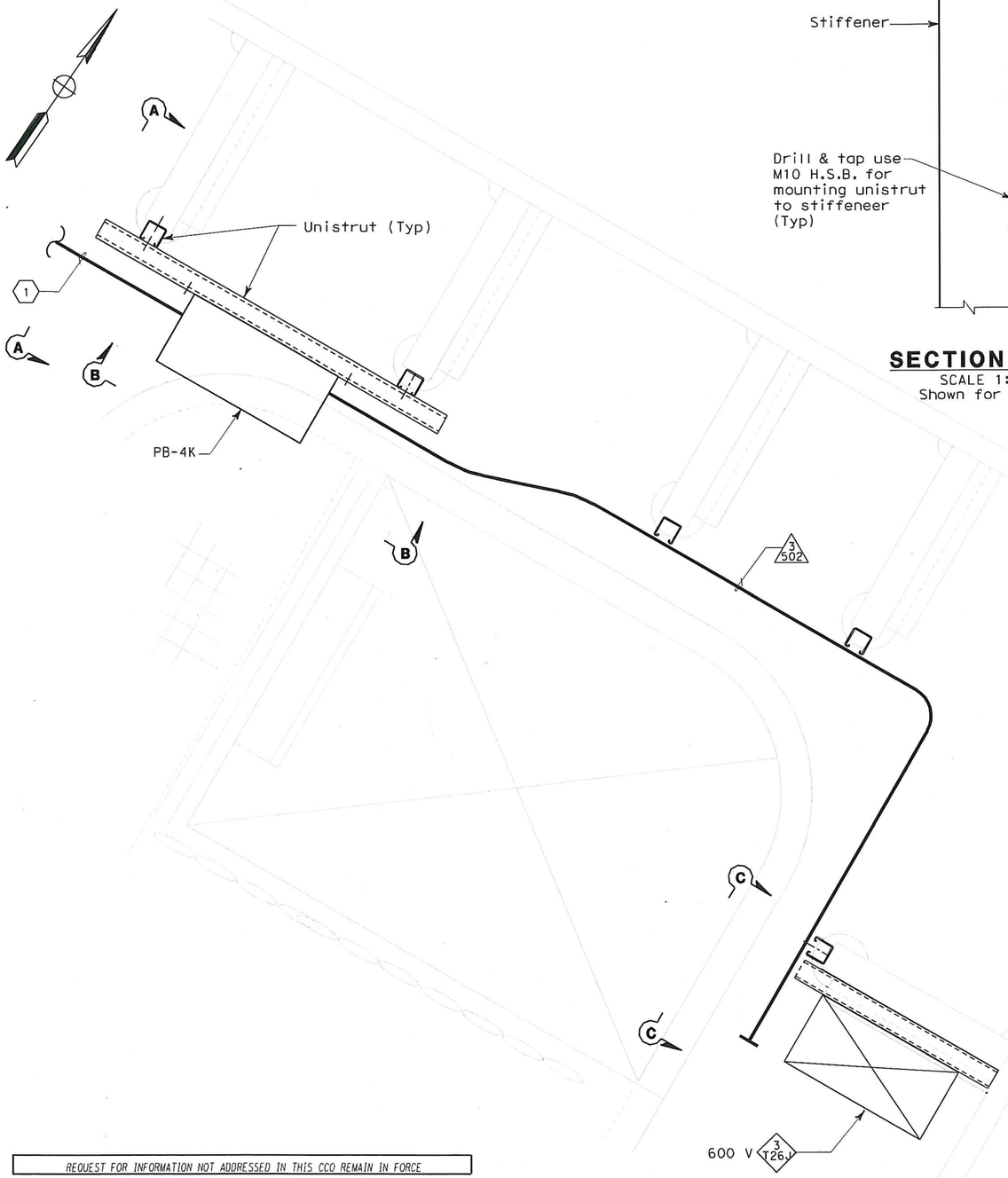

DETAIL 3

SCALE 1:5

Plan at Elevation 53.85 m shown for PB-4K
Some conduits not shown for clarity

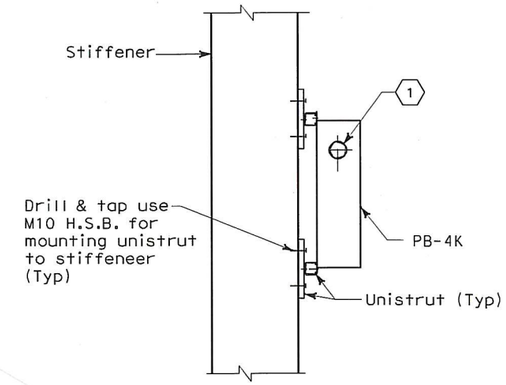

SECTION A-A

SCALE 1:10
Shown for PB-4K

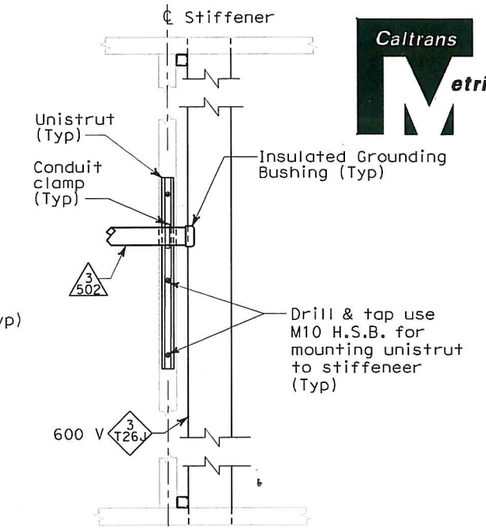

SECTION C-C

SCALE 1:10

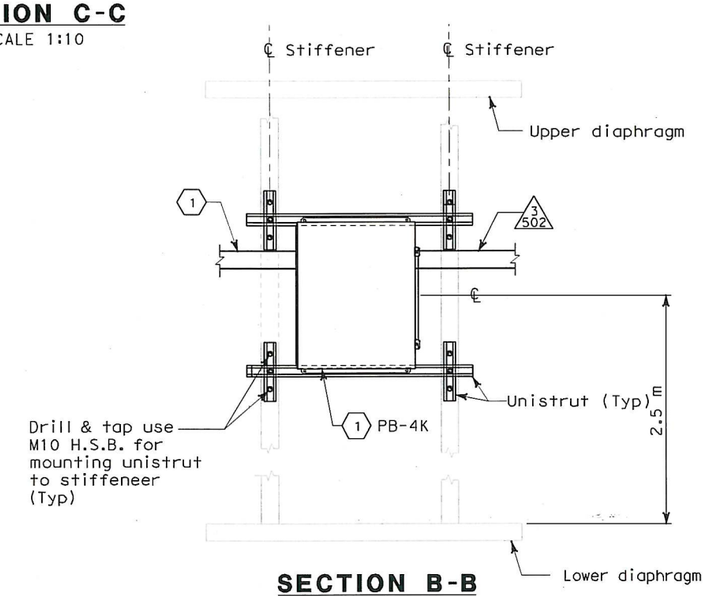

SECTION B-B

SCALE 1:10
Shown for PB-4K

Light and receptacle distribution box detail typical stiffener location shown for SE. NW similar and SW and NE are opposite hand.

SHEET NOTES:

(1) Numbers and sizes of conduits are field route to lights, receptacles and switches. See sheets E-284 and E-284A for conduit information.

MARK	DATE	DESCRIPTIONS	BY	CH'D	CCO#
		REQUEST FOR INFORMATION NOT ADDRESSED IN THIS CCO REMAIN IN FORCE			
0	12/11/09	TOWER UTILITY PANELS	JS TW	RG FW	70

REVISIONS

CONTRACT CHANGE ORDER NO. 70
SHEET 13 OF 45

THIS PLAN ACCURATE FOR ELECTRICAL WORK ONLY.

ALL DIMENSIONS ARE IN MILLIMETERS UNLESS OTHERWISE SHOWN.

FOR REDUCED PLANS ORIGINAL SCALE IS IN MILLIMETERS 0 20 40 60 80

DETAILS
TOWER AND SUSPENSION CABLE TOWER POWER AND LIGHTING

SCALE AS NOTED

E-264D

CALCULATED/ DESIGNED BY	FK	DATE 10/01	REVISED BY
CHECKED BY	EDC	11/01	DATE REVISED

DESIGN OVERSIGHT
BEHZAD GOLEMOHAMMADI

STATE OF CALIFORNIA - DEPARTMENT OF TRANSPORTATION
Caltrans

LAST REVISION 00-00-00
DATE PLOTTED => 12/10/2009
TIME PLOTTED => 3:26:36 PM

DIST	COUNTY	ROUTE	KILOMETER POST TOTAL PROJECT	SHEET No	TOTAL SHEETS
04	SF	80	13.2/13.9	271 S4	1204

REGISTERED ELECTRICAL ENGINEER DATE

PLANS APPROVAL DATE

REGISTERED PROFESSIONAL ENGINEER FADI WALIEDDINE No. 11465 Exp. 12/31/2009 ELECTRICAL STATE OF CALIFORNIA

PB AMERICAS, Inc.
A Parsons Brinckerhoff Company
303 Second St., Suite 700N
San Francisco, CA 94107-1317

The State of California or its officers or agents shall not be responsible for the accuracy or completeness of electronic copies of this plan sheet.

Caltrans now has a web site! To get to the web site, go to http://www.dot.ca.gov

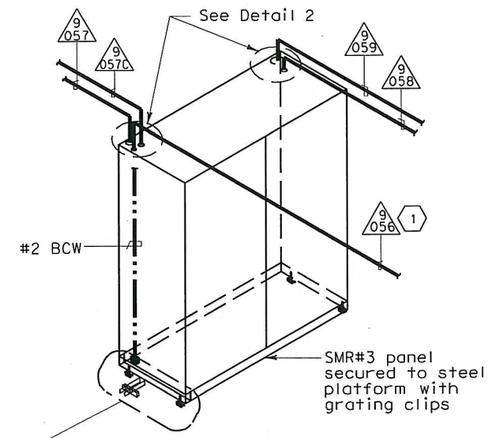

ELEVATION - DETAIL 1

STRONG MOTION RECORDER #3

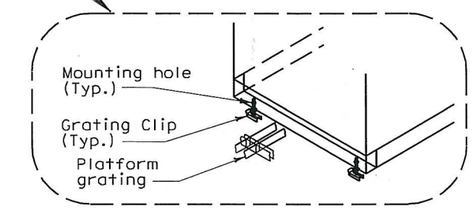

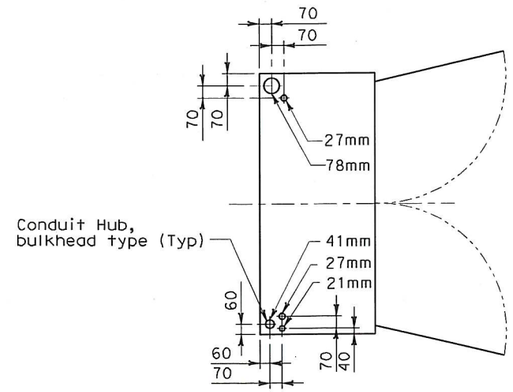

PLAN - DETAIL 2

STRONG MOTION RECORDER #3

SHEET NOTES:

(1) Install #2 Bare copper wire (bonding jumper) in conduit 9/056 from UP210 to SMR #3. For additional grounding detail, see sheet E-264C.

NOTES:

1. References:
   - For detail plan drawing, see sheet E-366.
2. All conduits and fittings routed at grating shall be PVC coated, rigid galvanized steel.

REQUEST FOR INFORMATION NOT ADDRESSED IN THIS CCO REMAIN IN FORCE

MARK	DATE	DESCRIPTIONS	BY	CH'D	CCO#
0	12/02/09	TOWER UTILITY PANELS	TW	RG FW	70

REVISIONS

CONTRACT CHANGE ORDER NO. 70
SHEET 14 OF 45

DETAILS
TOWER AND SUSPENSION CABLE
TOWER POWER AND LIGHTING

NO SCALE

E-264E

DATE	REVISED BY	DATE REVISED

CALCULATED/DESIGNED BY
CHECKED BY

DESIGN OVERSIGHT
BEHZAD GOLEMOHAMMADI

STATE OF CALIFORNIA - DEPARTMENT OF TRANSPORTATION
Caltrans

THIS PLAN ACCURATE FOR ELECTRICAL WORK ONLY.

ALL DIMENSIONS ARE IN MILLIMETERS UNLESS OTHERWISE SHOWN.

FOR REDUCED PLANS ORIGINAL SCALE IS IN MILLIMETERS 0 20 40 60 80

DGN FILE =>t:\13103\ms\pse\SAS Struc\CCO\SAS CCO70\2009-12-02 issued for Submittal\04-0120f1_0271S04.dgn
USERNAME =>llorico

CU 04251 | EA 0120F1

LAST REVISION 00-00-00
DATE PLOTTED => 12/10/2009
TIME PLOTTED => 3:27:52 PM

DIST	COUNTY	ROUTE	KILOMETER POST TOTAL PROJECT	SHEET No	TOTAL SHEETS
04	SF	80	13.2/13.9	271 S6	1204

REGISTERED ELECTRICAL ENGINEER DATE

PLANS APPROVAL DATE

REGISTERED PROFESSIONAL ENGINEER FADI WALIEDDINE No. 11465 Exp. 12/31/2009 ELECTRICAL STATE OF CALIFORNIA

PB AMERICAS, Inc.
A Parsons Brinckerhoff Company
303 Second St., Suite 700N
San Francisco, CA 94107-1317

The State of California or its officers or agents shall not be responsible for the accuracy or completeness of electronic copies of this plan sheet.

Caltrans now has a web site! To get to the web site, go to http://www.dot.ca.gov

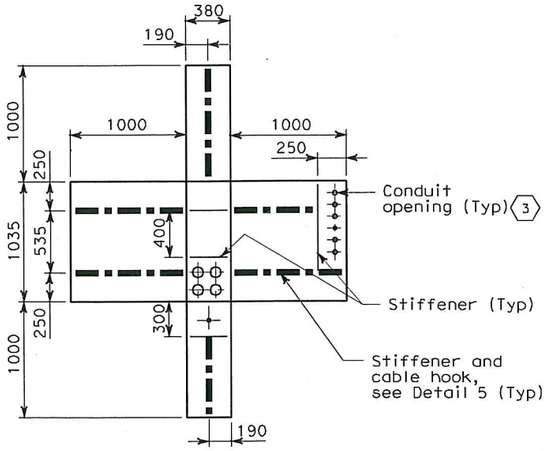

DETAIL 1
PULL BOX A - EXPLODED PLAN VIEW FROM THE INSIDE (1)

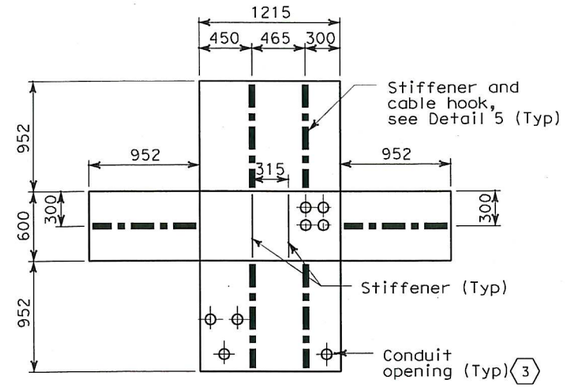

DETAIL 2
PULL BOX B - EXPLODED PLAN VIEW FROM THE INSIDE (1)

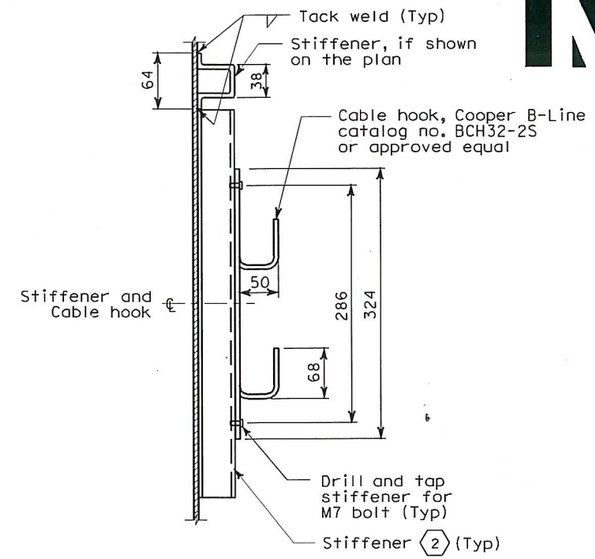

DETAIL 5
STIFFENER AND CABLE HOOK ELEVATION VIEW

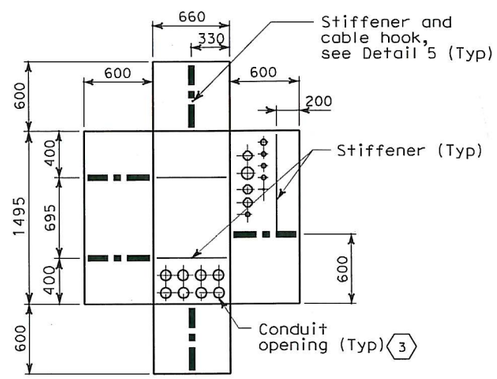

DETAIL 3
PULL BOX C - EXPLODED PLAN VIEW FROM THE INSIDE (1)

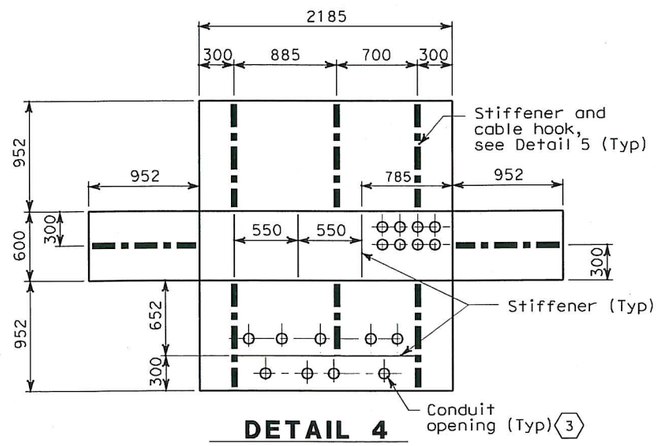

DETAIL 4
PULL BOX D - EXPLODED PLAN VIEW FROM THE INSIDE (1)

SHEET NOTES

(1) Furnish and install stiffeners and cable hooks around the inside walls of pull box. Provide minimal distance between pull box edge and stiffener.

(2) The specified location and quantity of stiffeners represents only the recommended location for attaching the cable hooks. Stiffeners with cable hooks shall be able to withstand a minimum total weight of 60 kg. Additional stiffeners may be installed per the fabricator's discretion to maintain the integrity of the box based on the form and shape.

(3) For actual location of conduit openings, see sheet E-264A.

NOTES:

1. References:
   - For plan and additional notes, see sheet E-264A.
   - For pull box plan and elevation view, see sheet E-264H.

REQUEST FOR INFORMATION NOT ADDRESSED IN THIS CCO REMAIN IN FORCE

MARK	DATE	DESCRIPTIONS	BY	CH'D	CCO#
0	09/18/09	TOWER UTILITY PANELS	RSB	RG FW	70

REVISIONS

CONTRACT CHANGE ORDER NO. 70
SHEET 15 OF 45

DETAILS
TOWER AND SUSPENSION CABLE
TOWER POWER AND LIGHTING
NO SCALE

E-264G

THIS PLAN ACCURATE FOR ELECTRICAL WORK ONLY.

ALL DIMENSIONS ARE IN MILLIMETERS UNLESS OTHERWISE SHOWN.

FOR REDUCED PLANS ORIGINAL SCALE IS IN MILLIMETERS 0 20 40 60 80

DGN FILE =>t:\13103\ms\pse\SAS Struc\CCO\SAS CCO70\2009-12-02 issued for Submittal\04-0120f1_0271S06.dgn
USERNAME =>llorico

CU 04251 | EA 0120F1

DATE PLOTTED => 12/10/2009
TIME PLOTTED => 3:28:33 PM

LAST REVISION 00-00-00

STATE OF CALIFORNIA - DEPARTMENT OF TRANSPORTATION
Caltrans

DESIGN OVERSIGHT: BEHZAD GOLEMOHAMMADI

CALCULATED/DESIGNED BY | CHECKED BY | DATE | REVISED BY | DATE REVISED

DIST	COUNTY	ROUTE	KILOMETER POST TOTAL PROJECT	SHEET No	TOTAL SHEETS
04	SF	80	13.2/13.9	271 S7	1204

REGISTERED ELECTRICAL ENGINEER 9-18-09 DATE

PLANS APPROVAL DATE

REGISTERED PROFESSIONAL ENGINEER FADI WALIEDDINE No. 11465 Exp. 12/31/2009 ELECTRICAL STATE OF CALIFORNIA

PB AMERICAS, Inc.
A Parsons Brinckerhoff Company
303 Second St., Suite 700N
San Francisco, CA 94107-1317

The State of California or its officers or agents shall not be responsible for the accuracy or completeness of electronic copies of this plan sheet.

Caltrans now has a web site! To get to the web site, go to http://www.dot.ca.gov

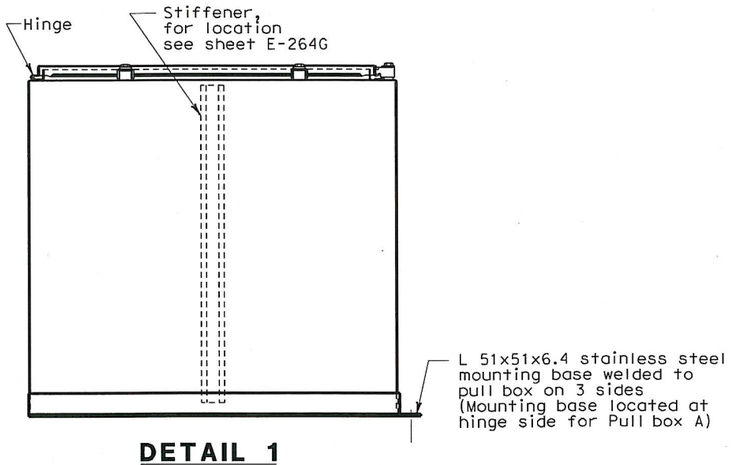

DETAIL 1
TYPICAL PULL BOX - SIDE ELEVATION VIEW (1)(2)
TYPICAL FOR PULL BOX A , B AND D

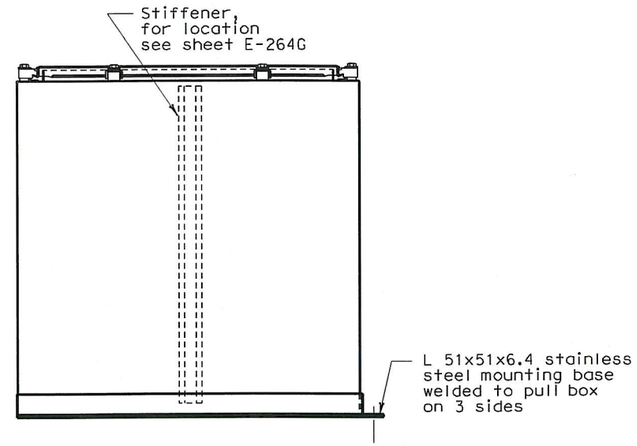

DETAIL 2
PULL BOX C - SIDE ELEVATION VIEW (2)

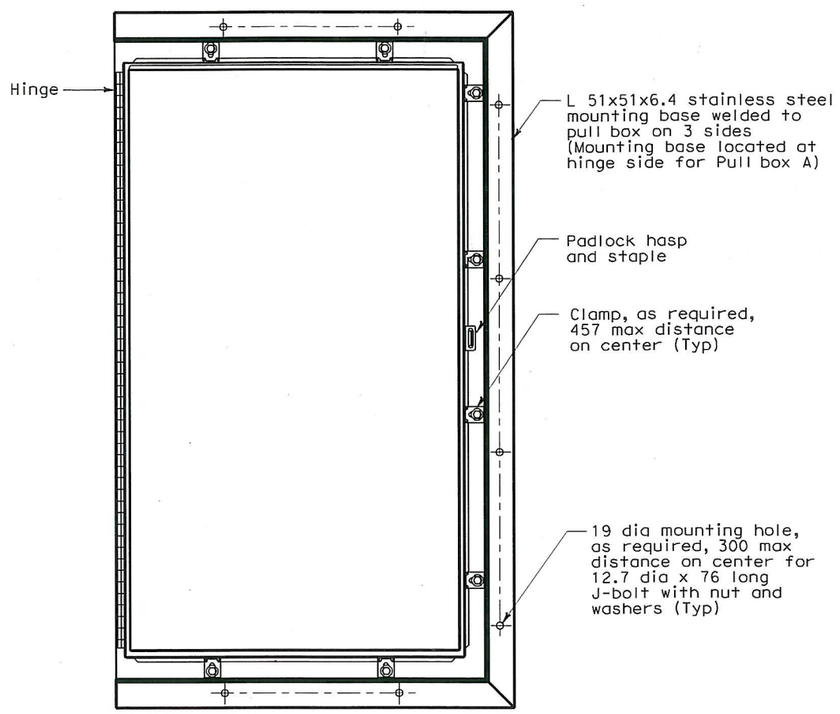

DETAIL 1A
TYPICAL PULL BOX - TOP PLAN VIEW (1)(2)
TYPICAL FOR PULL BOX A , B AND D

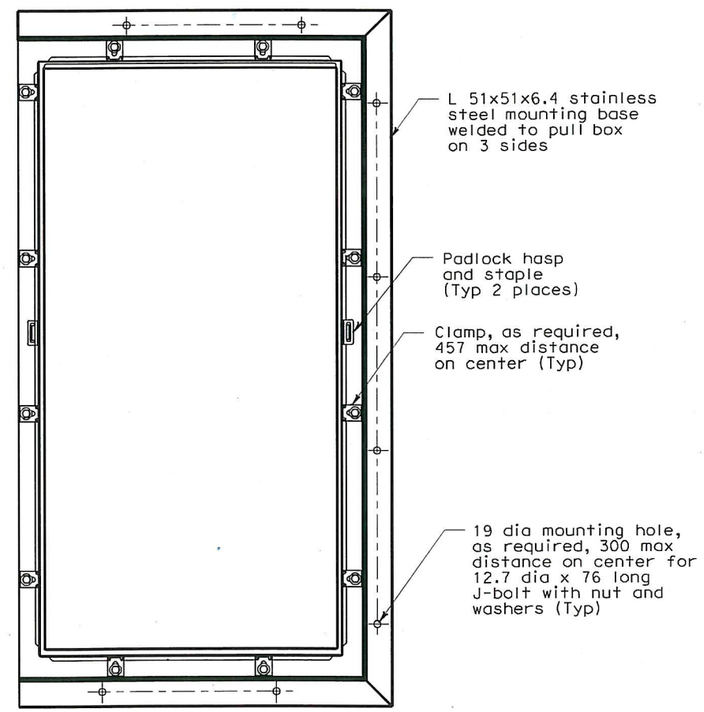

DETAIL 2A
PULL BOX C - TOP PLAN VIEW (2)

SHEET NOTES

(1) Furnish and install two gas charged lift supports to pull box door, gas lift support shall be sized for the individual door weight.

(2) Pull Box shall be fabricated of 304 stainless steel, 14 gage (except the bottom plate which shall be 10 gage), Nema type 4X in accordance with the applicable industry standard.

NOTES:

1. References:
   - For plan and additional notes, see sheet E-264A.
   - For pull box exploded view, see sheet E-264G.

REQUEST FOR INFORMATION NOT ADDRESSED IN THIS CCO REMAIN IN FORCE

MARK	DATE	DESCRIPTIONS	BY	CH'D	CCO#
0	09/18/09	TOWER UTILITY PANELS	RB	RG FW	70

REVISIONS

CONTRACT CHANGE ORDER NO. 70
SHEET 16 OF 45

DETAILS
TOWER AND SUSPENSION CABLE
TOWER POWER AND LIGHTING
NO SCALE

E-264H

THIS PLAN ACCURATE FOR ELECTRICAL WORK ONLY.

ALL DIMENSIONS ARE IN MILLIMETERS UNLESS OTHERWISE SHOWN.

FOR REDUCED PLANS ORIGINAL SCALE IS IN MILLIMETERS 0 20 40 60 80

DGN FILE =>t:\13103\ms\pse\SAS Struc\CCO\SAS CCO70\2009-12-02 issued for Submittal\04-0120f1_0271S07.dgn
USERNAME =>llorico

CU 04251 EA 0120F1

STATE OF CALIFORNIA - DEPARTMENT OF TRANSPORTATION
Caltrans

DESIGN OVERSIGHT
BEHZAD GOLEMOHAMMADI

CALCULATED/DESIGNED BY
CHECKED BY
DATE REVISED BY
DATE REVISED

LAST REVISION 00-00-00
DATE PLOTTED => 12/10/2009
TIME PLOTTED => 3:28:57 PM

DIST	COUNTY	ROUTE	KILOMETER POST TOTAL PROJECT	SHEET No	TOTAL SHEETS
04	SF	80	13.2/13.9	275 R1	1204

Jens Erlingsson 12/19/02
REGISTERED ELECTRICAL ENGINEER DATE

12-6-04
PLANS APPROVAL DATE

REGISTERED PROFESSIONAL ENGINEER JENS ERLINGSSON No. 8249 Exp. 9/30/06 ELECTRICAL STATE OF CALIFORNIA

PB POWER, Inc.
A Parsons Brinckerhoff Company
303 Second St., Suite 700N
San Francisco, CA 94107-1317

The State of California or its officers or agents shall not be responsible for the accuracy or completeness of electronic copies of this plan sheet.

Caltrans now has a web site! To get to the web site, go to http://www.dot.ca.gov

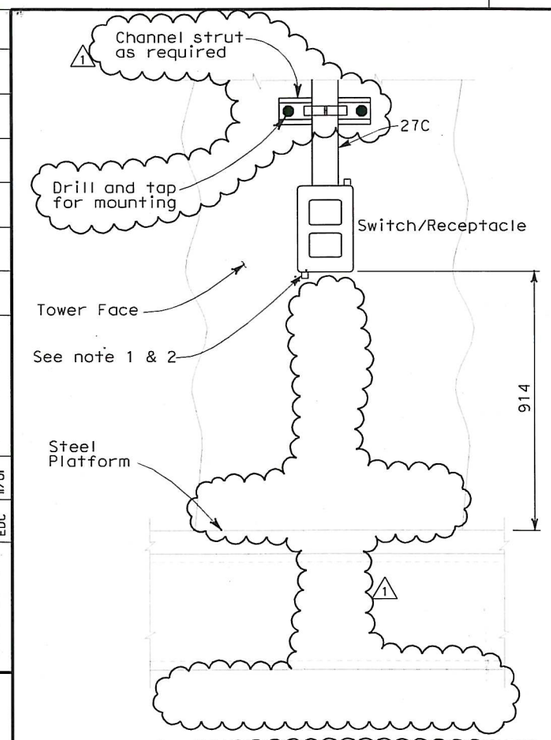

SURFACE MOUNT SWITCH/RECEPTACLE
MAIN TOWER PLATFORM

DETAIL 7
(See Note 3)

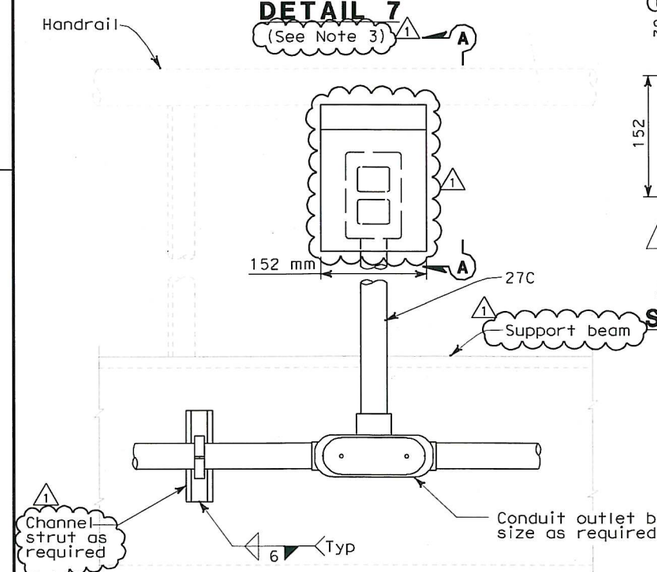

TYPICAL FOR SWITCH/RECEPTACLE
ALONG WALKWAYS INSIDE GIRDER AND CROSSBEAM

DETAIL 9
(See Note 3)

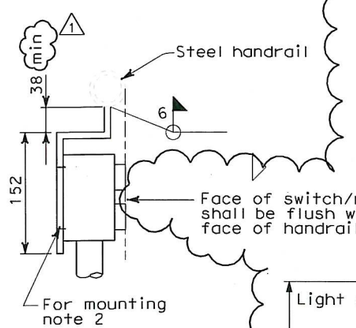

HANDRAIL MOUNT

SECTION A-A

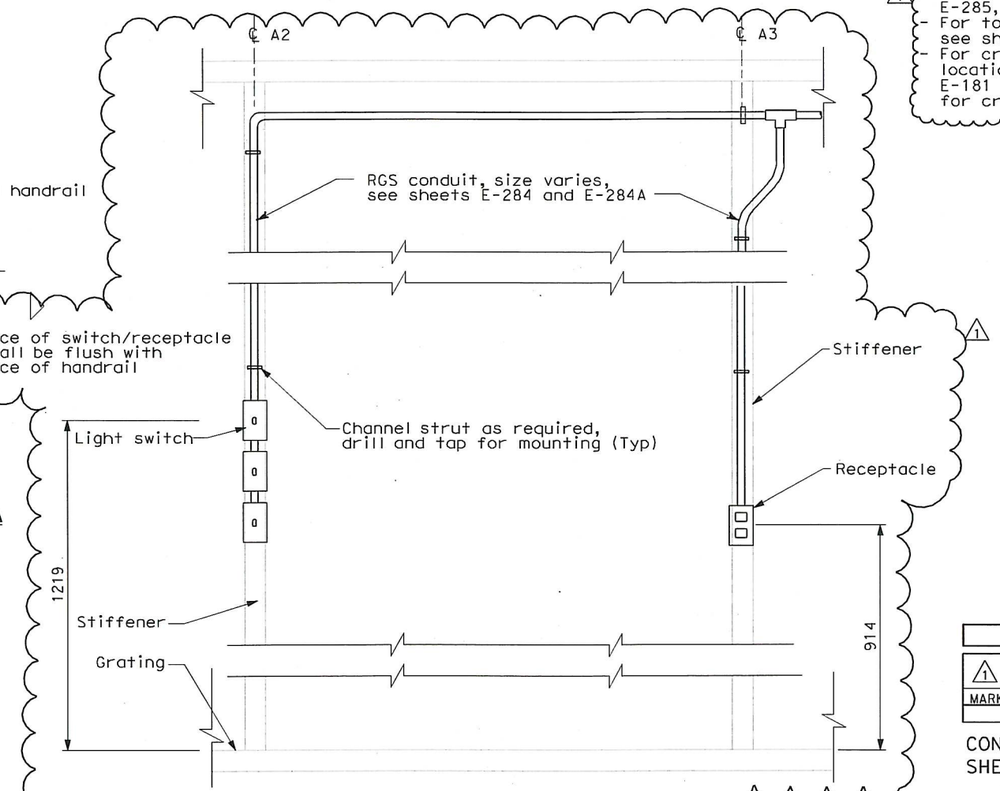

SURFACE MOUNT SWITCH/RECEPTACLE
INSIDE MAIN TOWER SHAFTS

DETAIL 8
(See Note 3)

ALL DIMENSIONS ARE IN MILLIMETERS UNLESS OTHERWISE SHOWN.

THIS PLAN ACCURATE FOR ELECTRICAL WORK ONLY.

NOTES:

1. Switches and receptacles are indicated in details to show mountings only.
2. Attach fixture, receptacle and conduit. For mounting to steel surfaces drill and tap structural member and attach equipment with hex head machine bolts as required. Verify mounting holes with each piece of equipment.
3. References:
   - For typical tower ladder platform lighting, switch and receptacle layout, see E-284 and E-284A.
   - For circuit and conduit/cable tray schedules, see sheets starting at E-401.
   - For tower shaft diaphragm lighting and receptacle locations, see sheets E-264B, E-274, E-275, E-275A, E-285, E-285A and E-286.
   - For tower platform lighting and receptacle locations, see sheets E-264B, E-285, E-285A, E-285D and E-286.
   - For crossbeam and girder lighting and receptacle locations, see E-96 thru E-101 for Westbound, E-181 thru E-186A for Eastbound and E-114 thru E-118 for crossbeam area.

REGISTERED PROFESSIONAL ENGINEER FADI WALIEDDINE No. 11465 Exp. 12/31/2009 ELECTRICAL STATE OF CALIFORNIA

FOR REVISION ONLY

REQUEST FOR INFORMATION NOT ADDRESSED IN THIS CCO REMAIN IN FORCE

MARK	DATE	DESCRIPTIONS	BY	CH'D	CCO#
1	12/02/09	TOWER UTILITY PANELS	JS	RG FW	70

REVISIONS

CONTRACT CHANGE ORDER NO. 70
SHEET 17 OF 45

DETAILS
TOWER AND SUSPENSION CABLE TYPICAL CONDUIT INSTALLATION

SCALE 1:5

E-268

DATE	REVISED BY	DATE	REVISED
10/01	FK	11/01	EDC

CALCULATED/DESIGNED BY FK
CHECKED BY EDC

DESIGN OVERSIGHT
BEHZAD GOLEMOHAMMADI

STATE OF CALIFORNIA - DEPARTMENT OF TRANSPORTATION
Caltrans

LAST REVISION 00-00-00
DATE PLOTTED => 12/10/2009
TIME PLOTTED => 3:29:17 PM

FOR REDUCED PLANS ORIGINAL SCALE IS IN MILLIMETERS 0 20 40 60 80

DGN FILE =>t:\13103\ms\pse\SAS Struc\CCO\SAS CCO70\2009-12-02 issued for Submittal\04-0120f1_0275R01.dgn
USERNAME =>llorico

CU 04251 EA 0120F1

DIST	COUNTY	ROUTE	KILOMETER POST TOTAL PROJECT	SHEET No	TOTAL SHEETS
04	SF	80	13.2/13.9	275 S2R1	1204

REGISTERED ELECTRICAL ENGINEER 8/24/07 DATE

PLANS APPROVAL DATE

REGISTERED PROFESSIONAL ENGINEER MAXWELL FUMIO TAGAMI No. E 8651 Exp. 9/30/2008 ELECTRICAL STATE OF CALIFORNIA

PB AMERICAS, Inc.
A Parsons Brinckerhoff Company
303 Second St., Suite 700N
San Francisco, CA 94107-1317

The State of California or its officers or agents shall not be responsible for the accuracy or completeness of electronic copies of this plan sheet.

Caltrans now has a web site! To get to the web site, go to http://www.dot.ca.gov

Caltrans Metric

TOWER 600 V CABLE TRAY LOCATION

CL DIAPHRAGM (ELEVATION)	BOTTOM END OF TRAY SECTION	TOP END OF TRAY SECTION	TOWER CABLE TRAY ID NW	NE	SW	SE
139.000 m	139.533 m	142.595 m	3T21S	3T23S	3T25S	3T27S
135.000 m	135.531 m	138.593 m	3T21R	3T23R	3T25R	3T27R
131.000 m	131.529 m	134.591 m	3T21Q	3T23Q	3T25Q	3T27Q
127.000 m	127.527 m	130.589 m	3T21P	3T23P	3T25P	3T27P
123.000 m	123.525 m	126.587 m	3T21N	3T23N	3T25N	3T27N
119.000 m	119.585 m	122.585 m	3T21M	3T23M	3T25M	3T27M
116.330 m	116.400 m	118.548 m	3T21L	3T23L	3T25L	3T27L
111.670 m	111.739 m	116.362 m	3T21K	3T23K	3T25K	3T27K
109.000 m	109.553 m	111.701 m	3T21J	3T23J	3T25J	3T27J
105.500 m	105.565 m	108.543 m	3T21H	3T23H	3T25H	3T27H
102.500 m	102.563 m	105.527 m	3T21G	3T23G	3T25G	3T27G
99.000 m	99.548 m	102.525 m	3T21F	3T23F	3T25F	3T27F
95.500 m	95.560 m	98.538 m	3T21E	3T23E	3T25E	3T27E
92.500 m	92.559 m	95.522 m	3T21D	3T23D	3T25D	3T27D
89.000 m	89.543 m	92.521 m	3T21C	3T23C	3T25C	3T27C
85.250 m	85.305 m	88.533 m	3T21B	3T23B	3T25B	3T27B
80.750 m	80.803 m	85.267 m	3T21A	3T23A	3T25A	3T27A
77.000 m	77.537 m	80.765 m	3T20S	3T22S	3T24S	3T26S
74.000 m	74.050 m	76.527 m	3T20R	3T22R	3T24R	3T26R
71.000 m	71.048 m	74.012 m	3T20Q	3T22Q	3T24Q	3T26Q
68.000 m	68.046 m	71.010 m	3T20P	3T22P	3T24P	3T26P
65.000 m	65.531 m	68.008 m	3T20N	3T22N	3T24N	3T26N
62.000 m	62.044 m	64.521 m	3T20M	3T22M	3T24M	3T26M
59.000 m	59.042 m	62.006 m	3T20L	3T22L	3T24L	3T26L
56.000 m	56.041 m	59.004 m	3T20K	3T22K	3T24K	3T26K
53.000 m	53.525 m	56.003 m	3T20J	3T22J	3T24J	3T26J
47.600 m	48.087 m	52.515 m	3T20H	3T22H	3T24H	3T26H
43.000 m	43.485 m	47.147 m	3T20G	3T22G	3T24G	3T26G
38.000 m	38.483 m	42.545 m	3T20F	3T22F	3T24F	3T26F
33.000 m	33.480 m	37.543 m	3T20E	3T22E	3T24E	3T26E
28.000 m	28.478 m	32.540 m	3T20D	3T22D	3T24D	3T26D
23.000 m	23.475 m	27.538 m	3T20C	3T22C	3T24C	3T26C
18.000 m	18.473 m	22.535 m	3T20B	3T22B	3T24B	3T26B
15.000 m	15.021 m	17.533 m	3T20AA	3T22AA	3T24AA	3T26AA
13.000 m	13.024 m	14.983 m	3T20A	3T22A	3T24A	3T26A

TOWER TOS/COM CABLE TRAY LOCATION

CL DIAPHRAGM (ELEVATION)	BOTTOM END OF TRAY SECTION	TOP END OF TRAY SECTION	TOWER CABLE TRAY ID NW	NE	SW	SE
139.000 m	139.533 m	142.595 m		3T43S	3T45S	3T47S
135.000 m	135.531 m	138.593 m		3T43R	3T45R	3T47R
131.000 m	131.529 m	134.591 m		3T43Q	3T45Q	3T47Q
127.000 m	127.527 m	130.589 m		3T43P	3T45P	3T47P
123.000 m	123.525 m	126.587 m		3T43N	3T45N	3T47N
119.000 m	119.585 m	122.585 m		3T43M	3T45M	3T47M
116.330 m	116.400 m	118.548 m		3T43L	3T45L	3T47L
111.670 m	111.739 m	116.362 m		3T43K	3T45K	3T47K
109.000 m	109.553 m	111.701 m		3T43J	3T45J	3T47J
105.500 m	105.565 m	108.543 m		3T43H	3T45H	3T47H
102.500 m	102.563 m	105.527 m		3T43G	3T45G	3T47G
99.000 m	99.548 m	102.525 m		3T43F	3T45F	3T47F
95.500 m	95.560 m	98.538 m		3T43E	3T45E	3T47E
92.500 m	92.559 m	95.522 m		3T43D	3T45D	3T47D
89.000 m	89.543 m	92.521 m		3T43C	3T45C	3T47C
85.250 m	85.305 m	88.533 m		3T43B	3T45B	3T47B
80.750 m	80.803 m	85.267 m		3T43A	3T45A	3T47A
77.000 m	77.537 m	80.765 m		3T42S	3T44S	3T46S
74.000 m	74.050 m	76.527 m		3T42R	3T44R	3T46R
71.000 m	71.048 m	74.012 m		3T42Q	3T44Q	3T46Q
68.000 m	68.046 m	71.010 m		3T42P	3T44P	3T46P
65.000 m	65.531 m	68.008 m		3T42N	3T44N	3T46N
62.000 m	62.044 m	64.521 m		3T42M	3T44M	3T46M
59.000 m	59.042 m	62.006 m		3T42L	3T44L	3T46L
56.000 m	56.041 m	59.004 m		3T42K	3T44K	3T46K
53.000 m	53.525 m	56.003 m		3T42J	3T44J	3T46J
47.600 m	48.087 m	52.515 m		3T42H	3T44H	3T46H
43.000 m	43.485 m	47.147 m		3T42G	3T44G	
38.000 m	38.483 m	42.545 m		3T42F	3T44F	
33.000 m	33.480 m	37.543 m		3T42E	3T44E	
28.000 m	28.478 m	32.540 m		3T42D	3T44D	
23.000 m	23.475 m	27.538 m		3T42C	3T44C	
18.000 m	18.473 m	22.535 m		3T42B	3T44B	
15.000 m	15.021 m	17.533 m		3T42AA	3T44AA	
13.000 m	13.024 m	14.983 m		3T42A	3T44A	

NOTES:

1. See Sheets E-270A and E-270C for tower cable trays location and typical installation details.
2. Deleted.
3. Kellems cable riser support grip shall be installed at top end of cable entering the cable tray. Maximum vertical spacing between cable grips is 30 m.

REGISTERED PROFESSIONAL ENGINEER FADI WALIEDDINE No. 11465 Exp. 12/31/2009 ELECTRICAL STATE OF CALIFORNIA

FOR REVISION ONLY

MARK	DATE	DESCRIPTIONS	BY	CH'D	CCO#
		REQUEST FOR INFORMATION NOT ADDRESSED IN THIS CCO REMAIN IN FORCE			
1	09/18/09	TOWER UTILITY PANELS	JS TW	RG FW	70
0	02/19/08	ELECTRICAL MODIFICATIONS	MP EL	RR	42

REVISIONS

CONTRACT CHANGE ORDER NO. 70
SHEET 18 OF 45

DETAILS
TOWER AND AND SUSPENSION CABLE CABLE TRAY LOCATION
SCALE AS NOTED

E-270B

DESIGN OVERSIGHT
BEHZAD GOLEMOHAMMADI

CALCULATED/DESIGNED BY RG DATE 3/07 REVISED BY
CHECKED BY RR DATE 7/07 DATE REVISED

STATE OF CALIFORNIA - DEPARTMENT OF TRANSPORTATION
Caltrans

LAST REVISION 00-00-00
DATE PLOTTED => 12/10/2009
TIME PLOTTED => 3:29:35 PM

FOR REDUCED PLANS ORIGINAL SCALE IS IN MILLIMETERS 0 20 40 60 80

DGN FILE =>t:\13103\ms\pse\SAS Struc\CCO\SAS CCO70\2009-12-02 issued for Submittal\04-0120f1_0275S02R01.dgn
USERNAME =>llorico

CU 04251 EA 0120F1

DIST	COUNTY	ROUTE	KILOMETER POST TOTAL PROJECT	SHEET No	TOTAL SHEETS
04	SF	80	13.2/13.9	279 R1	1204

Caltrans Metric

REGISTERED ELECTRICAL ENGINEER 12/19/02 DATE

12-6-04
PLANS APPROVAL DATE

REGISTERED PROFESSIONAL ENGINEER JENS ERLINGSSON No. 8249 Exp. 9/30/06 ELECTRICAL STATE OF CALIFORNIA

PB POWER, Inc.
A Parsons Brinckerhoff Company
303 Second St., Suite 700N
San Francisco, CA 94107-1317

The State of California or its officers or agents shall not be responsible for the accuracy or completeness of electronic copies of this plan sheet.

Caltrans now has a web site! To get to the web site, go to http://www.dot.ca.gov

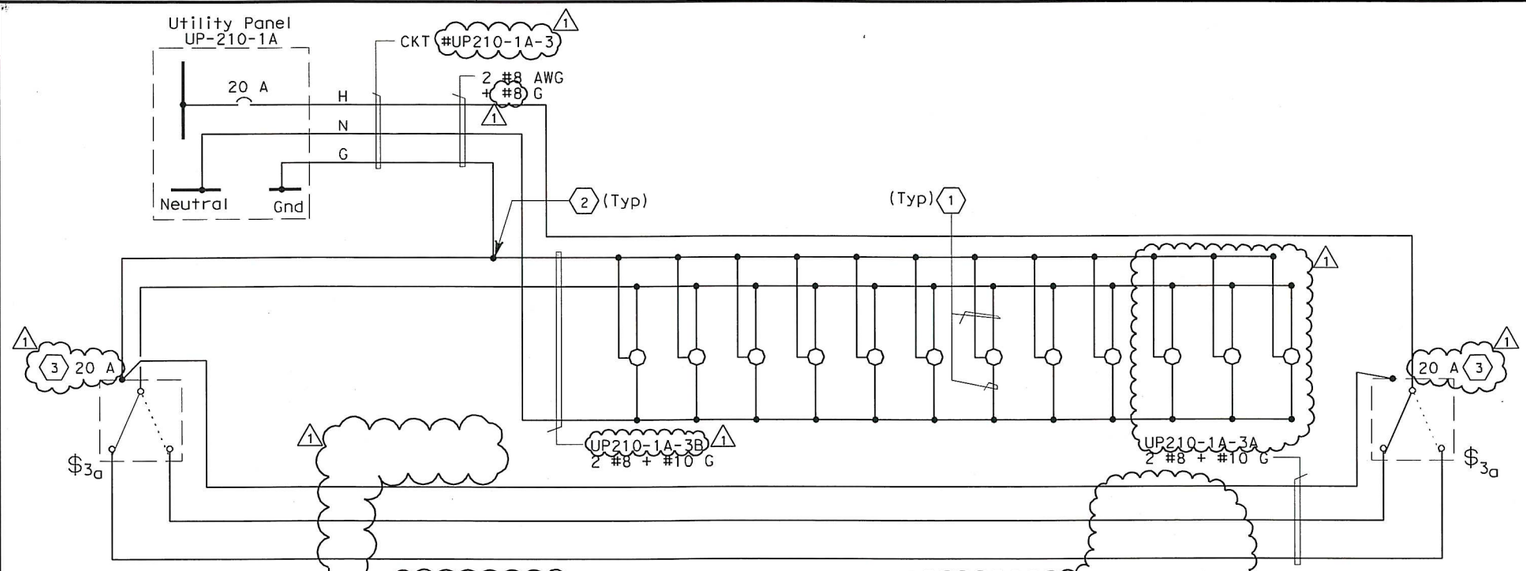

120V (UP-210-1A) TOWER PLATFORM ABOVE EL. 53.85 m LIGHTING SCHEMATIC DIAGRAM - SE, NE DIAPHRAGM

(SHOWN FOR CIRCUIT #UP210-1A-3 ONLY
SEE TABLE 1 AND TABLE 2 FOR OTHER CIRCUITS)

TABLE 1 (SE DIAPHRAGM)

Location At Tower Grating Elevation	Lighting At SE Tower Diaphragm CKT. Number	3-Way Switches CKT. Number	Receptacle CKT. Number
Elev 53.0	UP210-1A-3	UP210-1A-3	
Elev 56.0	UP210-1A-3		UP210-1A-4
Elev 59.0	UP210-1A-3		
Elev 62.0	UP210-1A-3		
Elev 65.0	UP210-1A-3		UP210-1A-4
Elev 68.0	UP210-1A-3		
Elev 71.0	UP210-1A-3		UP210-1A-4
Elev 74.0	UP210-1A-3		
Elev 77.0	UP210-1A-3		UP210-1A-4
Elev 80.75	UP210-1A-3		UP210-1A-4
Elev 85.25	UP210-1A-3		
Elev 89.0	UP210-1A-3	UP210-1A-3	
	UP210-1A-5 (SW)	UP210-1A-5 (SW)	UP210-1A-6
	UP210-1A-1	UP210-1A-1	
Elev 92.5	UP210-1A-1		
Elev 95.5	UP210-1A-1		
Elev 99.0	UP210-1A-1		UP210-1A-6
Elev 102.5	UP210-1A-1		
Elev 105.5	UP210-1A-1		UP210-1A-6
Elev 109.0	UP210-1A-1		
Elev 111.67	UP210-1A-1		
Elev 116.33	UP210-1A-1		UP210-1A-6
Elev 119.0	UP210-1A-1		
Elev 123.0	UP210-1A-1		
Elev127.0	UP210-1A-1		
Elev131.0	UP210-1A-1		
Elev135.0	UP210-1A-1		
Elev139.0	UP210-1A-1	UP210-1A-1	UP210-1A-6

TABLE 2 (NE DIAPHRAGM)

Location At Tower Grating Elevation	Lighting At NE Tower Diaphragm CKT. Number	3-Way Switches CKT. Number	Receptacle CKT. Number
Elev 53.0	UP210-1A-9	UP210-1A-9	
Elev 56.0	UP210-1A-9		UP210-1A-10
Elev 59.0	UP210-1A-9		
Elev 62.0	UP210-1A-9		
Elev 65.0	UP210-1A-9		UP210-1A-10
Elev 68.0	UP210-1A-9		
Elev 71.0	UP210-1A-9		UP210-1A-10
Elev 74.0	UP210-1A-9		
Elev 77.0	UP210-1A-9		UP210-1A-10
Elev 80.75	UP210-1A-9		UP210-1A-10
Elev 85.25	UP210-1A-9		
Elev 89.0	UP210-1A-9	UP210-1A-9	
	UP210-1A-11	UP210-1A-11	UP210-1A-12
Elev 92.5	UP210-1A-11		
Elev 95.5	UP210-1A-11		
Elev 99.0	UP210-1A-11		UP210-1A-12
Elev 102.5	UP210-1A-11		
Elev 105.5	UP210-1A-11		UP210-1A-12
Elev 109.0	UP210-1A-11		
Elev 111.67	UP210-1A-11		
Elev 116.33	UP210-1A-11		UP210-1A-12
Elev 119.0	UP210-1A-11		
Elev 123.0	UP210-1A-11		
Elev127.0	UP210-1A-11		
Elev131.0	UP210-1A-11		
Elev135.0	UP210-1A-11		
Elev139.0	UP210-1A-11	UP210-1A-11	UP210-1A-12

SHEET NOTES:

1. 2 #10, 1#10 G AWG single conductors.
2. Conductors to be spliced.
3. Light switch shall be rated 30 A for CKT #UP210-1A-1 and CKT #UP210-1A-11.

NOTES:

1. References:
   - For utility panel schedule, see sheet E-279.
   - For circuit, conduit and cable tray schedules, see sheets starting at E-401.
   - For typical tower ladder platform lighting and power plans, see sheets E-284 & E-284A.

REGISTERED PROFESSIONAL ENGINEER FADI WALIEDDINE No. 11465 Exp. 12/31/2009 ELECTRICAL STATE OF CALIFORNIA

FOR REVISION ONLY

MARK	DATE	DESCRIPTIONS	BY	CH'D	CCO#
1	09/18/09	TOWER UTILITY PANELS	JS TW	RG FW	70

REQUEST FOR INFORMATION NOT ADDRESSED IN THIS CCO REMAIN IN FORCE

REVISIONS

CONTRACT CHANGE ORDER NO. 70
SHEET 19 OF 45

DETAILS
TOWER AND SUSPENSION CABLE 120 V PIER LIGHTING WIRING DIAGRAM
NO SCALE

E-274

REVISED BY	DATE REVISED

CALCULATED/DESIGNED BY	DATE 10/01
FK	
CHECKED BY	EDC 11/01

DESIGN OVERSIGHT
BEHZAD GOLEMOHAMMADI

STATE OF CALIFORNIA - DEPARTMENT OF TRANSPORTATION
Caltrans

LAST REVISION 00-00-00
DATE PLOTTED => 12/10/2009
TIME PLOTTED => 3:29:53 PM

FOR REDUCED PLANS ORIGINAL SCALE IS IN MILLIMETERS 0 20 40 60 80

DGN FILE =>t:\13103\ms\pse\SAS Struc\CCO\SAS CC070\2009-12-02 issued for Submittal\04-0120f1_0279R01.dgn
USERNAME =>llorico
CU 04251
EA 0120F1

DIST	COUNTY	ROUTE	KILOMETER POST TOTAL PROJECT	SHEET No	TOTAL SHEETS
04	SF	80	13.2/13.9	280 R1	1204

12/19/02
REGISTERED ELECTRICAL ENGINEER DATE

12-6-04
PLANS APPROVAL DATE

REGISTERED PROFESSIONAL ENGINEER JENS ERLINGSSON No. 8249 Exp. 9/30/06 ELECTRICAL STATE OF CALIFORNIA

PB POWER, Inc.
A Parsons Brinckerhoff Company
303 Second St., Suite 700N
San Francisco, CA 94107-1317

The State of California or its officers or agents shall not be responsible for the accuracy or completeness of electronic copies of this plan sheet.

Caltrans now has a web site! To get to the web site, go to http://www.dot.ca.gov

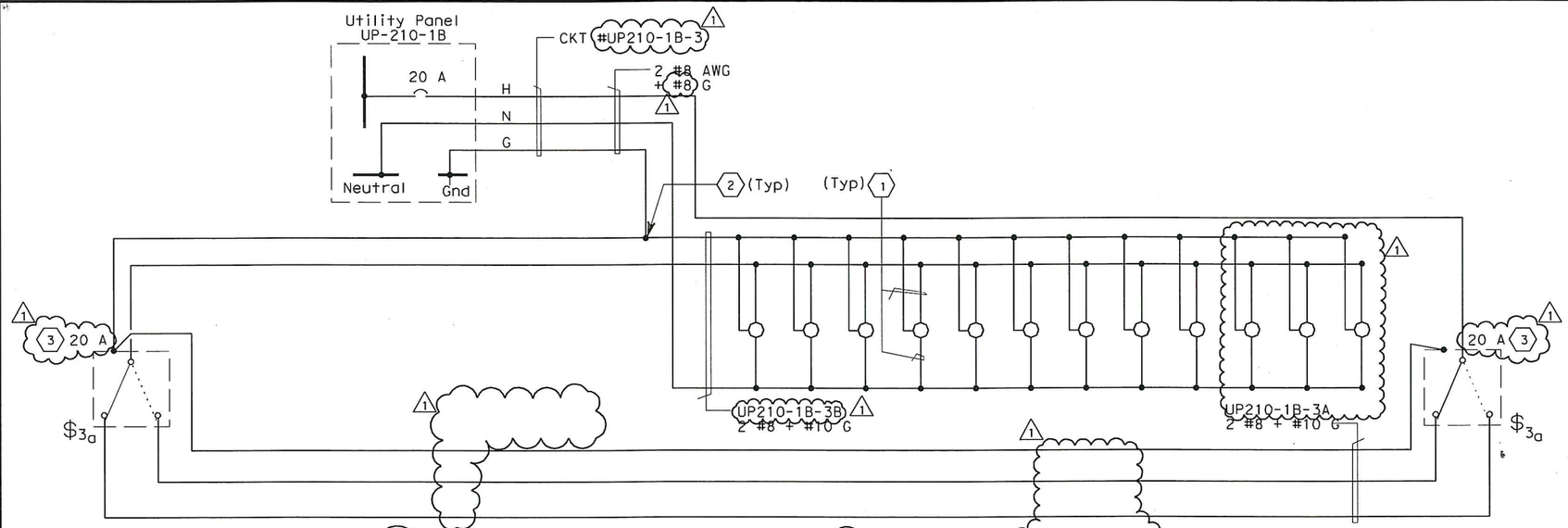

120V (UP210-1B) TOWER PLATFORM ABOVE EL. 53.85 m LIGHTING SCHEMATIC DIAGRAM - SW, NW DIAPHRAGM

(SHOWN FOR CIRCUIT #UP210-1B-3 ONLY
SEE TABLE 3 AND TABLE 4 FOR OTHER CIRCUITS)

TABLE 3 (SW DIAPHRAGM)

Location At Tower Grating Elevation	Lighting At SW Tower Diaphragm CKT. Number	3-Way Switches CKT. Number	Receptacle CKT. Number
Elev 53.0	UP210-1B-3	UP210-1B-3	
Elev 56.0	UP210-1B-3		UP210-1B-4
Elev 59.0	UP210-1B-3		
Elev 62.0	UP210-1B-3		
Elev 65.0	UP210-1B-3		UP210-1B-4
Elev 68.0	UP210-1B-3		
Elev 71.0	UP210-1B-3		UP210-1B-4
Elev 74.0	UP210-1B-3		
Elev 77.0	UP210-1B-3		UP210-1B-4
Elev 80.75	UP210-1B-3		UP210-1B-4
Elev 85.25	UP210-1B-3		
Elev 89.0	UP210-1B-3	UP210-1B-3	
	UP210-1B-5 (SE)	UP210-1B-5 (SE)	UP210-1B-6
Elev 92.5	UP210-1B-1	UP210-1B-1	
Elev 95.5	UP210-1B-1		
Elev 99.0	UP210-1B-1		UP210-1B-6
Elev 102.5	UP210-1B-1		
Elev 105.5	UP210-1B-1		UP210-1B-6
Elev 109.0	UP210-1B-1		
Elev 111.67	UP210-1B-1		
Elev 116.33	UP210-1B-1		UP210-1B-6
Elev 119.0	UP210-1B-1		
Elev 123.0	UP210-1B-1		
Elev 127.0	UP210-1B-1		
Elev 131.0	UP210-1B-1		
Elev 135.0	UP210-1B-1		
Elev 139.0	UP210-1B-1	UP210-1B-1	UP210-1B-6

TABLE 4 (NW DIAPHRAGM)

Location At Tower Grating Elevation	Lighting At NW Tower Diaphragm CKT. Number	3-Way Switches CKT. Number	Receptacle CKT. Number
Elev 53.0	UP210-1B-9	UP210-1B-9	
Elev 56.0	UP210-1B-9		UP210-1B-10
Elev 59.0	UP210-1B-9		
Elev 62.0	UP210-1B-9		
Elev 65.0	UP210-1B-9		UP210-1B-10
Elev 68.0	UP210-1B-9		
Elev 71.0	UP210-1B-9		UP210-1B-10
Elev 74.0	UP210-1B-9		
Elev 77.0	UP210-1B-9		UP210-1B-10
Elev 80.75	UP210-1B-9		UP210-1B-10
Elev 85.25	UP210-1B-9		
Elev 89.0	UP210-1B-9	UP210-1B-9	
	UP210-1B-11	UP210-1B-11	UP210-1B-12
Elev 92.5	UP210-1B-11		
Elev 95.5	UP210-1B-11		
Elev 99.0	UP210-1B-11		UP210-1B-12
Elev 102.5	UP210-1B-11		
Elev 105.5	UP210-1B-11		UP210-1B-12
Elev 109.0	UP210-1B-11		
Elev 111.67	UP210-1B-11		
Elev 116.33	UP210-1B-11		UP210-1B-12
Elev 119.0	UP210-1B-11		
Elev 123.0	UP210-1B-11		
Elev 127.0	UP210-1B-11		
Elev 131.0	UP210-1B-11		
Elev 135.0	UP210-1B-11		
Elev 139.0	UP210-1B-11	UP210-1B-11	UP210-1B-12

Caltrans Metric

SHEET NOTES:

1. 2#10, 1#10 G AWG single conductors.
2. Conductors spliced.
3. Light switch shall be rated 30 A for CKT #UP210-1B-1 and CKT #UP210-1B-11.

NOTES:

1. References:
   - For utility panel schedule, see sheet E-280.
   - For circuit, conduit and cable tray schedules, see sheets starting at E-401.
   - For typical tower ladder platform lighting and power plans, see sheets E-284 & E-284A.

REGISTERED PROFESSIONAL ENGINEER FADI WALIEDDINE No. 11465 Exp. 12/31/2009 ELECTRICAL STATE OF CALIFORNIA

FOR REVISION ONLY

REQUEST FOR INFORMATION NOT ADDRESSED IN THIS CCO REMAIN IN FORCE

MARK	DATE	DESCRIPTIONS	BY	CH'D	CCO#
1	09/18/09	TOWER UTILITY PANELS	JS TW	RG FW	70

REVISIONS

CONTRACT CHANGE ORDER NO. 70
SHEET 20 OF 45

DETAILS
TOWER AND SUSPENSION CABLE 120 V PIER LIGHTING WIRING DIAGRAM
NO SCALE

E-275

CALCULATED/DESIGNED BY	FK	DATE 10/01	REVISED BY
CHECKED BY	EDC	11/01	DATE REVISED

DESIGN OVERSIGHT
BEHZAD GOLEMOHAMMADI

STATE OF CALIFORNIA - DEPARTMENT OF TRANSPORTATION
Caltrans

LAST REVISION 00-00-00
DATE PLOTTED => 12/10/2009
TIME PLOTTED => 3:32:57 PM

FOR REDUCED PLANS ORIGINAL SCALE IS IN MILLIMETERS 0 20 40 60 80

DGN FILE =>t:\13103\ms\pse\SAS Struc\CCO\SAS CCO70\2009-12-02 issued for Submittal\04-0120f1_0280R01.dgn
USERNAME =>llorico

CU 04251 EA 0120F1

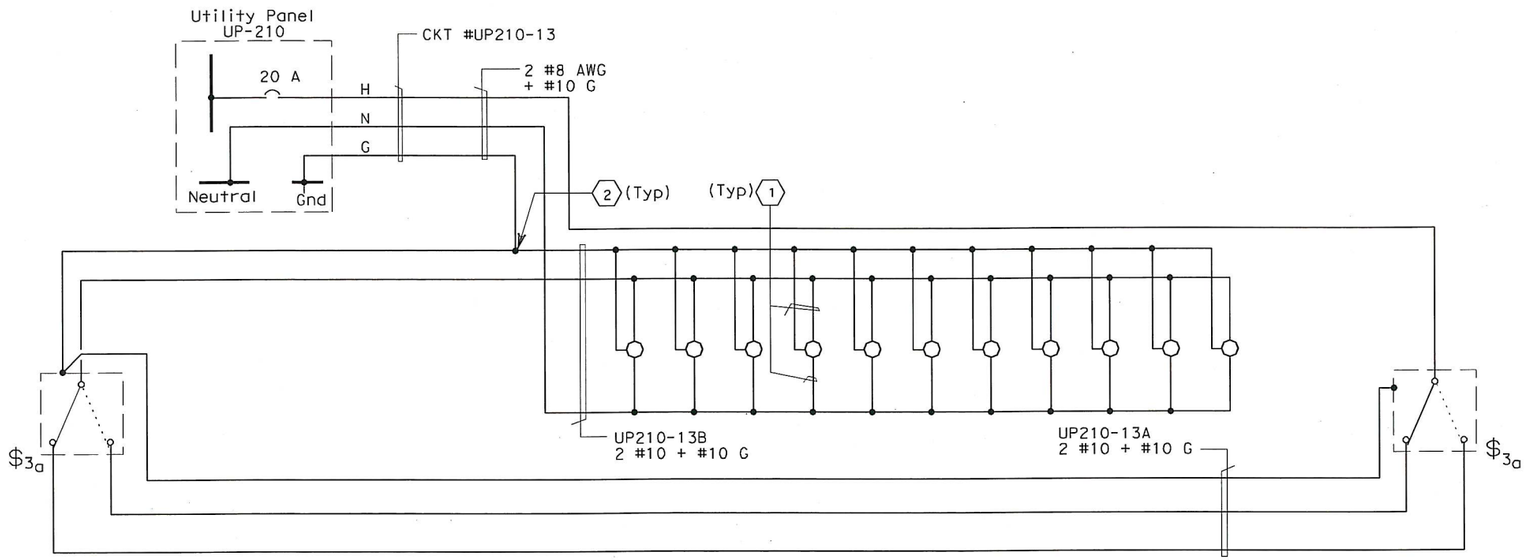

120V (UP210) TOWER PLATFORM EL. 53.85 m AND BELOW LIGHTING SCHEMATIC DIAGRAM - ALL DIAPHRAGMS

(SHOWN FOR CIRCUIT #UP210-13 ONLY
SEE TABLE 5, 6, 7 AND 8 FOR OTHER CIRCUITS)

TABLE 5 (SE DIAPHRAGM)

Location At Tower Grating Elevation	Lighting At SE Tower Diaphragm CKT. Number	3-Way Switches CKT. Number	Receptacle CKT. Number
Elev 9.0	UP210-13	UP210-13	
Elev 13.0	UP210-13		UP210-17
Elev 15.0	UP210-13		
Elev 18.0	UP210-13		UP210-17
Elev 23.0	UP210-13		
Elev 28.0	UP210-13		UP210-17
Elev 33.0	UP210-13		UP210-17
Elev 38.0	UP210-13		
Elev 43.0	UP210-13		
Elev 47.6	UP210-13		UP210-17
Elev 53.0	UP210-13	UP210-13	UP210-17

TABLE 6 (NE DIAPHRAGM)

Location At Tower Grating Elevation	Lighting At NE Tower Diaphragm CKT. Number	3-Way Switches CKT. Number	Receptacle CKT. Number
Elev 9.0	UP210-15	UP210-15	
Elev 13.0	UP210-15		UP210-19
Elev 15.0	UP210-15		
Elev 18.0	UP210-15		UP210-19
Elev 23.0	UP210-15		
Elev 28.0	UP210-15		UP210-19
Elev 33.0	UP210-15		UP210-19
Elev 38.0	UP210-15		
Elev 43.0	UP210-15		
Elev 47.6	UP210-15		UP210-19
Elev 53.0	UP210-15	UP210-15	UP210-19

TABLE 7 (SW DIAPHRAGM)

Location At Tower Grating Elevation	Lighting At SW Tower Diaphragm CKT. Number	3-Way Switches CKT. Number	Receptacle CKT. Number
Elev 9.0	UP210-14	UP210-14	
Elev 13.0	UP210-14		UP210-18
Elev 15.0	UP210-14		
Elev 18.0	UP210-14		UP210-18
Elev 23.0	UP210-14		
Elev 28.0	UP210-14		UP210-18
Elev 33.0	UP210-14		UP210-18
Elev 38.0	UP210-14		
Elev 43.0	UP210-14		
Elev 47.6	UP210-14		UP210-18
Elev 53.0	UP210-14	UP210-14	UP210-18

TABLE 8 (NW DIAPHRAGM)

Location At Tower Grating Elevation	Lighting At NW Tower Diaphragm CKT. Number	3-Way Switches CKT. Number	Receptacle CKT. Number
Elev 9.0	UP210-16	UP210-16	
Elev 13.0	UP210-16		UP210-20
Elev 15.0	UP210-16		
Elev 18.0	UP210-16		UP210-20
Elev 23.0	UP210-16		
Elev 28.0	UP210-16		UP210-20
Elev 33.0	UP210-16		UP210-20
Elev 38.0	UP210-16		
Elev 43.0	UP210-16		
Elev 47.6	UP210-16		UP210-20
Elev 53.0	UP210-16	UP210-16	UP210-20

Caltrans Metric

DIST	COUNTY	ROUTE	KILOMETER POST TOTAL PROJECT	SHEET No	TOTAL SHEETS
04	SF	80	13.2/13.9	280 S1	1204

REGISTERED ELECTRICAL ENGINEER DATE

PLANS APPROVAL DATE

REGISTERED PROFESSIONAL ENGINEER FADI WALIEDDINE No. 11465 Exp. 12/31/2009 ELECTRICAL STATE OF CALIFORNIA

PB AMERICAS, Inc.
A Parsons Brinckerhoff Company
303 Second St., Suite 700N
San Francisco, CA 94107-1317

The State of California or its officers or agents shall not be responsible for the accuracy or completeness of electronic copies of this plan sheet.

Caltrans now has a web site! To get to the web site, go to http://www.dot.ca.gov

SHEET NOTES:

(1) 2#10, 1#10 G AWG single conductors.

(2) Conductors spliced.

NOTES:

1. References:
   - For utility panel schedule, see sheet E-278.
   - For circuit, conduit and cable tray schedules, see sheets starting at E-401.
   - For typical tower ladder platform lighting, and power plan, see sheet E-284.

REQUEST FOR INFORMATION NOT ADDRESSED IN THIS CCO REMAIN IN FORCE

MARK	DATE	DESCRIPTIONS	BY	CH'D	CCO#
0	09/18/09	TOWER UTILITY PANELS	JS TW	RG FW	70

REVISIONS

CONTRACT CHANGE ORDER NO. 70
SHEET 21 OF 45

DETAILS
TOWER AND SUSPENSION CABLE
120 V PIER LIGHTING WIRING DIAGRAM

NO SCALE

E-275A

DATE REVISED BY | DATE REVISED
CALCULATED/DESIGNED BY | CHECKED BY
DESIGN OVERSIGHT
BEHZAD GOLEMOHAMMADI

STATE OF CALIFORNIA - DEPARTMENT OF TRANSPORTATION
Caltrans

LAST REVISION 00-00-00 | DATE PLOTTED => 12/10/2009 | TIME PLOTTED => 3:33:19 PM

FOR REDUCED PLANS ORIGINAL SCALE IS IN MILLIMETERS 0 20 40 60 80

DGN FILE =>t:\13103\ms\pse\SAS Struc\CCO\SAS CCO70\2009-12-02 issued for Submittal\04-0120f1_0280S01.dgn
USERNAME =>llorico

CU 04251 | EA 0120F1

DIST	COUNTY	ROUTE	KILOMETER POST TOTAL PROJECT	SHEET No	TOTAL SHEETS
04	SF	80	13.2/13.9	281 R2	1204

REGISTERED ELECTRICAL ENGINEER 12/19/02 DATE

12-6-04
PLANS APPROVAL DATE

REGISTERED PROFESSIONAL ENGINEER JENS ERLINGSSON No. 8249 Exp. 9/30/06 ELECTRICAL STATE OF CALIFORNIA

PB POWER, Inc.
A Parsons Brinckerhoff Company
303 Second St., Suite 700N
San Francisco, CA 94107-1317

The State of California or its officers or agents shall not be responsible for the accuracy or completeness of electronic copies of this plan sheet.

Caltrans now has a web site! To get to the web site, go to http://www.dot.ca.gov

Caltrans Metric

UTILITY PANEL UP-210 (CKT #2123)

Location: PIER 1 TOWER AT PLATFORM ELEV 53.85 m

LOAD DESCRIPTION	LTG	REC	OTH.	CB		CB	LTG	REC	OTH.	LOAD DESCRIPTION
Spare				20/1	1 A 2	30/1	2002			Tower Base LTG (14) @ EL. 9.0 m
Fog Detection Panel FDP-5			2880	30/1	3 B 4	20/1		900		Recept Tower Base (5) @ EL. 9.0 m
Sump Pump @ Elev 3.000 m Sump P-A			12	20/1	5 C 6	30/1	2145			Tower Base LTG (15) @ EL. 9.0 m
Sump Pump @ Elev 3.000 m Sump P-B			12	20/1	7 A 8	20/1		900		Recept Tower Base (5) @ EL. 9.0 m
Elevator Light & Fan			220	20/1	9 B 10	20/1	287			Platform LTG (7) @ EL. 53.85 m
Recept Platform (5) @ EL. 53.85 m		900		20/1	11 C 12	20/1			900	Strong Motion Recorder #3
SE Ltg.Tower Diaphragm (11) @ Elev 13.00 - 53.85 m	1573			20/1	13 A 14	20/1	1573			SW Ltg.Tower Diaphragm (11) @ Elev 13.00 - 53.85 m
NE Ltg.Tower Diaphragm (11) @ Elev 13.00 - 53.85 m	1573			20/1	15 B 16	20/1	1573			NW Ltg.Tower Diaphragm (11) @ Elev 13.00 - 53.85 m
Recept. (6) SE Tower Diaphragm @ Elev 13.00 - 53.85 m		1080		20/1	17 C 18	20/1		1080		Recept. (6) SW Tower Diaphragm @ Elev 13.00 - 53.85 m
Recept. (6) NE Tower Diaphragm @ Elev 13.00 - 53.85 m		1080		20/1	19 A 20	20/1		1080		Recept. (6) NW Tower Diaphragm @ Elev 13.00 - 53.85 m
Spare				20/1	21 B 22	20/1				Spare
				20/1	23 C 24	20/1				
				20/1	25 A 26	20/1				
				20/1	27 B 28	20/1				
Spare				20/1	29 C 30	20/1				Spare
TOTAL VA	3146	3060	3124				7580	3960	900	TOTAL VA

LOAD SUMMARY (INCLUDES .90PF) (VA)

Lighting (At 100%): 10726
Gen Use (1st 10 kVA AT 100% Plus 50% of remainder): 522

TOTAL kVA: 21.770

BALANCE (kVA)

Phase A - 8.220
Phase B - 7.433
Phase C - 6.117

VOLTAGE: 208/120 V
PHASE/WIRES: 3-Phase, 4-Wire
BUS RATING: 100 A
MAIN: 100 A Frame
MOUNTING: Surface
K.A.I.C.: 10

FEEDER ENTRY: TOP RIGHT

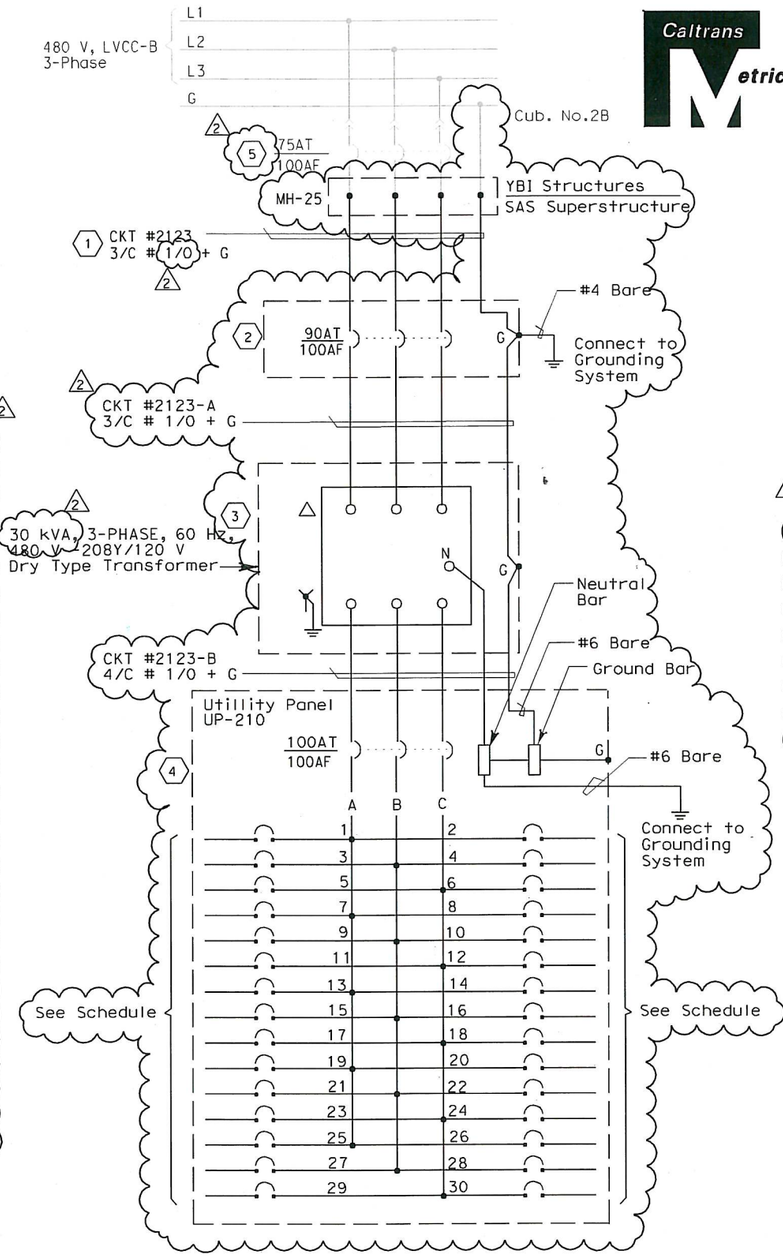

SHEET NOTES:

1. The Contractor shall extend and coil 5 meters of cable in Manhole-25. All cables shall be tagged with circuit number as shown (YBI-1 contract).
2. Enclosed type circuit breaker in NEMA type 4x stainless steel enclosure.
3. Dry type step down transformer with copper winding in NEMA type 4x stainless steel enclosure.
4. Panelboard w/ 100A copper bus in NEMA type 4x stainless steel enclosure.
5. As-built feeder circuit breaker rating per YBI Substation contract. Feeder conductor size accomplished by YBI-1 contract.

NOTES:

1. The Contractor shall provide nameplates and circuit schedules as shown.
2. Deleted.
3. References:
   - For conduit and cable tray schedules, see sheets starting at E-401.
   - For pull box schedules, see sheets E-83 and E-169.
   - For elevator pit circuits, see sheet E-265.
   - For LVCC-B single line diagram, see sheets E-32 through E-34.
   - For equipment location and arrangement, see sheets E-264B E-264C.

REGISTERED PROFESSIONAL ENGINEER FADI WALIEDDINE No. 11465 Exp. 12/31/2009 ELECTRICAL STATE OF CALIFORNIA

FOR REVISION ONLY 1 2

REQUEST FOR INFORMATION NOT ADDRESSED IN THIS CCO REMAIN IN FORCE

MARK	DATE	DESCRIPTIONS	BY	CH'D	CCO#
2	09/18/09	TOWER UTILITY PANELS	JS TW	RG FW	70
1	04/10/09	ELECTRICAL WARNING SYSTEMS	JS TW	RG FW	61

REVISIONS

CONTRACT CHANGE ORDER NO. 70
SHEET 22 OF 45

DETAILS
TOWER AND SUSPENSION CABLE PANEL UP-210 SCHEDULE
NO SCALE

E-278

REVISED BY	DATE REVISED
AB	2/04

CALCULATED/DESIGNED BY	CHECKED BY
FK	EDC
DATE 10/01	11/01

DESIGN OVERSIGHT
BEHZAD GOLEMOHAMMADI

STATE OF CALIFORNIA - DEPARTMENT OF TRANSPORTATION
Caltrans

LAST REVISION 00-00-00
DATE PLOTTED => 12/10/2009
TIME PLOTTED => 3:33:38 PM

FOR REDUCED PLANS ORIGINAL SCALE IS IN MILLIMETERS 0 20 40 60 80

DGN FILE =>t:\13103\ms\pse\SAS Struc\CCO\SAS CCO70\2009-12-02 issued for Submittal\04-0120f1_0281R02.dgn
USERNAME =>llorico
CU 04251
EA 0120F1

DIST	COUNTY	ROUTE	KILOMETER POST TOTAL PROJECT	SHEET No	TOTAL SHEETS
04	SF	80	13.2/13.9	282 R1	1204

REGISTERED ELECTRICAL ENGINEER 12/19/02 DATE

12-6-04
PLANS APPROVAL DATE

REGISTERED PROFESSIONAL ENGINEER JENS ERLINGSSON No. 8249 Exp. 9/30/06 ELECTRICAL STATE OF CALIFORNIA

PB POWER, Inc.
A Parsons Brinckerhoff Company
303 Second St., Suite 700N
San Francisco, CA 94107-1317

The State of California or its officers or agents shall not be responsible for the accuracy or completeness of electronic copies of this plan sheet.

Caltrans now has a web site! To get to the web site, go to http://www.dot.ca.gov

Caltrans Metric

UTILITY PANEL UP-210-1A (CKT #2123-2) Location: PIER 1 TOWER AT SE SHAFT PLATFORM ELEV 89.00 m (1)

LOAD DESCRIPTION	LTG	REC	OTH.	CB			CB	LTG	REC	OTH.	LOAD DESCRIPTION
SE Ltg.Tower Diaphragm (15) @ Elev 89.00 - 143.00 m	2070			30/1	1	A 2	20/1				Spare (1)
SE Ltg.Tower Diaphragm (12) @ Elev 53.00 - 89.00 m	1430	(1)		20/1	3	B 4	20/1		900		Recept. (5) SE Tower Diaphragm @ Elev 53.00 - 89.00 m
SW Ltg.Elect. Dist Equip. @ Elev 89.00 m	143			20/1	5	C 6	20/1		900		Recept. (5) SE Tower Diaphragm @ Elev 89.00 - 143.00 m
Spare (1)	(1)	(1)		20/1	7	A 8	20/1				Spare (1)
NE Ltg.Tower Diaphragm (12) @ Elev 53.00 - 89.00 m	1430			20/1	9	B 10	20/1		900		Recept. (5) NE Tower Diaphragm @ Elev 53.00 - 89.00 m
NE Ltg.Tower Diaphragm (15) @ Elev 89.00 - 143.00 m	2070	(1)		30/1	11	C 12	20/1		900		Recept. (5) NE Tower Diaphragm @ Elev 89.00 - 143.00 m
Platform Ltg. (24) @ Elev 154.6 m to 156.75 m	984	(1)		20/1	13	A 14	20/1		900		Recept. (5) Platform @ Elev 154.6 m to 156.75 m
Spare				20/1	15	B 16	20/1				Spare
				20/1	17	C 18	20/1				
				20/1	19	A 20	20/1				
				20/1	21	B 22	20/1				
				20/1	23	C 24	20/1				
TOTAL VA	8127								4500		TOTAL VA

LOAD SUMMARY (INCLUDES .90 PF)	(VA)	BALANCE (kVA)	
Lighting (At 100%):	8127	Phase A -	3.954
Gen Use (1st 10 kVA at 100% Plus 50% of remainder):	4500	Phase B -	4.660
		Phase C -	4.013

VOLTAGE: 208/120 V
PHASE/WIRES: 3-Phase, 4-Wire
BUS RATING: 100 A
MAIN: 100 AF
MOUNTING: Surface
K.A.I.C.: 10

TOTAL kVA: 12.627 FEEDER ENTRY: BOTTOM LEFT

(1)

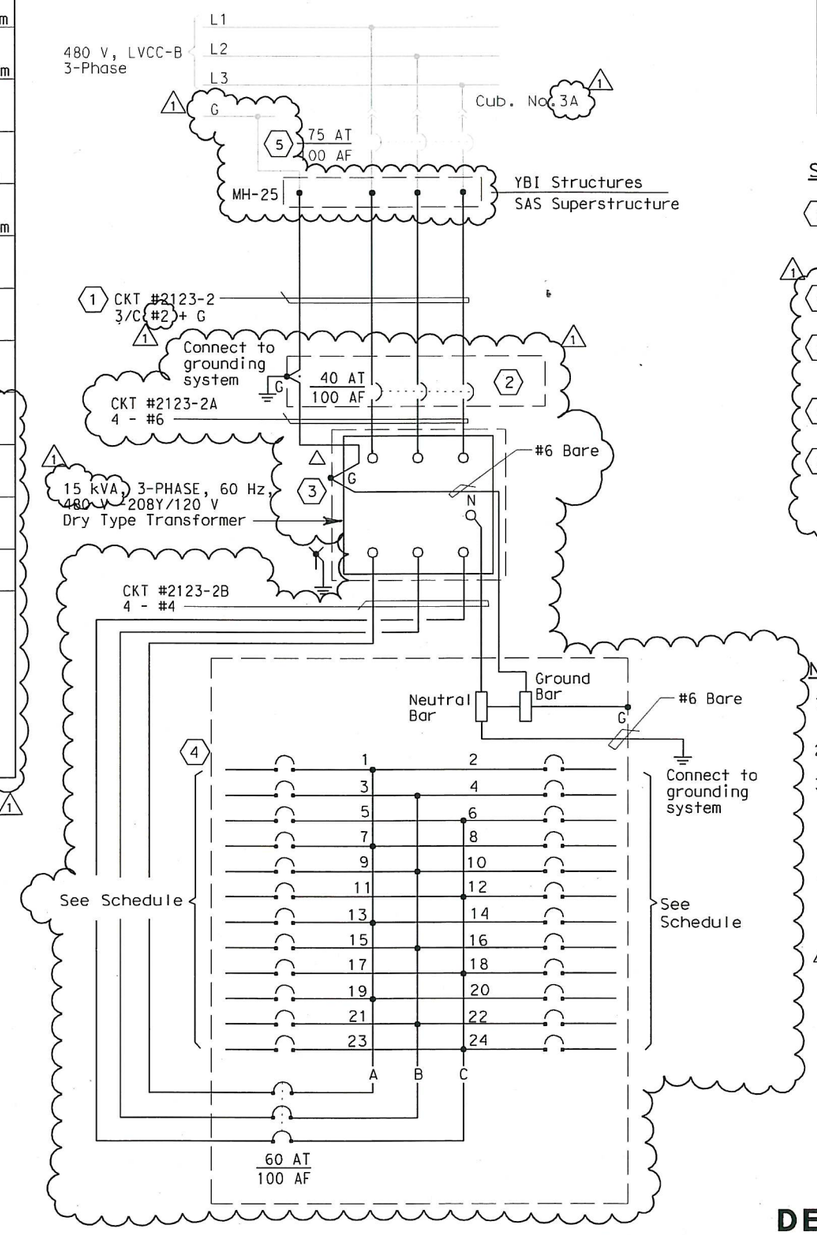

SHEET NOTES:

(1) Contractor shall extend and coil 5 meters of cable in Manhole-25. All cables shall be tagged with circuit number as shown (YBI-1 contract).

(2) Enclosed type circuit breaker in NEMA type 12 enclosure.

(3) Dry type step down transformer with copper winding in NEMA type 12 enclosure.

(4) Panelboard w/ 100A copper bus in NEMA type 12 enclosure.

(5) As-built feeder circuit breaker rating per YBI Substation contract. Feeder conductor size accomplished by YBI-1 contract.

NOTES:

1. Contractor shall provide nameplates and circuit schedules as shown.
2. Deleted. (1)
3. References:
   - For conduit and cable tray schedules, see sheets starting at E-401.
   - For pull box schedule, see sheets E-83 and E-169.
   - For tower diaphragm lighting and receptacle locations, see sheet E-274.
   - For LVCC-B single line diagram, see sheets E-32 through E-35. (1)
   - For equipment location and arrangement, see sheets E-285 and E-285A.

REGISTERED PROFESSIONAL ENGINEER FADI WALIEDDINE No. 11465 Exp. 12/31/2009 ELECTRICAL STATE OF CALIFORNIA

FOR REVISION ONLY (1)

REQUEST FOR INFORMATION NOT ADDRESSED IN THIS CCO REMAIN IN FORCE					
(1)	09/18/09	TOWER UTILITY PANELS	JS TW	RG FW	70
MARK	DATE	DESCRIPTIONS	BY	CH'D	CCO#
REVISIONS					

CONTRACT CHANGE ORDER NO. 70
SHEET 23 OF 45

DETAILS
TOWER AND SUSPENSION CABLE PANEL UP-210-1A SCHEDULE
NO SCALE

E-279

DATE	REVISED BY	DATE	REVISED
10/01	FK	11/01	EDC

CALCULATED/DESIGNED BY FK
CHECKED BY EDC

DESIGN OVERSIGHT BEHZAD GOLEMOHAMMADI

STATE OF CALIFORNIA - DEPARTMENT OF TRANSPORTATION
Caltrans

LAST REVISION 00-00-00
DATE PLOTTED => 12/10/2009
TIME PLOTTED => 3:33:56 PM

FOR REDUCED PLANS ORIGINAL SCALE IS IN MILLIMETERS 0 20 40 60 80

DGN FILE =>t:\13103\ms\pse\SAS Struc\CCO\SAS CC070\2009-12-02 issued for Submittal\04-0120f1_0282R01.dgn
USERNAME =>llorico

CU 04251 EA 0120F1

DIST	COUNTY	ROUTE	KILOMETER POST TOTAL PROJECT	SHEET No	TOTAL SHEETS
04	SF	80	13.2/13.9	283R1	1204

12/19/02
REGISTERED ELECTRICAL ENGINEER DATE

12-6-04
PLANS APPROVAL DATE

REGISTERED PROFESSIONAL ENGINEER JENS ERLINGSSON No. 8249 Exp. 9/30/06 ELECTRICAL STATE OF CALIFORNIA

PB POWER, Inc.
A Parsons Brinckerhoff Company
303 Second St., Suite 700N
San Francisco, CA 94107-1317

The State of California or its officers or agents shall not be responsible for the accuracy or completeness of electronic copies of this plan sheet.

Caltrans now has a web site! To get to the web site, go to http://www.dot.ca.gov

Caltrans Metric

MARK	DATE	DESCRIPTIONS	BY	CH'D	CCO#
1	09/18/09	TOWER UTILITY PANELS	JS TW	RG FW	70

REVISIONS

REQUEST FOR INFORMATION NOT ADDRESSED IN THIS CCO REMAIN IN FORCE.

CONTRACT CHANGE ORDER NO. 70
SHEET 24 OF 45

REGISTERED PROFESSIONAL ENGINEER FADI WALIEDDINE No. 11465 Exp. 12/31/2009 ELECTRICAL STATE OF CALIFORNIA

FOR REVISION ONLY 1

UTILITY PANEL UP-210-1B (CKT #2123-3) Location: PIER 1 TOWER AT SW SHAFT PLATFORM ELEV 89.85 m 1

LOAD DESCRIPTION	LTG	REC	OTH.	CB			CB	LTG	REC	OTH.	LOAD DESCRIPTION
SW Ltg. Tower Diaphragm (15) @ Elev 89.00 - 143.00 m	2070			30/1	1	A 2	20/1		720		Recept. Platform (4) @ Elev 127.00 m 1
SW Ltg. Tower Diaphragm (12) @ Elev 53.00 - 89.00 m	1430		1	20/1	3	B 4	20/1		900		Recept. (5) SW Tower Diaphragm @ Elev 53.00 - 89.00 m
SE Ltg. Elect. Dist. Equip. @ Elev 89.00 m	143			20/1	5	C 6	20/1		900		Recept. (5) SW Tower Diaphragm @ Elev 89.00 - 143.00 m
Platform Ltg. (6) @ Elev 127.00 m	246		1	20/1	7	A 8	20/1				Spare 1
NW Ltg. Tower Diaphragm (12) @ Elev 53.00 - 89.00 m	1430			20/1	9	B 10	20/1		900		Recept. (5) NW Tower Diaphragm @ Elev 53.00 - 89.00 m 1
NW Ltg. Tower Diaphragm (15) @ Elev 89.00 - 143.00 m	2070	1	1	30/1	11	C 12	20/1		900		Recept. (5) NW Tower Diaphragm @ Elev 89.00 - 143.00 m
Platform Ltg. (6) @ Elev 89.85 m	246			20/1	13	A 14	20/1		720		Recept. Platform (4) @ Elev 89.85 m 1
Platform Ltg. (6) @ Elev 139.85 m	246			20/1	15	B 16	20/1		360		Recept. Platform (2) @ Elev 139.85 m
Spare				20/1	17	C 18	20/1				Spare
				20/1	19	A 20	20/1				
				20/1	21	B 22	20/1				
				20/1	23	C 24	20/1				
TOTAL VA	7881								5400		TOTAL VA

LOAD SUMMARY (INCLUDES .90 PF) (VA)
Lighting (At 100%): 7881
Gen Use (1st 10 kVA at 100% Plus 50% of remainder): 5400

BALANCE (kVA)
Phase A - 4.002
Phase B - 5.266
Phase C - 4.013

VOLTAGE: 208/120 V
PHASE/WIRES: 3-Phase, 4-Wire
BUS RATING: 100 A
MAIN: 100 A Frame
MOUNTING: Surface
K.A.I.C.: 10

TOTAL kVA: 13.281 FEEDER ENTRY: BOTTOM RIGHT

1

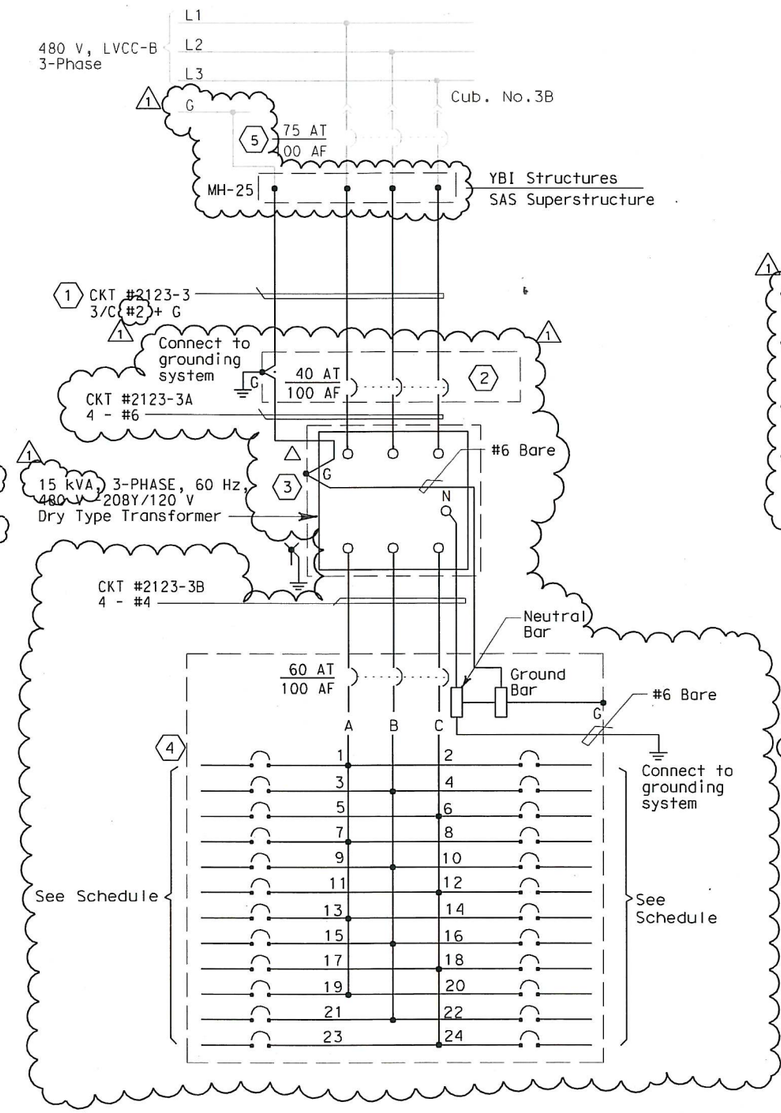

SHEET NOTES:

1. The Contractor shall extend and coil 5 meters of cable in Manhole-25. All cables shall be tagged with circuit number as shown (YBI-1 contract).
2. Enclosed type circuit breaker in NEMA type 12 enclosure.
3. Dry type step down transformer with copper winding in NEMA type 12 enclosure.
4. Panelboard w/ 100A copper bus in NEMA type 12 enclosure.
5. As-built feeder circuit breaker rating per YBI Substation contract. Feeder conductor size accomplished by YBI-1 contract.

NOTES:

1. Contractor shall provide nameplates and circuit schedules as shown.
2. Deleted. 1
3. References:
   - For conduit and cable tray schedules, see sheets starting at E-401.
   - For pull box schedule, see sheets E-83 and E-169.
   - For tower diaphragm lighting and receptacle locations, see sheet E-274.
   - For LVCC-B single line diagram, see sheets E-32 through E-35.
   - For equipment location and arrangement, see sheets E-285 and E-285A. 1

DETAILS
TOWER AND SUSPENSION CABLE PANEL UP-210-1B SCHEDULE
NO SCALE

E-280

REVISED BY	DATE REVISED
EDC	5/31/02

CALCULATED/DESIGNED BY	CHECKED BY
FK	EDC

DATE 10/01 11/01

DESIGN OVERSIGHT
BEHZAD GOLEMOHAMMADI

STATE OF CALIFORNIA - DEPARTMENT OF TRANSPORTATION
Caltrans

FOR REDUCED PLANS ORIGINAL SCALE IS IN MILLIMETERS 0 20 40 60 80

DGN FILE =>t:\13103\ms\pse\SAS Struc\CCO\SAS CC070\2009-12-02 issued for Submittal\04-0120f1_0283R01.dgn
USERNAME =>llorico
CU 04251 EA 0120F1

LAST REVISION 00-00-00
DATE PLOTTED => 12/10/2009
TIME PLOTTED => 3:34:13 PM

REQUEST FOR INFORMATION NOT ADDRESSED IN THIS CCO REMAIN IN FORCE					
2	12/11/09	TOWER UTILITY PANELS	TW	RG FW	70
1	02/19/08	ELECTRICAL MODIFICATIONS	MP EL	RR	42
MARK	DATE	DESCRIPTIONS	BY	CH'D	CCO#
		REVISIONS			

CONTRACT CHANGE ORDER NO. 70
SHEET 25 OF 45

REGISTERED PROFESSIONAL ENGINEER
SEAN COUGHLIN
No. 12227
Exp. 9/30/08
ELECTRICAL
STATE OF CALIFORNIA

REGISTERED ELECTRICAL ENGINEER

1

REGISTERED PROFESSIONAL ENGINEER
FADI WALIEDDINE
No. 11465
Exp. 12/31/2009
ELECTRICAL
STATE OF CALIFORNIA

FOR REVISION ONLY

2

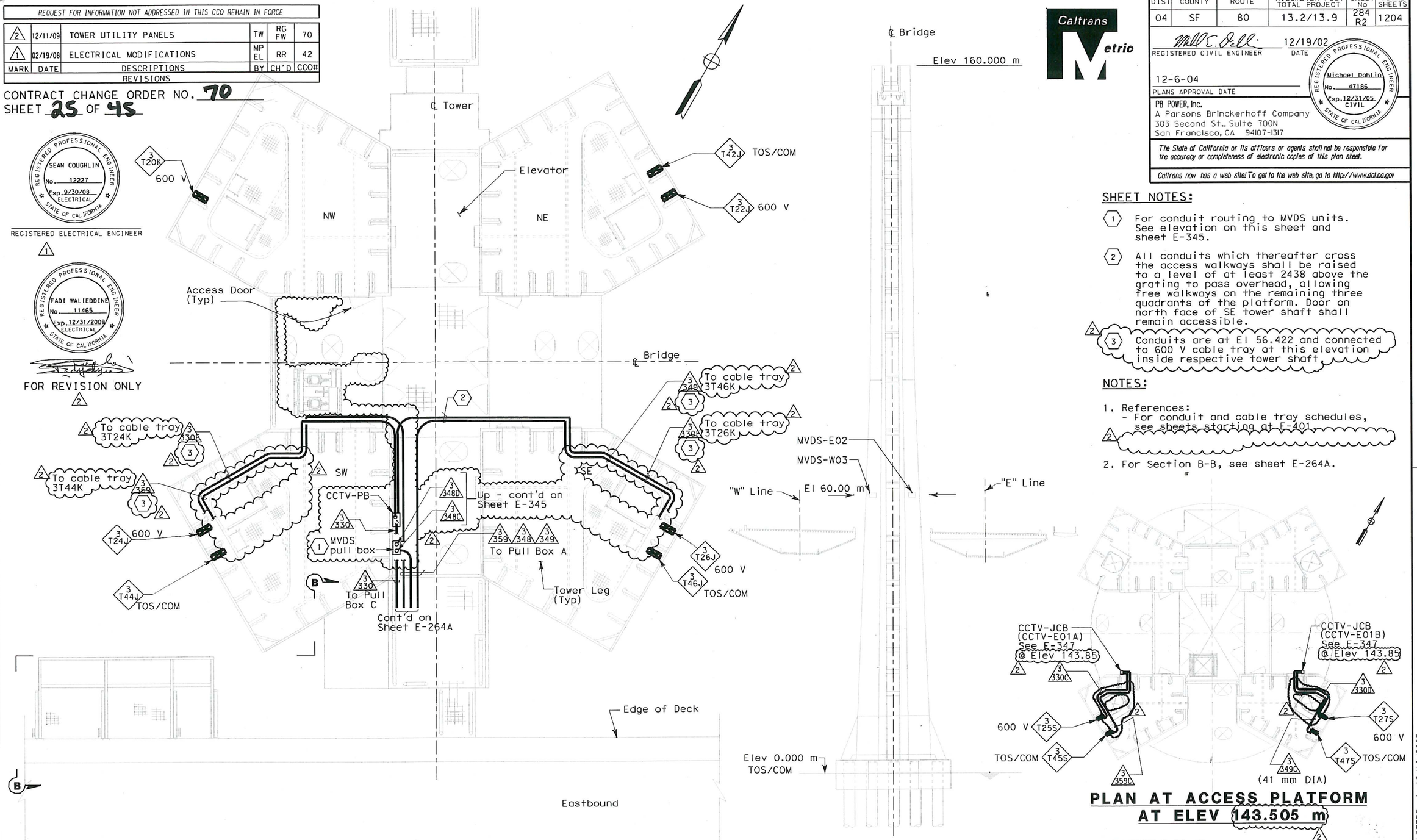

PLAN AT ACCESS PLATFORM AT ELEV 53.85 m

Some conduits and equipment are not shown for clarity. See sheets E-264, E-264B, E-345, and E-366 for more conduit and equipment information.

ELEVATION

PLAN AT ACCESS PLATFORM AT ELEV 143.505 m

DETAILS
TOWER AND SUSPENSION CABLE TRAFFIC OPERATIONS SYSTEM CONDUIT
NO SCALE

THIS PLAN ACCURATE FOR ELECTRICAL WORK ONLY.

ALL DIMENSIONS IN MILLIMETERS UNLESS OTHERWISE SHOWN

DIST	COUNTY	ROUTE	KILOMETER POST TOTAL PROJECT	SHEET No	TOTAL SHEETS
04	SF	80	13.2/13.9	284 R2	1204

REGISTERED CIVIL ENGINEER — DATE 12/19/02

12-6-04
PLANS APPROVAL DATE

REGISTERED PROFESSIONAL ENGINEER
Michael Dahlin
No. 47186
Exp. 12/31/05
CIVIL
STATE OF CALIFORNIA

PB POWER, Inc.
A Parsons Brinckerhoff Company
303 Second St., Suite 700N
San Francisco, CA 94107-1317

The State of California or its officers or agents shall not be responsible for the accuracy or completeness of electronic copies of this plan sheet.

Caltrans now has a web site! To get to the web site, go to http://www.dot.ca.gov

Caltrans Metric

SHEET NOTES:

1. For conduit routing to MVDS units. See elevation on this sheet and sheet E-345.
2. All conduits which thereafter cross the access walkways shall be raised to a level of at least 2438 above the grating to pass overhead, allowing free walkways on the remaining three quadrants of the platform. Door on north face of SE tower shaft shall remain accessible.
3. Conduits are at El 56.422 and connected to 600 V cable tray at this elevation inside respective tower shaft.

NOTES:

1. References:
   - For conduit and cable tray schedules, see sheets starting at E-401.
2. For Section B-B, see sheet E-264A.

CALCULATED/ DESIGNED BY	MD	DATE 11/01	REVISED BY	DATE REVISED
CHECKED BY	PBF	12/01		

DESIGN OVERSIGHT
BEHZAD GOLEMOHAMMADI

STATE OF CALIFORNIA - DEPARTMENT OF TRANSPORTATION
Caltrans

LAST REVISION 00-00-00
DATE PLOTTED => 12/10/2009
TIME PLOTTED => 3:34:45 PM

FOR REDUCED PLANS ORIGINAL SCALE IS IN MILLIMETERS 0 20 40 60 80

DGN FILE =>t:\13103\ms\pse\SAS Struc\CCO\SAS CC070\2009-12-02 issued for Submittal\04-0120f1_0284R02.dgn
USERNAME =>llorico

CU 04251 | EA 0120F1

E-281

DIST	COUNTY	ROUTE	KILOMETER POST TOTAL PROJECT	SHEET No	TOTAL SHEETS
04	SF	80	13.2/13.9	285 R1	1204

REGISTERED ELECTRICAL ENGINEER 12/19/02 DATE

12-6-04
PLANS APPROVAL DATE

REGISTERED PROFESSIONAL ENGINEER JENS ERLINGSSON No. 8249 Exp. 9/30/06 ELECTRICAL STATE OF CALIFORNIA

PB POWER, Inc.
A Parsons Brinckerhoff Company
303 Second St., Suite 700N
San Francisco, CA 94107-1317

The State of California or its officers or agents shall not be responsible for the accuracy or completeness of electronic copies of this plan sheet.

Caltrans now has a web site! To get to the web site, go to http://www.dot.ca.gov

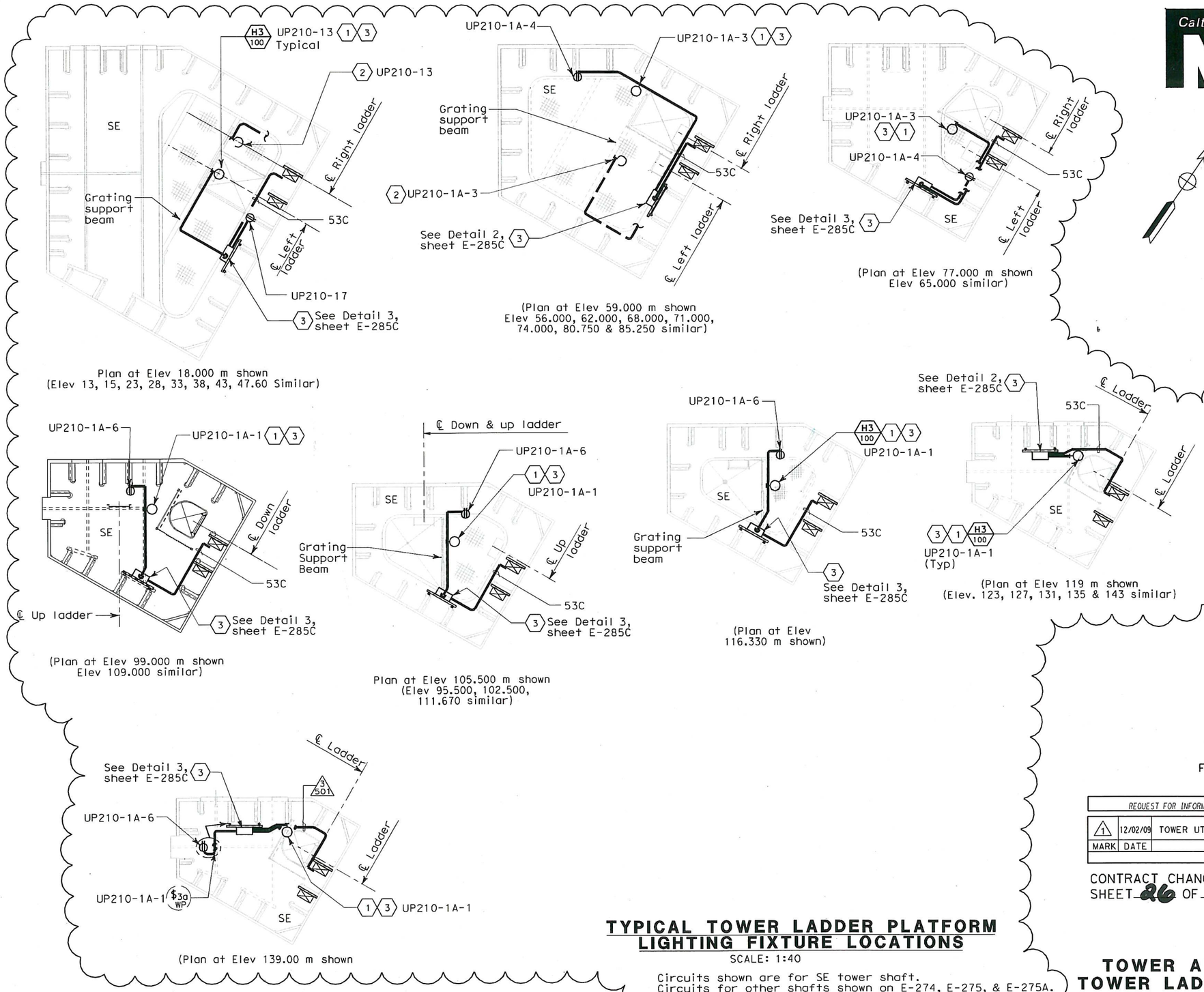

NOTES:

1. References:
   - For elevation of this tower leg, see sheet E-284, E-284A. 1
   - For mounting details refer to sheet E-268.
   - For typical ladder platform lighting details, see sheet E-283. 1
   - All luminaires are type H3/100 unless noted otherwise. See sheets E-267, E-273, & E-283.
   - For lights, receptacles, switches wiring and ckt, see E-274, E-275 and E-275A.

SHEET NOTES:

1. Mounted under ceiling diaphragm. 1
2. Mounted under floor diaphragm.
3. Number and sizes of conduit are field route to lights, receptacles and switches. See E-284 and E-284A for conduit sizes and pull box type per location.

REGISTERED PROFESSIONAL ENGINEER FADI WALIEDDINE No. 11465 Exp. 12/31/2009 ELECTRICAL STATE OF CALIFORNIA

FOR REVISION ONLY 1

REQUEST FOR INFORMATION NOT ADDRESSED IN THIS CCO REMAIN IN FORCE					
1	12/02/09	TOWER UTILITY PANELS	JS TW	RG FW	70
MARK	DATE	DESCRIPTIONS	BY	CH'D	CCO#
REVISIONS					

CONTRACT CHANGE ORDER NO. 70
SHEET 26 OF 45

TYPICAL TOWER LADDER PLATFORM LIGHTING FIXTURE LOCATIONS

SCALE: 1:40

Circuits shown are for SE tower shaft.
Circuits for other shafts shown on E-274, E-275, & E-275A.
Conduits shown on E-284, E-284A & E-284B.

DETAILS
TOWER AND SUSPENSION CABLE TOWER LADDER PLATFORM LIGHTING

SCALE AS NOTED

E-282

THIS PLAN ACCURATE FOR ELECTRICAL WORK ONLY.

ALL DIMENSIONS ARE IN MILLIMETERS UNLESS OTHERWISE SHOWN

FOR REDUCED PLANS ORIGINAL SCALE IS IN MILLIMETERS 0 20 40 60 80

DGN FILE =>t:\13103\ms\pse\SAS Struc\CCO\SAS CC070\2009-12-02 issued for Submittal\04-0120F1_0285R01.dgn
USERNAME =>llorico

CU 04251 | EA 0120F1

REVISED BY	DATE REVISED

CALCULATED/DESIGNED BY	FK	DATE 10/01
CHECKED BY	EDC	11/01

DESIGN OVERSIGHT
BEHZAD GOLEMOHAMMADI

STATE OF CALIFORNIA - DEPARTMENT OF TRANSPORTATION
Caltrans

LAST REVISION 00-00-00
DATE PLOTTED => 12/10/2009
TIME PLOTTED => 3:35:13 PM

DIST	COUNTY	ROUTE	KILOMETER POST TOTAL PROJECT	SHEET No	TOTAL SHEETS
04	SF	80	13.2/13.9	286 R1	1204

REGISTERED ELECTRICAL ENGINEER 12/19/02 DATE

12-6-04
PLANS APPROVAL DATE

REGISTERED PROFESSIONAL ENGINEER JENS ERLINGSSON No. 8249 Exp. 9/30/06 ELECTRICAL STATE OF CALIFORNIA

PB POWER, Inc.
A Parsons Brinckerhoff Company
303 Second St., Suite 700N
San Francisco, CA 94107-1317

The State of California or its officers or agents shall not be responsible for the accuracy or completeness of electronic copies of this plan sheet.

Caltrans now has a web site! To get to the web site, go to http://www.dot.ca.gov

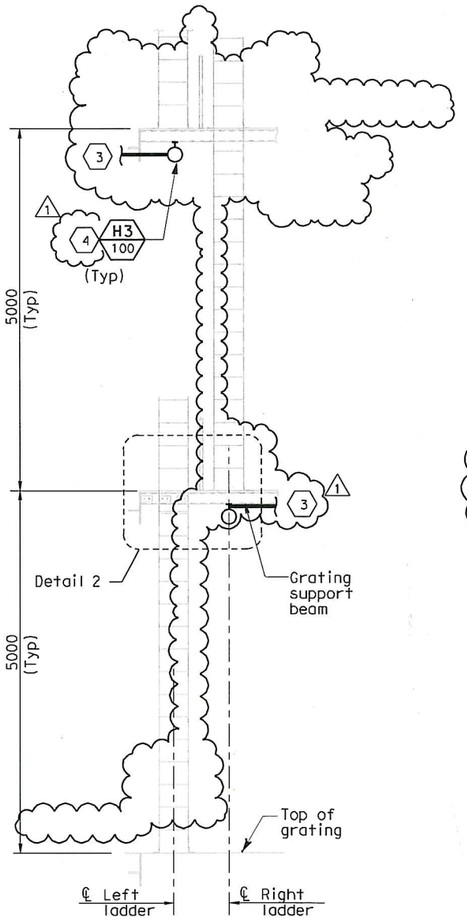

FRONT VIEW

TYPICAL LADDER PLATFORM LIGHTING LAYOUT

SCALE: 1:40

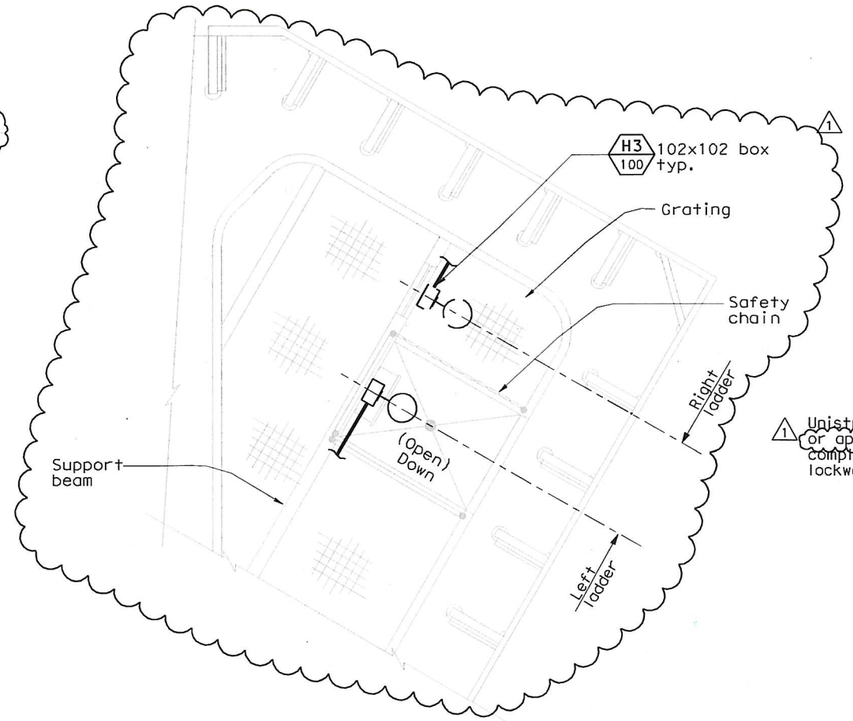

TYPICAL LIGHTING FIXTURE SUPPORT FROM SUPPORT BEAM

Other conduits removed for clarity

SECTION A-A

SCALE: 1:10

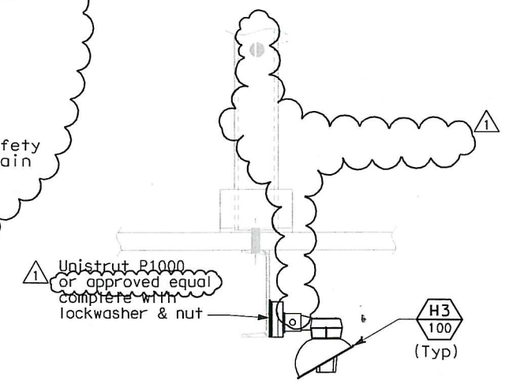

SECTION B-B

SCALE: 1:5

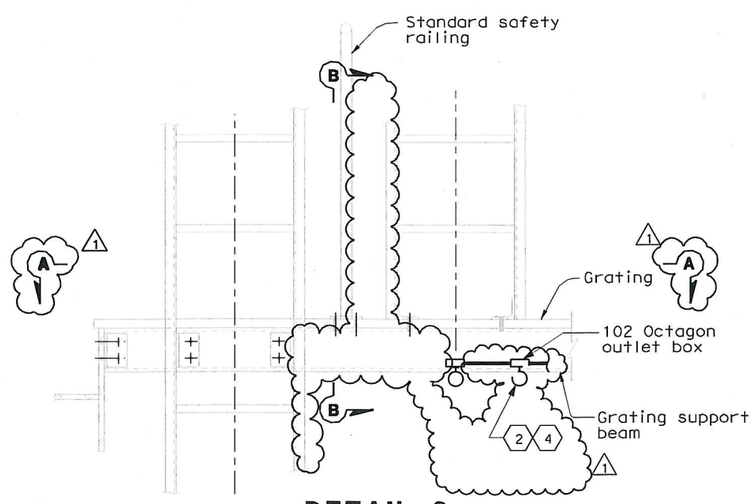

DETAIL 2

SCALE: 1:10

(Typ for El. 53.85 & El. 89.85)

SHEET NOTES:

1. Not used
2. At Elev 53 and 89 provide lights and switches from circuits above and below level. See sheets E-284 & E-284A, for details.
3. To lighting and receptacle junction boxes or switches.
4. For lighting fixture locations and conduit routing see Dwg E282, E264B, E285 and E285B.

NOTES:

1. References:
   - For lighting fixture schedules, see sheet E-273.
   - For light and switch wiring, see sheets E-274, E-275, and E275A.
   - For typical tower ladder platform lighting, see E-284 and E-284A.
   - For typical lighting installation, see sheet E-267.
   - For switches/receptacles mounting see Detail 11, Sheet E-268

REQUEST FOR INFORMATION NOT ADDRESSED IN THIS CCO REMAIN IN FORCE					
1	12/02/09	TOWER UTILITY PANELS	JS	RG FW	70
MARK	DATE	DESCRIPTIONS	BY	CH'D	CCO#
REVISIONS					

CONTRACT CHANGE ORDER NO. 70
SHEET 27 OF 45

REGISTERED PROFESSIONAL ENGINEER FADI WALIEDDINE No. 11465 Exp. 12/31/2009 ELECTRICAL STATE OF CALIFORNIA

FOR REVISION ONLY

DETAILS
TOWER AND SUSPENSION CABLE TOWER LADDER PLATFORM LIGHTING

SCALE AS NOTED

E-283

THIS PLAN ACCURATE FOR ELECTRICAL WORK ONLY.

ALL DIMENSIONS ARE IN MILLIMETERS UNLESS OTHERWISE SHOWN

FOR REDUCED PLANS ORIGINAL SCALE IS IN MILLIMETERS 0 20 40 60 80

DGN FILE =>t:\13103\ms\pse\SAS Struc\CCO\SAS CCO70\2009-12-02 issued for Submittal\04-0120f1_0286R01.dgn
USERNAME =>llorico

CU 04251 EA 0120F1

DATE PLOTTED => 12/10/2009
TIME PLOTTED => 4:00:40 PM

LAST REVISION 00-00-00

STATE OF CALIFORNIA - DEPARTMENT OF TRANSPORTATION
Caltrans

DESIGN OVERSIGHT: BEHZAD GOLEMOHAMMADI

CALCULATED/DESIGNED BY	FK	DATE 10/01	REVISED BY
CHECKED BY	EDC	11/01	DATE REVISED

DIST	COUNTY	ROUTE	KILOMETER POST TOTAL PROJECT	SHEET No	TOTAL SHEETS
04	SF	80	13.2/13.9	287 R1	1204

Jens Erlingsson 12/19/02
REGISTERED ELECTRICAL ENGINEER DATE

12-6-04
PLANS APPROVAL DATE

REGISTERED PROFESSIONAL ENGINEER JENS ERLINGSSON No. 8249 Exp. 9/30/06 ELECTRICAL STATE OF CALIFORNIA

PB POWER, Inc.
A Parsons Brinckerhoff Company
303 Second St., Suite 700N
San Francisco, CA 94107-1317

The State of California or its officers or agents shall not be responsible for the accuracy or completeness of electronic copies of this plan sheet.

Caltrans now has a web site! To get to the web site, go to http://www.dot.ca.gov

Caltrans Metric

REGISTERED PROFESSIONAL ENGINEER FADI WALIEDDINE No. 11465 Exp. 12/31/2009 ELECTRICAL STATE OF CALIFORNIA

FOR REVISION ONLY (1)

NOTES:

1. References:
   - For lighting schedules, see sheet E-273.
   - For circuit and conduit/cable tray schedules, see sheets starting at E-401.
   - For light and switch wiring, see sheets E-274, E-275 and E-275A. (1)
   - For tower ladder platform lighting, Refer to sheets E-282 & E-264B. (1)
   - For typical ladder platform lighting mounting detail, see sheet E-283.
   - for pull box schedule, see sheet E-83.

SHEET NOTES:

(1) Cable tray ID shown is for SE tower shaft. See sheet E-270B for NE, NW & SW cable tray ID's.
(2) For typical switch and receptacle mounting details, see sheet E-268, Detail 11.
(3) For lighting, pull box, switches and receptacles plan, see sheets E-264B, E-282, E-285, E-285B and E-286
(4) Circuit ID shown is for SE tower shaft, See sheets E-274, E-275 and E-275A for NE, NW and SW circuit ID's.
(5) For conduit sizes, see sheets E-264B, E-282.

REQUEST FOR INFORMATION NOT ADDRESSED IN THIS CCO REMAIN IN FORCE					
1	09/18/09	TOWER UTILITY PANELS	JS TW	RG FW	70
MARK	DATE	DESCRIPTIONS	BY	CH'D	CCO#
REVISIONS					

CONTRACT CHANGE ORDER NO. 70
SHEET 28 OF 45

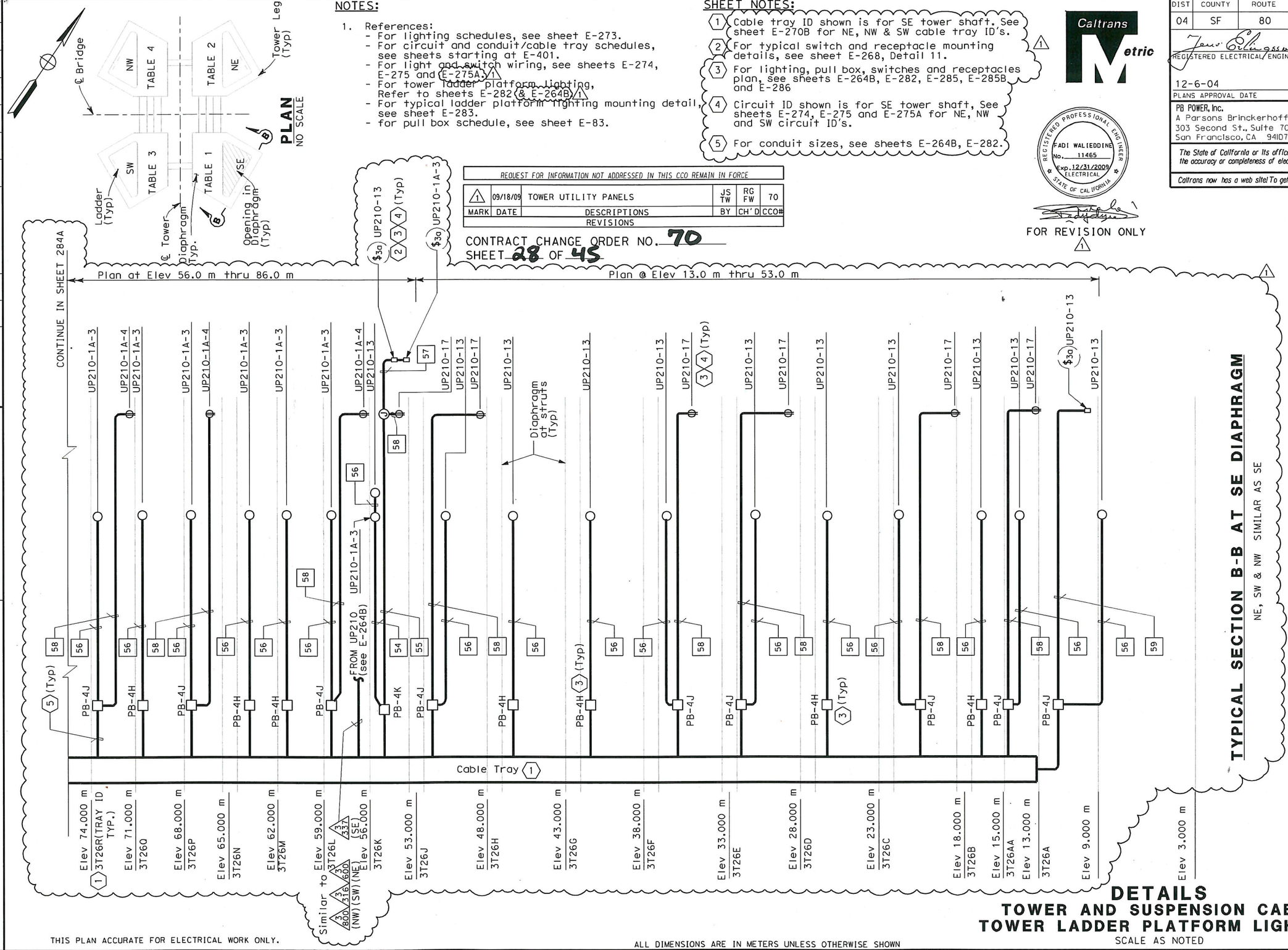

TYPICAL SECTION B-B AT SE DIAPHRAGM

NE, SW & NW SIMILAR AS SE

DETAILS
TOWER AND SUSPENSION CABLE
TOWER LADDER PLATFORM LIGHTING

SCALE AS NOTED

E-284

THIS PLAN ACCURATE FOR ELECTRICAL WORK ONLY.

ALL DIMENSIONS ARE IN METERS UNLESS OTHERWISE SHOWN

FOR REDUCED PLANS ORIGINAL SCALE IS IN MILLIMETERS 0 20 40 60 80

DGN FILE => t:\13103\ms\pse\SAS Struc\CCO\SAS CCO70\2009-12-02 issued for Submittal\04-0120F1_0287R01.dgn
USERNAME => llorico

CU 04251 EA 0120F1

LAST REVISION 00-00-00 DATE PLOTTED => 12/10/2009 TIME PLOTTED => 4:00:58 PM

STATE OF CALIFORNIA - DEPARTMENT OF TRANSPORTATION
Caltrans

DESIGN OVERSIGHT: BEHZAD GOLEMOHAMMADI

CALCULATED/DESIGNED BY FK DATE 10/01 REVISED BY
CHECKED BY EDC 11/01 DATE REVISED

DIST	COUNTY	ROUTE	KILOMETER POST TOTAL PROJECT	SHEET No	TOTAL SHEETS
04	SF	80	13.2/13.9	287 S1	1204

REGISTERED ELECTRICAL ENGINEER DATE

PLANS APPROVAL DATE

REGISTERED PROFESSIONAL ENGINEER FADI WALIEDDINE No. 11465 Exp. 12/31/2009 ELECTRICAL STATE OF CALIFORNIA

PB AMERICAS, Inc.
A Parsons Brinckerhoff Company
303 Second St., Suite 700N
San Francisco, CA 94107-1317

The State of California or its officers or agents shall not be responsible for the accuracy or completeness of electronic copies of this plan sheet.

Caltrans now has a web site! To get to the web site, go to http://www.dot.ca.gov

Caltrans Metric

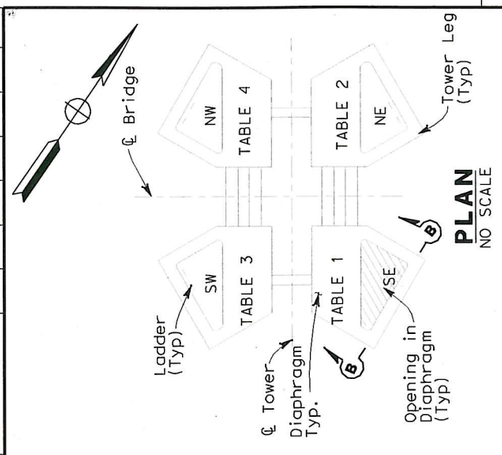

PLAN
NO SCALE

NOTES:

1. References:
   - For lighting schedules, see sheet E-273.
   - For circuit and conduit/cable tray schedules, see sheets starting at E-401.
   - For light and switch wiring, see sheets E-274, E-275 and E-275A.
   - For tower ladder platform lighting, Refer to sheets E-282, E-285 & E-285B.
   - For typical ladder platform lighting mounting detail, see sheet E-283.
   - For pull box schedule, see Sheet E-83

REQUEST FOR INFORMATION NOT ADDRESSED IN THIS CCO REMAIN IN FORCE

MARK	DATE	DESCRIPTIONS	BY	CH'D	CCO#
0	09/18/09	TOWER UTILITY PANELS	JS TW	RG FW	70

REVISIONS

CONTRACT CHANGE ORDER NO. 70
SHEET 29 OF 45

SHEET NOTES:

1. For conduit size and ID's, see sheet E-285B.
2. Cable tray ID shown is for SE tower shaft. See sheet E-270B for NE,NW, & SW shaft cable tray ID's.
3. Only in SE and SW shafts.
4. Through penetration @ El 144.54 to platform lighting and receptacles @ El. 139.85 SW shaft only, see E-286.
5. For typical switch and receptacle mounting details, see sheet E-268, Detail 11.
6. For lighting, pull box, switches and receptacles plan, see sheets E-264B, E-282, E-285, E-285B and E-286.
7. Circuit ID shown is for SE tower shaft. See sheets E-274, E-275 and E-275A for NE, NW and SW circuit ID's.
8. For conduit sizes, see sheets E-282, E-285B & E-286.

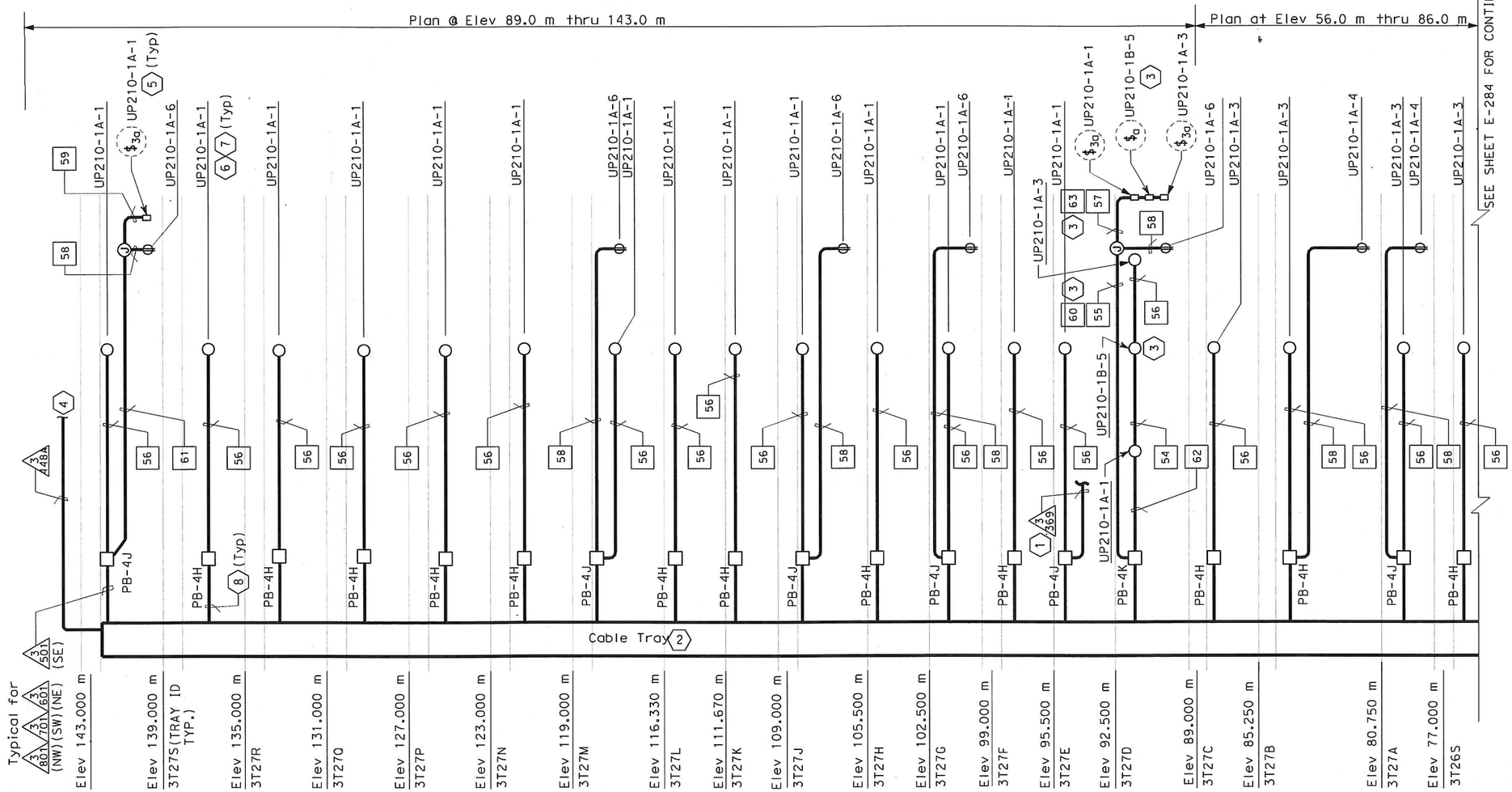

TYPICAL SECTION B-B AT SE DIAPHRAGM
NE, SW, NW, SIMILAR AS SE

DETAILS
TOWER AND SUSPENSION CABLE
TOWER LADDER PLATFORM LIGHTING
SCALE: AS NOTED

E-284A

THIS PLAN ACCURATE FOR ELECTRICAL WORK ONLY.

ALL DIMENSIONS ARE IN METERS UNLESS OTHERWISE SHOWN

FOR REDUCED PLANS ORIGINAL SCALE IS IN MILLIMETERS 0 20 40 60 80

DGN FILE =>t:\13103\ms\pse\SAS Struc\CCO\SAS CC070\2009-12-02 issued for Submittal\04-0120f1_0287S01.dgn
USERNAME =>llorico

CU 04251 EA 0120F1

LAST REVISION 00-00-00 DATE PLOTTED => 12/10/2009 TIME PLOTTED => 4:01:13 PM

STATE OF CALIFORNIA - DEPARTMENT OF TRANSPORTATION
Caltrans

DESIGN OVERSIGHT
BEHZAD GOLEMOHAMMADI

CALCULATED/DESIGNED BY FK DATE 10/01 REVISED BY
CHECKED BY EDC 11/01 DATE REVISED

REQUEST FOR INFORMATION NOT ADDRESSED IN THIS CCO REMAIN IN FORCE					
2	12/11/09	TOWER UTILITY PANELS	JS TW	RG FW	70
1	02/19/08	ELECTRICAL MODIFICATIONS	MP EL	RR	42
MARK	DATE	DESCRIPTIONS	BY	CH'D	CCO#
REVISIONS					

CONTRACT CHANGE ORDER NO. 70
SHEET 30 OF 45

FOR REVISION ONLY 1

FOR REVISION ONLY 2

DIST	COUNTY	ROUTE	KILOMETER POST TOTAL PROJECT	SHEET No	TOTAL SHEETS
04	SF	80	13.2/13.9	288 R2	1204

REGISTERED ELECTRICAL ENGINEER 12/19/02 DATE

12-6-04
PLANS APPROVAL DATE

PB POWER, Inc.
A Parsons Brinckerhoff Company
303 Second St., Suite 700N
San Francisco, CA 94107-1317

The State of California or its officers or agents shall not be responsible for the accuracy or completeness of electronic copies of this plan sheet.

Caltrans now has a web site! To get to the web site, go to http://www.dot.ca.gov

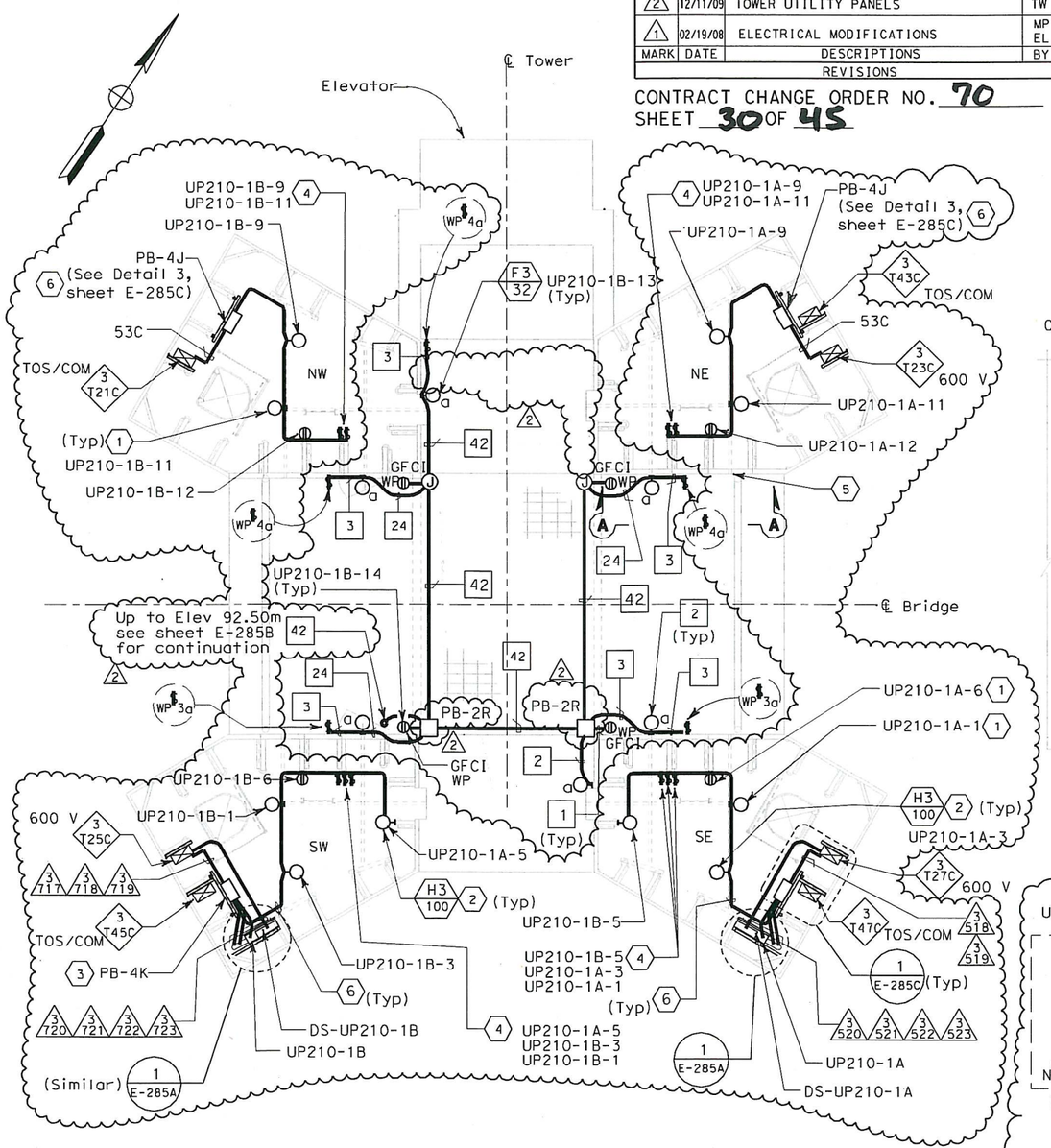

PLAN AT ELEVATION 89.85 m

SCALE: 1:40

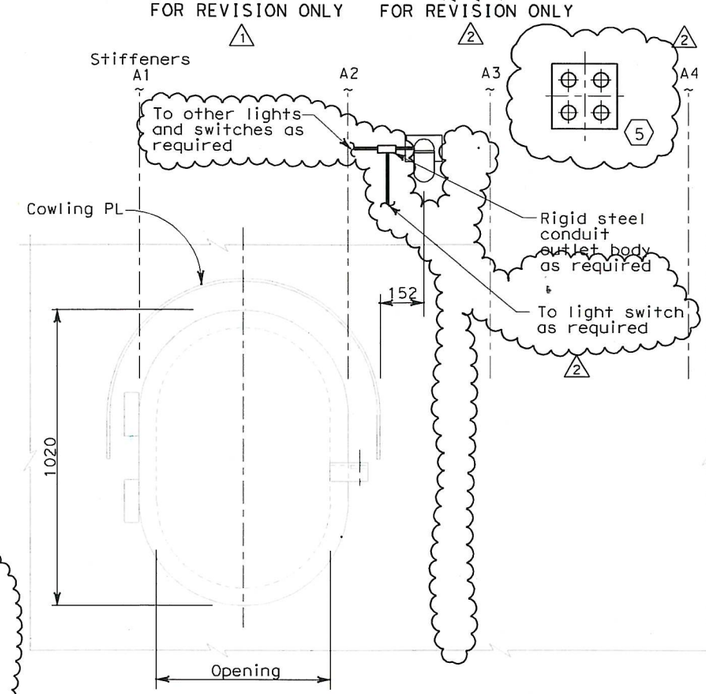

SECTION A-A
ACCESS OPENING DOOR

NO SCALE

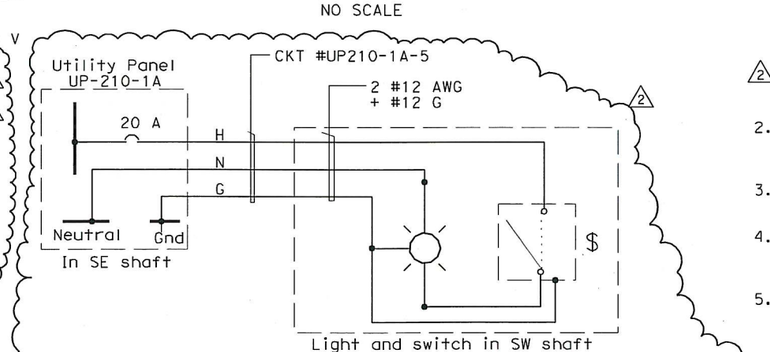

120 V ELECTRICAL EQUIPMENT TASK LIGHTING WIRING DIAGRAM

(Shown for circuit #UP210-1A-5 only, light in SE shaft is similar, but fed from UP-210-1B-5 in the SW shaft)

SHEET NOTES:

1. For tower shaft ladder and platform lighting and power layout, see section B-B on sheet E-284 & E-284A.
2. Light shown mounted under ceiling.
3. For shaft lighting and receptacle distribution box details, see Detail 1, Sheet E-285C.
4. Multiple switches at certain elevations. See sheets E-284 and E-284A and Detail 8 sheet E-268
5. See sheet E-285B for penetration doubler plate schedule and details.
6. Numbers and sizes of conduits are field route to lights, receptacles and switches. See sheets E-284 and E-284A for conduit information.

NOTES:

1. References:
   - For typical conduit installation details, see sheet E-268.
   - For utility panel UP-210-1A and UP-210-1B panel schedules, see sheets E-279 and E-280.
   - For types of pull boxes, splice boxes and enclosures, see sheets E-83 and E-169.
   - For conduit and cable tray schedules, see sheets starting at E-401.
   - For lighting installation details, see sheet E-267.
   - For lighting fixture schedule, see sheet E-273.
2. All conduits and fittings routed exposed at grating shall be rigid galvanized steel, PVC coated.
3. Fixture mounting height elevation shall be 2.125 m above floor/platform elevation UNO.
4. Electrical conduits shall enter the tower shafts between stiffeners A3 and A4 only. For conduit entry details, see Structural Utility drawings.
5. For other related work not shown on this sheet, see Electrical Special Provisions.

DETAILS
TOWER AND SUSPENSION CABLE TOWER POWER AND LIGHTING

SCALE: AS NOTED

E-285

DATE	REVISED BY	DATE	REVISED BY
10/01	FK	11/01	EDC

CALCULATED/DESIGNED BY
CHECKED BY

DESIGN OVERSIGHT
BEHZAD GOLEMOHAMMADI

STATE OF CALIFORNIA - DEPARTMENT OF TRANSPORTATION
Caltrans

THIS PLAN ACCURATE FOR ELECTRICAL WORK ONLY.

ALL DIMENSIONS ARE IN MILLIMETERS UNLESS OTHERWISE SHOWN

FOR REDUCED PLANS ORIGINAL SCALE IS IN MILLIMETERS 0 20 40 60 80

DGN FILE =>t:\13103\ms\pse\SAS Struc\CCO\SAS CC070\2009-12-02 issued for Submittal\04-0120f1_0288R02.dgn
USERNAME =>llorico

CU 04251 EA 0120F1

LAST REVISION 00-00-00
DATE PLOTTED => 12/10/2009
TIME PLOTTED => 4:01:28 PM

DIST	COUNTY	ROUTE	KILOMETER POST TOTAL PROJECT	SHEET No	TOTAL SHEETS
04	SF	80	13.2/13.9	288 S1	1204

REGISTERED ELECTRICAL ENGINEER DATE

PLANS APPROVAL DATE

REGISTERED PROFESSIONAL ENGINEER FADI WALIEDDINE No. 11465 Exp. 12/31/2009 ELECTRICAL STATE OF CALIFORNIA

PB AMERICAS, Inc.
A Parsons Brinckerhoff Company
303 Second St., Suite 700N
San Francisco, CA 94107-1317

The State of California or its officers or agents shall not be responsible for the accuracy or completeness of electronic copies of this plan sheet.

Caltrans now has a web site! To get to the web site, go to http://www.dot.ca.gov

Caltrans Metric

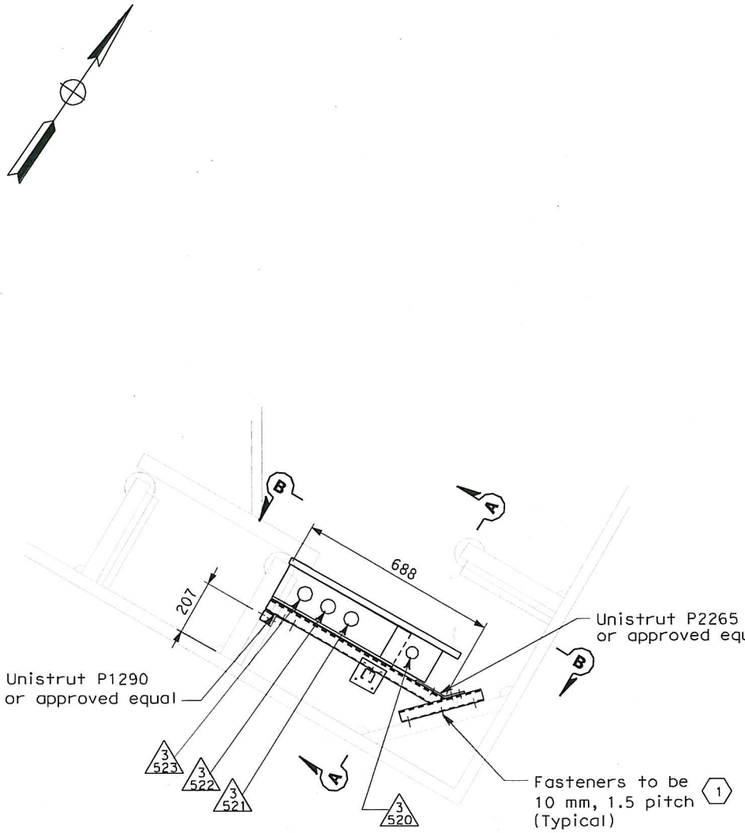

DETAIL 1 AT EL. 89.85 m

1 / E-285

SCALE: 1:10

SE shown, SW typical but opposite hand.

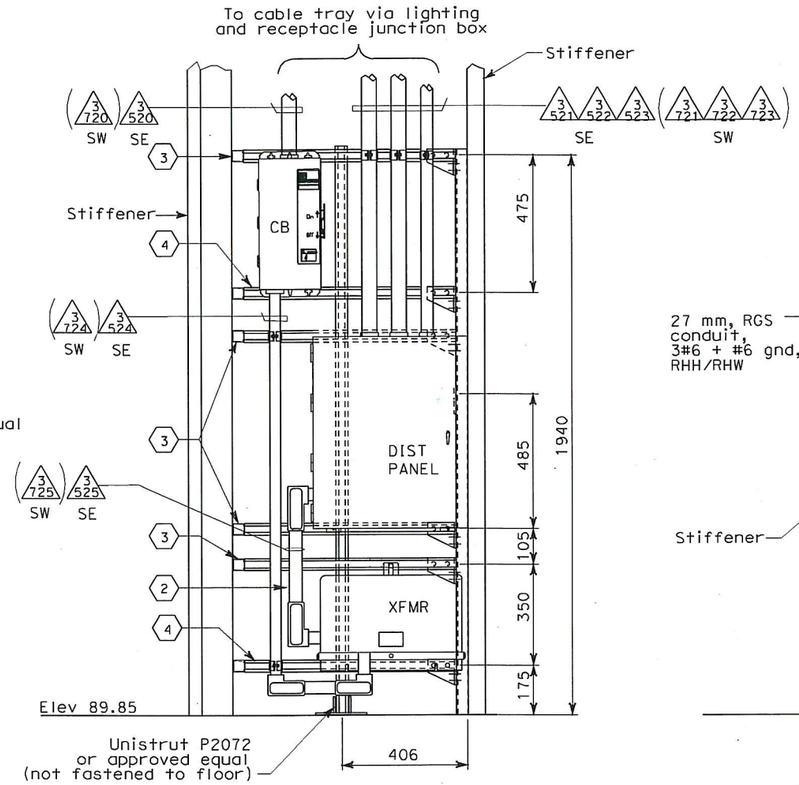

SECTION B-B ELEVATION

NO SCALE

Equipment inside southeast quadrant (UP-210-1A) as shown.
Equipment inside southwest quadrant (UP-210-1B) opposite hand

Dimensions shown are approximate only.
Contractor to adjust to facilitate installation

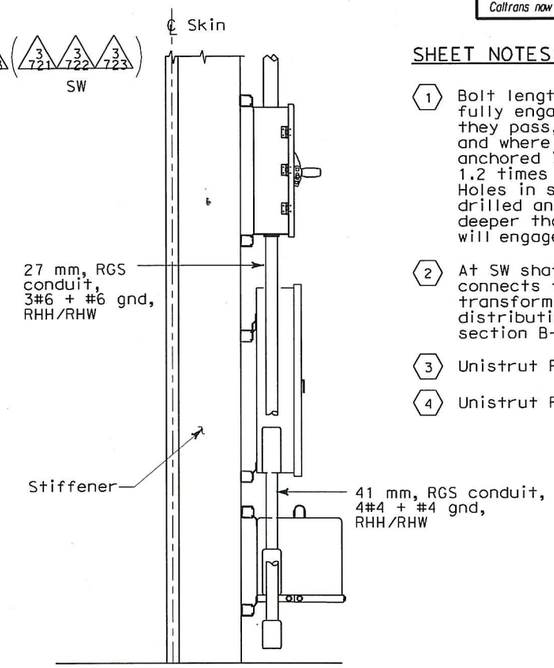

SECTION A-A SIDE VIEW

NO SCALE

Supports and some conduits are not shown for clarity

SHEET NOTES:

1. Bolt lengths to be long enough to fully engage all materials through which they pass, including all washers and nuts, and where attaching to structural steel be anchored in threads to a depth at least 1.2 times the bolt diameter. Holes in structural members shall be drilled and bottom tapped to 5 mm minimum deeper than the depth to which the bolt will engage the steel.
2. At SW shaft, output from transformer connects from lower right side of transformer to top right side of distribution panel, facing front as in section B-B.
3. Unistrut P1000 or approved equal.
4. Unistrut P1000 H3 or approved equal.

REQUEST FOR INFORMATION NOT ADDRESSED IN THIS CCO REMAIN IN FORCE

MARK	DATE	DESCRIPTIONS	BY	CH'D	CCO#
0	12/02/09	TOWER UTILITY PANELS	JS	RG FW	70

REVISIONS

CONTRACT CHANGE ORDER NO. 70
SHEET 31 OF 45

DETAILS
TOWER AND SUSPENSION CABLE TOWER POWER AND LIGHTING

SCALE: AS NOTED

E-285A

DATE	REVISED BY	DATE	REVISED
CALCULATED/DESIGNED BY	FK	DATE 10/01	
CHECKED BY	EDC	11/01	

DESIGN OVERSIGHT
BEHZAD GOLEMOHAMMADI

STATE OF CALIFORNIA - DEPARTMENT OF TRANSPORTATION
Caltrans

THIS PLAN ACCURATE FOR ELECTRICAL WORK ONLY.

ALL DIMENSIONS ARE IN MILLIMETERS UNLESS OTHERWISE SHOWN

FOR REDUCED PLANS ORIGINAL SCALE IS IN MILLIMETERS 0 20 40 60 80

DGN FILE =>t:\13103\ms\pse\SAS Struc\CCO\SAS CC070\2009-12-02 issued for Submittal\04-0120f1_0288S01.dgn
USERNAME =>llorico

CU 04251 | EA 0120F1

LAST REVISION 00-00-00 | DATE PLOTTED => 12/10/2009 TIME PLOTTED => 4:03:24 PM

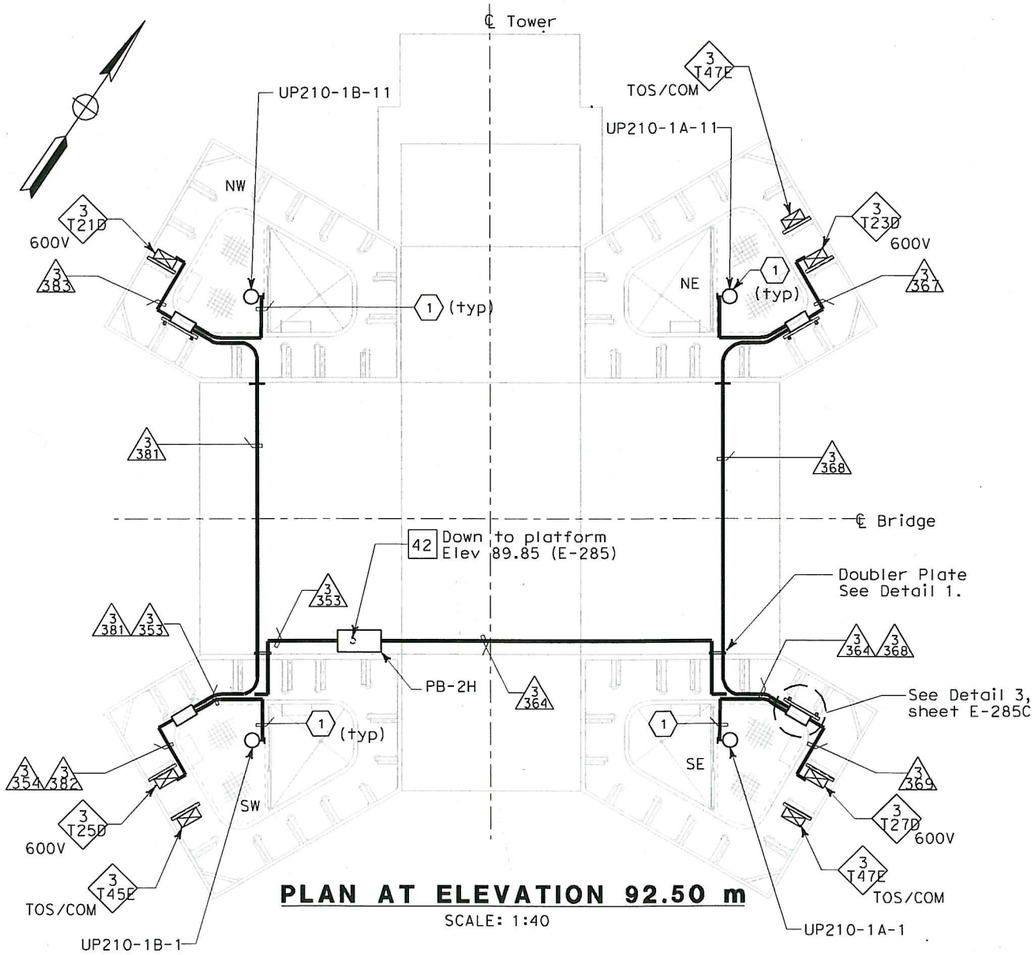

PLAN AT ELEVATION 92.50 m

SCALE: 1:40

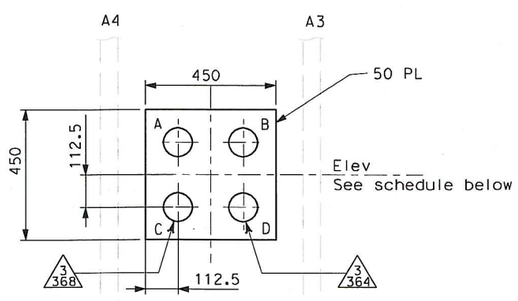

DETAIL 1

TYPICAL DOUBLER PLATE DETAIL

NO SCALE

SE Elev shown, stiffener location shown as viewed from outside shaft, similar for NW shaft & opposite hand for SW & NE shafts

SHEET NOTE:

(1) Numbers and sizes of conduits are field route to lights, receptacles and switches. See sheets E-284 and E-284A for conduit information.

DIST	COUNTY	ROUTE	KILOMETER POST TOTAL PROJECT	SHEET No	TOTAL SHEETS
04	SF	80	13.2/13.9	288 S2	1204

REGISTERED ELECTRICAL ENGINEER DATE

PLANS APPROVAL DATE

REGISTERED PROFESSIONAL ENGINEER FADI WALI EDDINE No. 11465 Exp. 12/31/2009 ELECTRICAL STATE OF CALIFORNIA

PB AMERICAS, Inc.
A Parsons Brinckerhoff Company
303 Second St., Suite 700N
San Francisco, CA 94107-1317

The State of California or its officers or agents shall not be responsible for the accuracy or completeness of electronic copies of this plan sheet.

Caltrans now has a web site! To get to the web site, go to http://www.dot.ca.gov

TOWER SHAFT SKIN PENETRATION DOUBLER PLATE SCHEDULE

Shaft	Elev (m)	Hole Size (mm) A	B	C	D
NW (W)	11.975	100_S	100_S	51	100_S
NW (W) *	16.625	100_S	100_S	100_S	100_S
NW (W)	56.632	100_S	76	100_S	100
NW (W)	92.860	100_S	100_S	100_S	100
NW (W)	129.500	100_S	100_S	100_S	100_S
NW (W)	144.540	100_S	100_S	100_S	100
NE (N)	7.000	100_S	100	100_S	51
NE (N)	11.975	100_S	64	100_S	100_S
NE (N)	13.500	64	100_S	64	78
NE (N)	16.065	100_S	100_S	100_S	100_S
NE (N)	16.625	51	51	100	100
NE (N)	56.422	100_S	76	100_S	100_S
NE (N)	56.977	64	100	76	51
NE (N)	57.622	100	100	51	64
NE (N)	92.860	100_S	100_S	100_S	100
NE (N)	129.500	100_S	100_S	100_S	100_S
NE (N)	144.540	100_S	100_S	100	100_S
SE (E)	11.975	100_S	64	64	100
SE (E)	16.625	100_S	100_S	100_S	100_S
SE (E)	56.422	76	76	64	100
SE (E)	56.972	100_S	100_S	100	64
SE (E)	57.622	64	100_S	64	100_S
SE (E)	92.860	100_S	100_S	100	100
SE (E)	93.400	100_S	64	100_S	64
SE (E)	129.500	100_S	100_S	100_S	100_S
SE (E) *	144.540	64	100_S	64	100_S
SE (E)	144.540	100	100_S	64	76
SW (S)	7.000	100_S	78_S	100_S	100_S
SW (S)	11.975	100_S	100_S	100_S	64
SW (S)	13.500	100_S	78	100_S	100_S
SW (S)	16.625	100_S	51	100_S	100_S
SW (S)	56.542	100	76	100	100
SW (S)	57.082	100	76	51	100_S
SW (S)	57.622	100_S	100_S	100_S	100_S
SW (S)	92.860	100	100_S	100	100_S
SW (S)	93.400	100_S	100_S	100_S	100_S
SW (S)	129.500	100_S	100_S	100_S	100_S
SW (S) *	144.540	100_S	100_S	100_S	100_S
SW (S)	144.540	100_S	100	76	76

Note: 100_S represents a spare penetration.

* Doubler plates are all between stiffeners A3 & A4, except one plate in each of SE & SW shafts at elevation 144.540, which is between A1 & A2, shown with asterisk in table.

MARK	DATE	DESCRIPTIONS	BY	CH'D	CCO#
0	12/11/09	TOWER UTILITY PANELS	JS TW	RG FW	70

REQUEST FOR INFORMATION NOT ADDRESSED IN THIS CCO REMAIN IN FORCE

REVISIONS

CONTRACT CHANGE ORDER NO. 70

SHEET 32 OF 45

DETAILS
TOWER AND SUSPENSION CABLE
TOWER POWER AND LIGHTING

SCALE: AS NOTED

E-285B

THIS PLAN ACCURATE FOR ELECTRICAL WORK ONLY.

ALL DIMENSIONS ARE IN MILLIMETERS UNLESS OTHERWISE SHOWN.

FOR REDUCED PLANS ORIGINAL SCALE IS IN MILLIMETERS 0 20 40 60 80

DGN FILE =>T:\13103\MS\pse\SAS Struc\CCO\SAS CC070\2009-12-02 issued for Submittal\04-0120f1_0288S02.dgn
USERNAME =>liorico

CU 04251 | EA 0120F1

DATE PLOTTED => 12/15/2009
TIME PLOTTED => 1:01:10 PM

LAST REVISION 00-00-00

STATE OF CALIFORNIA - DEPARTMENT OF TRANSPORTATION

DESIGN OVERSIGHT: BEHZAD GOLEMOHAMMADI

CALCULATED/DESIGNED BY | CHECKED BY | FK | EDC | DATE 10/01 | 11/01 | REVISED BY | DATE REVISED

DIST	COUNTY	ROUTE	KILOMETER POST TOTAL PROJECT	SHEET No	TOTAL SHEETS
04	SF	80	13.2/13.9	288 S3	1204

REGISTERED ELECTRICAL ENGINEER DATE

REGISTERED PROFESSIONAL ENGINEER FADI WALIEDDINE No. 11465 Exp. 12/31/2009 ELECTRICAL STATE OF CALIFORNIA

PLANS APPROVAL DATE

PB AMERICAS, Inc.
A Parsons Brinckerhoff Company
303 Second St., Suite 700N
San Francisco, CA 94107-1317

The State of California or its officers or agents shall not be responsible for the accuracy or completeness of electronic copies of this plan sheet.

Caltrans now has a web site! To get to the web site, go to http://www.dot.ca.gov

Caltrans Metric

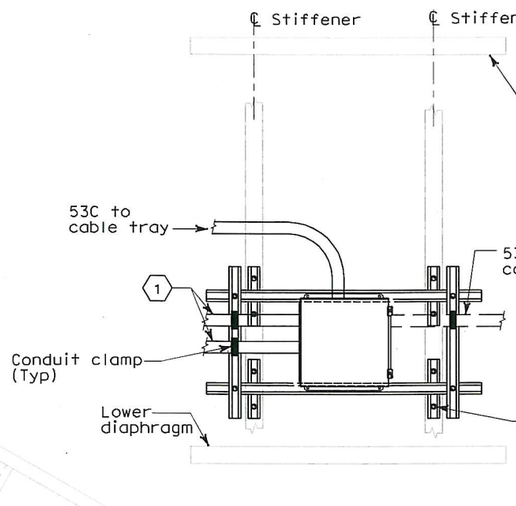

DETAIL 2
Shown for PB-4H

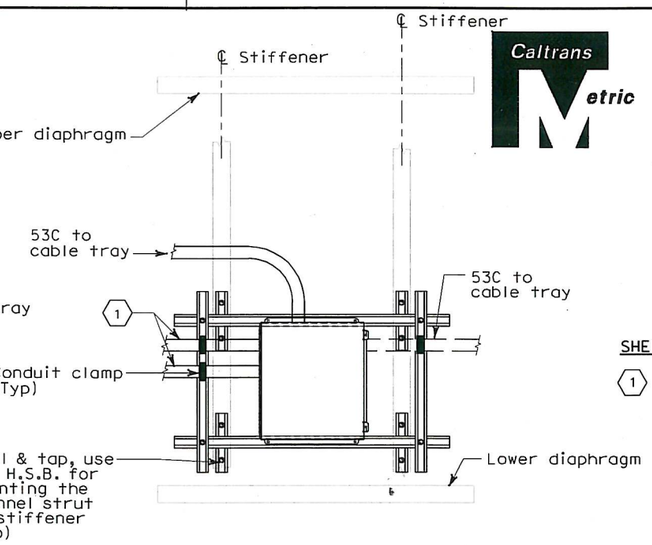

DETAIL 3
Shown for PB-4J

SHEET NOTES:

(1) Number and sizes of conduit are field route to lights, receptacles and switches. See E-282, E-284 and E-284A for conduit sizes and pull box type per location.

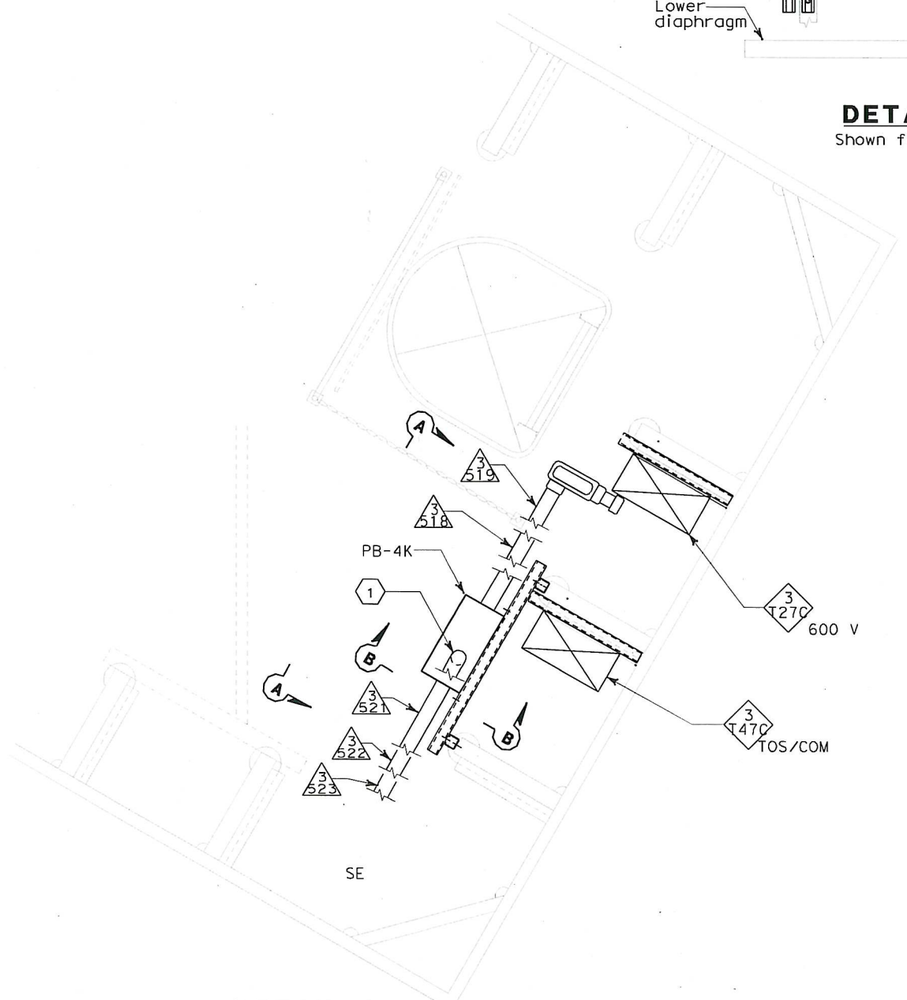

DETAIL 1
Plan at elevation 89.85. Shown for PB-4K
(Some conduits are not shown for clarity)

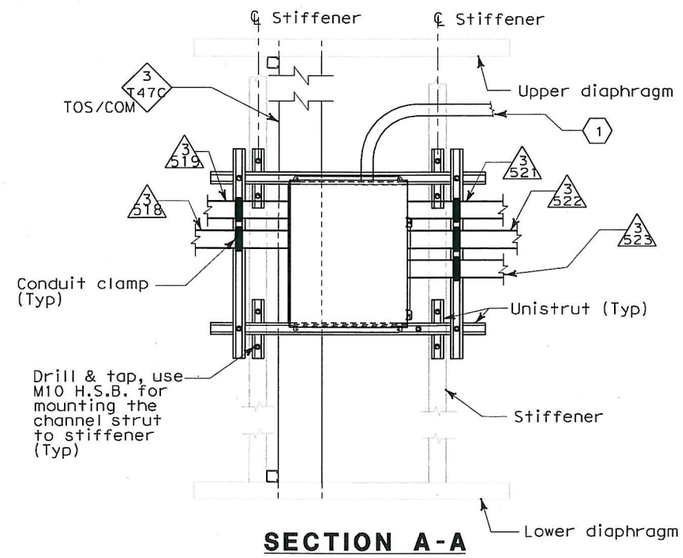

SECTION A-A
Shown for PB-4K

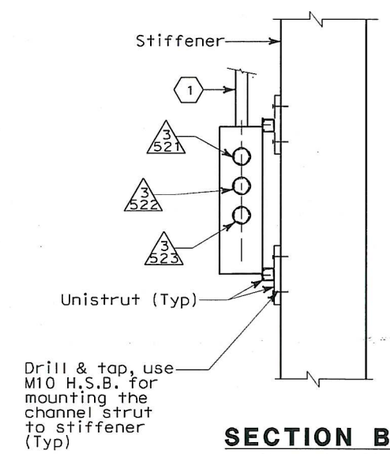

SECTION B-B
Shown for PB-4K

REQUEST FOR INFORMATION NOT ADDRESSED IN THIS CCO REMAIN IN FORCE					
0	12/11/09	TOWER UTILITY PANELS	JS TW	RG FW	70
MARK	DATE	DESCRIPTIONS	BY	CH'D	CCO#
REVISIONS					

CONTRACT CHANGE ORDER NO. 70
SHEET 33 OF 45

DETAILS
TOWER AND SUSPENSION CABLE TOWER POWER AND LIGHTING
SCALE: 1:10

E-285C

THIS PLAN ACCURATE FOR ELECTRICAL WORK ONLY.

ALL DIMENSIONS ARE IN MILLIMETERS UNLESS OTHERWISE SHOWN.

FOR REDUCED PLANS ORIGINAL SCALE IS IN MILLIMETERS 0 20 40 60 80

DGN FILE =>t:\13103\ms\pse\SAS Struc\CCO\SAS CCO70\2009-12-02 issued for Submittal\04-0120f1_0288S03.dgn
USERNAME =>llorico

CU 04251 | EA 0120F1

STATE OF CALIFORNIA - DEPARTMENT OF TRANSPORTATION
Caltrans

DESIGN OVERSIGHT
BEHZAD GOLEMOHAMMADI

CALCULATED/DESIGNED BY
CHECKED BY
FK
EDC
DATE 10/01
11/01
REVISED BY
DATE REVISED

LAST REVISION 00-00-00
DATE PLOTTED => 12/10/2009
TIME PLOTTED => 4:03:53 PM

DIST	COUNTY	ROUTE	KILOMETER POST TOTAL PROJECT	SHEET No	TOTAL SHEETS
04	SF	80	13.2/13.9	288 S4	1204

REGISTERED ELECTRICAL ENGINEER DATE

REGISTERED PROFESSIONAL ENGINEER FADI WALIEDDINE No. 11465 Exp. 12/31/2009 ELECTRICAL STATE OF CALIFORNIA

PLANS APPROVAL DATE

PB AMERICAS, Inc.
A Parsons Brinckerhoff Company
303 Second St., Suite 700N
San Francisco, CA 94107-1317

The State of California or its officers or agents shall not be responsible for the accuracy or completeness of electronic copies of this plan sheet.

Caltrans now has a web site! To get to the web site, go to http://www.dot.ca.gov

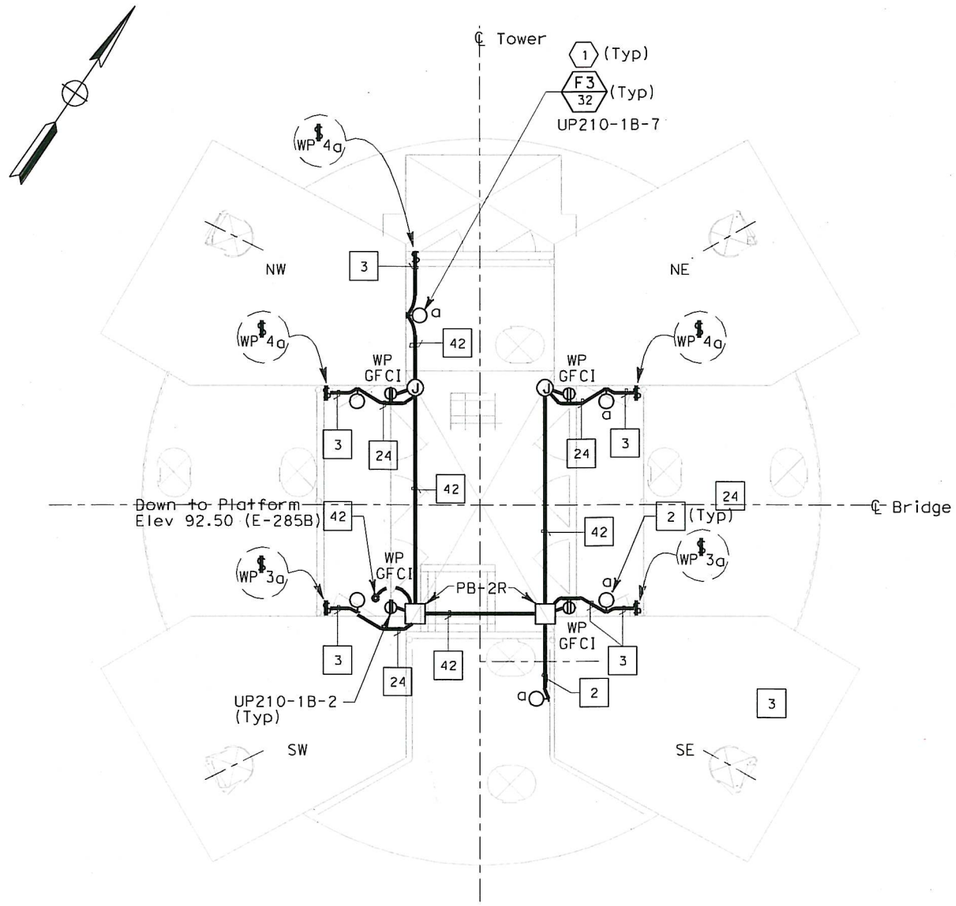

PLAN AT ELEVATION 127.00 m

NOTES:

1. References:
   - For typical conduit installation details, see sheet E-268.
   - For utility panel UP-210-1A and UP-210-1B panel schedules, see sheets E-279 and E-280.
   - For types of pull boxes, splice boxes and enclosures, see sheets E-83 and E-169.
   - For conduit and cable tray schedules, see sheets starting at E-401.
   - For lighting installation details, see sheet E-267.
   - For lighting fixture schedule, see sheet E-273.
2. All conduits and fittings routed exposed at grating shall be rigid galvanized steel, PVC coated.
3. Fixture mounting height elevation shall be 2.125 m above floor/platform elevation UNO.
4. Electrical conduits shall enter the tower shafts between stiffeners A3 and A4 only. For conduit entry details, see Structural Utility drawings.
5. For other related work not shown on this sheet, see Electrical Special Provisions.

REQUEST FOR INFORMATION NOT ADDRESSED IN THIS CCO REMAIN IN FORCE

MARK	DATE	DESCRIPTIONS	BY	CH'D	CCO#
0	12/11/09	TOWER UTILITY PANELS	SYC	RG FW	70

REVISIONS

CONTRACT CHANGE ORDER NO. 70
SHEET 34 OF 45

DETAILS
TOWER AND SUSPENSION CABLE
TOWER POWER AND LIGHTING
NO SCALE

E-285D

DATE	REVISED BY	DATE	REVISED

CALCULATED/DESIGNED BY FK DATE 10/01
CHECKED BY EDC 11/01

DESIGN OVERSIGHT
BEHZAD GOLEMOHAMMADI

STATE OF CALIFORNIA - DEPARTMENT OF TRANSPORTATION
Caltrans

THIS PLAN ACCURATE FOR ELECTRICAL WORK ONLY.

ALL DIMENSIONS ARE IN MILLIMETERS UNLESS OTHERWISE SHOWN.

FOR REDUCED PLANS ORIGINAL SCALE IS IN MILLIMETERS 0 20 40 60 80

DGN FILE =>t:\13103\ms\pse\SAS Struc\CCO\SAS CCO70\2009-12-02 issued for Submittal\04-0120f1_0288S04.dgn
USERNAME =>llorico

CU 04251 EA 0120F1

LAST REVISION 00-00-00
DATE PLOTTED => 12/10/2009
TIME PLOTTED => 4:04:08 PM

DIST	COUNTY	ROUTE	KILOMETER POST TOTAL PROJECT	SHEET No	TOTAL SHEETS
04	SF	80	13.2/13.9	289 R2	1204

REGISTERED ELECTRICAL ENGINEER 12/19/02 DATE

12-6-04
PLANS APPROVAL DATE

REGISTERED PROFESSIONAL ENGINEER JENS ERLINGSSON No. 8249 Exp. 9/30/06 ELECTRICAL STATE OF CALIFORNIA

PB POWER, Inc.
A Parsons Brinckerhoff Company
303 Second St., Suite 700N
San Francisco, CA 94107-1317

The State of California or its officers or agents shall not be responsible for the accuracy or completeness of electronic copies of this plan sheet.

Caltrans now has a web site! To get to the web site, go to http://www.dot.ca.gov

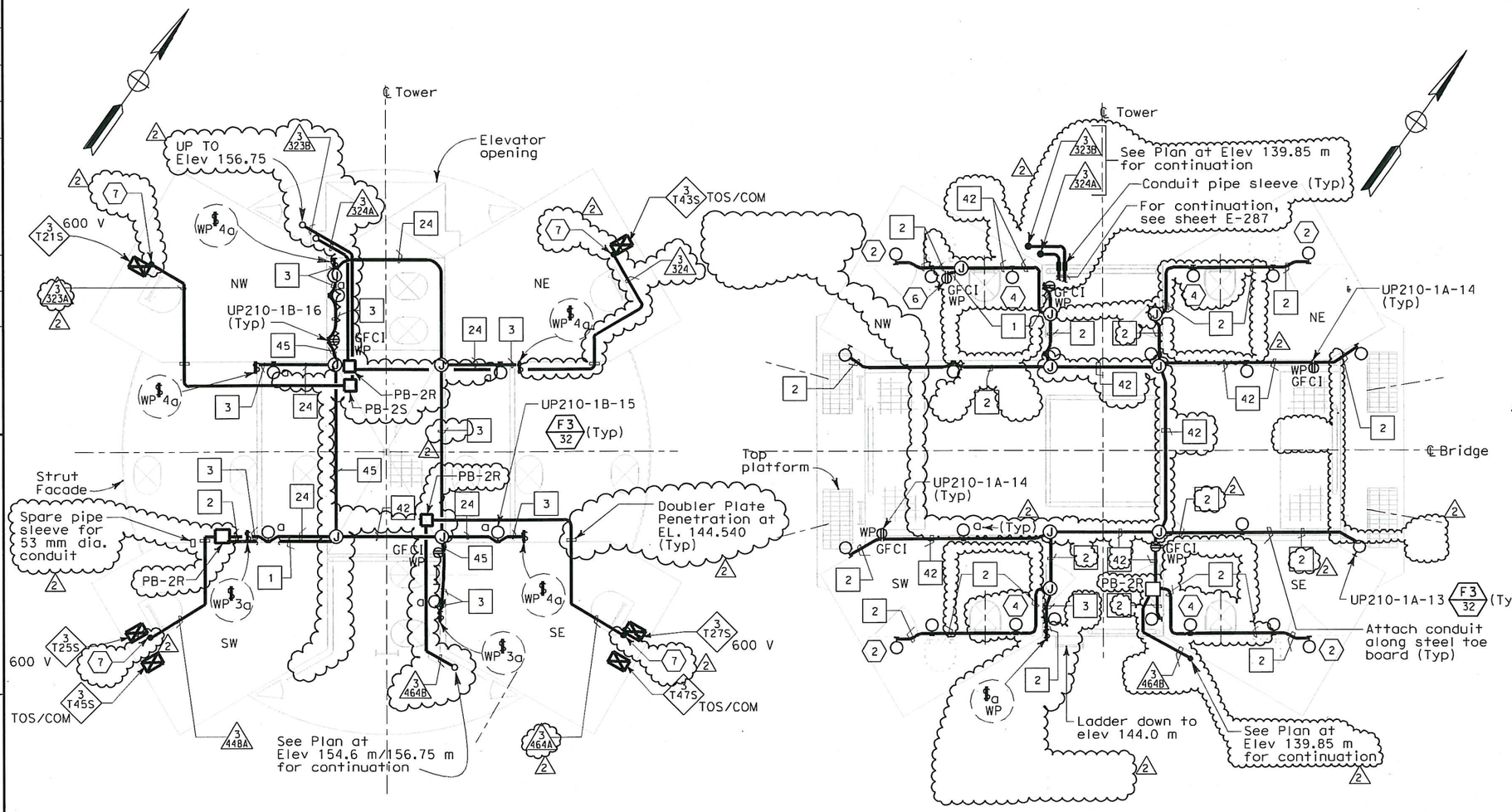

PLAN AT ELEVATION 139.85 m
SCALE: 1:40

PLAN AT ELEVATIONS 154.6 m TO 156.75 m
SCALE: 1:40

SHEET NOTES:

1. Deleted.
2. Fixture mounting height elevation shall be 158.5 m.
3. Deleted.
4. Fixture mounting height elevation shall be 159.25 m.
5. Conduit from elevation 89.85 up to elevation 156.75.
6. Receptacle mounting height elevation shall be 158.450 m.
7. Conduit down to cable tray located below EL. 143.00 diaphragm.

NOTES:

1. References:
   - For utility panels UP210-1A and UP210-1B, panel schedules see sheets E-279 and E-280.
   - For types of pull boxes, splice boxes and enclosures, see sheets E-83 and E-169.
   - For conduit and cable tray schedules, see sheets starting at E-401.
   - For lighting installation details, see sheet E-267.
   - For lighting fixture schedule, see sheet E-263.
   - Deleted.
   - For typical conduit installation details, see sheet E-268.
2. All conduits and fittings routed exposed at grating shall be rigid galvanized steel, PVC coated.
3. Fixture mounting height shall be 2.125 m above floor/platform elevation UNO.
4. Electrical conduits shall enter the tower shafts between stiffeners A3 and A4 only. For conduit entry details, see Structural Utility drawings.
5. For other related work not shown on this sheet, see Electrical Special Provisions.

REGISTERED PROFESSIONAL ENGINEER MAXWELL FUMIO TAKAKI No. E 8651 Exp. 9/30/2008 ELECTRICAL STATE OF CALIFORNIA

FOR REVISION ONLY
1

REGISTERED PROFESSIONAL ENGINEER FADI WALIEDDINE No. 11465 Exp. 12/31/2009 ELECTRICAL STATE OF CALIFORNIA

FOR REVISION ONLY
2

REQUEST FOR INFORMATION NOT ADDRESSED IN THIS CCO REMAIN IN FORCE

MARK	DATE	DESCRIPTIONS	BY	CH'D	CCO#
2	12/11/09	TOWER UTILITY PANELS	SYC RG	FW	70
1	02/19/08	ELECTRICAL MODIFICATIONS	MP EL	RR	42

REVISIONS

CONTRACT CHANGE ORDER NO. 70
SHEET 35 OF 45

DETAILS
TOWER AND SUSPENSION CABLE TOWER POWER AND LIGHTING
SCALE 1:50

E-286

THIS PLAN ACCURATE FOR ELECTRICAL WORK ONLY.

ALL DIMENSIONS ARE IN MILLIMETERS UNLESS OTHERWISE SHOWN

FOR REDUCED PLANS ORIGINAL SCALE IS IN MILLIMETERS 0 20 40 60 80

DGN FILE =>t:\13103\ms\pse\SAS Struc\CCO\SAS CCO70\2009-12-02 issued for Submittal\04-0120f1_0289R02.dgn
USERNAME =>llorico

CU 04251 | EA 0120F1

LAST REVISION 00-00-00 | DATE PLOTTED => 12/10/2009 | TIME PLOTTED => 4:04:22 PM

STATE OF CALIFORNIA - DEPARTMENT OF TRANSPORTATION
Caltrans

DESIGN OVERSIGHT: BEHZAD GOLEMOHAMMADI

CALCULATED/DESIGNED BY: FK | DATE 10/01 | REVISED BY
CHECKED BY: EDC | 11/01 | DATE REVISED

DIST	COUNTY	ROUTE	KILOMETER POST TOTAL PROJECT	SHEET No	TOTAL SHEETS
04	SF	80	13.2/13.9	290R2	1204

REGISTERED ELECTRICAL ENGINEER 12/19/02 DATE

12-6-04
PLANS APPROVAL DATE

REGISTERED PROFESSIONAL ENGINEER JENS ERLINGSSON No. 8249 Exp. 9/30/06 ELECTRICAL STATE OF CALIFORNIA

PB POWER, Inc.
A Parsons Brinckerhoff Company
303 Second St., Suite 700N
San Francisco, CA 94107-1317

The State of California or its officers or agents shall not be responsible for the accuracy or completeness of electronic copies of this plan sheet.

Caltrans now has a web site! To get to the web site, go to http://www.dot.ca.gov

Caltrans Metric

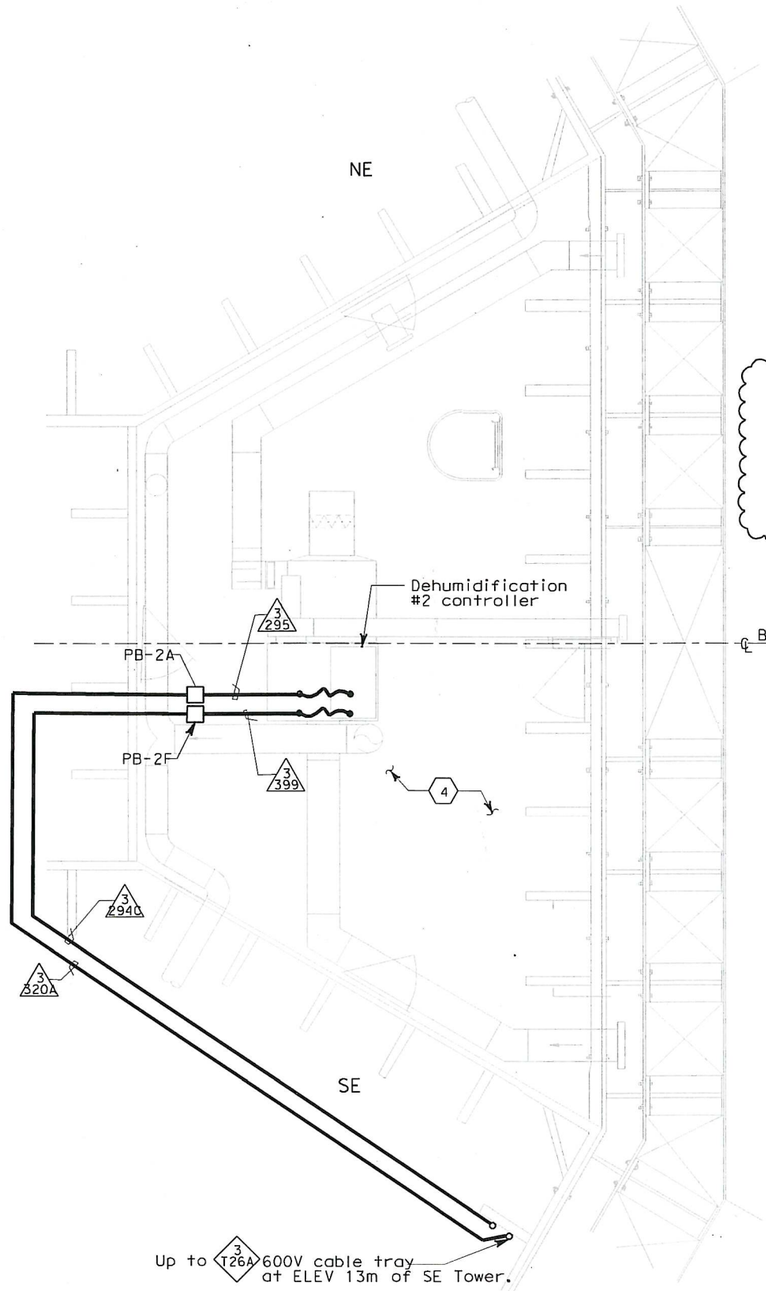

DEHUMIDIFICATION UNIT #2 PLAN- AT ELEV. 9.0 m

NO SCALE

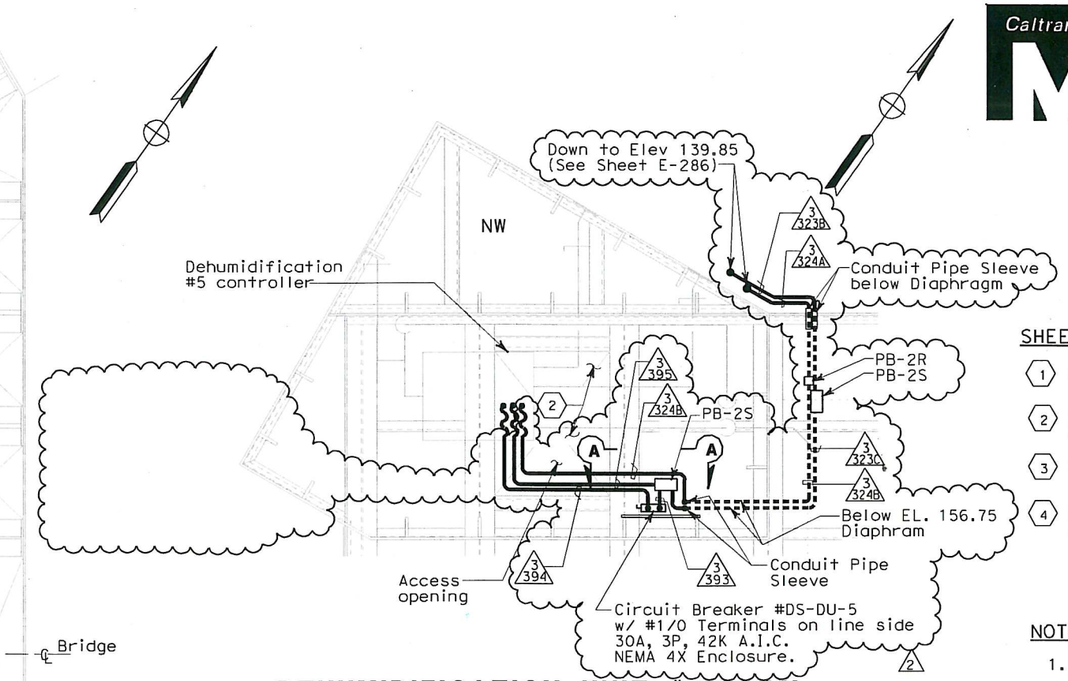

DEHUMIDIFICATION UNIT #5 PLAN AT ELEV. 158.0 m

SCALE: 1:20

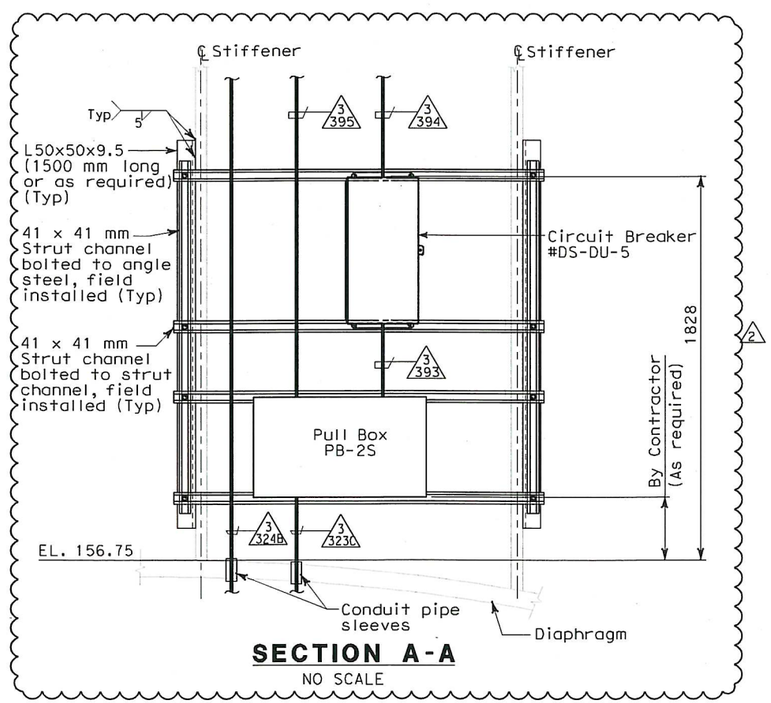

SECTION A-A

NO SCALE

SHEET NOTES:

1. Deleted.
2. For lighting and receptacles in this area, see plan at elevations 154.6 m to 156.75 m on sheet E-268.
3. Deleted.
4. For lighting and receptacles in this area, see sheet E-266.

NOTES:

1. References:
   - For types of pull boxes, splice boxes and enclosures, see sheets E-83 and E-169.
   - For conduit and cable tray schedules, see sheets starting at E-401.
   - For typical conduit installation details, see sheet E-268.
2. For other related work not shown on this sheet, see Electrical Special Provisions.

REGISTERED PROFESSIONAL ENGINEER FADI WALIEDDINE No. 11465 Exp. 12/31/2009 ELECTRICAL STATE OF CALIFORNIA

FOR REVISION ONLY 2

REGISTERED PROFESSIONAL ENGINEER NASSELL FUMIO TAKAKI No. E 8651 Exp. 9/30/2008 ELECTRICAL STATE OF CALIFORNIA

FOR REVISION ONLY 1

REQUEST FOR INFORMATION NOT ADDRESSED IN THIS CCO REMAIN IN FORCE

MARK	DATE	DESCRIPTIONS	BY	CH'D	CCO#
2	09/18/09	TOWER UTILITY PANELS	SYC RG	FW	70
1	02/19/08	ELECTRICAL MODIFICATIONS	MP EL	RR	42

REVISIONS

CONTRACT CHANGE ORDER NO. 70
SHEET 36 OF 45

DETAILS
TOWER AND SUSPENSION CABLE TOWER POWER AND LIGHTING

SCALE: AS NOTED

E-287

DATE	REVISED BY	DATE	REVISED
10/01	FK	11/01	EDC

CALCULATED/DESIGNED BY FK
CHECKED BY EDC

DESIGN OVERSIGHT
BEHZAD GOLEMOHAMMADI

STATE OF CALIFORNIA - DEPARTMENT OF TRANSPORTATION
Caltrans

LAST REVISION 00-00-00
DATE PLOTTED => 12/10/2009
TIME PLOTTED => 4:04:38 PM

THIS PLAN ACCURATE FOR ELECTRICAL WORK ONLY.

ALL DIMENSIONS ARE IN MILLIMETERS UNLESS OTHERWISE SHOWN

FOR REDUCED PLANS ORIGINAL SCALE IS IN MILLIMETERS 0 20 40 60 80

DGN FILE =>t:\13103\ms\pse\SAS Struc\CCO\SAS CC070\2009-12-02 issued for Submittal\04-0120f1_0290R02.dgn
USERNAME =>llorico

CU 04251 EA 0120F1

DIST	COUNTY	ROUTE	KILOMETER POST TOTAL PROJECT	SHEET No	TOTAL SHEETS
04	SF	80	13.2/13.9	319 R1	1204

REGISTERED ELECTRICAL ENGINEER 12/19/02 DATE

12-6-04
PLANS APPROVAL DATE

REGISTERED PROFESSIONAL ENGINEER JENS ERLINGSSON No. 8249 Exp. 9/30/06 ELECTRICAL STATE OF CALIFORNIA

PB POWER, Inc.
A Parsons Brinckerhoff Company
303 Second St., Suite 700N
San Francisco, CA 94107-1317

The State of California or its officers or agents shall not be responsible for the accuracy or completeness of electronic copies of this plan sheet.

Caltrans now has a web site! To get to the web site, go to http://www.dot.ca.gov

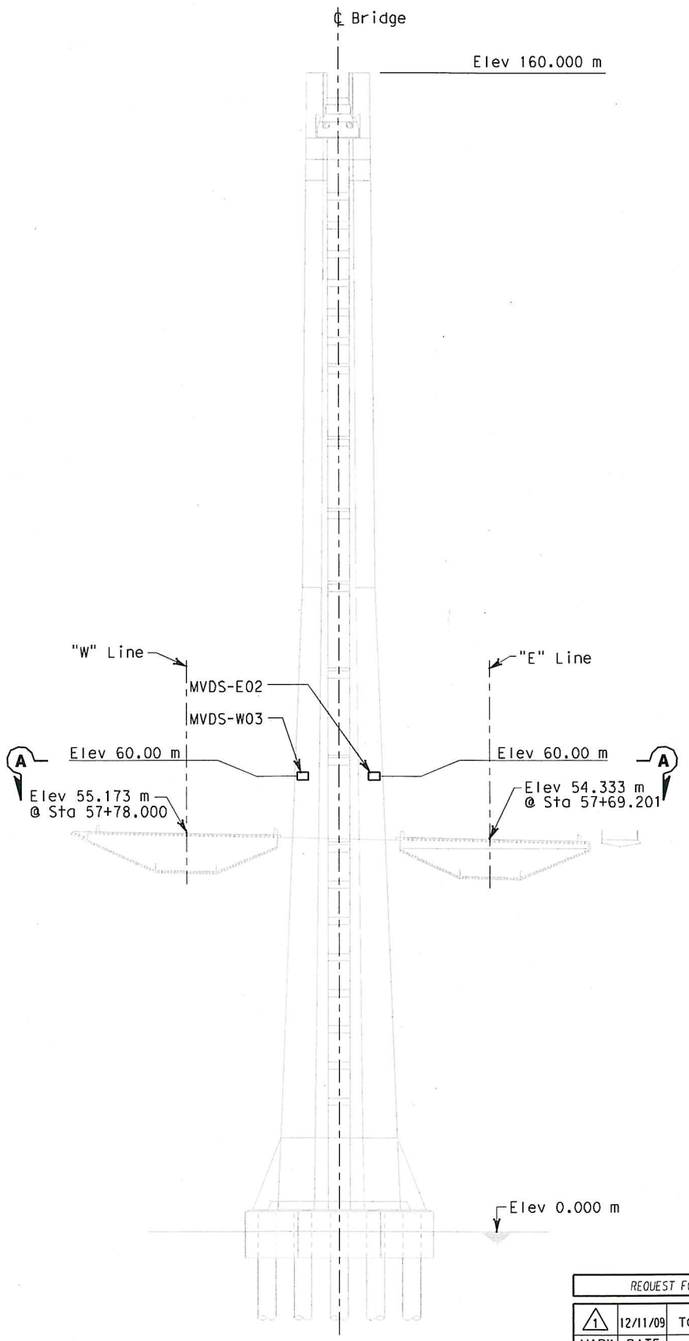

ELEVATION

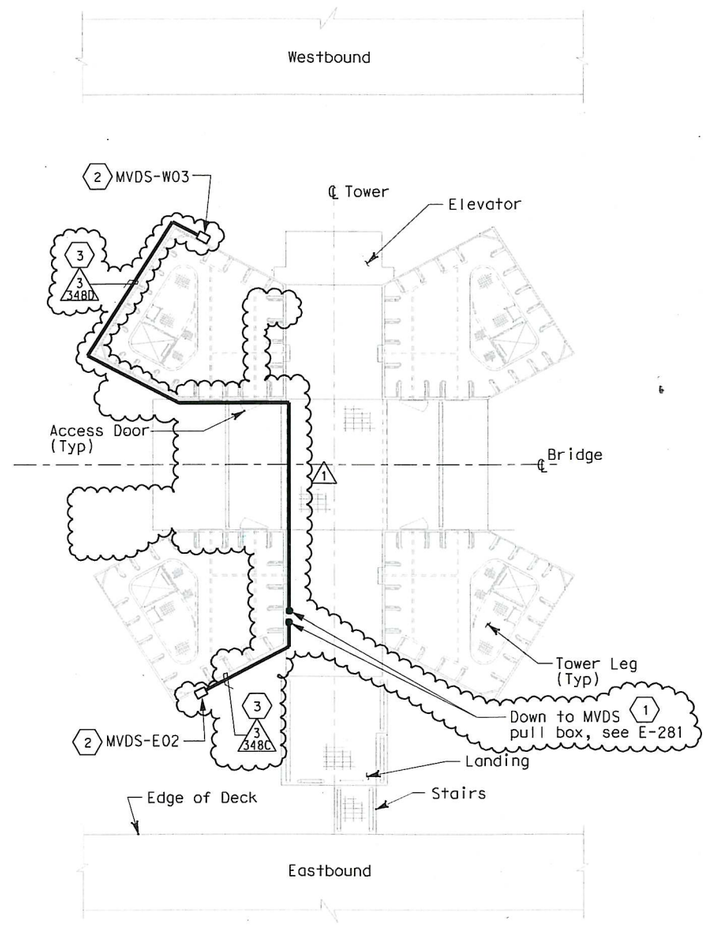

SECTION A-A
PLAN AT ACCESS PLATFORM

SHEET NOTES:

1. MVDS pull box. For conduit routing from the tower to the cabinet on Platform #6, see sheet E-264A. 1 MVDS cable in JCB shall be clearly labeled with the designation of the device ID#.
2. For MVDS bracket mounting details, see Detail 1 and Detail 2 on sheet E-344.
3. Install conduit from MVDS at elevation 60.00 m to MVDS JCB on access platform. Exact conduit routing to be determined by the Contractor.

MVDS SCHEDULE

ID #	ELEMENT STATION	LIGHTPOLE ID	OFFSET m	CABINET ID #	SERVICE PLATFORM REFERENCE SHEET
MVDS-E02	E 57+70	Tower	L 15.5	TOS-06EA	E-73
MVDS-W03	W 57+78	Tower	R 15.5	TOS-06WA	E-73

REQUEST FOR INFORMATION NOT ADDRESSED IN THIS CCO REMAIN IN FORCE

MARK	DATE	DESCRIPTIONS	BY	CH'D	CCO#
1	12/11/09	TOWER UTILITY PANELS	TW	RG FW	70

REVISIONS

CONTRACT CHANGE ORDER NO. 70
SHEET 37 OF 45

REGISTERED PROFESSIONAL ENGINEER FADI WALIEDDINE No. 11465 Exp. ELECTRICAL STATE OF CALIFORNIA

FOR REVISION ONLY 1

DETAILS
TRAFFIC OPERATIONS SYSTEM
MICROWAVE VEHICLE DETECTION SENSOR SYSTEM
TOWER INSTALLATION

NO SCALE

E-345

THIS PLAN IS ACCURATE FOR ELECTRICAL WORK ONLY

ALL DIMENSIONS IN MILLIMETERS UNLESS OTHERWISE SHOWN.

FOR REDUCED PLANS ORIGINAL SCALE IS IN MILLIMETERS 0 20 40 60 80

DGN FILE =>t:\13103\ms\pse\SAS Struc\CCO\SAS CCO70\2009-12-02 issued for Submittal\04-0120f1_0319R01.dgn
USERNAME =>llorico

CU 04251 | EA 0120F1

DATE PLOTTED => 12/10/2009
TIME PLOTTED => 4:04:52 PM

LAST REVISION 00-00-00

STATE OF CALIFORNIA - DEPARTMENT OF TRANSPORTATION
Caltrans

DESIGN OVERSIGHT
BEHZAD GOLEMOHAMMADI

CALCULATED/DESIGNED BY MD
CHECKED BY PBF

DATE	REVISED BY	DATE REVISED
11/01	12/01	

DIST	COUNTY	ROUTE	KILOMETER POST TOTAL PROJECT	SHEET No	TOTAL SHEETS
04	SF	80	13.2/13.9	334 R3	1204

REGISTERED ELECTRICAL ENGINEER 12/19/02 DATE

12-6-04
PLANS APPROVAL DATE

REGISTERED PROFESSIONAL ENGINEER JENS ERLINGSSON No. 8249 Exp. 9/30/06 ELECTRICAL STATE OF CALIFORNIA

PB POWER, Inc.
A Parsons Brinckerhoff Company
303 Second St., Suite 700N
San Francisco, CA 94107-1317

The State of California or its officers or agents shall not be responsible for the accuracy or completeness of electronic copies of this plan sheet.

Caltrans now has a web site! To get to the web site, go to: http://www.dot.ca.gov

Caltrans Metric

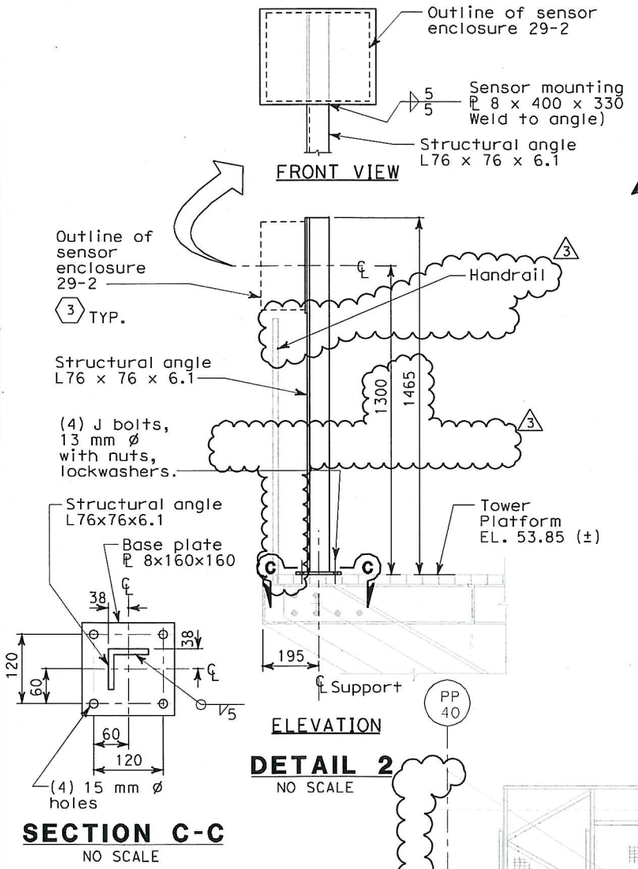

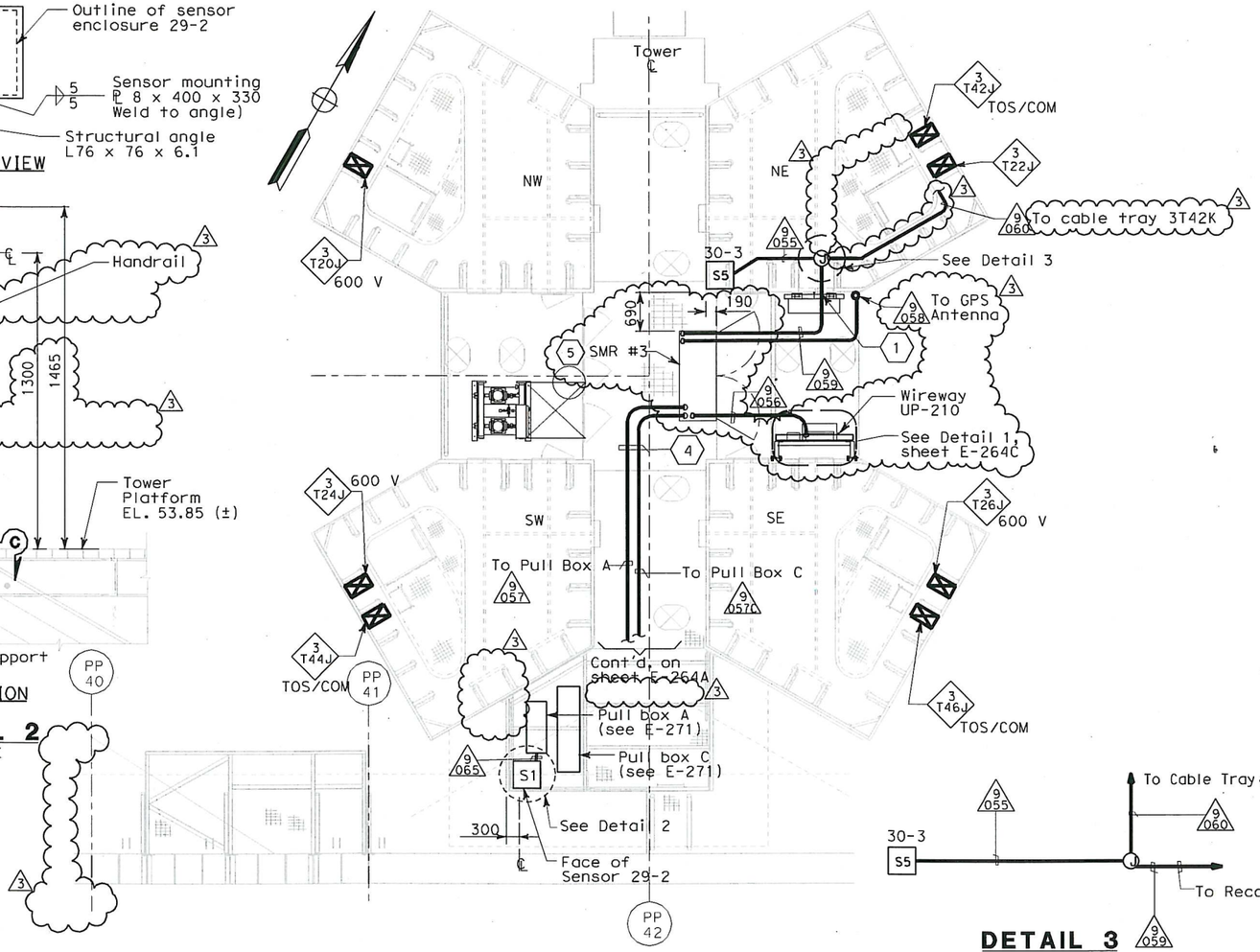

PLAN AT MAIN TOWER, ELEV 53.85 m

SCALE 1:50

Some conduits and equipment are not shown for clarity. See sheets E-264, E-264B, E-281 and E-345 for more conduit and equipment information

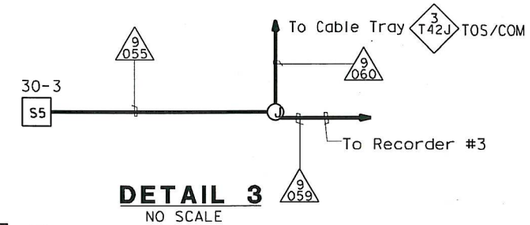

DETAIL 3
NO SCALE

NOTES:

1. For other related work not shown on this drawing, see Electrical Special Provisions.
2. References:
   - For nameplates, sensor enclosures and recorder schedules, see sheets E-379, E-380 and E-381.
   - For cable block diagram, see sheets E-382, E-383 and E-384.
   - For general notes on the strong motion detection system, see sheet E-361.
   - For circuit and conduit/cable tray schedules, see sheets starting at E-401.
3. All conduits and fittings located outside or inside pier shall be rigid galvanized steel, PVC coated.
4. Deleted.
5. For Section B-B, see sheet E-264A.

SHEET NOTES:

(1) Pipe sleeves shall be provided with watertight seals after conduits are installed. ~~Spare sleeves shall be~~ capped and plugged. Conduit is at El. 56.422. 3

(2) Deleted

(3) For nameplate engraving, see nameplate Schedule on sheet E-379.

(4) All conduits which thereafter cross the access walkways shall be raised to a level of at least 2438 above the grating to pass overhead, allowing free walkways on the remaining three quadrants of the platform. Door on north face of SE tower shaft shall remain accessible.

(5) For SMR #3 details, see sheet E-264E. 3

REQUEST FOR INFORMATION NOT ADDRESSED IN THIS CCO REMAIN IN FORCE

MARK	DATE	DESCRIPTIONS	BY	CH'D	CCO#
3	09/18/09	TOWER UTILITY PANELS	TW	RG FW	70
2	10/03/08	STRONG MOTION SYSTEM	RG	FW	74
1	02/19/08	ELECTRICAL MODIFICATIONS	MP EL	RR	42

REVISIONS

CONTRACT CHANGE ORDER NO. 70
SHEET 38 OF 45

REGISTERED PROFESSIONAL ENGINEER MAXWELL FUMIO TAKART No. E 8651 Exp. 9/30/2008 ELECTRICAL STATE OF CALIFORNIA

FOR REVISION ONLY 1

REGISTERED PROFESSIONAL ENGINEER FADI WALIEDDINE No. 11465 Exp. 12/31/2009 ELECTRICAL STATE OF CALIFORNIA

FOR REVISION ONLY 2 3

STRONG MOTION DETECTION SYSTEM
SAS SUPERSTRUCTURE
TOWER PLATFORM CONDUIT AND SENSOR LOCATION

SCALE AS NOTED

E-366

THIS PLAN IS ACCURATE FOR ELECTRICAL WORK ONLY.

ALL DIMENSIONS ARE IN MILLIMETERS UNLESS OTHERWISE SHOWN.

FOR REDUCED PLANS ORIGINAL SCALE IS IN MILLIMETERS 0 20 40 60 80

DGN FILE =>t:\13103\ms\pse\SAS Struc\CCO\SAS CCO70\2009-12-02 issued for Submittal\04-0120f1_0334R03.dgn
USERNAME =>llorico

CU 04251 EA 0120F1

LAST REVISION 00-00-00 DATE PLOTTED => 12/10/2009 TIME PLOTTED => 4:06:41 PM

STATE OF CALIFORNIA - DEPARTMENT OF TRANSPORTATION
Caltrans

DESIGN OVERSIGHT BEHZAD GOLEMOHAMMADI

CALCULATED/DESIGNED BY	EDC	DATE 10/01	REVISED BY	DATE REVISED	AB 2/04
CHECKED BY	KG	11/01			

DIST	COUNTY	ROUTE	KILOMETER POST TOTAL PROJECT	SHEET No	TOTAL SHEETS
04	SF	80	13.2/13.9	381 R3	1204

REGISTERED ELECTRICAL ENGINEER 12/19/02 DATE

12-6-04
PLANS APPROVAL DATE

REGISTERED PROFESSIONAL ENGINEER JENS ERLINGSSON No. 8249 Exp. 9/30/06 ELECTRICAL STATE OF CALIFORNIA

PB POWER, Inc.
A Parsons Brinckerhoff Company
303 Second St., Suite 700N
San Francisco, CA 94107-1317

The State of California or its officers or agents shall not be responsible for the accuracy or completeness of electronic copies of this plan sheet.

Caltrans now has a web site! To get to the web site, go to http://www.dot.ca.gov

Caltrans Metric

REQUEST FOR INFORMATION NOT ADDRESSED IN THIS CCO REMAIN IN FORCE

MARK	DATE	DESCRIPTIONS	BY	CH'D	CCO#
3	09/18/09	TOWER UTILITY PANELS	TW	RG FW	70
2	09/24/08	CABLE ELECTRICAL	RR AG	RG SE	72
1	02/19/08	ELECTRICAL MODIFICATIONS	MP EL	RR	42

REVISIONS

CONTRACT CHANGE ORDER NO. 70
SHEET 39 OF 45

REGISTERED PROFESSIONAL ENGINEER MARCELL FUMIO TAKAKI No. E 8651 Exp. 9/30/2010 ELECTRICAL STATE OF CALIFORNIA (1)
FOR REVISION ONLY

REGISTERED PROFESSIONAL ENGINEER S. A. ESTOQUE, JR. No. E-10151 Exp. 12/31/2008 ELECTRICAL STATE OF CALIFORNIA (2)
FOR REVISION ONLY

REGISTERED PROFESSIONAL ENGINEER FADI WALIEDDINE No. 11465 Exp. 12/31/2009 ELECTRICAL STATE OF CALIFORNIA (3)
FOR REVISION ONLY

CONDUIT DATA

Conduit No.	Reference	Size	Type	Total Fill (mm2)	Allowable Fill (mm2)	Included Cable No.	Conductor Type
3256	E-229	41	Liquidtight flexible metal	425.70	511.11	A-3042-2	3 + 1 gnd #6,#8, 600 V, RHH/RHW insulation
			conduit			A-3043-2	3 + 1 gnd #6,#8, 600 V, RHH/RHW insulation
						Pull rope	Soft-Fiber Polyester
3257	E-229	41	Liquidtight flexible metal	425.70	511.11	A-3043-2	3 + 1 gnd #6,#8, 600 V, RHH/RHW insulation
			conduit			Pull rope	Soft-Fiber Polyester
						A-3042-2	3 + 1 gnd #6,#8, 600 V, RHH/RHW insulation
3258	E-229	41	Liquidtight flexible metal	425.70	511.11	A-3042-2	3 + 1 gnd #6,#8, 600 V, RHH/RHW insulation
			conduit			A-3043-2	3 + 1 gnd #6,#8, 600 V, RHH/RHW insulation
						Pull rope	Soft-Fiber Polyester
3259	E-229	41	Liquidtight flexible metal	425.70	511.11	A-3042-2	3 + 1 gnd #6,#8, 600 V, RHH/RHW insulation
			conduit			A-3043-2	3 + 1 gnd #6,#8, 600 V, RHH/RHW insulation
						Pull rope	Soft-Fiber Polyester
3260	E-229	41	Liquidtight flexible metal	425.70	511.11	A-3042-2	3 + 1 gnd #6,#8, 600 V, RHH/RHW insulation
			conduit			A-3043-2	3 + 1 gnd #6,#8, 600 V, RHH/RHW insulation
						Pull rope	Soft-Fiber Polyester
3261	E-229	41	Liquidtight flexible metal	425.70	511.11	A-3042-2	3 + 1 gnd #6,#8, 600 V, RHH/RHW insulation
			conduit			A-3043-2	3 + 1 gnd #6,#8, 600 V, RHH/RHW insulation
						Pull rope	Soft-Fiber Polyester
3262	E-229	41	Liquidtight flexible metal	425.70	511.11	A-3043-2	3 + 1 gnd #6,#8, 600 V, RHH/RHW insulation
			conduit			A-3042-2	3 + 1 gnd #6,#8, 600 V, RHH/RHW insulation
						Pull rope	Soft-Fiber Polyester
3263	E-229	41	Liquidtight flexible metal	425.70	511.11	A-3042-2	3 + 1 gnd #6,#8, 600 V, RHH/RHW insulation
			conduit			Pull rope	Soft-Fiber Polyester
						A-3043-2	3 + 1 gnd #6,#8, 600 V, RHH/RHW insulation
3264	E-228, E-229	41	Liquidtight flexible metal	425.70	511.11	A-3042-2	3 + 1 gnd #6,#8, 600 V, RHH/RHW insulation
			conduit			A-3043-2	3 + 1 gnd #6,#8, 600 V, RHH/RHW insulation
						Pull rope	Soft-Fiber Polyester
3265	E-228	41	Liquidtight flexible metal	425.70	511.11	A-3043-2	3 + 1 gnd #6,#8, 600 V, RHH/RHW insulation
			conduit			Pull rope	Soft-Fiber Polyester
						A-3042-2	3 + 1 gnd #6,#8, 600 V, RHH/RHW insulation
3266	E-228	41	Liquidtight flexible metal	425.70	511.11	A-3043-2	3 + 1 gnd #6,#8, 600 V, RHH/RHW insulation
			conduit			Pull rope	Soft-Fiber Polyester
						A-3042-2	3 + 1gnd #6,#8, 600 V, RHH/RHW insulation
3267	E-228	41	Liquidtight flexible metal	425.70	511.11	A-3042-2	3 + 1gnd #6,#8, 600 V, RHH/RHW insulation
			conduit			A-3043-2	3 + 1 gnd #6,#8, 600 V, RHH/RHW insulation
						Pull rope	Soft-Fiber Polyester
3268	E-228	41	Liquidtight flexible metal	212.85	511.11	Pull rope	Soft-Fiber Polyester
			conduit			A-3042-2	3 + 1 gnd #6,#8, 600 V, RHH/RHW insulation
3269	E-228	41	Liquidtight flexible metal	212.85	511.11	A-3042-2	3 + 1 gnd #6,#8, 600 V, RHH/RHW insulation
			conduit			Pull rope	Soft-Fiber Polyester
3270	E-228	41	Liquidtight flexible metal	212.85	511.11	A-3042-2	3 + 1 gnd #6,#8, 600 V, RHH/RHW insulation
			conduit			Pull rope	Soft-Fiber Polyester
3271	E-228	41	Liquidtight flexible metal	212.85	511.11	A-3042-2	3 + 1 gnd #6,#8, 600 V, RHH/RHW insulation
			conduit			Pull rope	Soft-Fiber Polyester
3272	E-228	41	Liquidtight flexible metal	212.85	511.11	Pull rope	Soft-Fiber Polyester
			conduit			A-3042-2	3 + 1 gnd #6,#8, 600 V, RHH/RHW insulation
3273	E-228	41	Liquidtight flexible metal	212.85	511.11	A-3042-2	3 + 1 gnd #6,#8, 600 V, RHH/RHW insulation
			conduit			Pull rope	Soft-Fiber Polyester
3274	E-228	41	Liquidtight flexible metal	212.85	511.11	A-3042-2	3 + 1 gnd #6,#8, 600 V, RHH/RHW insulation
			conduit			Pull rope	Soft-Fiber Polyester
3275	E-227, E-228	41	Liquidtight flexible metal	212.85	511.11	A-3042-2	3 + 1gnd #6,#8, 600 V, RHH/RHW insulation
			conduit			Pull rope	Soft-Fiber Polyester
3276	E-227	41	Liquidtight flexible metal	212.85	511.11	A-3042-2	3 + 1 gnd #6,#8, 600 V, RHH/RHW insulation
			conduit			Pull rope	Soft-Fiber Polyester
~~3277~~							
3277A	E-265	27	RGS-PVC coated conduit	121.74	229.03	2119-2	4 pair #22, shielded pairs, 300 V, PE insulation

CONDUIT DATA

Conduit No.	Reference	Size	Type	Total Fill (mm2)	Allowable Fill (mm2)	Included Cable No.	Conductor Type
3278	E-264, E-264A	103	RGS-PVC coated conduit	2108.72 (3)	3324.51	2123-2	1-3/C + gnd #2, 600V, EPR insulation
						A-3057-1	1-3/C + gnd #2, 600V, EPR insulation
						2123	1-3/C + gnd #2, 600V, EPR insulation
						2123-3	1-3/C + gnd #2, 600V, EPR insulation (3)
3281	E-231	53	RGS-PVC coated conduit	625.60	879.42	A-3057-1	1-3/C + gnd #2,600V, RHH/RHW insulation
						UP210-5	2 + 1 gnd #12, 600V, RHH/RHW insulation
						UP210-7	2 + 1 gnd #12, 600V, RHH/RHW insulation
3281A	E-264	53	RGS-PVC coated conduit	527.18 (3)	879.42 (3)	A-3057-1	1-3/C + gnd #2, 600V, RHH/RHW insulation
3282	E-231	41	RGS-PVC coated conduit	425.70	534.55	A-3057-4	3 + 1 gnd #6,#8, 600 V, RHH/RHW insulation
						A-3057-3	3 + 1 gnd #6,#8, 600 V, RHH/RHW insulation
						Pull rope	Soft-Fiber Polyester
3283	E-231	41	RGS-PVC coated conduit	212.85	534.55	Pull rope	Soft-Fiber Polyester
						A-3057-4	3 + 1 gnd #6,#8, 600 V, RHH/RHW insulation
3285	E-231	41	RGS-PVC coated conduit	212.85	534.55	A-3057-3	3 + 1 gnd #6,#8, 600 V, RHH/RHW insulation
						Pull rope	Soft-Fiber Polyester
3286	E-231	41	RGS-PVC coated conduit	212.85	534.55	A-3057-3	3 + 1 gnd #6,#8, 600 V, RHH/RHW insulation
						Pull rope	Soft-Fiber Polyester
3287	E-231	41	RGS-PVC coated conduit	212.85	534.55	A-3057-3	3 + 1 gnd #6,#8, 600 V, RHH/RHW insulation
						Pull rope	Soft-Fiber Polyester
3288	E-231	41	RGS-PVC coated conduit	212.85	534.55	Pull rope	Soft-Fiber Polyester
						A-3057-3	3 + 1 gnd #6,#8, 600 V, RHH/RHW insulation
3290	E-231	41	RGS-PVC coated conduit	212.85	534.55	Pull rope	Soft-Fiber Polyester
						A-3057-4	3 + 1 gnd #6,#8, 600 V, RHH/RHW insulation
3291	E-231	41	RGS-PVC coated conduit	212.85	534.55	Pull rope	Soft-Fiber Polyester
						A-3057-4	3 + 1 gnd #6,#8, 600 V, RHH/RHW insulation
3292	E-231	41	RGS-PVC coated conduit	212.85	534.55	Pull rope	Soft-Fiber Polyester
						A-3057-4	3 + 1 gnd #6,#8, 600 V, RHH/RHW insulation
3293	E-231	41	RGS-PVC coated conduit	212.85	534.55	A-3057-4	3 + 1 gnd #6,#8, 600 V, RHH/RHW insulation
						Pull rope	Soft-Fiber Polyester
3294	E-264, E-264A	41	RGS-PVC coated conduit	147.25	414.28	2120-1	1-3/C #14, 600 V, EPR insulation
					(3)	2120-2	1-3/C #16, 600 V, EPR insulation (3)
3295	E-287	53	RGS-PVC coated conduit	754.18	1255.65	Pull rope	Soft-Fiber Polyester
						2120	1-3/C + gnd #1/0,600 V, EPR insulation
3297	E-264, E-264A	27	RGS-PVC coated conduit	121.74	229.03	2119-2	4 pair #22, shielded pairs, 300 V, PE insulation

For continuation, see next sheet.

CONDUIT AND TRAY SCHEDULE

E-426

STATE OF CALIFORNIA - DEPARTMENT OF TRANSPORTATION
Caltrans

DESIGN OVERSIGHT
BEHZAD GOLEMOHAMMADI

CALCULATED/DESIGNED BY PBP
CHECKED BY AB
DATE 8/02 8/02
REVISED BY DATE REVISED

LAST REVISION 00-00-00
DATE PLOTTED => 12/10/2009
TIME PLOTTED => 4:06:57 PM

FOR REDUCED PLANS ORIGINAL SCALE IS IN MILLIMETERS 0 20 40 60 80

DGN FILE =>t:\13103\ms\pse\SAS Struc\CCO\SAS CC070\2009-12-02 issued for Submittal\04-0120f1_0381R03.dgn
USERNAME =>llorico

CU 04251 EA 0120F1

DIST	COUNTY	ROUTE	KILOMETER POST TOTAL PROJECT	SHEET No	TOTAL SHEETS
04	SF	80	13.2/13.9	382 R2	1204

REGISTERED ELECTRICAL ENGINEER 12/19/02 DATE

12-6-04
PLANS APPROVAL DATE

REGISTERED PROFESSIONAL ENGINEER JENS ERLINGSSON No. 8249 Exp. 9/30/06 ELECTRICAL STATE OF CALIFORNIA

PB POWER, Inc.
A Parsons Brinckerhoff Company
303 Second St., Suite 700N
San Francisco, CA 94107-1317

The State of California or its officers or agents shall not be responsible for the accuracy or completeness of electronic copies of this plan sheet.

Caltrans now has a web site! To get to the web site, go to http://www.dot.ca.gov

Caltrans Metric

REQUEST FOR INFORMATION NOT ADDRESSED IN THIS CCO REMAIN IN FORCE

MARK	DATE	DESCRIPTIONS	BY	CH'D	CCO#
2	09/18/09	TOWER UTILITY PANELS	JS TW	RG	70
1	02/19/08	ELECTRICAL MODIFICATIONS	MP EL	RR	42

REVISIONS

CONTRACT CHANGE ORDER NO. 70
SHEET 40 OF 45

REGISTERED PROFESSIONAL ENGINEER MAXWELL FUMIO TAKATA No. E 8651 Exp. 9/30/2008 ELECTRICAL STATE OF CALIFORNIA

FOR REVISION ONLY 1

REGISTERED PROFESSIONAL ENGINEER FADI WALIEDDINE No. 11465 Exp. 12/31/2009 ELECTRICAL STATE OF CALIFORNIA

FOR REVISION ONLY 2

CONDUIT DATA

Conduit No.	Reference	Size	Type	Total Fill (mm²)	Allowable Fill (mm²)	Included Cable No.	Conductor Type
3298	E-265	53	RGS-PVC coated conduit	102.61	879.42	Pull rope	Soft-Fiber Polyester
						UP210-9	1-3/C #12,600 V, EPR insulation
3311	E-265	53	RGS conduit	0.00	879.42	Pull rope	Soft-Fiber Polyester
3316	E-264B, E-264C	78	RGS-PVC coated conduit	1300.80	1935.24	Pull rope	Soft-Fiber Polyester
	E-278, E-284					UP210-2 & 4	1-4/C + gnd #6, 600 V, EPR insulation
						UP210-14 & 18	1-4/C + gnd #8, 600 V, EPR insulation
						UP210-21	1-2/C + gnd #8, 600V EPR insulation
						UP210-23	1-2/C + gnd #8, 600V EPR insulation
						UP210-26	1-2/C + gnd #8, 600V EPR insulation
3316A	E-266	53	RGS-PVC coated conduit	581.18	879.42	Pull rope	Soft-Fiber Polyester
						UP210-2	1-2/C + gnd #8, 600V EPR insulation
						UP210-4	1-2/C + gnd #8, 600V EPR insulation
						UP210-26	1-2/C + gnd #10, 600V EPR insulation
3319	E-264, E-264A	78	RGS-PVC coated conduit	1655.61	1935.24	2121	1-3/C + gnd #1/0, 600 V, EPR insulation
						2120	1-3/C + gnd #1/0, 600 V, EPR insulation
						2121-1	1-3/C #14,600 V, EPR insulation
						2121-2	1-3/C #16, 600 V, EPR insulation
3320	E-260	78	RGS-PVC coated conduit	1281.36	1935.24	2120	1-3/C + gnd #1/0, 600 V, EPR insulation
						Pull rope	Soft-Fiber Polyester
						2123-2	1-3/C + gnd #2, 600 V, EPR insulation
3320A	E-287	53	RGS-PVC coated conduit	754.18	879.42	2120	1-3/C + gnd #1/0, 600 V, EPR insulation
						Pull rope	Soft-Fiber Polyester
3322	E-264, E-264A	78	RGS-PVC coated conduit	754.18	1935.24	2119-A	1-3/C + gnd #1/0, 600 V, EPR insulation
						Pull rope	Soft-Fiber Polyester
3322C	E-265	78	RGS-PVC coated conduit	754.18	1935.24	2119-A	1-3/C + gnd #1/0, 600 V, EPR insulation
						Pull rope	Soft-Fiber Polyester
3323	E-264	78	RGS-PVC coated conduit	901.43	1935.24	2121-2	1-3/C #16, 600 V, EPR insulation
						2121-1	1-3/C #14, 600 V, EPR insulation
						Pull rope	Soft-Fiber Polyester
						2121	1-3/C + gnd #1/0,600 V, EPR insulation
3323A	E-286	78	RGS-PVC coated conduit	901.43	1935.24	2121-2	1-3/C #16, 600 V, EPR insulation
						2121-1	1-3/C #14, 600 V, EPR insulation
						Pull rope	Soft-Fiber Polyester
						2121	1-3/C + gnd #1/0,600 V, EPR insulation
3323B	E-286, E-287	78	RGS-PVC coated conduit	901.43	1935.24	2121-2	1-3/C #16, 600 V, EPR insulation
						2121-1	1-3/C #14, 600 V, EPR insulation
						Pull rope	Soft-Fiber Polyester
						2121	1-3/C + gnd #1/0,600 V, EPR insulation
3323C	E-287	78	RGS-PVC coated conduit	901.43	1935.24	2121-2	1-3/C #16, 600 V, EPR insulation
						2121-1	1-3/C #14, 600 V, EPR insulation
						Pull rope	Soft-Fiber Polyester
						2121	1-3/C + gnd #1/0,600 V, EPR insulation

CONDUIT DATA

Conduit No.	Reference	Size	Type	Total Fill (mm²)	Allowable Fill (mm²)	Included Cable No.	Conductor Type
3324	E-286	53	RGS-PVC coated conduit	0.00	879.42	Pull rope	Soft-Fiber Polyester
3324A	E-286, E-287	53	RGS-PVC coated conduit	0.00	879.42	Pull rope	Soft-Fiber Polyester
3324B	E-287	53	RGS-PVC coated conduit	0.00	879.42	Pull rope	Soft-Fiber Polyester
3329	E-265	53	RGS-PVC coated conduit	0.00	879.42	Pull rope	Soft-Fiber Polyester
3330	E-264A, E-281	41	RGS-PVC coated conduit	384.80	534.55	CCTVE01BA	TVP
						CCTVE01BB	TVCP
						CCTVE01AA	TVP
						CCTVE01AB	TVCP
3330C	E-281	41	RGS-PVC coated conduit	192.4	534.55	CCTVE01AA	TVP
						CCTVE01AB	TVCP
3330D	E-281	41	RGS-PVC coated conduit	192.4	534.55	CCTVE01BA	TVP
						CCTVE01BB	TVCP
3330E	E-281	41	RGS-PVC coated conduit	192.4	534.55	CCTVE01AA	TVP
						CCTVE01AB	TVCP
3330F	E-281	41	RGS-PVC coated conduit	192.4	534.55	CCTVE01BA	TVP
						CCTVE01BB	TVCP
3333	E-264, E-264B	78	RGS-PVC coated conduit	754.18	1935.24	Pull rope	Soft-Fiber Polyester
						2121	1-3/C + gnd #1/0,600 V, EPR insulation
3337	E-264B	78	RGS-PVC coated conduit	618.45	1935.24	Pull rope	Soft-Fiber Polyester
						UP210-6 & 8	1-4/C + gnd #6, 600 V, EPR insulation
						UP210-13 & 17	1-4/C + gnd #8, 600 V, EPR insulation
3337A	E-266	53	RGS-PVC coated conduit	332.45	879.42	Pull rope	Soft-Fiber Polyester
						UP210-6 & 8	1-4/C + gnd #6, 600 V, EPR insulation

For continuation, see next sheet.

CONDUIT AND TRAY SCHEDULE

E-427

REVISED BY	DATE REVISED
PBP	8/02

CALCULATED/DESIGNED BY	CHECKED BY
AB	8/02

DESIGN OVERSIGHT
BEHZAD GOLEMOHAMMADI

STATE OF CALIFORNIA - DEPARTMENT OF TRANSPORTATION
Caltrans

LAST REVISION 00-00-00

DATE PLOTTED => 12/10/2009
TIME PLOTTED => 4:07:13 PM

FOR REDUCED PLANS ORIGINAL SCALE IS IN MILLIMETERS 0 20 40 60 80

DGN FILE =>t:\13103\ms\pse\SAS Struc\CCO\SAS CCO70\2009-12-02 issued for Submittal\04-0120f1_0382R02.dgn
USERNAME =>llorico

CU 04251 EA 0120F1

DIST	COUNTY	ROUTE	KILOMETER POST TOTAL PROJECT	SHEET No	TOTAL SHEETS
04	SF	80	13.2/13.9	383 R2	1204

REGISTERED ELECTRICAL ENGINEER 12/19/02 DATE

12-6-04
PLANS APPROVAL DATE

REGISTERED PROFESSIONAL ENGINEER JENS ERLINGSSON No. 8249 Exp. 9/30/06 ELECTRICAL STATE OF CALIFORNIA

PB POWER, Inc.
A Parsons Brinckerhoff Company
303 Second St., Suite 700N
San Francisco, CA 94107-1317

The State of California or its officers or agents shall not be responsible for the accuracy or completeness of electronic copies of this plan sheet.

Caltrans now has a web site! To get to the web site, go to http://www.dot.ca.gov

Caltrans Metric

REQUEST FOR INFORMATION NOT ADDRESSED IN THIS CCO REMAIN IN FORCE

MARK	DATE	DESCRIPTIONS	BY	CH'D	CCO#
2	09/18/09	TOWER UTILITY PANELS	JS TW	RG FW	70
1	02/19/08	ELECTRICAL MODIFICATIONS	MP EL	RR	42

REVISIONS

CONTRACT CHANGE ORDER NO. 70
SHEET 41 OF 45

REGISTERED PROFESSIONAL ENGINEER HANNELL FUMIO TAKAKI No. E 8651 Exp. 9/30/2008 ELECTRICAL STATE OF CALIFORNIA

FOR REVISION ONLY 1

REGISTERED PROFESSIONAL ENGINEER FADI WALIEDDINE No. 11465 Exp. 12/31/2009 ELECTRICAL STATE OF CALIFORNIA

FOR REVISION ONLY 2

CONDUIT DATA

Conduit No.	Reference	Size	Type	Total Fill (mm²)	Allowable Fill (mm²)	Included Cable No.	Conductor Type
3339	E-264, E-264A	53	RGS-PVC coated conduit	754.18	879.42	2125	1-3/C +gnd #1/0, 600 V,EPR insulation
3348	E-264A, E-345	41	RGS-PVC coated conduit	300.88	534.55	MVDSE02A	MVDS DLC
						MVDSW03A	MVDS DLC
3348C	E-345	27	RGS-PVC coated conduit	150.44	229.03	MVDSE02A	MVDS DLC
3348D	E-345	27	RGS-PVC coated conduit	150.44	229.03	MVDSW03A	MVDS DLC
3349	E-264A, E-281	41	RGS-PVC coated conduit	173.82	534.55	CCTVE01BC	TVC
						CCTVE01BD	TVL
3349C	E-281	41	RGS-PVC coated conduit	173.82	534.55	CCTVE01BC	TVC
						CCTVE01BD	TVL
3351A	E-264	53	RGS-PVC coated conduit	527.18	879.42	Pull rope	Soft-Fiber Polyester
						2123-3	1-3C#2 + gnd, 600 V, EPR insulation
3353	E285B	53	RGS-PVC coated conduit	306.56	879.42	Pull Rope	Soft-Fiber Polyester
						UP210-1B-13 & 14	4-#10+gnd, 600V, RHH/RHW insulation
						UP210-1B-5	1-2C#12 + gnd, 600V, EPR insulation
						UP210-1A-5	1-2C#12 + gnd, 600V, EPR insulation
3354	E285B	53	RGS conduit	491.22	879.42	Pull Rope	Soft-Fiber Polyester
						UP210-1B-5	1-2C#12 + gnd, 600V, EPR insulation
						UP210-1A-5	1-2C#12 + gnd, 600V, EPR insulation
						UP210-1B-1 & 6	1-4C#8 + gnd, 600V, EPR insulation

CONDUIT DATA

Conduit No.	Reference	Size	Type	Total Fill (mm²)	Allowable Fill (mm²)	Included Cable No.	Conductor Type
3359	E-264A,E-281	41	RGS-PVC coated conduit	173.82	534.55	CCTVE01AC	TVC
						CCTVE01AD	TVL
3359C	E-281	41	RGS-PVC coated conduit	173.82	534.55	CCTVE01AC	TVC
						CCTVE01AD	TVL
3364	E-285B	53	RGS-PVC coated conduit	205.22	879.42	Pull Rope	Soft-Fiber Polyester
						UP210-1A-5	1-2C#12 + gnd, 600V, EPR insulation
						UP210-1B-5	1-2C#12 + gnd, 600V, EPR insulation

For continuation, see next sheet.

CONDUIT AND TRAY SCHEDULE

E-428

DATE	REVISED BY	DATE REVISED
8/02	PBP	AB 8/02

CALCULATED/DESIGNED BY — CHECKED BY

DESIGN OVERSIGHT — BEHZAD GOLEMOHAMMADI

STATE OF CALIFORNIA - DEPARTMENT OF TRANSPORTATION
Caltrans

LAST REVISION 00-00-00 — DATE PLOTTED => 12/10/2009 TIME PLOTTED => 4:07:28 PM

FOR REDUCED PLANS ORIGINAL SCALE IS IN MILLIMETERS 0 20 40 60 80

DGN FILE =>t:\13103\ms\pse\SAS Struc\CCO\SAS CC070\2009-12-02 issued for Submittal\04-0120f1_0383R02.dgn
USERNAME =>llorico

CU 04251 EA 0120F1

DIST	COUNTY	ROUTE	KILOMETER POST TOTAL PROJECT	SHEET NO.	TOTAL SHEETS
04	SF	80	13.2/13.9	384 R2	1204

REGISTERED ELECTRICAL ENGINEER 12/19/02 DATE

12-6-04
PLANS APPROVAL DATE

REGISTERED PROFESSIONAL ENGINEER JENS ERLINGSSON No. 8249 Exp. 9/30/06 ELECTRICAL STATE OF CALIFORNIA

PB POWER, Inc.
A Parsons Brinckerhoff Company
303 Second St., Suite 700N
San Francisco, CA 94107-1317

The State of California or its officers or agents shall not be responsible for the accuracy or completeness of electronic copies of this plan sheet.

Caltrans now has a web site! To get to the web site, go to http://www.dot.ca.gov

Caltrans Metric

REQUEST FOR INFORMATION NOT ADDRESSED IN THIS CCO REMAIN IN FORCE

MARK	DATE	DESCRIPTIONS	BY	CH'D	CCO#
2	12/02/09	TOWER UTILITY PANELS	JS TW	RG FW	70
1	02/19/08	ELECTRICAL MODIFICATIONS	MP EL	RR	42

REVISIONS

CONTRACT CHANGE ORDER NO. 70
SHEET 42 OF 45

REGISTERED PROFESSIONAL ENGINEER MAXWELL FUMIO TAKAKI No. E 8651 Exp. 9/30/2008 ELECTRICAL STATE OF CALIFORNIA

FOR REVISION ONLY 1

REGISTERED PROFESSIONAL ENGINEER FADI WALIEDDINE No. 11465 Exp. 12/31/2009 ELECTRICAL STATE OF CALIFORNIA

FOR REVISION ONLY 2

CONDUIT DATA

Conduit No.	Reference	Size	Type	Total Fill (mm²)	Allowable Fill (mm²)	Included Cable No.	Conductor Type
3367	E-285B	53	RGS conduit	572	879.42	Pull Rope	Soft-Fiber Polyester
						UP210-1A-9 & 10	1-4C#8 + gnd, 600V, EPR insulation
						UP210-1A-11 & 12	1-4C#8 + gnd, 600V, EPR insulation
3368	E-285B	53	RGS-PVC coated conduit	572	879.42	Pull Rope	Soft-Fiber Polyester
						UP210-1A-9 & 10	1-4C#8 + gnd, 600V, EPR insulation
						UP210-1A-11 & 12	1-4C#8 + gnd, 600V, EPR insulation
3369	E-285B	78	RGS conduit	1063.22	1935.24	Pull Rope	Soft-Fiber Polyester
						UP210-1A-9 & 10	1-4C#8 + gnd, 600V, EPR insulation
						UP210-1A-11 & 12	1-4C#8 + gnd, 600V, EPR insulation
						UP210-1A-5	1-2C#12 + gnd, 600V, EPR insulation
						UP210-1B-5	1-2C#12 + gnd, 600V, EPR insulation
						UP210-1A-1 & 6	1-4C#8 + gnd, 600V, EPR insulation
3375	E-32, E-278, E-264C	53	RGS-PVC coated conduit	754.18	879.42	2123	1-3C#1/0 + gnd, 600V,EPR insulation
3376	E-32, E-278, E-264C	53	Liquidtight flex metal conduit	754.18	837.71	Pull Rope	Soft-Fiber Polyester
						2123-A	1-3C#1/0 + gnd, 600V, EPR Insulation
3377	E-32, E-278, E-264C	53	Liquidtight flex metal conduit	758.77	837.71	Pull Rope	Soft-Fiber Polyester
						2123-B	1-4C#1/0 + gnd, 600V, EPR Insulation
3378	E-264C, E-278	78	RGS-PVC coated conduit	1137.35	1935.24	UP210-21	1-2C#8 + gnd, 600V, EPR insulation
						UP210-22	1-2C#8 + gnd, 600V, EPR insulation
						UP210-23	1-2C#8 + gnd, 600V, EPR insulation
						UP210-24	1-2C#8 + gnd, 600V, EPR insulation
						UP210-26	1-2C#8 + gnd, 600V, EPR insulation
3379	E-264C, E-278	78	RGS-PVC coated conduit	1784.34	1935.24	UP210-9	1-2C#8 + gnd, 600V, EPR insulation
						UP210-5 & 7	1-4C#8 + gnd, 600V, EPR insulation
						UP210-15 & 19	1-4C#8 + gnd, 600V, EPR insulation
						UP210-16 & 20	1-4C#8 + gnd, 600V, EPR insulation
						UP210-13 & 17	1-4C#8 + gnd, 600V, EPR insulation
						UP210-14 & 18	1-4C#8 + gnd, 600V, EPR insulation
3380	E-264C, E-278	78	RGS-PVC coated conduit	1200.19	1935.24	UP210-2 & 4	1-4C#6 + gnd, 600V, EPR insulation
						UP210-6 & 8	1-4C#6 + gnd, 600V, EPR insulation
						UP210-10	1-2C#12 + gnd, 600V, EPR insulation
						UP210-11	1-2C#12 + gnd, 600V, EPR insulation
						UP210-3	1-2C#8 + gnd, 600V, EPR insulation
						UP210-12	1-2C#12 + gnd, 600V, EPR insulation
3381	E-285B	53	RGS-PVC coated conduit	572	879.42	Pull Rope	Soft-Fiber Polyester
						UP210-1B-9 &10	1-4C#8 + gnd 600V, EPR insulation
						UP210-1B-11&12	1-4C#8 + gnd 600V, EPR insulation
3382	E-285B	53	RGS conduit	858	879.42	Pull Rope	Soft-Fiber Polyester
						UP210-1B-9 &10	1-4C#8 + gnd 600V, EPR insulation 2
						UP210-1B-11&12	1-4C#8 + gnd 600V, EPR insulation
						UP210-1B-13&14	1-4C#8 + gnd 600V, EPR insulation
3383	E-285B	53	RGS conduit	572	879.42	Pull Rope	Soft-Fiber Polyester
						UP210-1B-9 &10	1-4C#8 + gnd 600V, EPR insulation
						UP210-1B-11&12	1-4C#8 + gnd 600V, EPR insulation

CONDUIT DATA

Conduit No.	Reference	Size	Type	Total Fill (mm²)	Allowable Fill (mm²)	Included Cable No.	Conductor Type
3393	E-287 2	53	RGS-PVC coated conduit	754.18	1165.23	2121	1-3/C + gnd #1/0, 600 V, EPR insulation
3394	E-287	27	RGS-PVC coated conduit	126.88	229.03	2121-A	1-3/C + gnd #10, 600 V, EPR insulation
3395	E-287	41	RGS-PVC coated conduit	147.25	534.55	2121-1	1-3/C #14, 600 V, EPR insulation
						2121-2	1-3/C #16, 600 V, EPR insulation
3398	E-265	53	RGS-PVC coated conduit	0.00	879.42	Pull rope	Soft-Fiber Polyester
3399	E-287	41	RGS-PVC coated conduit	147.25 2	534.55	2120-1	1-3/C #14, 600 V, EPR insulation
						Pull rope	Soft-Fiber Polyester
						2120-2	1-3/C #16, 600 V, EPR insulation 2
3448A	E-286	53	RGS-PVC coated conduit 2	286	879.42	Pull rope	Soft-Fiber Polyester
						UP210-1B-15&16	1-4C#8 + gnd, 600V, EPR insulation

For continuation, see next sheet.

CONDUIT AND TRAY SCHEDULE

E-429

REVISED BY	DATE REVISED

CALCULATED/DESIGNED BY	CHECKED BY
PBP	AB

DATE 8/02 8/02

DESIGN OVERSIGHT
BEHZAD GOLEMOHAMMADI

STATE OF CALIFORNIA - DEPARTMENT OF TRANSPORTATION
Caltrans

FOR REDUCED PLANS ORIGINAL SCALE IS IN MILLIMETERS 0 20 40 60 80

DGN FILE =>t:\13103\ms\pse\SAS Struc\CCO\SAS CC070\2009-12-02 issued for Submittal\04-0120f1_0384R02.dgn
USERNAME =>llorico

CU 04251 EA 0120F1

LAST REVISION 00-00-00
DATE PLOTTED => 12/10/2009
TIME PLOTTED => 4:07:44 PM

DIST	COUNTY	ROUTE	KILOMETER POST TOTAL PROJECT	SHEET NO	TOTAL SHEETS
04	SF	80	13.2/13.9	385 R2	1204

REGISTERED ELECTRICAL ENGINEER 12/19/02 DATE

12-6-04
PLANS APPROVAL DATE

REGISTERED PROFESSIONAL ENGINEER JENS ERLINGSSON No. 8249 Exp. 9/30/06 ELECTRICAL STATE OF CALIFORNIA

PB POWER, Inc.
A Parsons Brinckerhoff Company
303 Second St., Suite 700N
San Francisco, CA 94107-1317

The State of California or its officers or agents shall not be responsible for the accuracy or completeness of electronic copies of this plan sheet.

Caltrans now has a web site! To get to the web site, go to http://www.dot.ca.gov

Caltrans Metric

REQUEST FOR INFORMATION NOT ADDRESSED IN THIS CCO REMAIN IN FORCE

MARK	DATE	DESCRIPTIONS	BY	CH'D	CCO#
2	12/02/09	TOWER UTILITY PANELS	JS TW	RG FW	70
1	02/19/08	ELECTRICAL MODIFICATIONS	MP EL	RR	42

REVISIONS

CONTRACT CHANGE ORDER NO. 70
SHEET 43 OF 45

REGISTERED PROFESSIONAL ENGINEER MAXWELL FUMIO TAKATA No. E 8651 Exp. 9/30/2008 ELECTRICAL STATE OF CALIFORNIA

FOR REVISION ONLY 1

REGISTERED PROFESSIONAL ENGINEER FADI WALIEDDINE No. 11465 Exp. 12/31/2009 ELECTRICAL STATE OF CALIFORNIA

FOR REVISION ONLY 2

CONDUIT DATA

Conduit No.	Reference	Size	Type	Total Fill (mm2)	Allowable Fill (mm2)	Included Cable No.	Conductor Type
3459A	E-265	41					
3464A	E-286	53	RGS-PVC coated conduit	286	879.42	UP210-1A-13&14	1-4C#8 + gnd, 600V, EPR insulation
3464B	E-286	53	RGS-PVC coated conduit	286	879.42	UP210-1A-13&14	1-4C#8 + gnd, 600V, EPR insulation
3501	E-279	53	RGS-PVC coated conduit	286	879.42	Pull Rope	Soft-Fiber Polyester
	E-284A					UP210-1A-1 & 6	1-4C #8 + gnd, 600V, EPR insulation
3502	E-264B, E-264D	78	RGS conduit	513.46	1935.24	Pull Rope	Soft-Fiber Polyester
						UP210-13 &17	1-4C #8 + gnd, 600V, EPR insulation
						UP210-1A-3	1-2C #8 + gnd, 600V, EPR insulation
3518	E-285C, E-285	53	RGS conduit	777.22	879.42	Pull Rope	Soft-Fiber Polyester
						UP210-1A-5	1-2C#12 + gnd, 600V, EPR insulation
						UP210-1A-3 & 4	1-4C #8 + gnd, 600V, EPR insulation
						UP210-1A-1 & 6	1-4C #8 + gnd, 600V, EPR insulation
						UP210-1B-5	1-2C#12 + gnd, 600V, EPR insulation
3519	E-285C, E-285	53	RGS conduit	858	879.42	Pull Rope	Soft-Fiber Polyester
						UP210-1A-9&10	1-4C#8 + gnd, 600V, EPR insulation
						UP210-1A-11&12	1-4C#8 + gnd, 600V, EPR insulation
						UP210-1A-13&14	1-4C#8 + gnd, 600V, EPR insulation
3520	E-285 E-279	53	RGS conduit	527.18	879.42	Pull Rope	Soft-Fiber Polyester
	E-285A					2123-2	1-3C + gnd, #2, 600V, EPR insulation
3524	E-285A E-279	27	RGS Conduit	133.19	229.03	Pull Rope	Soft-Fiber Polyester
						2123-2A	3 + 1 gnd, #6, 600V, RHH/RHW insulation
3525	E-285A E-279	41	RGS Conduit	271.48	534.55	Pull Rope	Soft-Fiber Polyester
						2123-2B	4 + 1 gnd, #4, 600V, RHH/RHW insulation
3521	E-285 E-279	53	RGS conduit	472.21	879.42	Pull Rope	Soft-Fiber Polyester
	E-285A, E-285C					UP210-1A-5	1-2C#12 + gnd, 600V, EPR insulation
						UP210-1A-3 & 4	4 + 1 gnd, #8, 600V, RHH/RHW insulation
						UP210-1A-1 & 6	4 + 1 gnd, #8, 600V, RHH/RHW insulation
3522	E-285 E-279	53	RGS conduit	858	879.42	Pull Rope	Soft-Fiber Polyester
	E-285A, E-285C					UP210-1A-9&10	1-4C#8 + gnd, 600V, EPR insulation
						UP210-1A-11&12	1-4C#8 + gnd, 600V, EPR insulation
						UP210-1A-13&14	1-4C#8 + gnd, 600V, EPR insulation
3523	E-285 E-279	41	RGS conduit	0.00	534.55	Pull Rope	Soft-Fiber Polyester
	E-285A						
3600	E-264B, E-278	78	RGS-PVC coated conduit	1254.38	1935.24	Pull Rope	Soft-Fiber Polyester
	E-284, E-264C					UP210-9	1-2C#8 + gnd, 600V, EPR insulation
						UP 210-15 & 19	1-4C#8 + gnd, 600V, EPR insulation
						UP210-5 & 7	1-4C#8 + gnd, 600V, EPR insulation
						UP210-22	1-2C#8 + gnd, 600V, EPR insulation
						UP210-24	1-2C#8 + gnd, 600V, EPR insulation
3601	E-279	41	RGS-PVC coated conduit	286	534.55	Pull Rope	Soft-Fiber Polyester
	E-284A					UP210-1A-11&12	1-4C #8 + gnd, 600V, EPR insulation

CONDUIT DATA

Conduit No.	Reference	Size	Type	Total Fill (mm2)	Allowable Fill (mm2)	Included Cable No.	Conductor Type
3602	E-264B	78	RGS conduit	513.46	1935.24	Pull Rope	Soft-Fiber Polyester
						UP 210-15 & 19	1-4C#8 + gnd, 600V, EPR insulation
						UP210-1A-9	1-2C#8 + gnd, 600V, EPR insulation
3701	E-280	53	RGS-PVC coated conduit	572	879.42	Pull Rope	Soft-Fiber Polyester
	E-284A					UP 210-1B-1&6	1 - 4C#8 + gnd, 600V, EPR insulation
						UP210-1B-15&16	1 - 4C#8 + gnd, 600V, EPR insulation

For continuation, see next sheet.

CONDUIT AND TRAY SCHEDULE

E-430

DATE	REVISED BY	DATE	REVISED
8/02	PBP	8/02	AB

CALCULATED/DESIGNED BY — CHECKED BY

DESIGN OVERSIGHT — BEHZAD GOLEMOHAMMADI

STATE OF CALIFORNIA - DEPARTMENT OF TRANSPORTATION
Caltrans

LAST REVISION 00-00-00 — DATE PLOTTED => 12/10/2009 TIME PLOTTED => 4:07:59 PM

FOR REDUCED PLANS ORIGINAL SCALE IS IN MILLIMETERS 0 20 40 60 80

DGN FILE =>t:\13103\ms\pse\SAS Struc\CCO\SAS CCO70\2009-12-02 issued for Submittal\04-0120f1_0385R02.dgn
USERNAME =>llorico

CU 04251 | EA 0120F1

DIST	COUNTY	ROUTE	KILOMETER POST TOTAL PROJECT	SHEET No	TOTAL SHEETS
04	SF	80	13.2/13.9	386 R4	1204

Jens Erlingsson 12/19/02
REGISTERED ELECTRICAL ENGINEER DATE

12-6-04
PLANS APPROVAL DATE

REGISTERED PROFESSIONAL ENGINEER JENS ERLINGSSON No. 8249 Exp. 9/30/06 ELECTRICAL STATE OF CALIFORNIA

PB POWER, Inc.
A Parsons Brinckerhoff Company
303 Second St., Suite 700N
San Francisco, CA 94107-1317

The State of California or its officers or agents shall not be responsible for the accuracy or completeness of electronic copies of this plan sheet.

Caltrans now has a web site! To get to the web site, go to http://www.dot.ca.gov

Caltrans Metric

REQUEST FOR INFORMATION NOT ADDRESSED IN THIS CCO REMAIN IN FORCE

MARK	DATE	DESCRIPTIONS	BY	CH'D	CCO#
4	09/18/09	TOWER UTILITY PANELS	SYC TW	RG FW	70
3	08/03/09	ELECTRICAL WARNING SYSTEMS	RY RR	RG FW	61
2	03/30/09	SERVICE PLATFORM ELECTRICAL CHANGES	RR RY	RG MP	55
1	03/04/08	BARRIER MODIFICATIONS	JS BM	RG SE	44

REVISIONS

CONTRACT CHANGE ORDER NO. 70
SHEET 44 OF 45

REGISTERED PROFESSIONAL ENGINEER S. A. ESTOOLE, JR. No. E-10151 Exp. 12/31/2008 ELECTRICAL STATE OF CALIFORNIA
FOR REVISION ONLY 1

REGISTERED PROFESSIONAL ENGINEER FADI WALIEDDINE No. 11465 Exp. 12/31/2009 ELECTRICAL STATE OF CALIFORNIA
FOR REVISION ONLY 2 3 4

CONDUIT DATA

Conduit No	Reference	Size	Type	Total Fill (mm2)	Allowable Fill (mm2)	Included Cable No.	Conductor Type 4
3702	E-264B	78	RGS conduit	513.46	1935.24	Pull Rope	Soft-Fiber Polyester
						UP 210-14 & 18	1-4C#8 + gnd, 600V, EPR insulation
						UP210-1B-3	1-2C#8 + gnd, 600V, EPR insulation
3717	E-285	53	RGS conduit	205.22	879.42	Pull Rope	Soft-Fiber Polyester
						UP210-1B-5	1-2C#12 + gnd, 600 V, EPR insulation
						UP210-1A-5	1-2C#12 + gnd, 600 V, EPR insulation
3718	E-285	53	RGS conduit	858	879.42	Pull Rope	Soft-Fiber Polyester
						UP210-1B-3 & 4	1-4C#8 + gnd, 600 V, EPR insulation
						UP210-1B-1 & 6	1-4C#8 + gnd, 600 V, EPR insulation
						UP210-1B-9&10	1-4C#8 + gnd, 600 V, EPR insulation
3719	E-285	53	RGS conduit	858	879.42	Pull Rope	Soft-Fiber Polyester
						UP210-1B-11&12	1-4C#8 + gnd, 600 V, EPR insulation
						UP210-1B-13&14	1-4C#8 + gnd, 600 V, EPR insulation
						UP210-1B-15&16	1-4C#8 + gnd, 600 V, EPR insulation
3720	E-285, E-285A	53	RGS conduit	527.18	879.42	Pull Rope	Soft-Fiber Polyester
						2123-3	1-3C+gnd, #2, 600V, EPR insulation
3721	E-285, E-285A	53	RGS conduit	704.81	879.42	Pull Rope	Soft-Fiber Polyester
						UP210-1B-5	2 + 1 gnd, #12, 600V, RHH/RHW insulation
						UP210-1B-3 & 4	4 + 1 gnd, #8, 600V, RHH/RHW insulation
						UP210-1B-1 & 6	4 + 1 gnd, #8, 600V, RHH/RHW insulation
						UP210-1B-9&10	1-4C#8 + gnd, 600 V, EPR insulation
3722	E-285, E-285A	53	RGS conduit	858	879.42	Pull Rope	Soft-Fiber Polyester
						UP210-1B-11&12	1-4C#8 + gnd, 600 V, EPR insulation
						UP210-1B-13&14	1-4C#8 + gnd, 600 V, EPR insulation
						UP210-1B-15&16	1-4C#8 + gnd, 600 V, EPR insulation
3723	E-285, E-285A	53	RGS conduit	0.00	879.42	Pull Rope	Soft-Fiber Polyester
3724	E-285A	27	RGS Conduit	113.19	229.03	Pull Rope	Soft-Fiber Polyester
						2123-3A	3 + 1 gnd, #6, 600V, RHH/RHW insulation
3725	E-285A	41	RGS Conduit	271.48	534.55	Pull Rope	Soft-Fiber Polyester
						2123-3B	4 + 1 gnd, #4, 600V, RHH/RHW insulation
3800	~~E-284A~~, E-264B	53	RGS-PVC coated conduit	286	879.42	UP210-16 & 20	1-4C#8 + gnd, 600 V, EPR insulation
	E-264C, E-278					Pull rope	Soft-Fiber Polyester
3801	E-280, E-284A	53	RGS-PVC coated conduit	286	879.42	UP210-1B-11&12	1-4C#8 + gnd, 600 V, EPR insulation
						Pull rope	Soft-Fiber Polyester
3802	E-264B	53	RGS conduit	513.46	879.42	Pull rope	Soft-Fiber Polyester
						UP210-16 & 20	1-4C#8 + gnd, 600 V, EPR insulation
						UP210-1B-9	1-2C#8 + gnd, 600 V, EPR insulation

CONDUIT DATA

Conduit No	Reference	Size	Type	Total Fill (mm2)	Allowable Fill (mm2)	Included Cable No.	Conductor Type 4
4007A	E-71A	78	Liquidtight Flex. Metal Cond.		1935.24	Pull rope	Soft-Fiber Polyester
4009	E-71A	53	Liquidtight Flex. Metal Cond.	60.80	879.42	Pull rope	Soft-Fiber Polyester
						UP104-5	2 + 1 gnd #10,#10, 600 V, RHH/RHW insulation
4010	E-71A	53	Liquidtight Flex. Metal Cond.	98.42	879.42	UP104-12	2 + 1 gnd #12,#12, 600 V, RHH/RHW insulation
						Pull rope	Soft-Fiber Polyester
						UP104-10	2 + 1 gnd #12,#12, 600 V, RHH/RHW insulation
4029	E-72A	78	Liquidtight Flex. Metal Cond.	1132.03	1935.24		
						UP105-15	1-2/C + gnd #8,600 V, EPR insulation
						Pull rope	Soft-Fiber Polyester
						1201-4	1-9/C #16,600 V, EPR insulation
						1201-3	1-3/C #14,600 V, EPR insulation
						1201-1	1-2/C + gnd #8,600 V, EPR insulation
						1201-6	1-2/C + gnd #8,600 V, EPR insulation
						1201-2	1-2/C + gnd #8,600 V, EPR insulation
4033	E-72A	53	Liquidtight Flex. Metal Cond.	481.89	879.42	Pull rope	Soft-Fiber Polyester
						UP105-5	2 + 1 gnd #12,#12, 600 V, RHH/RHW insulation
						UP105-13	1-2/C + gnd #12,600 V, EPR insulation
						UP105-11	1-2/C + gnd #12,600 V, EPR insulation
						UP105-15	1-2/C + gnd #8,600 V, EPR insulation
4034	E-72A	53	Liquidtight Flex. Metal Cond.	0.00	879.42	Pull rope	Soft-Fiber Polyester
4036	E-73A	53	Liquidtight Flex. Metal Cond.	276.67	879.42	UP106-5	2 + 1 gnd #12,#12, 600 V, RHH/RHW insulation
							1-2/C + gnd #8,600 V, EPR insulation
						Pull rope	Soft-Fiber Polyester

For continuation, see next sheet.

CONDUIT AND TRAY SCHEDULE

E-431

DATE	REVISED BY	DATE REVISED
8/02	PBP	AB 8/02

CALCULATED/DESIGNED BY
CHECKED BY

DESIGN OVERSIGHT
BEHZAD GOLEMOHAMMADI

STATE OF CALIFORNIA - DEPARTMENT OF TRANSPORTATION
Caltrans

LAST REVISION 00-00-00
DATE PLOTTED => 12/10/2009
TIME PLOTTED => 4:08:23 PM

FOR REDUCED PLANS ORIGINAL SCALE IS IN MILLIMETERS 0 20 40 60 80

DGN FILE =>t:\13103\ms\pse\SAS Struc\CCO\SAS CCO70\2009-12-02 issued for Submittal\04-0120f1_0386R04.dgn
USERNAME =>llorico
CU 04251 EA 0120F1

DIST	COUNTY	ROUTE	KILOMETER POST TOTAL PROJECT	SHEET No	TOTAL SHEETS
04	SF	80	13.2/13.9	400 R3	1204

REGISTERED ELECTRICAL ENGINEER 12/19/02 DATE

12-6-04
PLANS APPROVAL DATE

REGISTERED PROFESSIONAL ENGINEER JENS ERLINGSSON No. 8249 Exp. 9/30/06 ELECTRICAL STATE OF CALIFORNIA

PB POWER, Inc.
A Parsons Brinckerhoff Company
303 Second St., Suite 700N
San Francisco, CA 94107-1317

The State of California or its officers or agents shall not be responsible for the accuracy or completeness of electronic copies of this plan sheet.

Caltrans now has a web site! To get to the web site, go to http://www.dot.ca.gov

Caltrans Metric

REQUEST FOR INFORMATION NOT ADDRESSED IN THIS CCO REMAIN IN FORCE

MARK	DATE	DESCRIPTIONS	BY	CH'D	CCO#
3	12/11/09	TOWER UTILITY PANELS	SYC	RG FW	70
2	08/03/09	ELECTRICAL WARNING SYSTEMS	JS TW	RG FW	61
1	03/04/08	BARRIER MODIFICATIONS	JS BM	RG SE	44

REVISIONS

CONTRACT CHANGE ORDER NO. 70
SHEET 45 OF 45

REGISTERED PROFESSIONAL ENGINEER S. A. ESTOQUE, JR. No. E-10151 Exp. 12/31/2009 ELECTRICAL STATE OF CALIFORNIA
FOR REVISION ONLY 1

REGISTERED PROFESSIONAL ENGINEER FADI WALIEDDINE No. 11465 Exp. 12/31/2009 ELECTRICAL STATE OF CALIFORNIA
FOR REVISION ONLY 2 3

CONDUIT DATA

Conduit No.	Reference	Size	Type	Total Fill (mm2)	Allowable Fill (mm2)	Included Cable No.	Conductor Type
5529	E-185	53	RGS conduit	0.00	879.42	Pull rope	Soft-Fiber Polyester
5530	E-185	41	RGS conduit	0.00	534.55	Pull rope	Soft-Fiber Polyester
5531	E-185	41	RGS conduit	0.00	534.55	Pull rope	Soft-Fiber Polyester
5532	E-185	41	RGS conduit	0.00	534.55	Pull rope	Soft-Fiber Polyester
5533	E-185	53	RGS conduit	0.00	879.42	Pull rope	Soft-Fiber Polyester
5534	E-185	53	RGS conduit	0.00	879.42	Pull rope	Soft-Fiber Polyester
5535	E-185	53	RGS conduit	0.00	879.42	Pull rope	Soft-Fiber Polyester
5536	E-185	53	RGS conduit	0.00	879.42	Pull rope	Soft-Fiber Polyester
5537	E-185	53	RGS conduit	0.00	879.42	Pull rope	Soft-Fiber Polyester
5543	E-185	41	RGS conduit	212.85	534.55	Pull rope	Soft-Fiber Polyester
						LP223-2,4A	3 + 1 gnd #6, #8, 600 V, RHH/RHW insulation
5544	E-185	41	RGS conduit	212.85	534.55	Pull rope	Soft-Fiber Polyester
						LP223-6,8A	3 + 1 gnd #6, #8, 600 V, RHH/RHW insulation
5545	E-185	53	RGS conduit	324.29	879.42	Pull rope	Soft-Fiber Polyester
						UP208-4A	1-2/C+gnd #8 ,600V, EPR insulation
						LP223-2,4	1-3/C +gnd #6, 660 V, EPR insulation
5546	E-212	103	RGS conduit	2780.99	3324.51	2391	3-1/C #4/0 + 1/C #1/0 gnd, 15 kV, EPR insulation
						Pull rope	Soft-Fiber Polyester
5547	E-185	53	RGS conduit	0.00	879.42	Pull rope	Soft-Fiber Polyester
5548	E-185	53	RGS conduit	0.00	879.42	Pull rope	Soft-Fiber Polyester
5549	E-185	41	RGS conduit	0.00	534.55	Pull rope	Soft-Fiber Polyester
5550	E-185	41	RGS conduit	0.00	534.55	Pull rope	Soft-Fiber Polyester
5551	E-185	53	RGS conduit	0.00	879.42	Pull rope	Soft-Fiber Polyester
5552	E-185	53	RGS conduit	227.46	879.42	UP208-2A	1-2/C + gnd #8, 600 V, EPR insulation
						Pull rope	Soft-Fiber Polyester
5553	E-185	53	RGS conduit	98.10	879.42	Pull rope	Soft-Fiber Polyester
						2148	1 - 2 pair, shielded #18 with IS/OA, 300 V, PVC jacket
5554	E-185	53	RGS conduit	0.00	879.42	Pull rope	Soft-Fiber Polyester
5555	E-185	41	RGS conduit	527.18	534.55	A-2014-1	1-3/C + gnd #2, 600 V, EPR insulation
						Pull rope	Soft-Fiber Polyester
5556	E-185	53	RGS conduit	324.29	879.42	LP223-6,8	1-3/C + gnd #6, 600 V, EPR insulation
						Pull rope	Soft-Fiber Polyester
5557	E-186	53	RGS conduit	0.00	879.42	Pull rope	Soft-Fiber Polyester
5558	E-186	53	RGS conduit	0.00	879.42	Pull rope	Soft-Fiber Polyester
5597	E-185	53	RGS conduit	0.00	879.42	Pull rope	Soft-Fiber Polyester
7403	E-139	41	RGS conduit	0.00	534.55	Pull rope	Soft-Fiber Polyester
8001	E-293	41	RGS-PVC coated conduit	227.46	534.55	1201-6	1-2/C + gnd #8, 600 V, EPR insulation
						Pull rope	Soft-Fiber Polyester
8002	E-293	41	RGS-PVC coated conduit	454.92	534.55	1201-6	1-2/C +gnd #8, 600 V, EPR insulation
						1201-2	1-2/C + gnd #8, 600 V, EPR insulation
						Pull rope	Soft-Fiber Polyester
8003	E-293	21	RGS-PVC coated conduit	102.61	185.01	2204-4	1-2/C + gnd #12, 600 V, EPR insulation
						Pull rope	Soft-Fiber Polyester
8004	E-293	41	RGS-PVC coated conduit	227.46	534.55	1201-1	1-2/C + gnd #8, 600 V, EPR insulation
						Pull rope	Soft-Fiber Polyester

CONDUIT DATA

Conduit No.	Reference	Size	Type	Total Fill (mm2)	Allowable Fill (mm2)	Included Cable No.	Conductor Type
8005	E-293	41	RGS-PVC coated conduit	126.88	534.55	2204-3	1-2/C + gnd #10, 600 V, EPR insulation
						Pull rope	Soft-Fiber Polyester 3
8006	E-293, E-300	53	RGS-PVC coated conduit	354.34	879.42		
						2204-3	1-2/C + gnd #10, 600 V, EPR insulation
						1201-1	1-2/C + gnd #8, 600 V, EPR insulation 3
						Pull rope	Soft-Fiber Polyester
8007	E-293, E-300	53	RGS-PVC coated conduit	3 126.88	879.42		
						Pull rope	Soft-Fiber Polyester
						2204-3	1-2/C + gnd #10, 600 V, EPR insulation
8008	E-293	53	RGS-PVC coated conduit	645.25	879.42	2204-9	1-3/C #14, 600 V, EPR insulation
						2204-2	1-3/C #14, 600 V, EPR insulation
						2204-1	1-3/C #14, 600 V, EPR insulation
						2204-10	1-3/C #14, 600 V, EPR insulation
						Pull rope	Soft-Fiber Polyester
						2204-11	1-3/C #14, 600 V, EPR insulation
						UP210-3	1-2/C + gnd #8, 600 V, EPR insulation
8010	E-293, 3 E-264C	41	RGS-PVC coated conduit	227.46	534.55	1201-2	1-2/C + gnd #8, 600 V, EPR insulation
						Pull rope	Soft-Fiber Polyester
8011	E-264A, E-293	41	RGS-PVC coated conduit	3 425.90	534.55		3
						2204-1	1-3/C #14, 600 V, EPR insulation
						2204-2	1-3/C #14, 600 V, EPR insulation
						2204-9	1-3/C #14, 600 V, EPR insulation
						2204-10	1-3/C #14, 600 V, EPR insulation
						2204-11	1-3/C #14, 600 V, EPR insulation
						Pull rope	Soft-Fiber Polyester
8012	E-293, E-300	41	RGS-PVC coated conduit	227.46	534.55	Pull rope	Soft-Fiber Polyester
	E-264C 3					UP210-3	1-2/C + gnd #8, 600 V, EPR insulation
8013	E-294	21	RGS-PVC coated conduit	227.46	187.69	2201-6	1-2/C + gnd #8, 600 V, EPR insulation
						Pull rope	Soft-Fiber Polyester
8014	E-264A, E-293	53	RGS-PVC coated conduit	682.38	879.42	1201-6	1-2/C + gnd #8, 600 V, EPR insulation
						1201-2	1-2/C + gnd #8, 600 V, EPR insulation
						1201-1	1-2/C + gnd #8, 600 V, EPR insulation
						Pull rope	Soft-Fiber Polyester
8015	E-293, E-300	41	RGS-PVC coated conduit	130.00	534.55	2204-8	3-Pr #16 with overall shield 600 V, PVC insulation
						Pull rope	Soft-Fiber Polyester
8140	E-294	41	RGS-PVC coated conduit	227.46	534.55	Pull rope	Soft-Fiber Polyester
						2201-1	1-2/C + gnd #8, 600 V, EPR insulation

For continuation, see next sheet.

CONDUIT AND TRAY SCHEDULE

E-445

REVISED BY | DATE REVISED
CALCULATED/DESIGNED BY | CHECKED BY
DESIGN OVERSIGHT
STATE OF CALIFORNIA - DEPARTMENT OF TRANSPORTATION
Caltrans

LAST REVISION 00-00-00
DATE PLOTTED => 12/15/2009
TIME PLOTTED => 1:01:32 PM

FOR REDUCED PLANS ORIGINAL SCALE IS IN MILLIMETERS 0 20 40 60 80

DGN FILE =>T:\13103\MS\pse\SAS Struc\CCO\SAS CC070\2009-12-02 issued for Submittal\04-0120F1_0400R03.dgn
USERNAME =>llorico

CU 04251 | EA 0120F1