CONTRACT CHANGE ORDER

Change Requested by: Engineer

CCO: 69 **Suppl. No. 0** **Contract No. 04 – 0120F4** **Road** SF-80-13.2/13.9 **FED. AID LOC.:**

To: **AMERICAN BRIDGE/FLUOR ENTERPRISES INC A JOINT VENTURE**

You are directed to make the following changes from the plans and specifications or do the following described work not included in the plans and specifications for this contract. ***NOTE: This change order is not effective until approved by the Engineer.***

Description of work to be done, estimate of quantities and prices to be paid. (Segregate between additional work at contract price, agreed price and force account.) Unless otherwise stated, rates for rental of equipment cover only such time as equipment is actually used and no allowance will be made for idle time. This last percentage shown is the net accumulated increase or decrease from the original quantity in the Engineer's Estimate.

Eliminate the requirement to pressure test the closed U-ribs stiffeners underneath the steel orthotropic bridge deck. Add capping plates to the diagonal stiffener plates at the BC and CD corners of the tower legs as shown in this change order.

Adjustment of Compensation at Lump Sum Price:

Revise Section 10-1.59, "STEEL STRUCTURES," subsection "INSPECTION AND TESTING," subsection "Pressure Test," of the Special Provisions as follows:

Where a pressure test is specified on the plans other than for the OBG U-ribs, ~~such as to verify the integrity of closed rib sections,~~ the air tightness of the enclosed area shall be pressure tested. The air pressure used for the test shall be ~~0.2~~ 3.0 bar. The enclosed area shall be pressurized, and then isolated by closing the fill valve. Valves shall be placed in the ends of the capping plates ~~diaphragm of the rib~~. A calibrated pressure gage with suitable precision shall be monitored over a period of 2 hours. The pressure shall not drop by more than 10%. Compensation for pressure variations due to temperature changes shall be permitted within a range of 5 degrees Centigrade.

~~Five percent of ribs between bolted splices shall be leak tested. If leaks are detected, all of the rib spaces within the panel shall be subjected to leak testing.~~ If leaks are detected, t~~T~~he Contractor shall repair the defects at the Contractor's expense.

The following revised contract plan sheets detail all changes:

Sheets 544R3, 549R3, 554R3, 607R1 and 628R1 (of 1204).

This change order resolves the costs associated with Contractor Request For Information (RFI) Nos. 1058 and 1058R1 with respect to changes listed above.

For this work, the Contractor agrees to perform this work at no additional cost to the Department. This sum constitutes full and complete compensation for furnishing all labor, material, tools and incidentals including all markups by reason of this change.

REGISTERED PROFESSIONAL ENGINEER
BRIAN BOAL
No. 44647
Exp. 3/31/10
CIVIL
STATE OF CALIFORNIA

Adjustment of Compensation at Lump Sum Price.....$0.00

Estimated Cost: **Increase** ☐ **Decrease** ☐ **$0.00**

By reason of this order the time of completion will be adjusted as follows: **0 days**

Submitted by

Signature	**Resident Engineer** Brian Boal for Gary Pursell, Sup.T.E.	**Date** 1/14/09

Approval Recommended by

Signature	**Supervising Bridge Engineer** Richard Morrow, Sup.T.E.	**Date** 1/14/09

Engineer Approval by

Signature	**Supervising Transportation Engineer** Gary Pursell, Sup.T.E.	**Date** 3/10/09

We the undersigned contractor, have given careful consideration to the change proposed and agree, if this proposal is approved, that we will provide all equipment, furnish the materials, except as otherwise be noted above, and perform all services necessary for the work above specified, and will accept as full payment therefor the prices shown above.

NOTE: If you, the contractor, do not sign acceptance of this order, your attention is directed to the requirements of the specifications as to proceeding with the ordered work and filing a written protest within the time therein specified.

Contractor Acceptance by

Signature	(Print name and title) Michael D. Flowers Project Director	**Date** 3-5-09

DIST.	COUNTY	ROUTE	KILOMETER POST TOTAL PROJECT	SHEET NO.	TOTAL SHEETS
04	SF	80	13.2/13.9	544R3	1204

REGISTERED ENGINEER - CIVIL

12-6-04

PLANS APPROVAL DATE

The State of California or its officers or agents shall not be responsible for the accuracy or completeness of electronic copies of this plan sheet.

REGISTERED PROFESSIONAL ENGINEER Marwan N. Nader No. C 054426 Exp. 12/31/09 CIVIL STATE OF CALIFORNIA

T.Y. LIN / MOFFATT & NICHOL
825 BATTERY STREET
SAN FRANCISCO, CA 94111

Caltrans now has a web site! To get to the web site, go to: http://www.dot.ca.gov

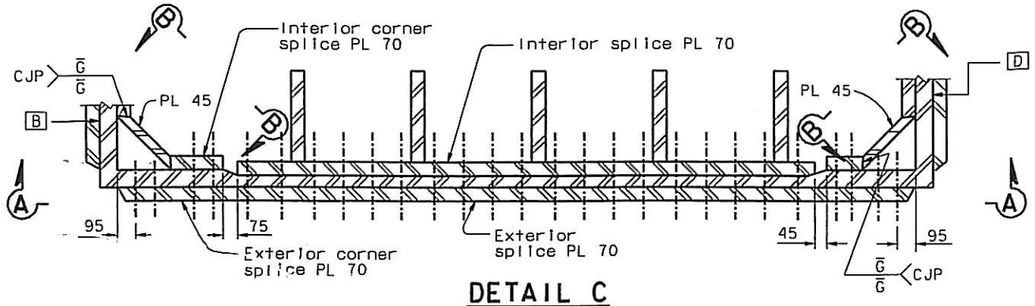

DETAIL C
1:15

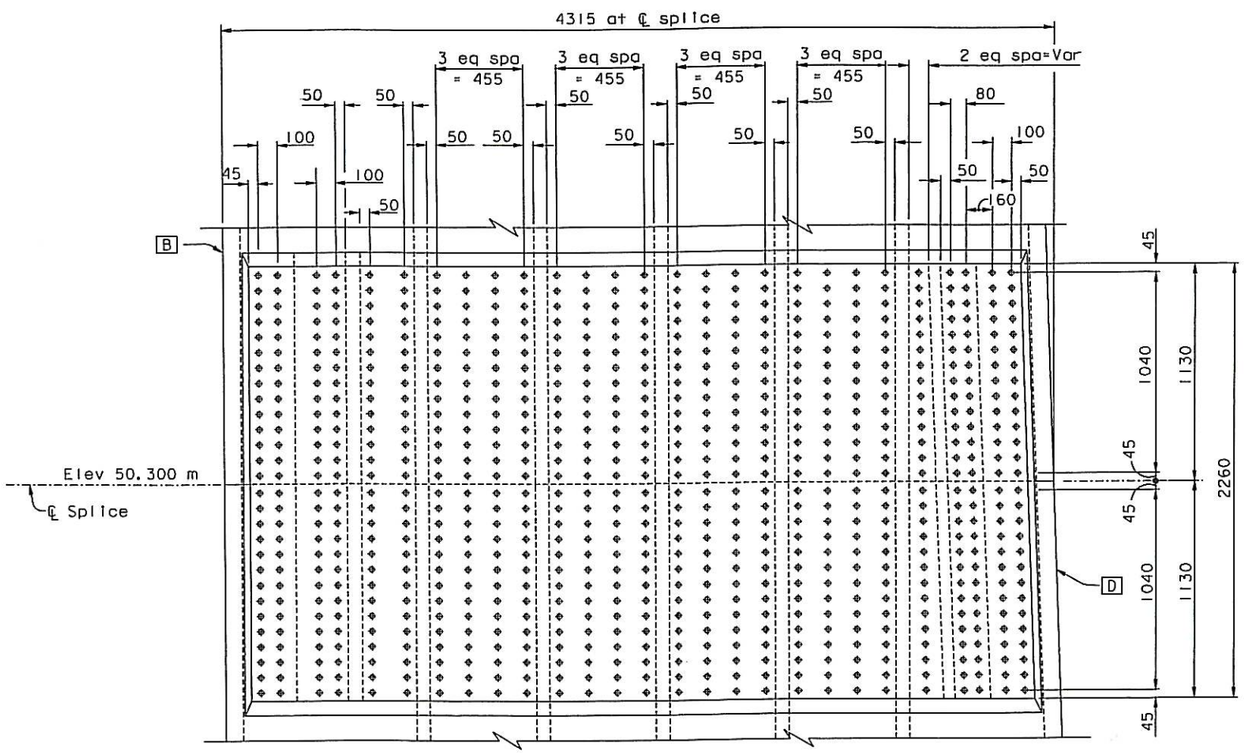

ELEVATION A-A
1:15

TOWER SKIN PLATE C

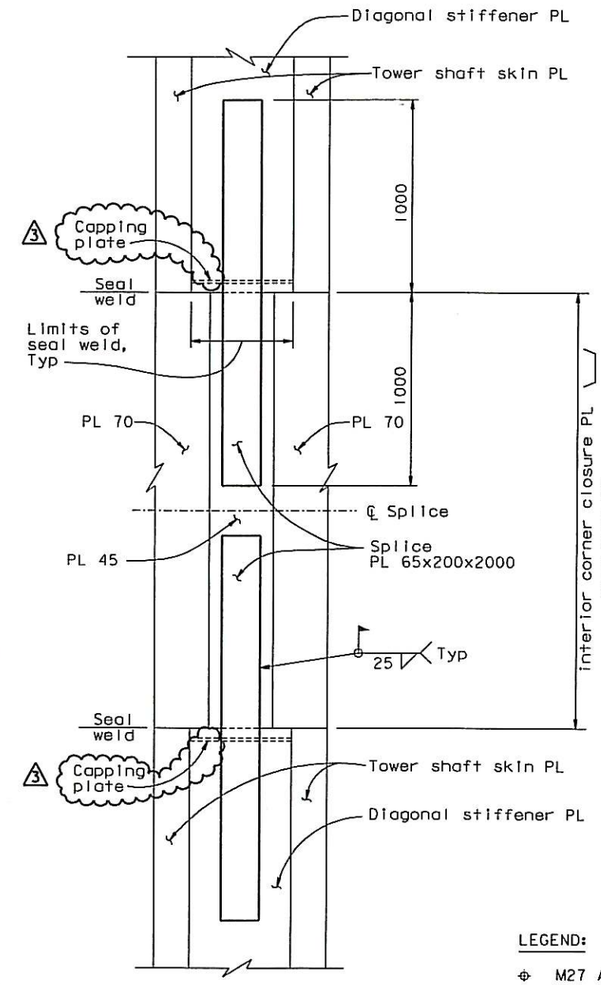

ELEVATION B-B
1:15

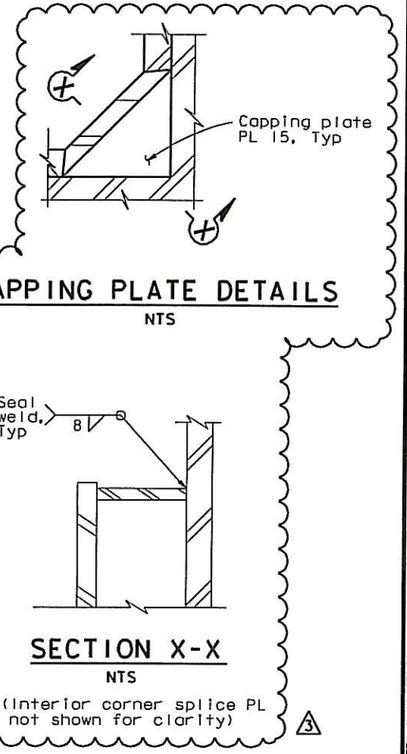

CAPPING PLATE DETAILS
NTS

SECTION X-X
NTS

(Interior corner splice PL not shown for clarity)

LEGEND:

⊕ M27 A490-X HS Bolts

NOTES:

1. The tower splice connections are designed as slip critical connections with class B contact surface (slip coefficient 0.5). The Contractor shall ensure that the flatness requirements are met at the faying surfaces.
2. Elevation view of adjacent skin plate not shown
3. The length of the interior corner splice plate shall be adjusted to ensure the 45 mm minimum bolt edge distance (in the vertical direction).

REQUESTS FOR INFORMATION NOT ADDRESSED IN THIS CCO REMAIN IN FORCE

MARK	DATE	DESCRIPTIONS	BY	CH'D	CCO#
3	10/08/08	U-RIB & TOWER CORNER SEALING	MN	NV	69
2	07/25/08	TOWER DOUBLER PLATE & SPLICE CORNER DETAILS	MN	NV	62
1	06/23/06	SPLICE PLATES PER ISM	MN	NV	21

REVISIONS

CONTRACT CHANGE ORDER NO. 69
SHEET 2 OF 6

ALL DIMENSIONS ARE IN MILLIMETERS UNLESS OTHERWISE SHOWN

SAN FRANCISCO OAKLAND BAY BRIDGE
EAST SPAN SEISMIC SAFETY PROJECT
SELF-ANCHORED SUSPENSION BRIDGE
(SUPERSTRUCTURE & TOWER)

TOWER SPLICE DETAILS NO. 5

R. Valizadeh/V. Toon/Y.L./W.L./F.C.
DESIGN OVERSIGHT
SIGN OFF DATE 10/08/08

DESIGN	BY M. Nader	CHECKED M. Gulyas	
DETAILS	BY J. Lopez	CHECKED N. Vo	
QUANTITIES	BY L. Rus	CHECKED Y. Zhang	

PREPARED FOR THE STATE OF CALIFORNIA DEPARTMENT OF TRANSPORTATION

R. Manzanarez
PROJECT ENGINEER

BRIDGE NO. 34-0006L/R
KILOMETER POST 13.2/13.9

Rev. Date: 5-18-98

ORIGINAL SCALE IN MILLIMETERS FOR REDUCED PLANS 0 10 20 30 40 50 60 70 80 90 100

CU 04
EA 0120F1

DISREGARD PRINTS BEARING EARLIER REVISION DATES

REVISION DATES (PRELIMINARY STAGE ONLY) 08/02/99 05/31/01 04/08/02 07/01/02 12/19/02

SHEET 127R3 OF

FILE => I:\bb\04-012001\sas\contract plans and cco\cco\in progress\cco#69\update 10-08-08\dgn\aetsp05.dgn

100 % PS&E

USERNAME => dwinrow DATE PLOTTED => 08 OCT 2008 TIME PLOTTED => 11:27:00

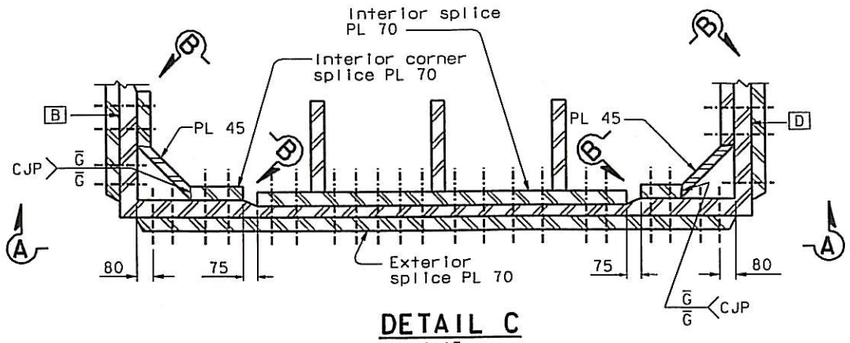

DETAIL C
1:15

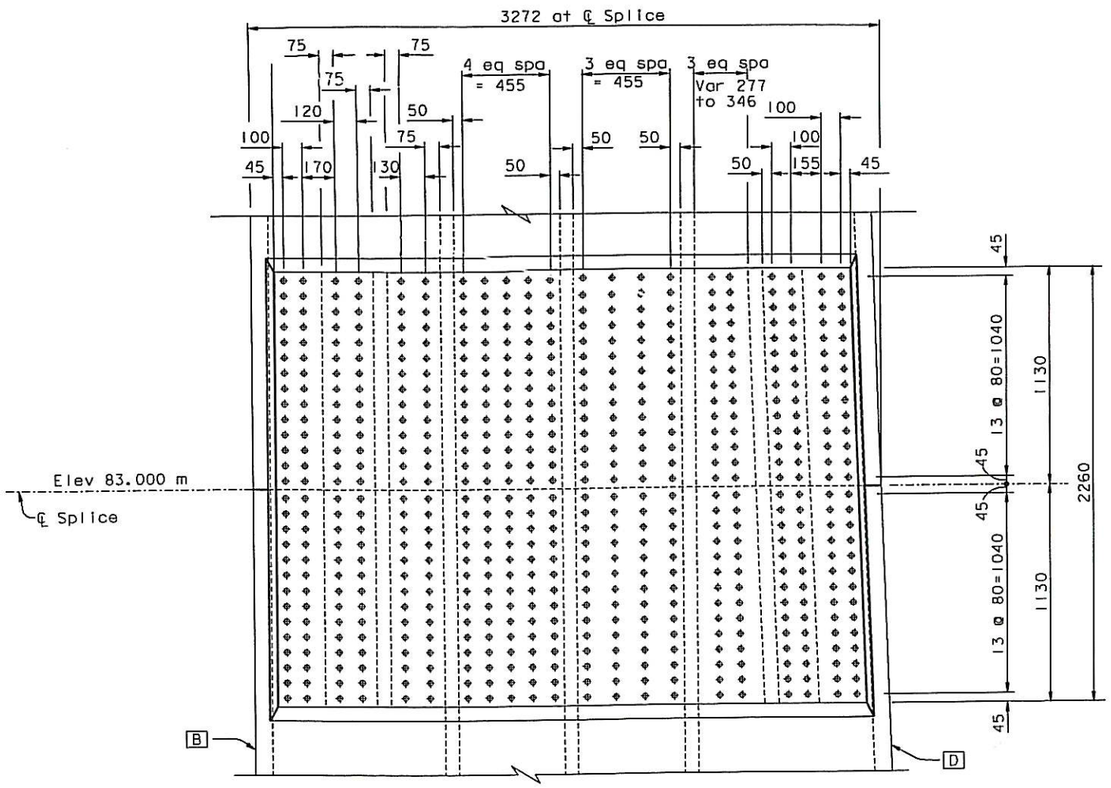

ELEVATION A-A
1:15

TOWER SKIN PLATE C

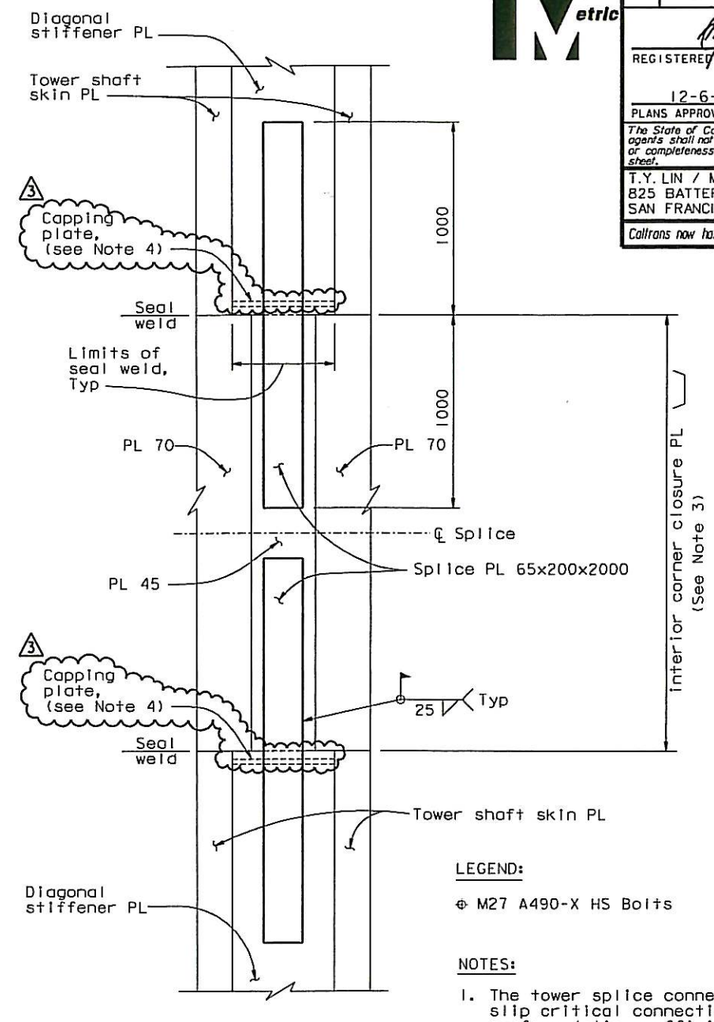

ELEVATION B-B
1:15

LEGEND:

⊕ M27 A490-X HS Bolts

NOTES:

1. The tower splice connections are designed as slip critical connections with class B contact surface (slip coefficient 0.5). The Contractor shall ensure that the flatness requirements at the faying surfaces and the geometry control are met.
2. Elevation view of adjacent skin plate not shown for clarity.
3. The length of the interior corner splice plate shall be adjusted to ensure the 45 mm minimum bolt edge distance (in the vertical direction).
4. (3) For Capping Plate Details, see "Tower Splice Details No.5" sheet.

DIST.	COUNTY	ROUTE	KILOMETER POST TOTAL PROJECT	SHEET NO.	TOTAL SHEETS
04	SF	80	13.2/13.9	549R3	1204

REGISTERED ENGINEER - CIVIL

12-6-04
PLANS APPROVAL DATE

REGISTERED PROFESSIONAL ENGINEER Marwan N. Nader No. C 054426 Exp. 12/31/09 CIVIL STATE OF CALIFORNIA

The State of California or its officers or agents shall not be responsible for the accuracy or completeness of electronic copies of this plan sheet.

T.Y. LIN / MOFFATT & NICHOL
825 BATTERY STREET
SAN FRANCISCO, CA 94111

Caltrans now has a web site! To get to the web site, go to: http://www.dot.ca.gov

REQUESTS FOR INFORMATION NOT ADDRESSED IN THIS CCO REMAIN IN FORCE

MARK	DATE	DESCRIPTIONS	BY	CH'D	CCO#
3	10/03/08	U-RIB & TOWER CORNER SEALING	MN	NV	69
2	07/25/08	TOWER DOUBLER PLATE & SPLICE CORNER DETAILS	MN	NV	62
1	06/23/06	SPLICE PLATES PER ISM	MN	NV	21

REVISIONS

CONTRACT CHANGE ORDER NO. 69
SHEET 3 OF 6

ALL DIMENSIONS ARE IN MILLIMETERS UNLESS OTHERWISE SHOWN

SAN FRANCISCO OAKLAND BAY BRIDGE
EAST SPAN SEISMIC SAFETY PROJECT
SELF-ANCHORED SUSPENSION BRIDGE
(SUPERSTRUCTURE & TOWER)

TOWER SPLICE DETAILS NO. 10

R. Valizadeh/V. Toan/Y.L./W.L./F.C.
DESIGN OVERSIGHT
Reza Valizadeh / Vong Toan / Y. Liu
SIGN OFF DATE 10/03/08

	BY	CHECKED
DESIGN	M. Nader	N. Vo
DETAILS	C. Choi	N. Vo
QUANTITIES	C. Choi	N. Vo

PREPARED FOR THE STATE OF CALIFORNIA DEPARTMENT OF TRANSPORTATION

R. Manzanarez
PROJECT ENGINEER

BRIDGE NO. 34-0006L/R
KILOMETER POST 13.2/13.9

CU 04
EA 0120F1

DISREGARD PRINTS BEARING EARLIER REVISION DATES

REVISION DATES (PRELIMINARY STAGE ONLY) 08/02/99 05/31/01 04/08/02 07/01/02 12/19/02

SHEET 132R3 OF

Rev. Date: 5-18-98

ORIGINAL SCALE IN MILLIMETERS FOR REDUCED PLANS 0 10 20 30 40 50 60 70 80 90 100

FILE => I:\bb\04-012001\sas\contract plans and cco\cco\in progress\cco#69\original 10-03-08\dgn\oetsp10.dgn

100 % PS&E

USERNAME => vignatovsk DATE PLOTTED => 03 OCT 2008 TIME PLOTTED => 11:25:37

DIST.	COUNTY	ROUTE	KILOMETER POST TOTAL PROJECT	SHEET NO.	TOTAL SHEETS
04	SF	80	13.2/13.9	554R3	1204

REGISTERED ENGINEER - CIVIL

12-6-04
PLANS APPROVAL DATE

REGISTERED PROFESSIONAL ENGINEER Marwan N. Nader No. C 054426 Exp. 12/31/09 CIVIL STATE OF CALIFORNIA

The State of California or its officers or agents shall not be responsible for the accuracy or completeness of electronic copies of this plan sheet.

T.Y. LIN / MOFFATT & NICHOL
825 BATTERY STREET
SAN FRANCISCO, CA 94111

Caltrans now has a web site! To get to the web site, go to: http://www.dot.ca.gov

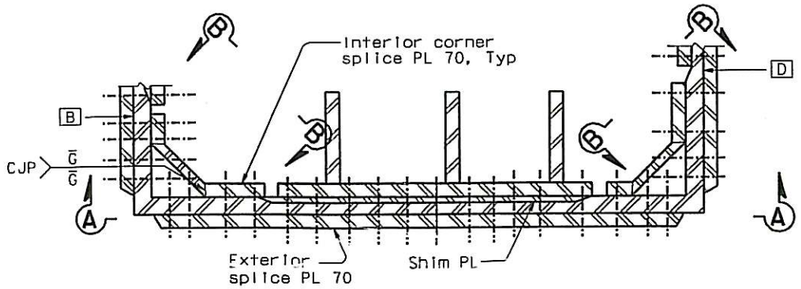

DETAIL C
1:15

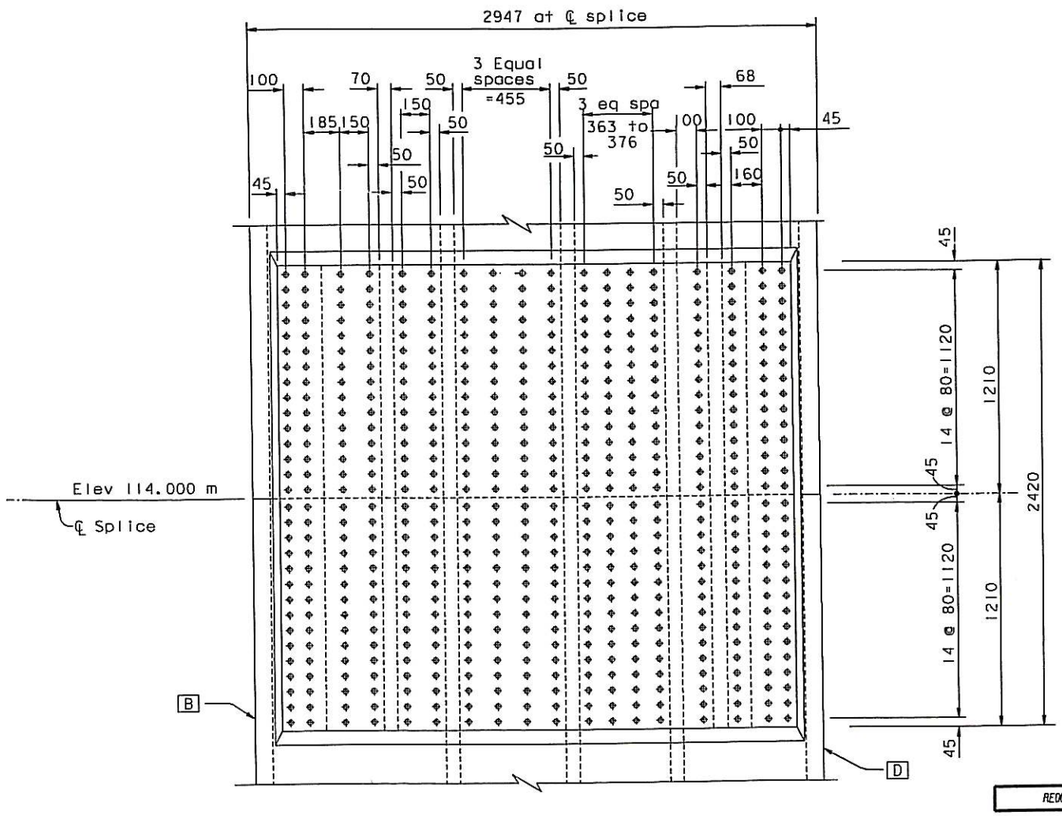

ELEVATION A-A
1:15

TOWER SKIN PLATE C

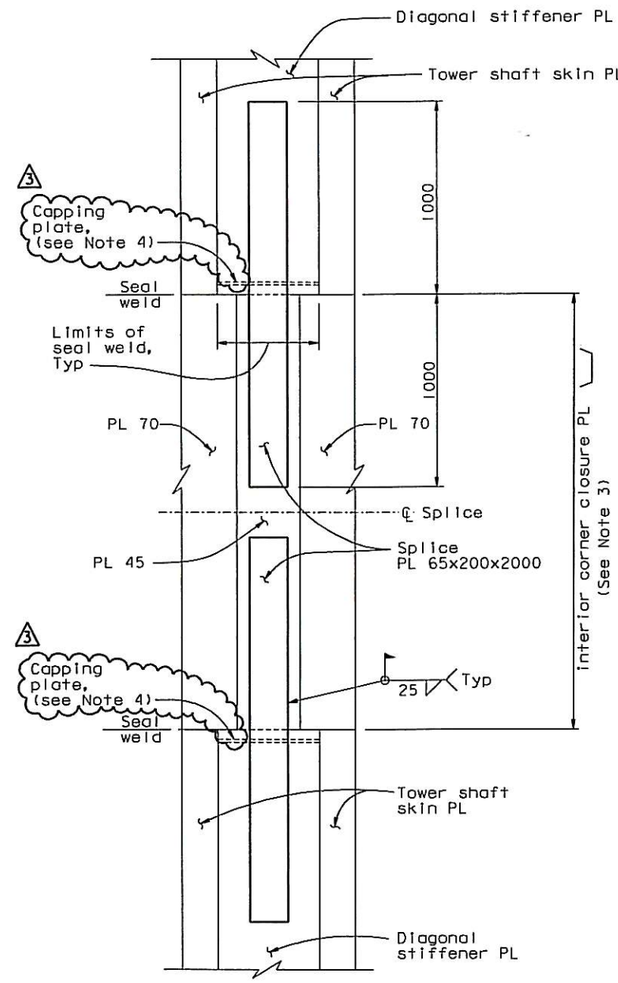

ELEVATION B-B
1:15

LEGEND:

⊕ M27 A490-X HS Bolts

NOTES:

1. The tower splice connections are designed as slip critical connections with class B contact surface (slip coefficient 0.5). The Contractor shall ensure that the flatness requirements at the faying surfaces and the geometry control are met.
2. Elevation view of adjacent skin plate not shown for clarity.
3. The length of the interior corner splice plate shall be adjusted to ensure the 45 mm minimum bolt edge distance (in the vertical direction).
4. (3) For Capping Plate Details, see "Tower Splice Details No.5" sheet.

MARK	DATE	DESCRIPTIONS	BY	CH'D	CCO#
3	10/03/08	U-RIB & TOWER CORNER SEALING	MN	NV	69
2	07/25/08	TOWER DOUBLER PLATE & SPLICE CORNER DETAILS	MN	NV	62
1	06/23/06	SPLICE PLATES PER ISM	MN	NV	21

REQUESTS FOR INFORMATION NOT ADDRESSED IN THIS CCO REMAIN IN FORCE

REVISIONS

CONTRACT CHANGE ORDER NO. 69
SHEET 4 OF 6

ALL DIMENSIONS ARE IN MILLIMETERS UNLESS OTHERWISE SHOWN

100 % PS&E

USERNAME => vignotavsi DATE PLOTTED => 03 OCT 2008 TIME PLOTTED => 11:26:28

R. Vallizadeh/V. Toon/Y.L./W.L./F.C.
DESIGN OVERSIGHT
SIGN OFF DATE 10/03/08

	BY	CHECKED
DESIGN	M. Nader	N. Vo
DETAILS	J. Lopez	N. Vo
QUANTITIES	J. Lopez	N. Vo

PREPARED FOR THE STATE OF CALIFORNIA DEPARTMENT OF TRANSPORTATION

R. Manzanarez
PROJECT ENGINEER

BRIDGE NO. 34-0006L/R
KILOMETER POST 13.2/13.9

CU 04
EA 0120F1

SAN FRANCISCO OAKLAND BAY BRIDGE
EAST SPAN SEISMIC SAFETY PROJECT
SELF-ANCHORED SUSPENSION BRIDGE
(SUPERSTRUCTURE & TOWER)

TOWER SPLICE DETAILS NO. 15

DISREGARD PRINTS BEARING EARLIER REVISION DATES → 08/28/03 05/24/02 04/26/02 11/20/02 12/19/02

SHEET 137R3 OF

Rev. Date: 5-18-98

ORIGINAL SCALE IN MILLIMETERS FOR REDUCED PLANS 0 10 20 30 40 50 60 70 80 90 100

FILE => I:\bb\04-01200\sas\contract plans and cco\cco\in progress\cco#69\original 10-03-08\dgn\detspl5.dgn

DIST.	COUNTY	ROUTE	KILOMETER POST TOTAL PROJECT	SHEET NO.	TOTAL SHEETS
04	SF	80	13.2/13.9	607R1	1204

REGISTERED ENGINEER - CIVIL

12-6-04
PLANS APPROVAL DATE

REGISTERED PROFESSIONAL ENGINEER Marwan N. Nader No. C 054426 Exp. 12/31/09 CIVIL STATE OF CALIFORNIA

The State of California or its officers or agents shall not be responsible for the accuracy or completeness of electronic copies of this plan sheet.

T.Y. LIN / MOFFATT & NICHOL
825 BATTERY STREET
SAN FRANCISCO, CA 94111

Caltrans now has a web site! To get to the web site, go to: http://www.dot.ca.gov

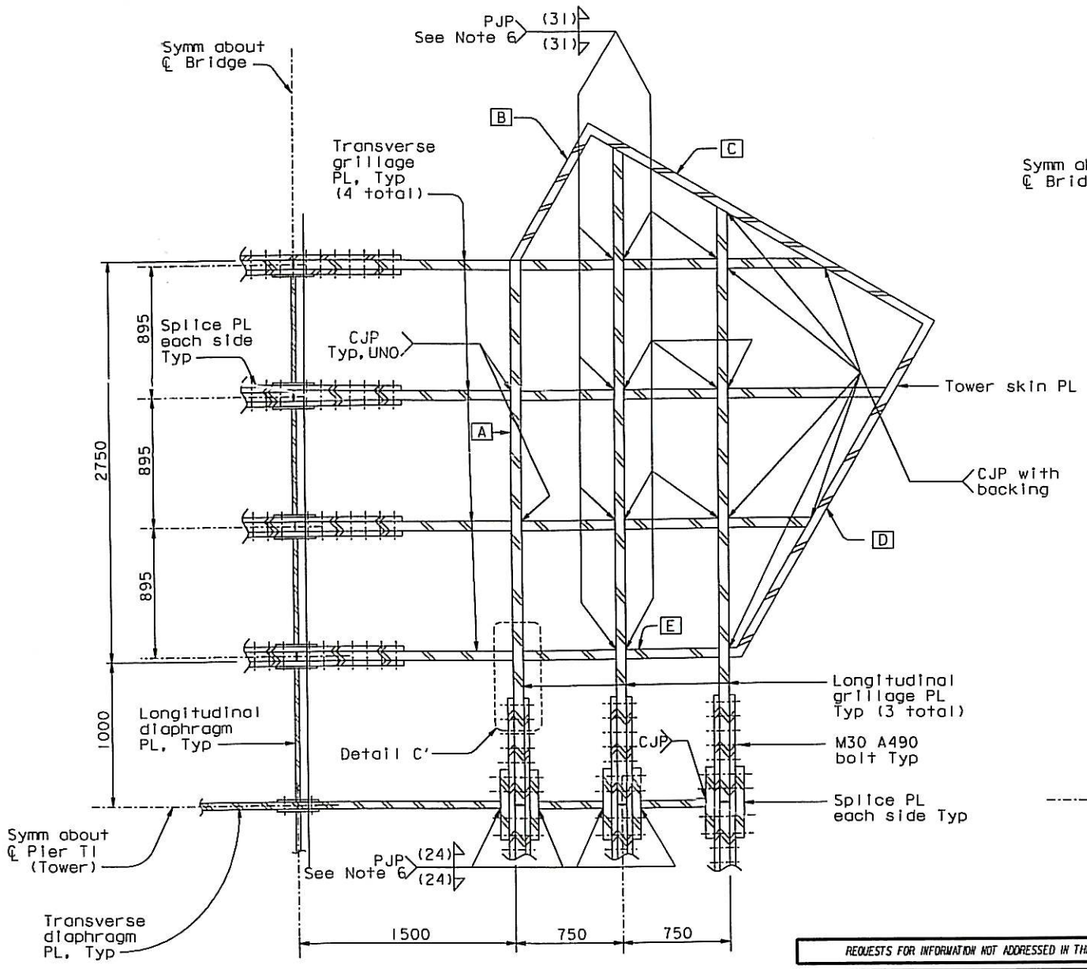

DETAIL C (Between Elevation 149.850 m & 147.500 m, see Note 3)
1:20

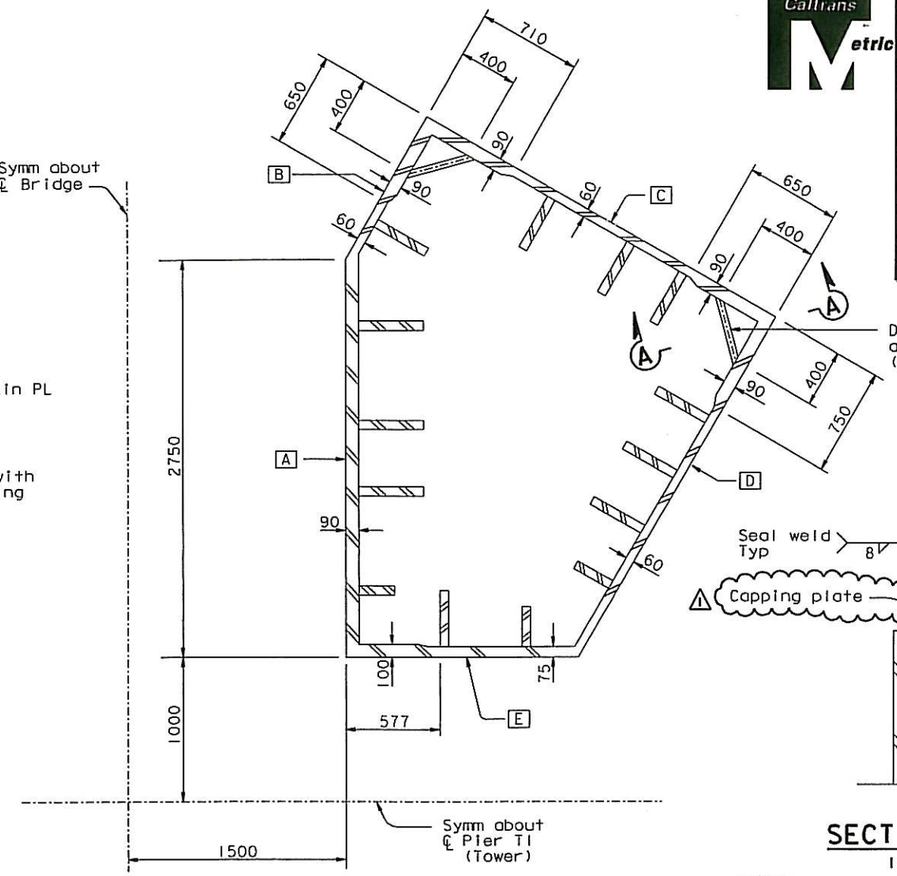

DETAIL D (Tower Shaft Between Elev 144.420 m & 144.000 m)
1:20

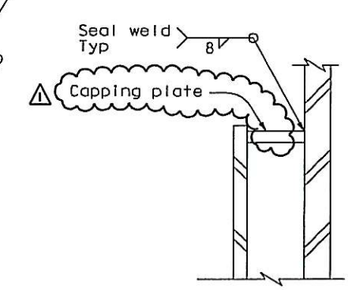

SECTION A-A
1:10

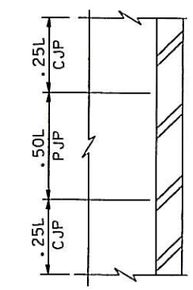

DETAIL A
NTS

NOTES:

1. See schedule A in conjunction with Detail D for tower PL and stiffener size between elevations 144.000 m and 150.900 m.
2. 1 End of diagonal stiffener shall be sealed with a capping plate with no copes. This detail also applies at the ends of every lift where bolted splices occur at elevations 50.30 m, 83.00 m and 114.00 m. See "Tower Splice Details No.5, No.10 and No.15" sheets.
3. Details at elevation 147.500 m are not shown for clarity. For details at elevation 147.500 m, see Section L-L and Section M-M on "Tower Saddle Grillage Details No.6" sheet.
4. For stiffener size, see "Tower Splice Details No.19" sheet.
5. For location of stiffeners between elevations 144.000 m and 147.500 m, the stiffeners shall be extended straight using the layout shown on "Tower Shaft Details No.3" through "Tower Shaft Details No.7" sheets.
6. The top and bottom 25% of the weld length shall be CJP (see Detail A).

REQUESTS FOR INFORMATION NOT ADDRESSED IN THIS CCO REMAIN IN FORCE

MARK	DATE	DESCRIPTIONS	BY	CH'D	CCO#
1	10/08/08	U-RIB & TOWER CORNER SEALING	MN	NV	69

REVISIONS

CONTRACT CHANGE ORDER NO. 69
SHEET 5 OF 6

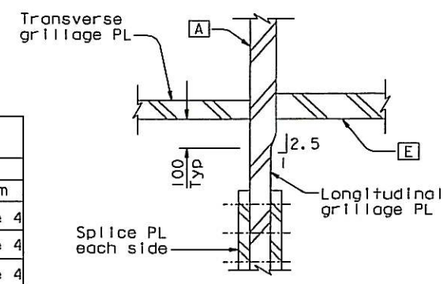

DETAIL C'
1:10

SCHEDULE A
TOWER PL & STIFFENER SIZES BETWEEN ELEVATION 144.000 & 150.900 m (see Note 1)

ELEVATION (m)	A		B		C		D		E	
	Thick mm	Stiff mm	Thick mm	Stiff mm	Thick mm	Stiff mm	Thick mm	Stiff mm	Thick mm	Stiff mm
144.000 to 144.420	Detail D	see Note 4	Detail D	see Note 4	Detail D	see Note 4	Detail D	see Note 4	Detail D	see Note 4
144.420 to 145.070	90	see Note 4	90	see Note 4	90	see Note 4	90	see Note 4	90	see Note 4
145.070 to 147.500	90	see Note 4	90	see Note 4	90	see Note 4	90	see Note 4	90	see Note 4
147.500 to 148.500**	90	-	90	-	90	-	90	-	90	-
148.500 to 150.900	70	-	60	-	60	-	60	-	65	-

** See detail C' for transition in thickness between tower shaft skin PL A and longitudinal grillage PL.

ALL DIMENSIONS ARE IN MILLIMETERS UNLESS OTHERWISE SHOWN

100 % PS&E

SAN FRANCISCO OAKLAND BAY BRIDGE
EAST SPAN SEISMIC SAFETY PROJECT
SELF-ANCHORED SUSPENSION BRIDGE
(SUPERSTRUCTURE & TOWER)

TOWER SADDLE GRILLAGE DETAILS NO.3

R. Vallzadeh/V. Toan/Y.L./W.L./F.C.
DESIGN OVERSIGHT
Roya Vallzadeh / Vong Toan / Y. Liu
SIGN OFF DATE 10/08/08

Rev. Date: 5-18-98

	BY	CHECKED
DESIGN	M. Nader	R. Mayrbaurl
DETAILS	R. Kanitkar	R. Mayrbaurl
QUANTITIES	R. Kanitkar	Y. Zhang

PREPARED FOR THE STATE OF CALIFORNIA DEPARTMENT OF TRANSPORTATION

R. Manzanarez
PROJECT ENGINEER

BRIDGE NO. 34-0006L/R
KILOMETER POST 13.2/13.9

CU 04
EA 0120F1

ORIGINAL SCALE IN MILLIMETERS FOR REDUCED PLANS 0 10 20 30 40 50 60 70 80 90 100

DISREGARD PRINTS BEARING EARLIER REVISION DATES
REVISION DATES (PRELIMINARY STAGE ONLY)
01/15/99 05/17/99 06/28/99 05/17/01 01/08/02 12/04/02 12/04/02 11/13/05

SHEET 190R1 OF

FILE => L:\BB\04-012001\SAS\Contract Plans and CCO\CCO\In Progress\CCO#69\Update 10-08-08\DGN\aacsg03.dgn

USERNAME => dwinrow DATE PLOTTED => 08 OCT 2008 TIME PLOTTED => 11:00:20

DIST.	COUNTY	ROUTE	KILOMETER POST TOTAL PROJECT	SHEET NO.	TOTAL SHEETS
04	SF	80	13.2/13.9	628R1	1204

Caltrans Metric

George Baker
REGISTERED ENGINEER - CIVIL
12-6-04
PLANS APPROVAL DATE

REGISTERED PROFESSIONAL ENGINEER George S. Baker No. C57112 Exp. 12/31/05 CIVIL STATE OF CALIFORNIA

The State of California or its officers or agents shall not be responsible for the accuracy or completeness of electronic copies of this plan sheet.

T.Y. LIN / MOFFATT & NICHOL
825 BATTERY STREET
SAN FRANCISCO, CA 94111

Caltrans now has a web site! To get to the web site, go to: http://www.dot.ca.gov

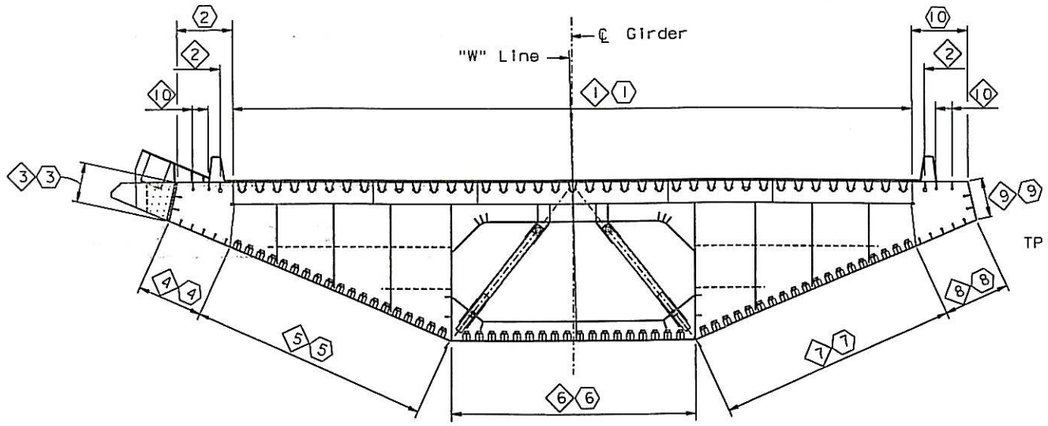

("W" LINE SECTION TYPE 1A SHOWN)

SECTION AT FLOORBEAM

1:100

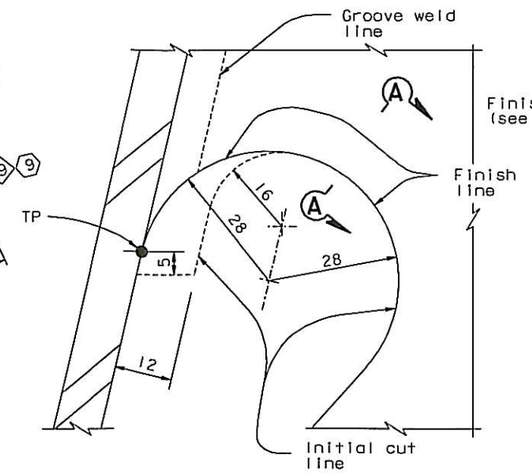

DETAIL A

NTS

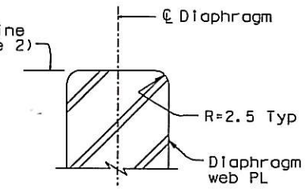

GRINDING DETAIL SECTION A-A

NTS

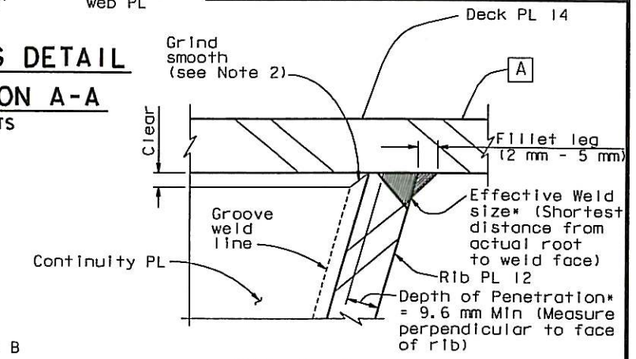

DETAIL B (Typical)

NTS

*NOTE: Depth of Penetration & Effective Weld size shall be measured on macroetch specimens without the 3 mm deduction per D1.5, Sections 2.3.1.3 and 2.3.4.

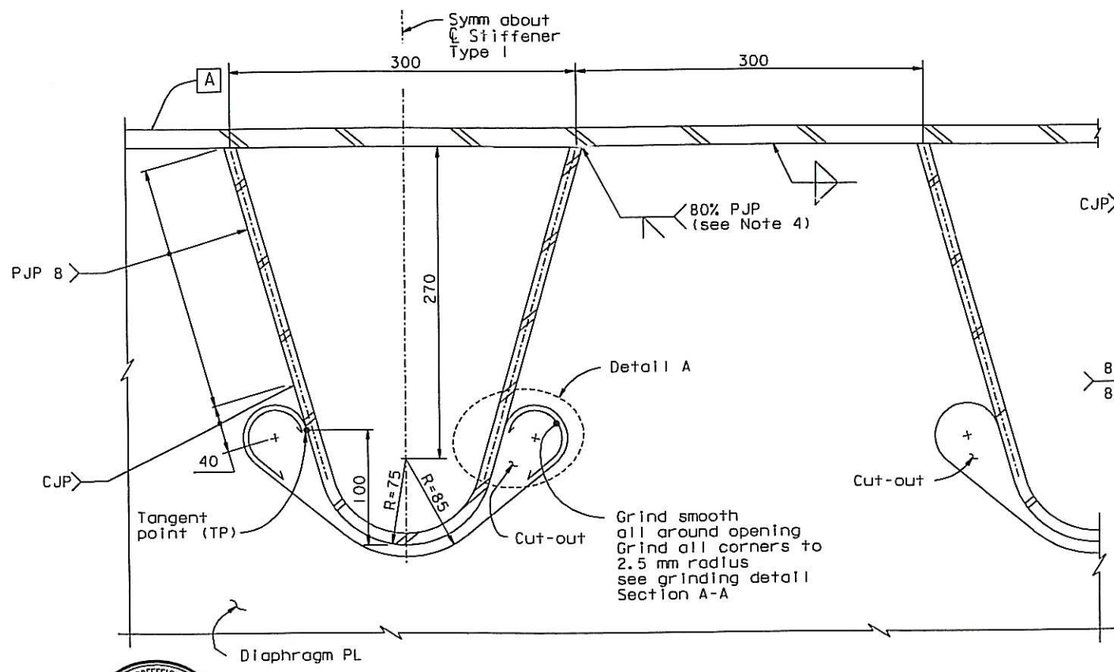

DETAIL TYPE 1

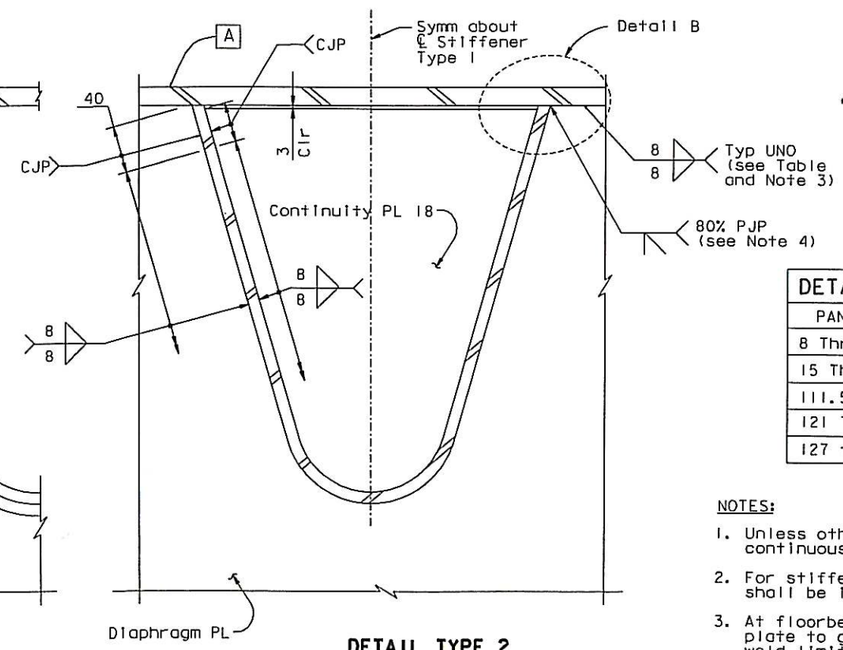

DETAIL TYPE 2

⟨1⟩ STIFFENER DETAIL AT FLOORBEAM (See Table)

1:2.5

DETAIL TYPE LOCATION TABLE		
PANEL POINT	DETAIL TYPE	WELD
8 Thru 14.5	2	As Shown
15 Thru 111	1	As Shown
111.5 Thru 120.5	2	As Shown
121 Thru 126.5	2	See Note 3
127 to Hinge A	2	As Shown

NOTES:

1. Unless otherwise indicated, stiffener type 1 is continuous through floorbeam diaphragm plate.
2. For stiffener type 1, finish surface of cut-out shall be in accordance with ANSI 500 roughness.
3. At floorbeam cable opening, weld of diaphragm plate to girder Plate A shall be CJP. For CJP weld limits, see "Floorbeam At East Transition" sheets.
4. Closed ribs shall be sealed with diaphragm. See Diaphragm Detail on "Typical Girder Details No. 11" sheet.

100 % PS&E

REGISTERED PROFESSIONAL ENGINEER Daniel J. Turner No. C 65033 Exp. 06/30/09 CIVIL STATE OF CALIFORNIA

FOR REVISIONS ONLY

CONTRACT CHANGE ORDER NO. 69
SHEET 6 OF 6

REQUESTS FOR INFORMATION NOT ADDRESSED IN THIS CCO REMAIN IN FORCE

ALL DIMENSIONS ARE IN MILLIMETERS UNLESS OTHERWISE SHOWN

R. Vallizadeh/V. Toan/Y.L./W.L./F.C.
DESIGN OVERSIGHT
SIGN OFF DATE 10/03/08

MARK	DATE	DESCRIPTIONS	BY	CH'D	CCO#
1	10/03/08	U-RIB & TOWER CORNER SEALING	DT	NV	69

REVISIONS

DESIGN	BY G. Baker	CHECKED	P. Ritchie
DETAILS	BY S. Camo	CHECKED	T. McMeans
QUANTITIES	BY G. Baker	CHECKED	M. Roberts

PREPARED FOR THE STATE OF CALIFORNIA DEPARTMENT OF TRANSPORTATION

R. Manzanarez
PROJECT ENGINEER

BRIDGE NO. 34-0006L/R
KILOMETER POST 13.2/13.9

SAN FRANCISCO OAKLAND BAY BRIDGE
EAST SPAN SEISMIC SAFETY PROJECT
SELF-ANCHORED SUSPENSION BRIDGE
(SUPERSTRUCTURE & TOWER)

TYPICAL GIRDER DETAILS NO. 4

Rev. Date: 5-18-98

ORIGINAL SCALE IN MILLIMETERS FOR REDUCED PLANS 0 10 20 30 40 50 60 70 80 90 100

CU 04
EA 0120F1

DISREGARD PRINTS BEARING EARLIER REVISION DATES

REVISION DATES (PRELIMINARY STAGE ONLY) 01/25/99 05/31/99 06/28/99 05/31/01 04/26/02 07/26/02 12/13/02

SHEET 211R1 OF

FILE => I:\bb\04-012001\sas\contract plans and cco\cco\cco*69\update 10-08-08\dgn\aggdkd03.dgn

USERNAME => vignatovs DATE PLOTTED => 07 NOV 2008 TIME PLOTTED => 10:17:28