DIST.	COUNTY	ROUTE	KILOMETER POST TOTAL PROJECT	SHEET NO.	TOTAL SHEETS
04	SF	80	13.2/13.9	600S3R1	1204

Caltrans Metric

REGISTERED ENGINEER - CIVIL

06-20-08
PLANS APPROVAL DATE

REGISTERED PROFESSIONAL ENGINEER James P.Duxbury No. C 64677 Exp. 06/30/09 CIVIL STATE OF CALIFORNIA

The State of California or its officers or agents shall not be responsible for the accuracy or completeness of electronic copies of this plan sheet.

T.Y. LIN / MOFFATT & NICHOL
825 BATTERY STREET
SAN FRANCISCO, CA 94111

Caltrans now has a web site! To get to the web site, go to: http://www.dot.ca.gov

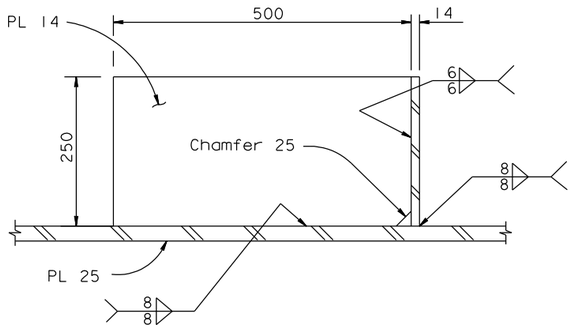

SECTION A-A
1:5

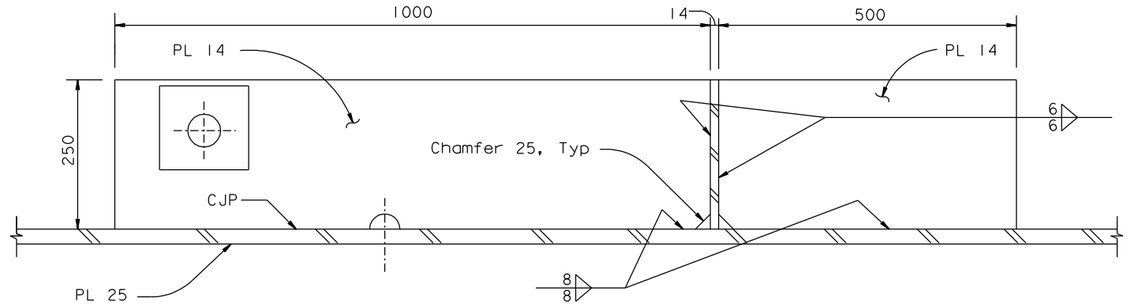

SECTION B-B
1:5

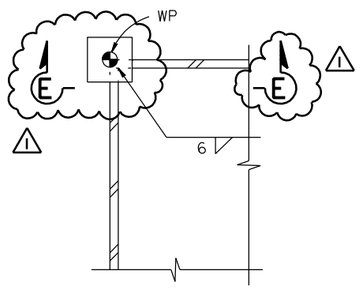

DETAIL A (Detail A' similar)
1:5
(Hole for lift pin not shown for clarity)

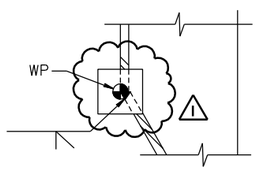

DETAIL C
1:5

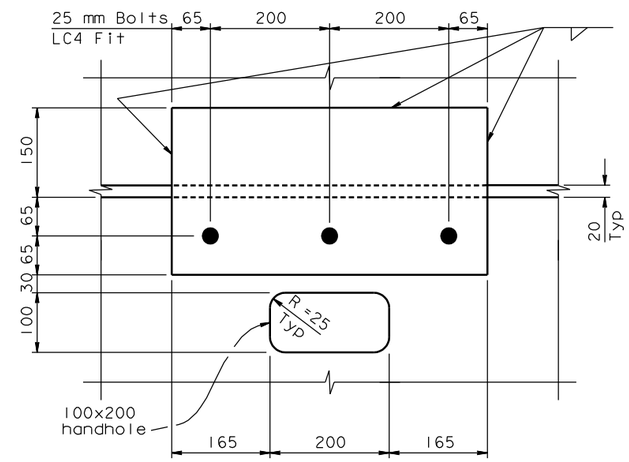

SPLICE PLATE DETAIL
1:5

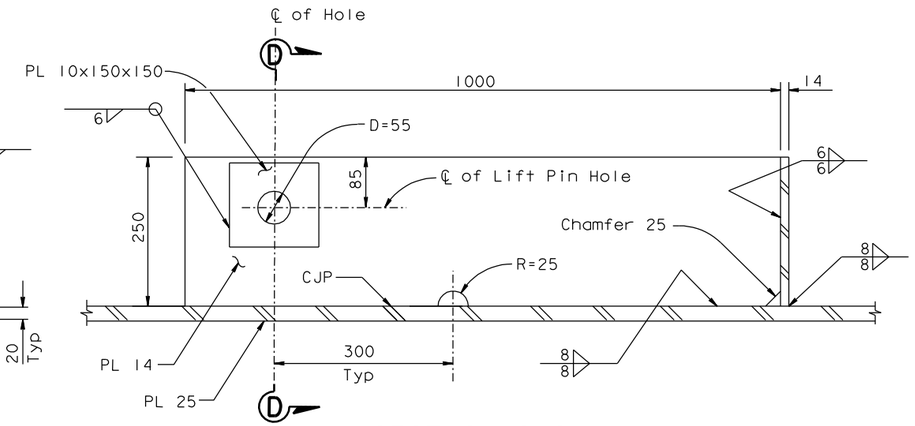

SECTION C-C
1:5

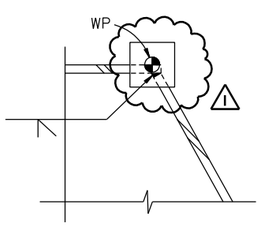

DETAIL B
1:5

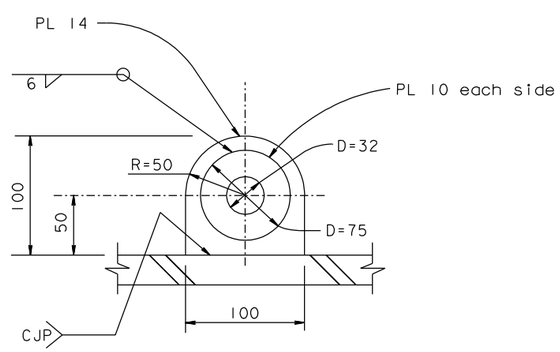

PADEYE DETAIL
1:2.5

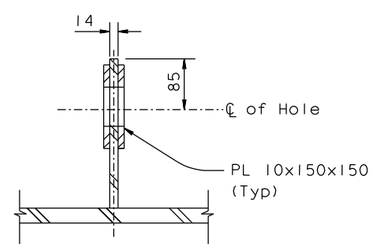

SECTION D-D
1:5

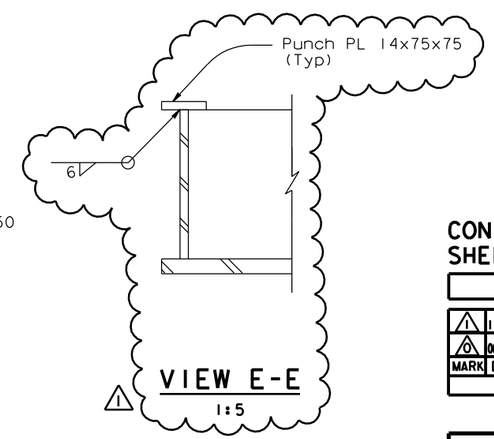

VIEW E-E
1:5

ALL DIMENSIONS ARE IN MILLIMETERS UNLESS OTHERWISE SHOWN

CONTRACT CHANGE ORDER NO. ____
SHEET ___ OF ___

REQUESTS FOR INFORMATION NOT ADDRESSED IN THIS CCO REMAIN IN FORCE

MARK	DATE	DESCRIPTIONS	BY	CH'D	CCO#
1	11/07/08	TOWER BASE PLATE TEMPLATE	JD	MN	67
0	06/20/08	TOWER BASE PLATE TEMPLATE	JD	MN	67

REVISIONS

R. Valizadeh/V. Toan/Y.L./W.L./F.C.
DESIGN OVERSIGHT
SIGN OFF DATE 11/07/08

Rev. Date: 5-18-98

DESIGN	BY J. Duxbury	CHECKED M. Nader	
DETAILS	BY J. Duxbury	CHECKED M. Nader	
QUANTITIES	BY J. Duxbury	CHECKED M. Nader	

ORIGINAL SCALE IN MILLIMETERS FOR REDUCED PLANS 0 10 20 30 40 50 60 70 80 90 100

PREPARED FOR THE STATE OF CALIFORNIA DEPARTMENT OF TRANSPORTATION

R. Manzanarez
PROJECT ENGINEER

CU 04
EA 0120F1

BRIDGE NO. 34-0006L/R
KILOMETER POST 13.2/13.9

DISREGARD PRINTS BEARING EARLIER REVISION DATES 05/23/08

REVISION DATES (PRELIMINARY STAGE ONLY) SHEET 183S3R1 OF

SAN FRANCISCO OAKLAND BAY BRIDGE
EAST SPAN SEISMIC SAFETY PROJECT
SELF-ANCHORED SUSPENSION BRIDGE
(SUPERSTRUCTURE & TOWER)

TOWER ANCHORAGE DETAILS NO. 11

FILE => I:\bb\04-012001\sas\contract plans and cco\cco\cco#67\revision 11-07-08\dgn\towanc03.dgn

USERNAME => dwinrow DATE PLOTTED => 07 NOV 2008 TIME PLOTTED => 14:48:22