DIST.	COUNTY	ROUTE	KILOMETER POST TOTAL PROJECT	SHEET NO.	TOTAL SHEETS
04	SF	80	13.2/13.9	825R2	1204

REGISTERED ENGINEER - CIVIL

12-6-04
PLANS APPROVAL DATE

The State of California or its officers or agents shall not be responsible for the accuracy or completeness of electronic copies of this plan sheet.

REGISTERED PROFESSIONAL ENGINEER Tien Hung Ho No. C 43990 Exp. 6/30/09 CIVIL STATE OF CALIFORNIA

T.Y. LIN / MOFFATT & NICHOL
825 BATTERY STREET
SAN FRANCISCO, CA 94111

Caltrans now has a web site! To get to the web site, go to: http://www.dot.ca.gov

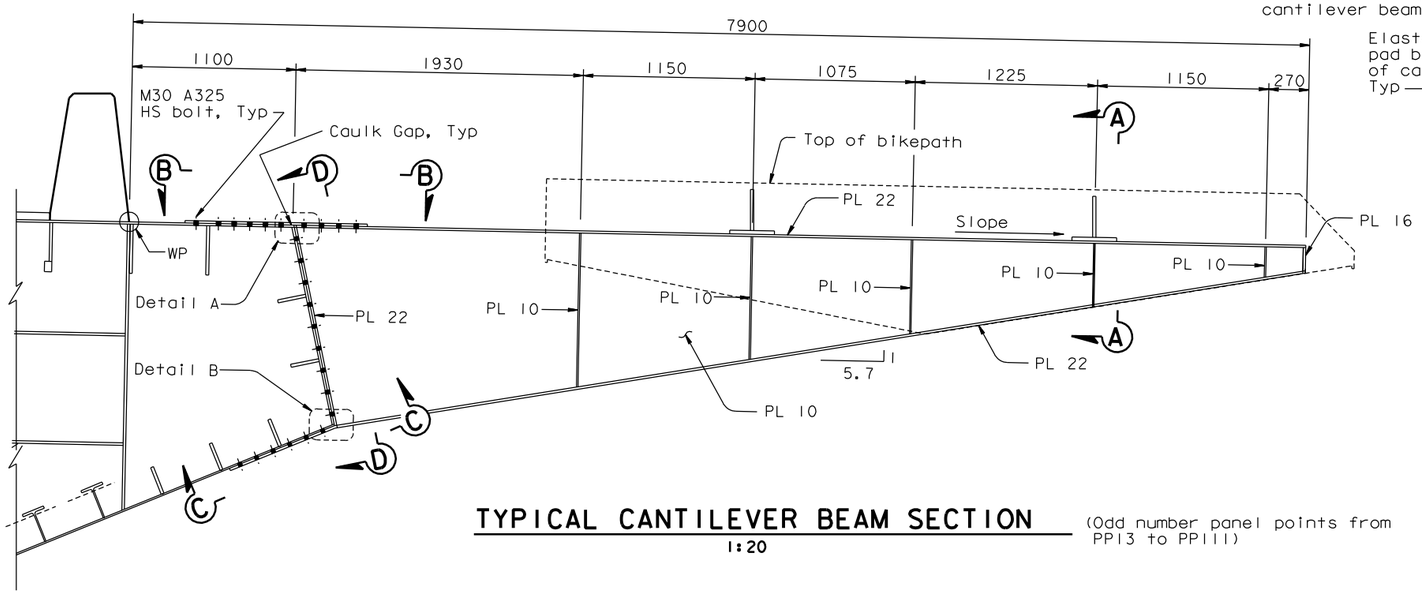

TYPICAL CANTILEVER BEAM SECTION
1:20

(Odd number panel points from PP113 to PP111)

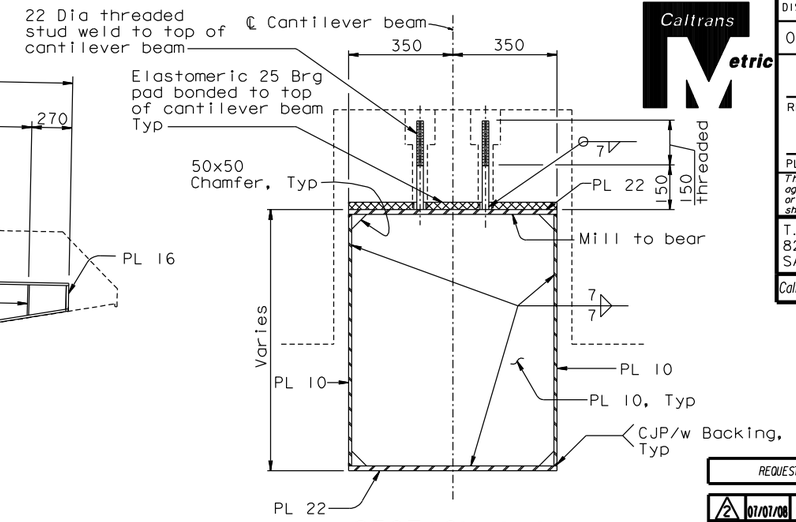

SECTION A-A
1:10

REQUESTS FOR INFORMATION NOT ADDRESSED IN THIS CCO REMAIN IN FORCE

MARK	DATE	DESCRIPTIONS	BY	CH'D	CCO#
2	07/07/08	CAULKING	AS	TH	66
1	07/20/07	BIKEPATH BRACKETS	GB	TH	33

REVISIONS

CONTRACT CHANGE ORDER NO. _____
SHEET ___ OF ___

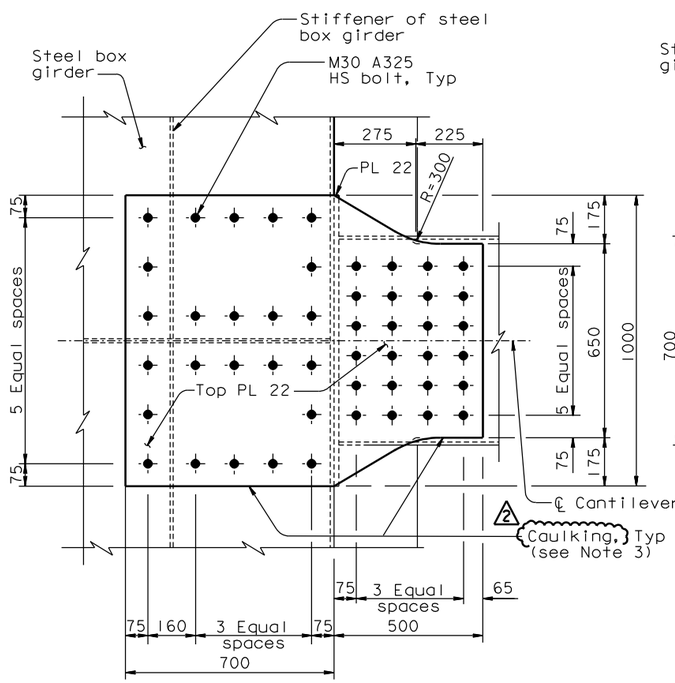

SECTION B-B
1:10

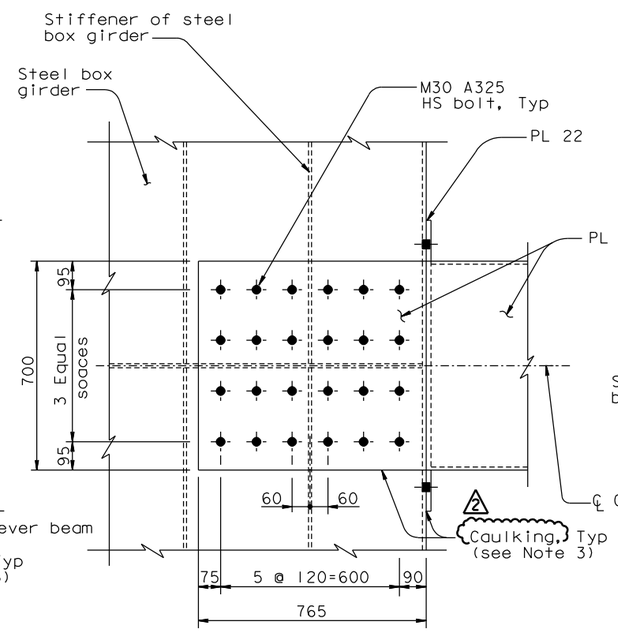

SECTION C-C
1:10

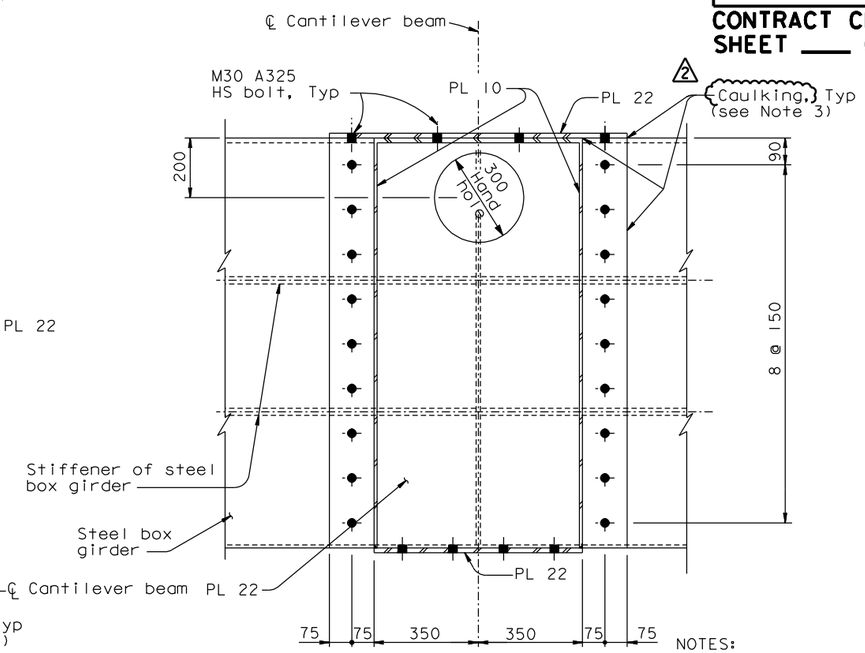

SECTION D-D
1:10

NOTES:

1. For location of typical cantilever beam, see "Bikepath Layout" sheets.
2. For Details A and B, see "Suspender Bracket Details No. 2" sheet.
3. Caulking shall be provided along all edges of bolted connection between bikepath cantilever beam and box girder.

ALL DIMENSIONS ARE IN MILLIMETERS UNLESS OTHERWISE SHOWN

R. Valizadeh/V. Toan/Y.L./W.L./F.C.
DESIGN OVERSIGHT
Y. Liu
SIGN OFF DATE 07/07/08

Rev. Date: 5-18-98

	BY	CHECKED
DESIGN	T. Ho	T. McMeans
DETAILS	R. Xu	P. Ritchie
QUANTITIES	C. Bernardo	S. Shi

PREPARED FOR THE STATE OF CALIFORNIA DEPARTMENT OF TRANSPORTATION

R. Manzanarez
PROJECT ENGINEER

BRIDGE NO. 34-0006L/R
KILOMETER POST 13.2/13.9

SAN FRANCISCO OAKLAND BAY BRIDGE
EAST SPAN SEISMIC SAFETY PROJECT
SELF-ANCHORED SUSPENSION BRIDGE (SUPERSTRUCTURE & TOWER)

BIKEPATH DETAILS NO. 1

ORIGINAL SCALE IN MILLIMETERS FOR REDUCED PLANS 0 10 20 30 40 50 60 70 80 90 100

CU 04
EA 0120F1

DISREGARD PRINTS BEARING EARLIER REVISION DATES

REVISION DATES (PRELIMINARY STAGE ONLY): 05/15/99 08/02/99 05/31/01 04/08/02 07/01/02 12/13/02 11/13/05

SHEET 408R2 OF

FILE => I:\bb\04-012001\sas\contract plans and cco\cco\in progress\cco#66\dgn\agbwd01.dgn

USERNAME => vignatovskDATE PLOTTED => 03 JUL 2008 TIME PLOTTED => 13:48:22

100 %PS&E