MARK	DATE	DESCRIPTIONS	BY	CH'D	CCO#
1	07/18/08	TOWER ACCESS	NV	MN	65

REQUESTS FOR INFORMATION NOT ADDRESSED IN THIS CCO REMAIN IN FORCE

REVISIONS

CONTRACT CHANGE ORDER NO. ____
SHEET ___ OF ___

DIST.	COUNTY	ROUTE	KILOMETER POST TOTAL PROJECT	SHEET NO.	TOTAL SHEETS
04	SF	80	13.2/13.9	924R1	1204

REGISTERED ENGINEER - CIVIL
12-6-04
PLANS APPROVAL DATE

REGISTERED PROFESSIONAL ENGINEER Marwan N. Nader No. C 054426 Exp. 12/31/09 CIVIL STATE OF CALIFORNIA

The State of California or its officers or agents shall not be responsible for the accuracy or completeness of electronic copies of this plan sheet.

T.Y. LIN / MOFFATT & NICHOL
825 BATTERY STREET
SAN FRANCISCO, CA 94111

Caltrans now has a web site! To get to the web site, go to: http://www.dot.ca.gov

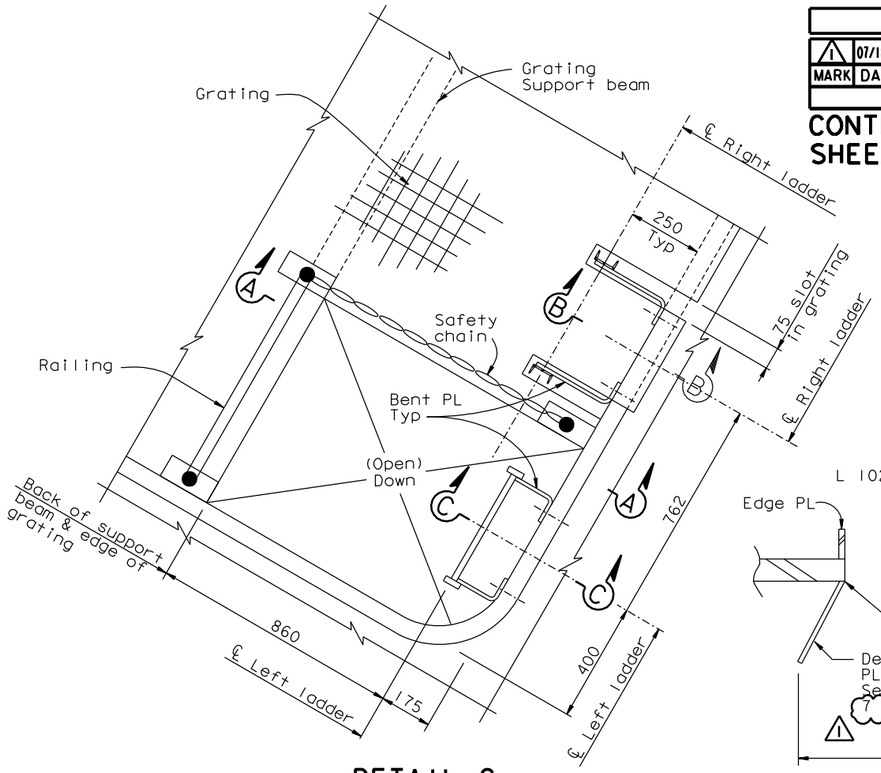

DETAIL C
1:10

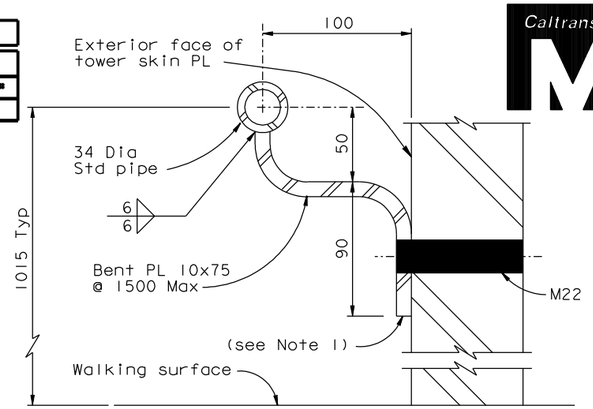

SAFETY HANDRAIL TYPICAL DETAIL
1:2

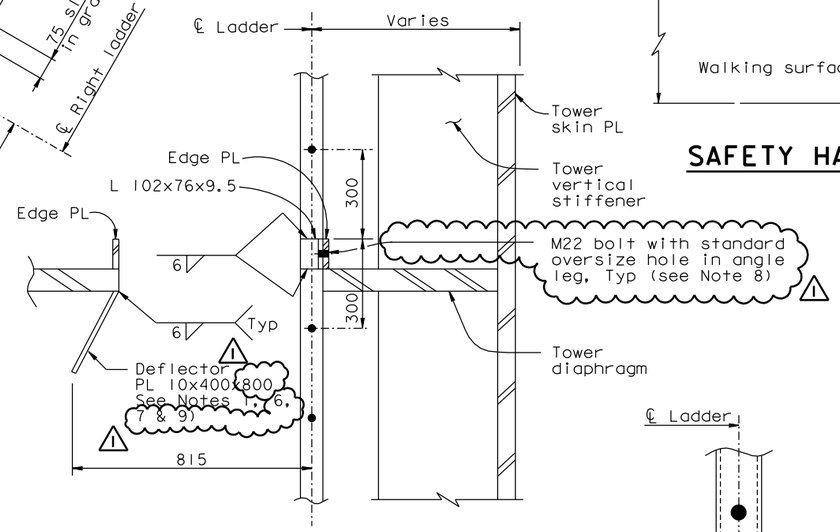

SECTION D-D
1:10

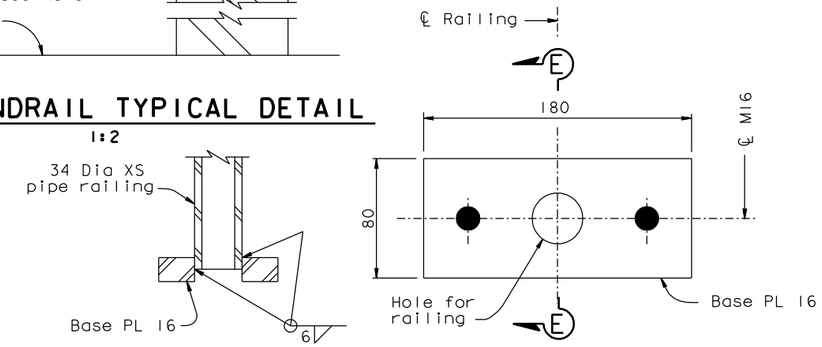

SECTION E-E

PLAN VIEW

RAILING BASE PLATE DETAILS
1:2

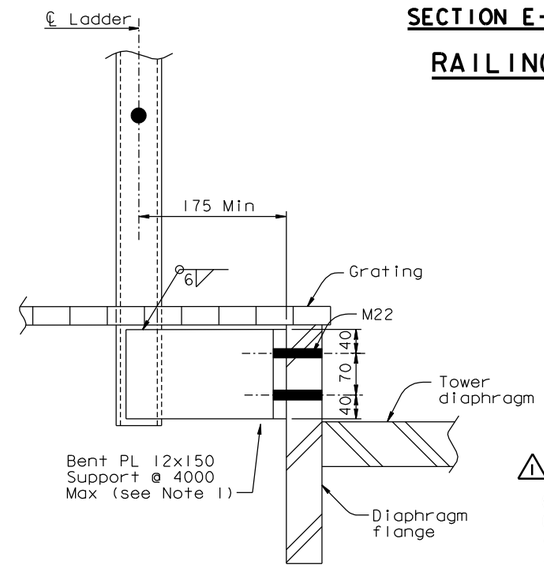

TYPICAL LADDER CONNECTION TO DIAPHRAGM FLANGE

SECTION B-B
1:5
(SECTION C-C similar)

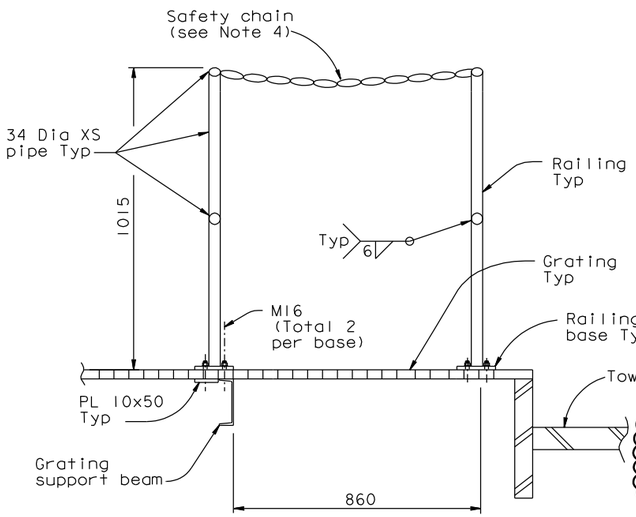

SECTION A-A
1:10

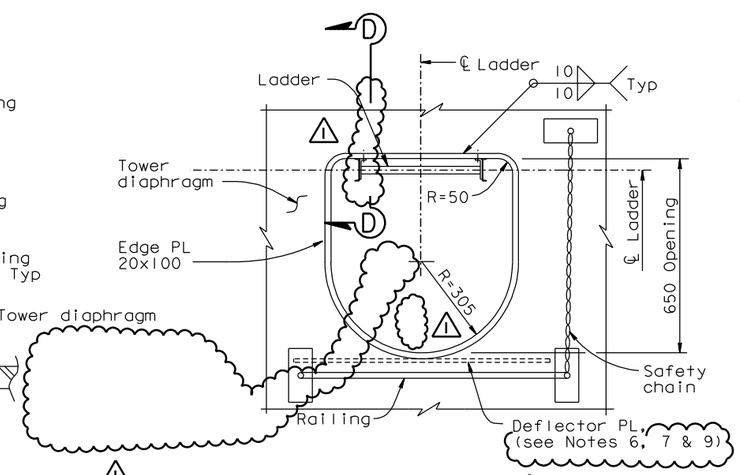

DETAIL E
1:10

NOTES:

1. The Contractor shall detail typical connections to fit the supporting structure, and may submit alternative designs for review and approval of the Engineer.
2. For tower diaphragm dimensions, see "Tower Diaphragm Details" sheets.
3. For ladder details not shown, see "Tower Access Details No. 7" sheet.
4. Safety chain shall be galvanized chain with spring clip end fasteners. Chain and fasteners to be rated at 5 kN (1000 lb) breaking load.
5. Opening in grating and direction of ladder shall alternate as shown on Section B-B on "Tower Access Details No.5" sheet. Railing and safety chain shall enclose opening in grating.
6. Deflector plate may be omitted at the two ladder openings at elevation 9.000 m.
7. Deflector plate may be coped or slotted to clear longitudinal stiffeners.
8. Bolt shall be installed snug-tight prior to load transfer and fully tensioned after load transfer.
9. Deflector plates interfering with diaphragm web access openings at elevation 109.000 m and above shall be omitted.

ALL DIMENSIONS ARE IN MILLIMETERS UNLESS OTHERWISE SHOWN

100% PS&E

R. Valizadeh/V. Toan/Y.L./W.L./F.C.
DESIGN OVERSIGHT
Roya Valizadeh / Vong Ban / Y. Liu
SIGN OFF DATE 7/18/08

Rev. Date: 5-18-98

	BY	CHECKED
DESIGN	M. Nader	M. Gulyas
DETAILS	G. Baker	L. Rus
QUANTITIES	D. Turner	J. Leventini

PREPARED FOR THE STATE OF CALIFORNIA DEPARTMENT OF TRANSPORTATION

R. Manzanarez
PROJECT ENGINEER

BRIDGE NO. 34-0006L/R
KILOMETER POST 13.2/13.9

SAN FRANCISCO OAKLAND BAY BRIDGE
EAST SPAN SEISMIC SAFETY PROJECT
SELF-ANCHORED SUSPENSION BRIDGE
(SUPERSTRUCTURE & TOWER)

TOWER ACCESS DETAILS NO. 8

ORIGINAL SCALE IN MILLIMETERS FOR REDUCED PLANS 0 10 20 30 40 50 60 70 80 90 100

CU 04
EA 0120F1

DISREGARD PRINTS BEARING EARLIER REVISION DATES

REVISION DATES (PRELIMINARY STAGE ONLY) 05/15/99 08/02/99 05/31/01 04/08/02 07/01/02 12/19/02

SHEET 507R1 OF

FILE => I:\bb\04-01201\sas\contract plans and cco\cco\in progress\cco#65\update 10-07-08\dgn\akacc08c.dgn

USERNAME => dwinrow DATE PLOTTED => 02 OCT 2008 TIME PLOTTED => 13:26:29