DIST.	COUNTY	ROUTE	KILOMETER POST TOTAL PROJECT	SHEET NO.	TOTAL SHEETS
04	SF	80	13.2/13.9	923R1	1204

Caltrans Metric

REGISTERED ENGINEER - CIVIL

12-6-04
PLANS APPROVAL DATE

REGISTERED PROFESSIONAL ENGINEER Marwan N. Nader No. C 054426 Exp. 12/31/09 CIVIL STATE OF CALIFORNIA

The State of California or its officers or agents shall not be responsible for the accuracy or completeness of electronic copies of this plan sheet.

T.Y. LIN / MOFFATT & NICHOL
825 BATTERY STREET
SAN FRANCISCO, CA 94111

Caltrans now has a web site! To get to the web site, go to: http://www.dot.ca.gov

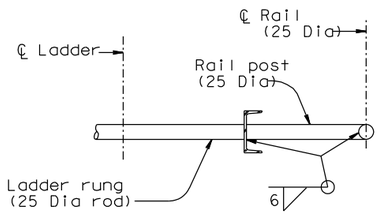

SECTION D-D
1:5

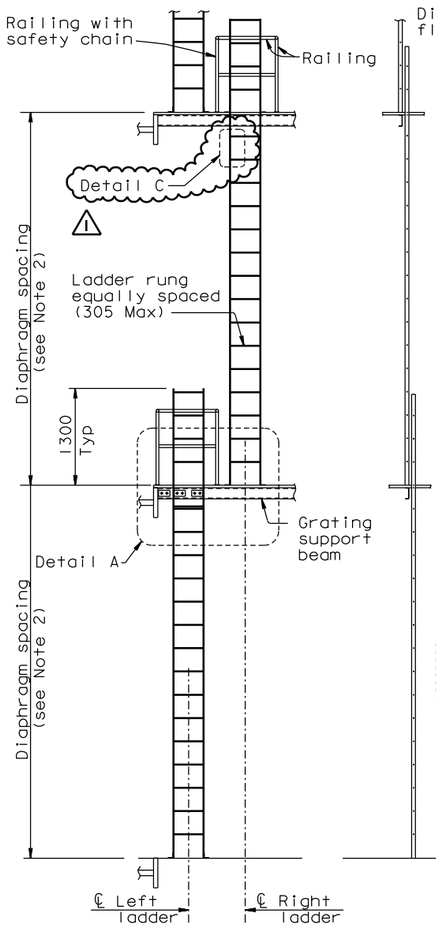

FRONT VIEW SIDE VIEW

TYPICAL LADDER DETAIL
(Shown for ladder platform Type 1, see Note 3)
1:40

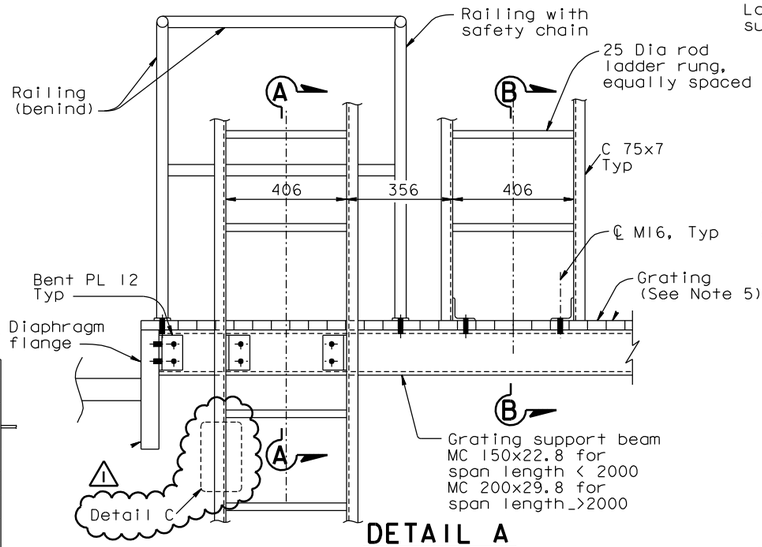

DETAIL A
1:10

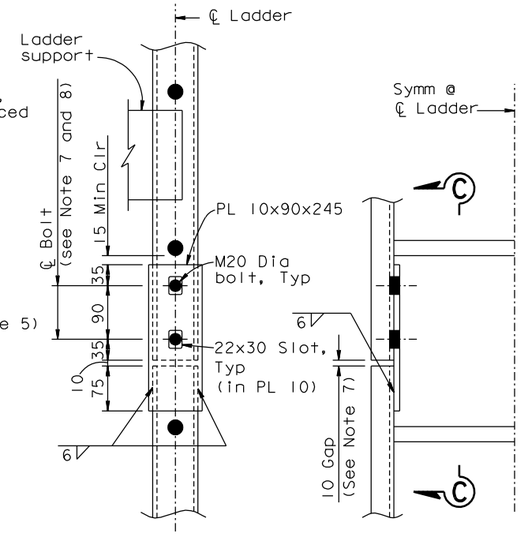

SECTION C-C DETAIL C

TYPICAL LADDER CONTRACTION JOINT DETAIL
1:5

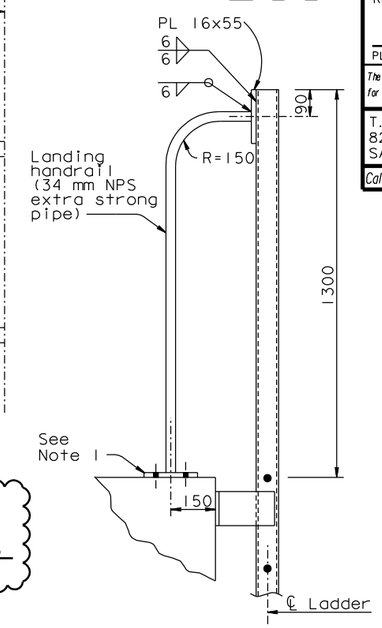

LANDING HANDRAIL DETAIL
1:10

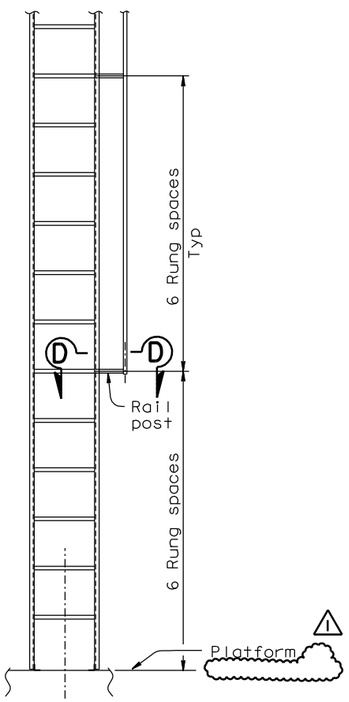

ELEVATION VIEW WITH LADDER AND SAFETY RAIL
1:20 (see Note 4)

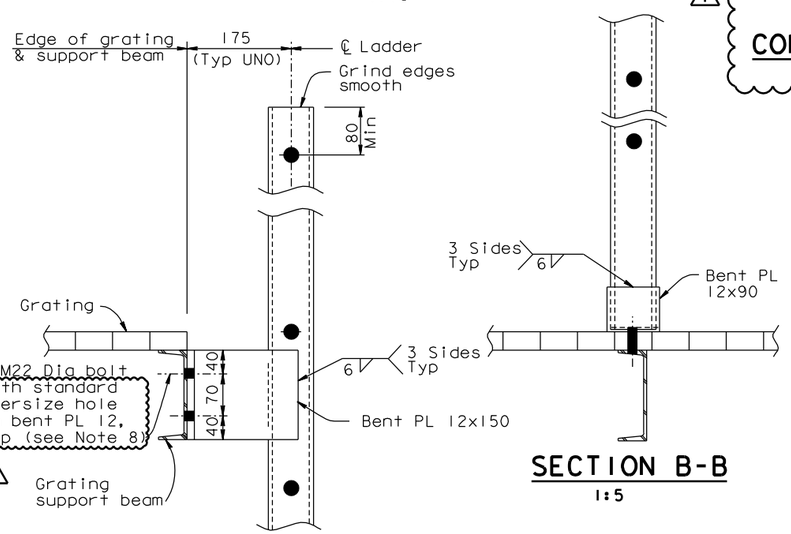

SECTION A-A
1:5

SECTION B-B
1:5

TYPICAL LADDER CONNECTIONS TO SUPPORT BEAM

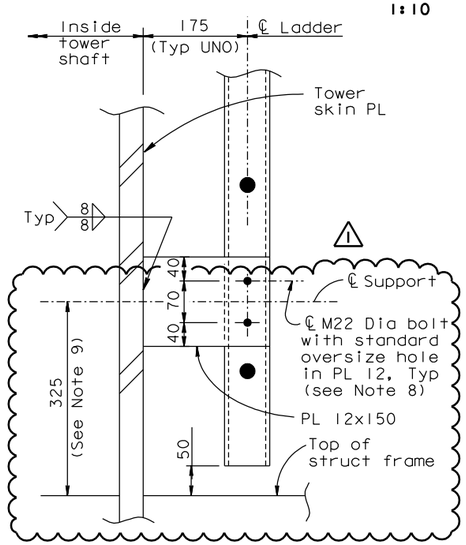

TYPICAL LADDER CONNECTIONS TO TOWER FACE
1:5

ALL DIMENSIONS ARE IN MILLIMETERS UNLESS OTHERWISE SHOWN

7. Bolts shall be centered in the vertical slotted holes and the 10 mm gap shall be maintained prior to load transfer.
8. Bolts shall be installed snug-tight prior to load transfer and fully tensioned after load transfer.
9. At the Contractor's option, dimension may be adjusted to ensure ladder support is located between the first and second ladder rungs.

NOTES:

1. For railing base plate details, see "Tower Access Details No.8" sheet.
2. For diaphragm spacing, see "Tower Diaphragm Details" sheets.
3. Ladder connections vary. For typical ladder connections to diaphragm flange, see "Tower Access Details No.8" sheet.
4. For ladder runs longer than 10.00 m, safety cage shall be provided around ladder. For safety cage details, see "Tower Access Details No.16" sheet.
5. Galvanized steel grating with fasteners to be provided by Contractor. Grating working load shall be 4.8 kN/m² (100 psf).

REQUESTS FOR INFORMATION NOT ADDRESSED IN THIS CCO REMAIN IN FORCE

MARK	DATE	DESCRIPTIONS	BY	CH'D	CCO#
1	08/15/08	TOWER ACCESS	NV	MN	65

REVISIONS

CONTRACT CHANGE ORDER NO. ____
SHEET ___ OF ___

R. Valizadeh/V. Toan/Y.L./W.L./F.C.
DESIGN OVERSIGHT
SIGN OFF DATE 08/15/08

Rev. Date: 5-18-98

DESIGN	BY M. Nader	CHECKED M. Gulyas	
DETAILS	BY G. Baker	CHECKED L. Rus	
QUANTITIES	BY D. Turner	CHECKED J. Leventini	

PREPARED FOR THE STATE OF CALIFORNIA DEPARTMENT OF TRANSPORTATION

R. Manzanarez
PROJECT ENGINEER

BRIDGE NO. 34-0006L/R
KILOMETER POST 13.2/13.9

CU 04
EA 0120F1

ORIGINAL SCALE IN MILLIMETERS FOR REDUCED PLANS 0 10 20 30 40 50 60 70 80 90 100

DISREGARD PRINTS BEARING EARLIER REVISION DATES → 05/15/99 08/02/99 05/31/01 04/08/02 07/01/02 12/19/02

SAN FRANCISCO OAKLAND BAY BRIDGE
EAST SPAN SEISMIC SAFETY PROJECT
SELF-ANCHORED SUSPENSION BRIDGE
(SUPERSTRUCTURE & TOWER)

TOWER ACCESS DETAILS NO. 7

SHEET 506R1 OF

FILE => I:\bb\04-012001\sas\contract plans and cco\cco\in progress\cco#65\update 10-07-08\dgn\akacc08b.dgn

100 % PS&E

USERNAME => dwinrow DATE PLOTTED => 02 OCT 2008 TIME PLOTTED => 13:25:16