DIST.	COUNTY	ROUTE	KILOMETER POST TOTAL PROJECT	SHEET NO.	TOTAL SHEETS
04	SF	80	13.2/13.9	920R2	1204

REGISTERED ENGINEER - CIVIL

12-6-04
PLANS APPROVAL DATE

REGISTERED PROFESSIONAL ENGINEER Marwan N. Nader No. C 054426 Exp. 12/31/09 CIVIL STATE OF CALIFORNIA

The State of California or its officers or agents shall not be responsible for the accuracy or completeness of electronic copies of this plan sheet.

T.Y. LIN / MOFFATT & NICHOL
825 BATTERY STREET
SAN FRANCISCO, CA 94111

Caltrans now has a web site! To get to the web site, go to: http://www.dot.ca.gov

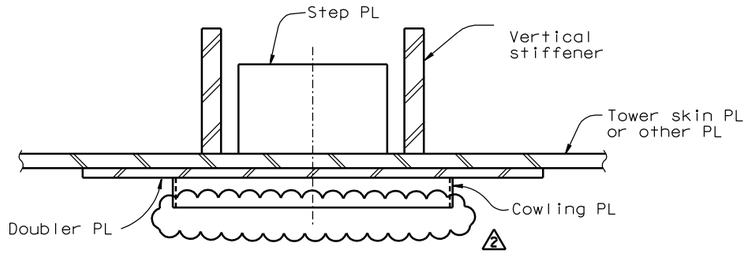

SECTION B-B
1:10

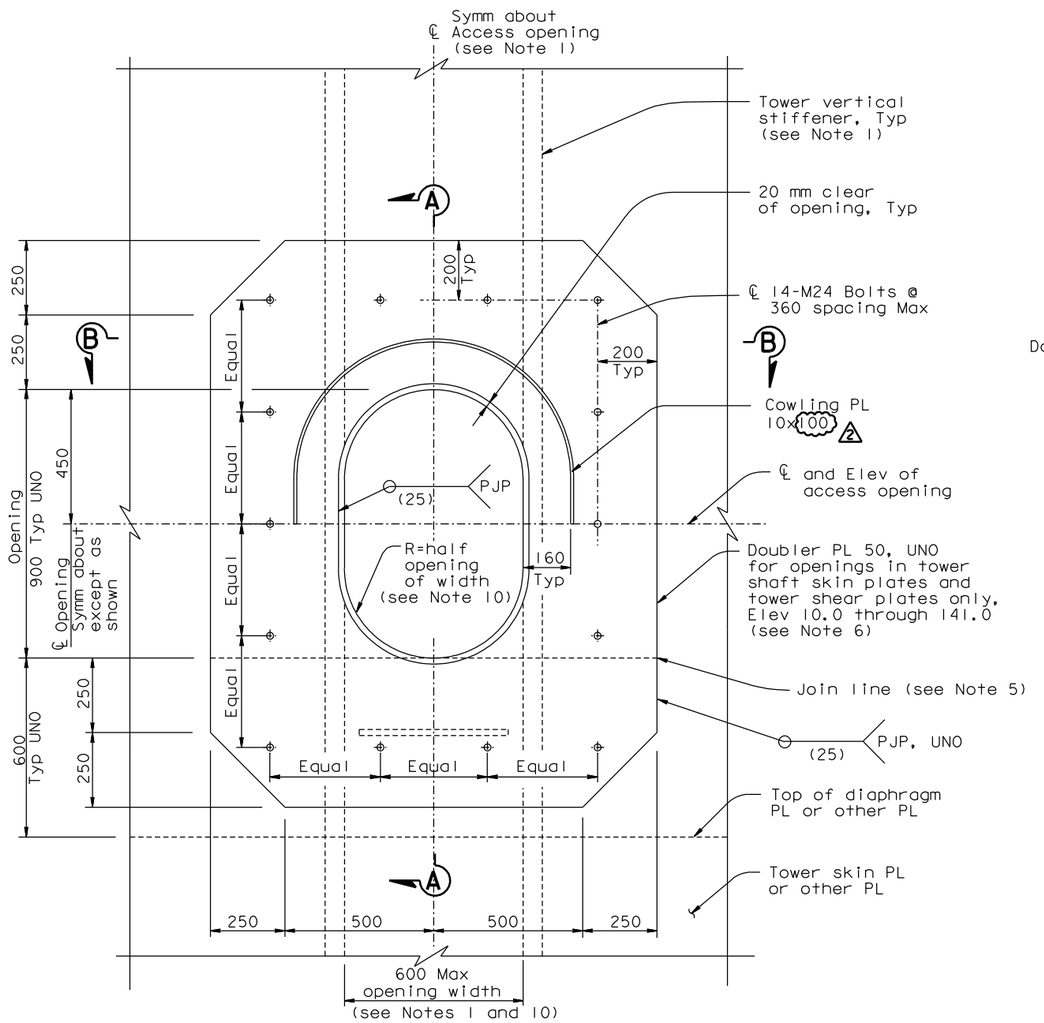

ACCESS OPENING DETAIL
1:10

(see Note 6)
(Dehumidification access opening similar)

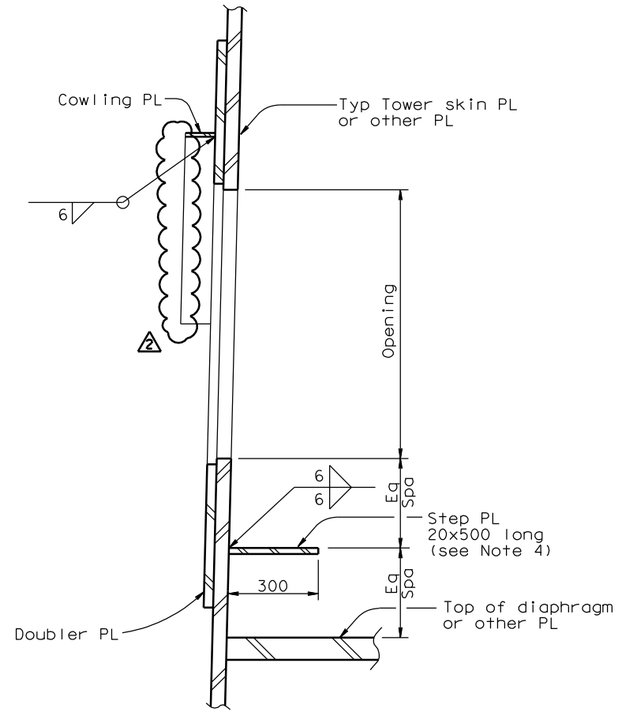

SECTION A-A
1:10

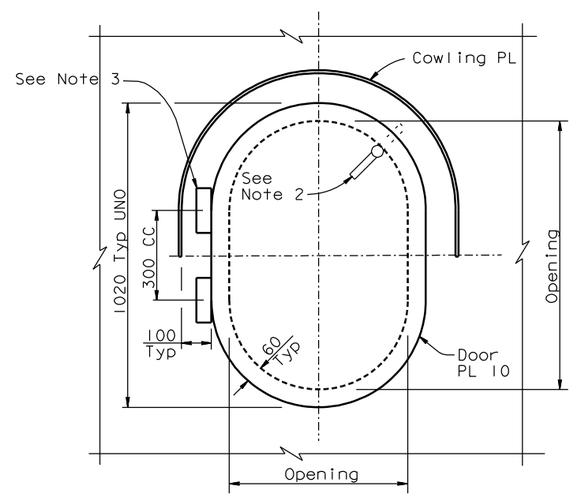

ACCESS OPENING DOOR DETAIL
1:10

(Dehumidification access opening door similar)

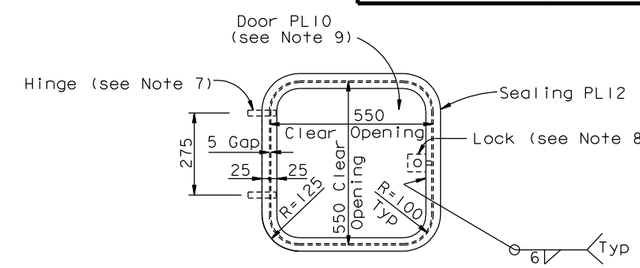

ACCESS OPENING WITH DOOR AT VERTICAL FACE OF TOWER STRUT FACADE
1:10

NOTES:

1. Width of opening is limited to clear distance between stiffeners. For location of access opening and stiffener spacing in tower, see "Tower Shaft Details" sheets.
2. Doors shall be secured by cam locks with locking L-handles and interior release.
3. Door hinges shall be stainless lift-off type with 16 mm pin size 150 kg rated capacity per hinge.
4. Use step PL where door sill is greater than 500 above landing.
5. For access openings at elevations 54.550, 90.550 and 140.550 omit doubler PL below join line. Connect upper portion to strut doubler PL using CJP welds at join line. For strut doubler PL, see "Tower Strut Details" sheets.
6. Access opening shown is for openings in tower shaft skin plates and shear plates. Access opening in tower skirt and tower head are similar. The doubler PL shall match the thickness of the penetrated skirt or tower head PL and shall be connected with a PJP weld 8 mm.
7. Contractor shall provide internally mounted pivot hinges. No part of hinge shall protrude beyond the outside surface of door or facade when door is closed. Hinges shall permit door to swing outwards at least 120°. Each hinge shall be rated to resist 900 N in any direction.
8. Contractor shall provide through-hole mounted cam lock with key. Lock shall be flush with outside face of door.
9. Door shall be flush with outside face of facade. Edges of door shall be sealed with 5x20 Neoprene seals.
10. Dehumidification access openings shall have R=50 mm typical. Dehumidification access openings at tower head only shall be 680 mm x 900 mm.

ALL DIMENSIONS ARE IN MILLIMETERS UNLESS OTHERWISE SHOWN

REQUESTS FOR INFORMATION NOT ADDRESSED IN THIS CCO REMAIN IN FORCE

MARK	DATE	DESCRIPTIONS	BY	CH'D	CCO#
2	08/15/08	TOWER ACCESS	MN	NV	65
1	07/11/08	TOWER STRUT FACADES AND CROSS BRACING	MN	NV	64

REVISIONS

CONTRACT CHANGE ORDER NO. ____
SHEET ___ OF ___

R. Valizadeh/V. Toan/Y.L./W.L./F.C.
DESIGN OVERSIGHT
SIGN OFF DATE 08/15/08

Rev. Date: 5-18-98

	BY	CHECKED
DESIGN	M. Nader	M. Gulyas
DETAILS	G. Baker	L. Rus
QUANTITIES	D. Turner	J. Leventini

PREPARED FOR THE STATE OF CALIFORNIA DEPARTMENT OF TRANSPORTATION

R. Manzanarez
PROJECT ENGINEER

BRIDGE NO. 34-0006L/R
KILOMETER POST 13.2/13.9

SAN FRANCISCO OAKLAND BAY BRIDGE
EAST SPAN SEISMIC SAFETY PROJECT
SELF-ANCHORED SUSPENSION BRIDGE
(SUPERSTRUCTURE & TOWER)

TOWER ACCESS DETAILS NO. 4

ORIGINAL SCALE IN MILLIMETERS FOR REDUCED PLANS 0 10 20 30 40 50 60 70 80 90 100

CU 04
EA 0120F1

DISREGARD PRINTS BEARING EARLIER REVISION DATES

REVISION DATES (PRELIMINARY STAGE ONLY) 01/15/99 05/15/99 08/06/99 05/31/01 04/08/02 07/09/02 12/19/02

SHEET 503R2 OF

FILE => I:\bb\04-012001\sas\contract plans and cco\cco\in progress\cco#65\update 10-07-08\dgn\akacc05a.dgn

100% PS&E

USERNAME => dwinrow DATE PLOTTED => 02 OCT 2008 TIME PLOTTED => 13:16:38