DIST.	COUNTY	ROUTE	KILOMETER POST TOTAL PROJECT	SHEET NO.	TOTAL SHEETS
04	SF	80	13.2/13.9	918R1	1204

Caltrans Metric

REGISTERED ENGINEER - CIVIL

12-6-04
PLANS APPROVAL DATE

REGISTERED PROFESSIONAL ENGINEER Marwan N. Nader No. C 054426 Exp. 12/31/09 CIVIL STATE OF CALIFORNIA

The State of California or its officers or agents shall not be responsible for the accuracy or completeness of electronic copies of this plan sheet.

T.Y. LIN / MOFFATT & NICHOL
825 BATTERY STREET
SAN FRANCISCO, CA 94111

Caltrans now has a web site! To get to the web site, go to: http://www.dot.ca.gov

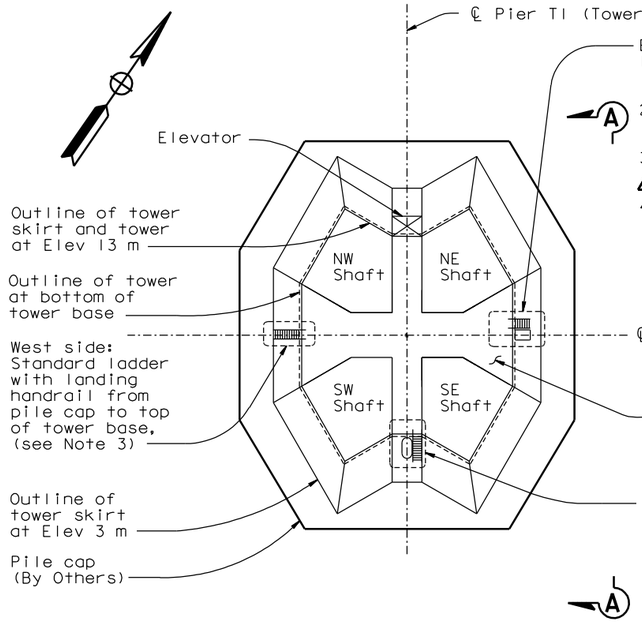

EXTERNAL PLAN VIEW AT ELEV 13.000 m

1:200

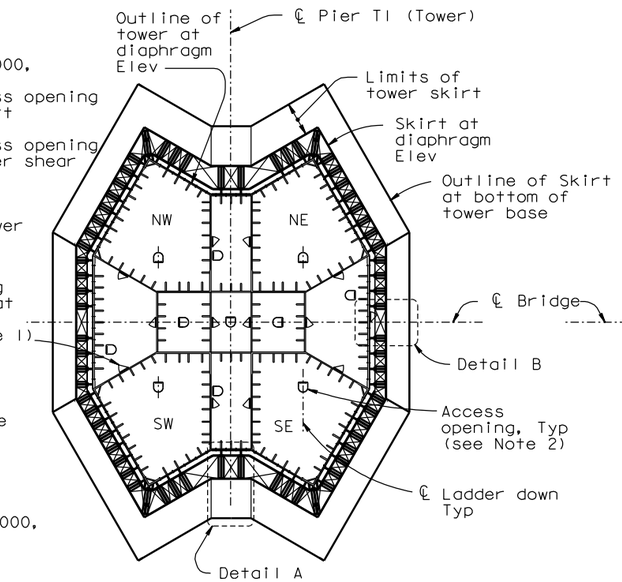

PLAN SECTION AT DIAPHRAGM AT ELEV 9.000 m

NTS

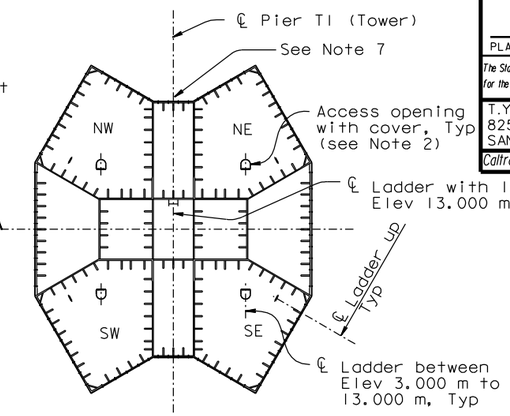

PLAN SECTION AT DIAPHRAGM AT ELEV 13.000 m

NTS

LEGEND:

- Access opening (see Note 5)
- Direction of main reinforcement of grating
- A — Tower shaft skin plate A

NOTES:

1. For access opening in tower shafts, see "Tower Shaft Details" sheets. All openings at Elev 10.050 m UNO.
2. For access opening in diaphragms, see "Tower Diaphragm Details" sheets. For access opening details see Detail E on "Tower Access Details No.8" sheet. For cover details, see "Tower Access Details No.9" sheet.
3. For ladder details not shown, see "Tower Access Details No. 7" sheet.
4. For standard platform details, see "Tower Access Details No.9" sheet.
5. For access opening and door details, see "Tower Access Details No.4" sheet. Access openings are without door, unless noted otherwise.
6. Galvanized steel grating with fasteners to be provided by Contractor. Grating working load shall be 4.8 kN/m² (100psf) unless noted otherwise.
7. For elevator landing and safety enclosures, see "Tower Elevator Support Details" sheets.

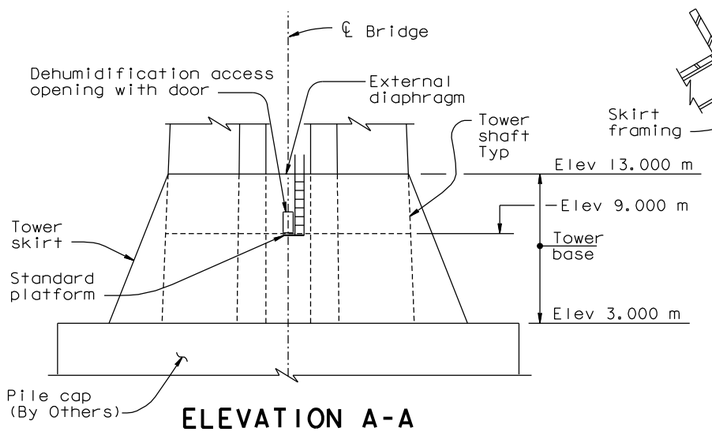

ELEVATION A-A

1:200

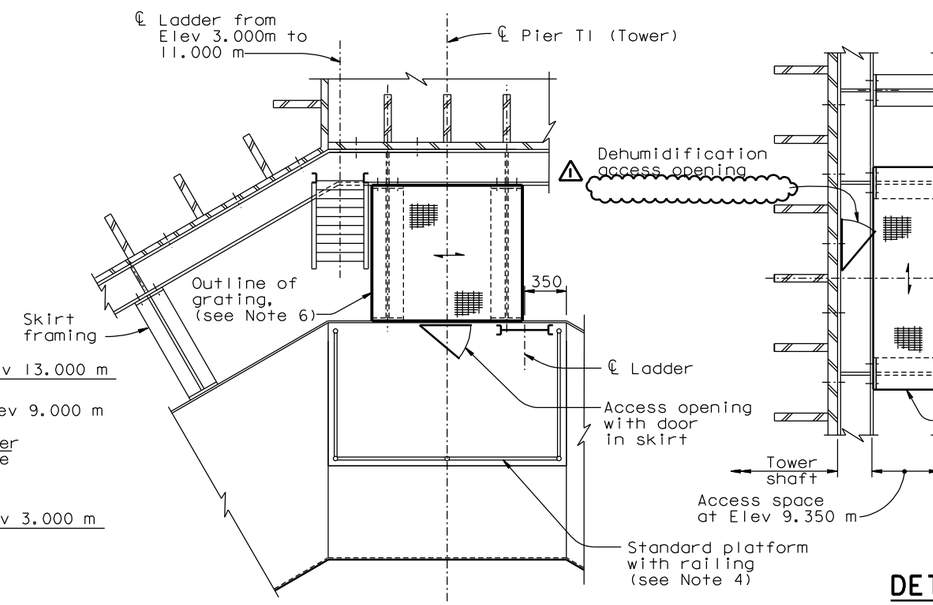

DETAIL A

1:25

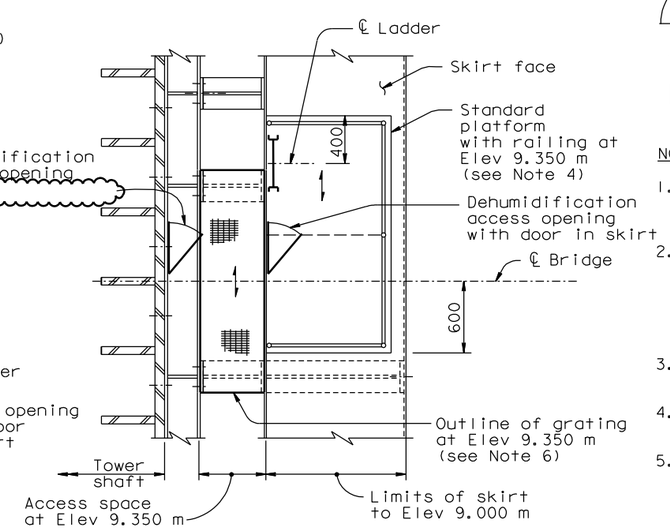

DETAIL B

1:25

REQUESTS FOR INFORMATION NOT ADDRESSED IN THIS CCO REMAIN IN FORCE

ALL DIMENSIONS ARE IN MILLIMETERS UNLESS OTHERWISE SHOWN

MARK	DATE	DESCRIPTIONS	BY	CH'D	CCO#
1	07/18/08	TOWER ACCESS	NV	MN	65

REVISIONS

CONTRACT CHANGE ORDER NO. ____
SHEET ___ OF ___

R. Valizadeh/V. Toan/Y.L./W.L./F.C.
DESIGN OVERSIGHT
Y. Lu
SIGN OFF DATE 07/18/08

Rev. Date: 5-18-98

	BY	CHECKED
DESIGN	M. Nader	M. Gulyas
DETAILS	G. Baker	L. Rus
QUANTITIES	D. Turner	J. Leventini

ORIGINAL SCALE IN MILLIMETERS FOR REDUCED PLANS 0 10 20 30 40 50 60 70 80 90 100

PREPARED FOR THE STATE OF CALIFORNIA DEPARTMENT OF TRANSPORTATION

R. Manzanarez
PROJECT ENGINEER

BRIDGE NO. 34-0006L/R
KILOMETER POST 13.2/13.9

CU 04
EA 0120F1

DISREGARD PRINTS BEARING EARLIER REVISION DATES 08/28/99 05/24/01 04/08/02 01/01/02 12/19/02

SAN FRANCISCO OAKLAND BAY BRIDGE
EAST SPAN SEISMIC SAFETY PROJECT
SELF-ANCHORED SUSPENSION BRIDGE
(SUPERSTRUCTURE & TOWER)

TOWER ACCESS DETAILS NO. 2

SHEET 501R1 OF

FILE => I:\bb\04-012001\sas\contract plans and cco\cco\in progress\cco#65\update 10-07-08\dgn\akacc10.dgn

100% PS&E

USERNAME => dwinrow DATE PLOTTED => 02 OCT 2008 TIME PLOTTED => 13:28:32