Caltrans now has a web site! To get to the web site, go to: http://www.dot.ca.gov

DIST.	COUNTY	ROUTE	KILOMETER POST TOTAL PROJECT	SHEET NO.	TOTAL SHEETS
04	SF	80	13.2/13.9	573R2	1204

REGISTERED ENGINEER - CIVIL

12-6-04
PLANS APPROVAL DATE

REGISTERED PROFESSIONAL ENGINEER Marwan N. Nader No. C 054426 Exp. 12/31/09 CIVIL STATE OF CALIFORNIA

The State of California or its officers or agents shall not be responsible for the accuracy or completeness of electronic copies of this plan sheet.

T.Y. LIN / MOFFATT & NICHOL
825 BATTERY STREET
SAN FRANCISCO, CA 94111

Caltrans Metric

LEGEND:
- M24 A325-X Bolt
- 24 Dia A307 Bolt

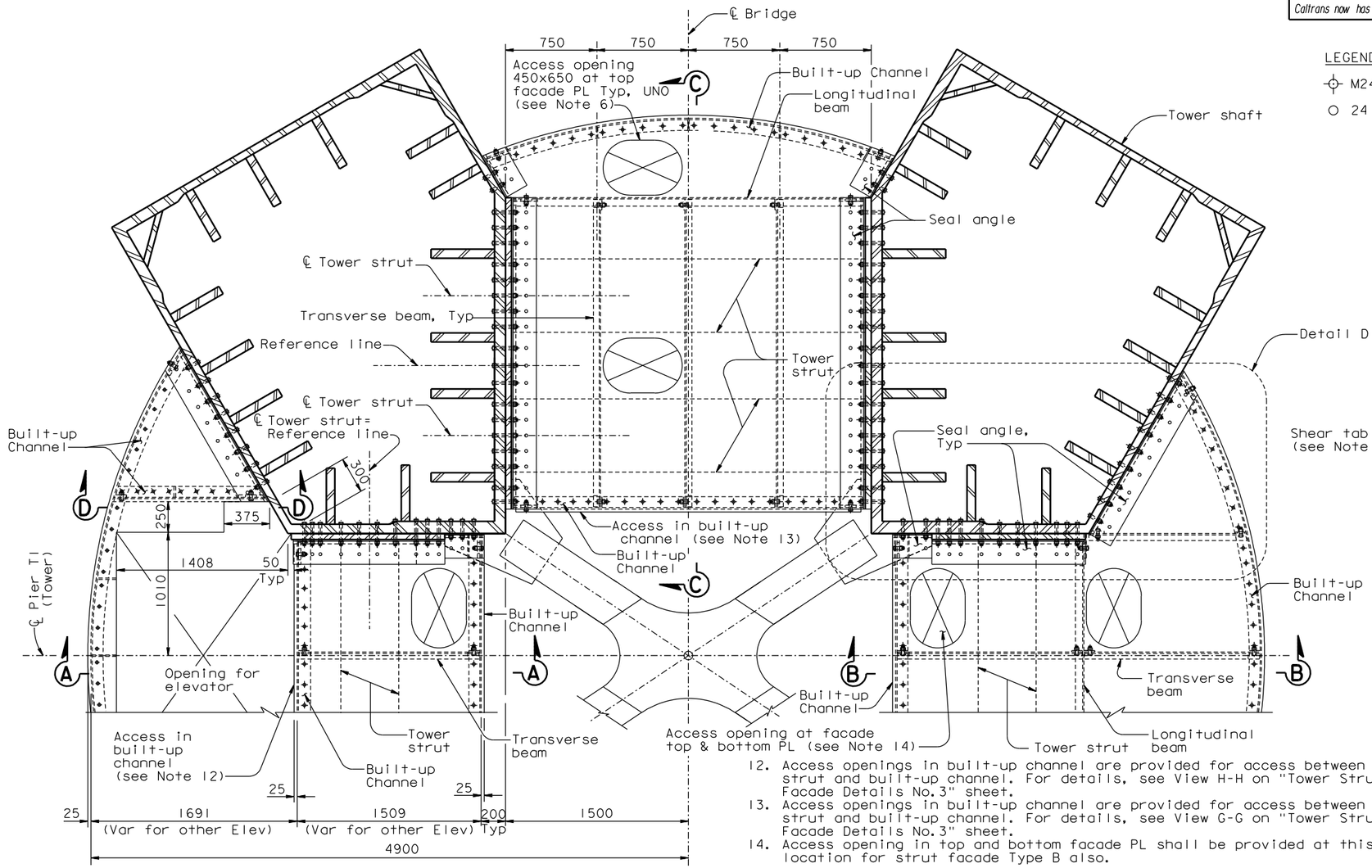

DETAIL A
1:20

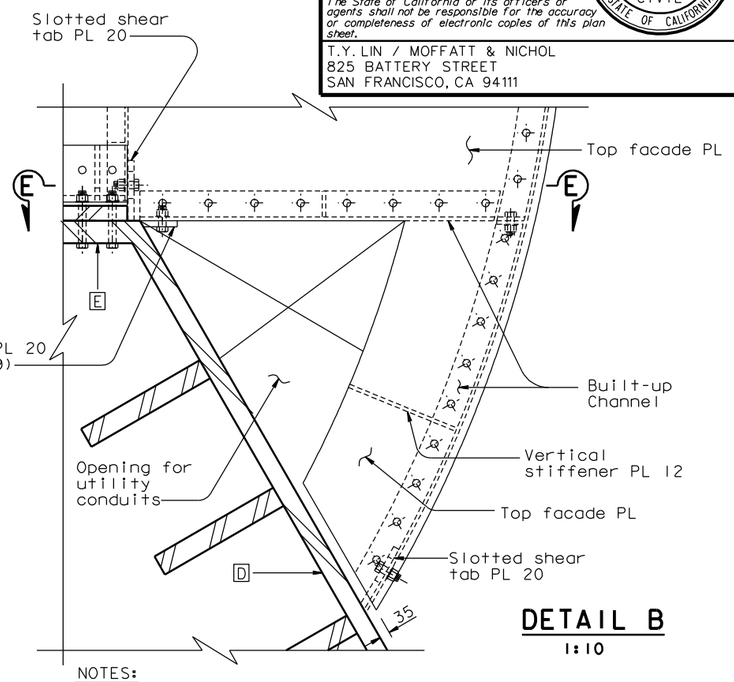

DETAIL B
1:10

NOTES:

1. For Detail D, see "Tower Strut Facade Details No.4" sheet.
2. For tower shaft details, see "Tower Shaft Details" sheets.
3. All bolts are A325 M24 unless noted otherwise.
4. For Section D-D and E-E, see "Tower Strut Facade Details No.3" sheet.
5. All details of tower strut facade shall account for the 1% slope of the tower top and bottom facade plates.
6. For access opening details, see "Tower Access Details" sheets. Access opening shall be located such that there is minimum interference with tower strut and tower strut facade framing system. Access openings may be offset subject to review and approval of the Engineer. 2
7. For details of built-up channel, see "Tower Strut Facade Details No.3" sheet.
8. Vertical plate of built-up channel at corner of plate D E shall be sloped to match the slope of edge of plate E.
9. Shear tab plate is similar to slotted shear tab plate but with standard holes. For details of slotted shear tab plate, see "Tower Strut Facade Details No.4" sheet.
10. Framing details and support at bottom of strut facade are similar to those at the top of strut facade, UNO.
11. For sealing details, see "Tower Strut Facade Details No.4" sheet.
12. Access openings in built-up channel are provided for access between tower strut and built-up channel. For details, see View H-H on "Tower Strut Facade Details No.3" sheet.
13. Access openings in built-up channel are provided for access between tower strut and built-up channel. For details, see View G-G on "Tower Strut Facade Details No.3" sheet.
14. Access opening in top and bottom facade PL shall be provided at this location for strut facade Type B also.

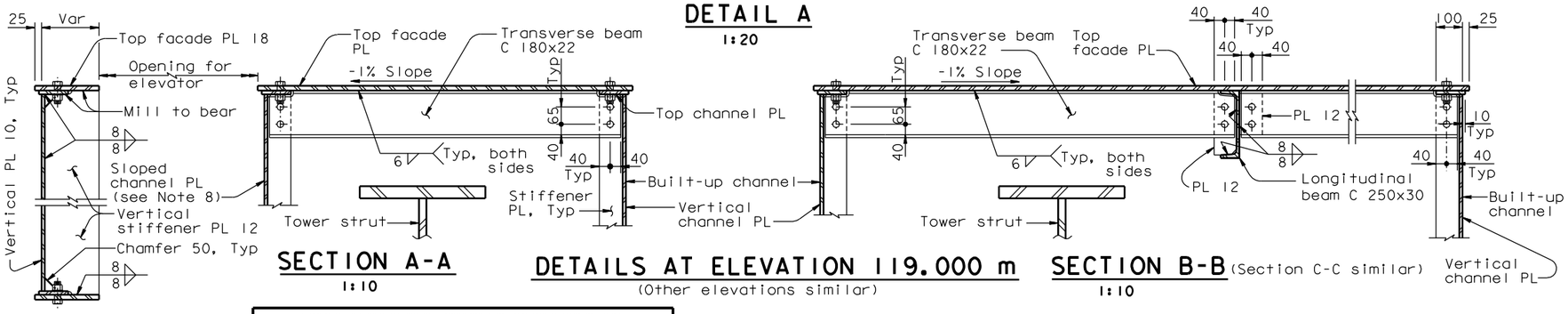

SECTION A-A
1:10

DETAILS AT ELEVATION 119.000 m
(Other elevations similar)

SECTION B-B (Section C-C similar)
1:10

REQUESTS FOR INFORMATION NOT ADDRESSED IN THIS CCO REMAIN IN FORCE

MARK	DATE	DESCRIPTIONS	BY	CH'D	CCO#
2	07/18/08	TOWER ACCESS	MN	NV	65
1	07/11/08	TOWER STRUT FACADES AND CROSS BRACING	MN	NV	64

REVISIONS

CONTRACT CHANGE ORDER NO. ____
SHEET ____ OF ____

ALL DIMENSIONS ARE IN MILLIMETERS UNLESS OTHERWISE SHOWN

	BY	CHECKED
DESIGN	M. Nader	M. Gulyas
DETAILS	L. Rus	M. Gulyas
QUANTITIES	L. Rus	Y. Zhang

PREPARED FOR THE STATE OF CALIFORNIA DEPARTMENT OF TRANSPORTATION

R. Manzanarez
PROJECT ENGINEER

BRIDGE NO. 34-0006L/R
KILOMETER POST 13.2/13.9

CU 04
EA 0120F1

R. Valizadeh/V. Toan/Y.L./W.L./F.C.
DESIGN OVERSIGHT
Ron Valizadeh / Vong Toan / Y. Liu
SIGN OFF DATE 07/18/08

Rev. Date: 5-18-98

ORIGINAL SCALE IN MILLIMETERS FOR REDUCED PLANS 0 10 20 30 40 50 60 70 80 90 100

DISREGARD PRINTS BEARING EARLIER REVISION DATES

REVISION DATES (PRELIMINARY STAGE ONLY): 08/08/99 05/31/01 04/08/02 01/01/02 12/19/02

SHEET 156R2 OF

SAN FRANCISCO OAKLAND BAY BRIDGE
EAST SPAN SEISMIC SAFETY PROJECT
SELF-ANCHORED SUSPENSION BRIDGE
(SUPERSTRUCTURE & TOWER)

TOWER STRUT FACADE DETAILS NO. 2

FILE => I:\bb\04-012001\sas\contract plans and cco\cco\in progress\cco#65\dgn\aetwsll.dgn

USERNAME => ptom DATE PLOTTED => 23 JUL 2008 TIME PLOTTED => 11:06:31

100% PS&E

DIST.	COUNTY	ROUTE	KILOMETER POST TOTAL PROJECT	SHEET NO.	TOTAL SHEETS
04	SF	80	13.2/13.9	575R3	1204

REGISTERED ENGINEER - CIVIL

12-6-04
PLANS APPROVAL DATE

REGISTERED PROFESSIONAL ENGINEER Marwan N. Nader No. C 054426 Exp. 12/31/09 CIVIL STATE OF CALIFORNIA

The State of California or its officers or agents shall not be responsible for the accuracy or completeness of electronic copies of this plan sheet.

T.Y. LIN / MOFFATT & NICHOL
825 BATTERY STREET
SAN FRANCISCO, CA 94111

Caltrans now has a web site! To get to the web site, go to: http://www.dot.ca.gov

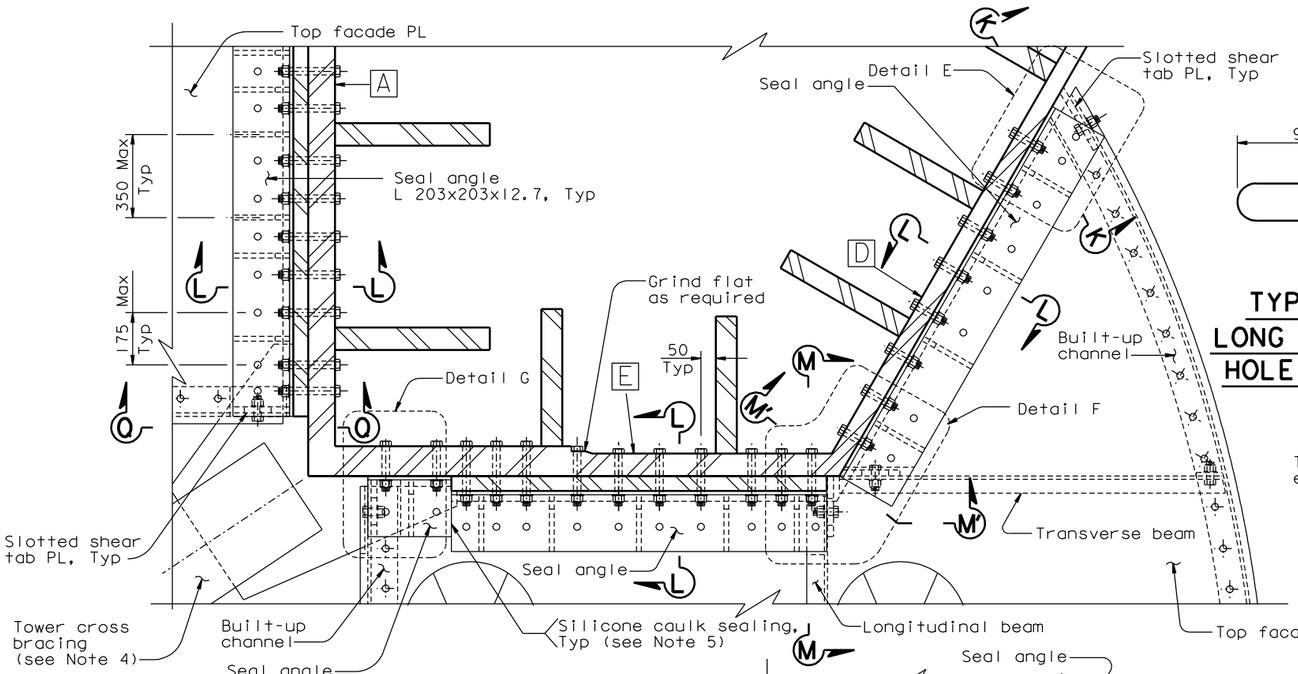

DETAIL D
1:10 (see Note 9)

TYPICAL LONG SLOTTED HOLE DETAIL
1:2

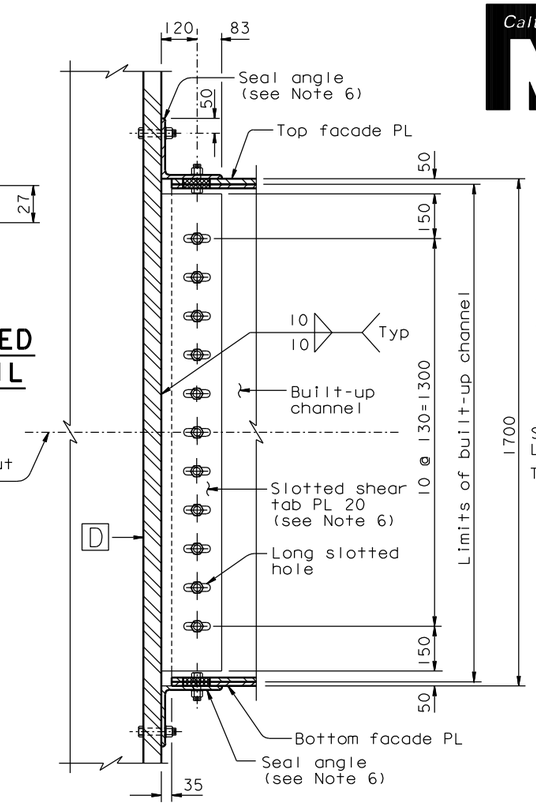

SECTION K-K (Typical connection of built-up channel to tower shaft UNO)
1:10 (see Note 9)

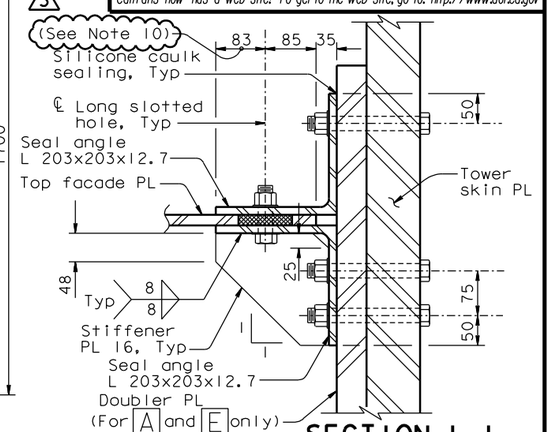

SECTION L-L
1:5 (see Note 9)

LEGEND:
- M24 A325-X Bolt
- 24 Dia A307 Bolt

NOTES:
1. All bolts are A325 M24 unless noted otherwise.
2. For details of built-up channel, see "Tower Strut Facade Details No.3" sheet.
3. All details of tower strut facade shall account for the 1% slope of the tower top and bottom facade plates.
4. For tower cross bracing location, see "Tower Strut Details No.9" sheet.
5. Seal plates and sealant material shall be placed such that the interior of the tower strut facade is properly sealed from the exterior.
6. PTFE film (0.5 thick) shall be applied on the faying surfaces between the slotted shear tab and the built-up channel plate, between the seal angle and the top facade PL, and between the seal angle and the bottom facade PL.
7. Seal plate shall be tight fit to the cross bracing gusset plate.
8. Cope vertical channel plate and slotted shear tab as necessary to accomodate cross bracing gusset plate. Slot location shall match slot in doubler plate . For doubler plate slot details, see "Tower Shaft Details No.11" sheet.
9. For sealing plate details, see Details E,F and Sections N-N,P-P,Q-Q.
10. At the Contractor's option, exterior sealing angle may be coped as required for clearance with access door cover plate to accommodate design movement, subject to review and approval of the Engineer.

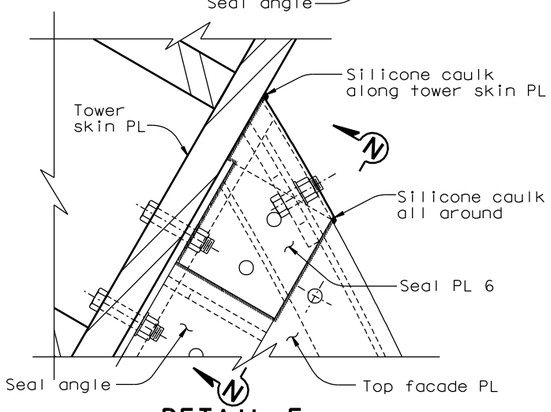

DETAIL E (Detail G similar)
1:5
(Typical edge seal Plate)

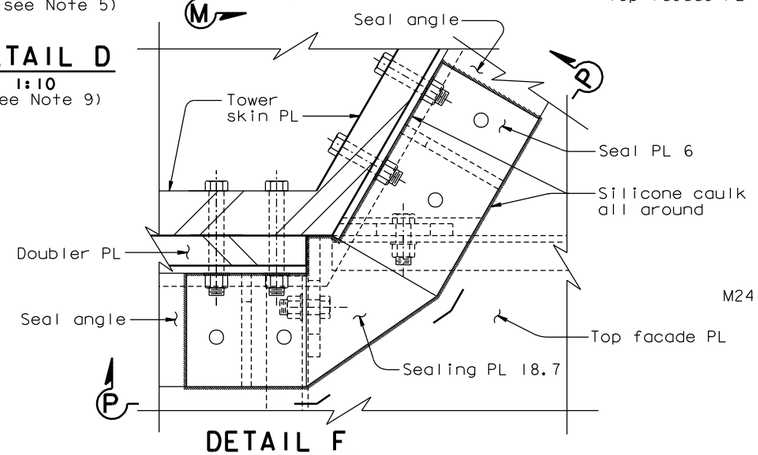

DETAIL F
1:5
(Typical corner seal Plate)

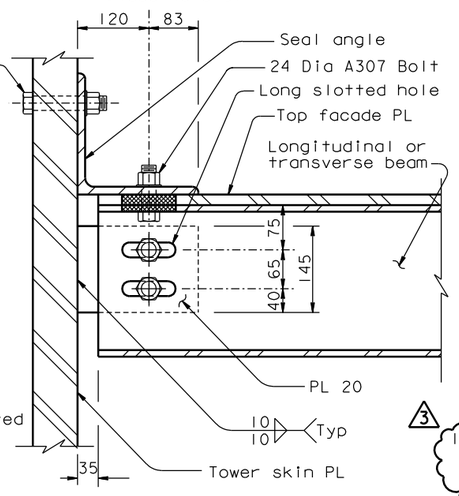

SECTION M-M (Section M'-M' similar)
1:5 (see Note 9)

ALL DIMENSIONS ARE IN MILLIMETERS UNLESS OTHERWISE SHOWN

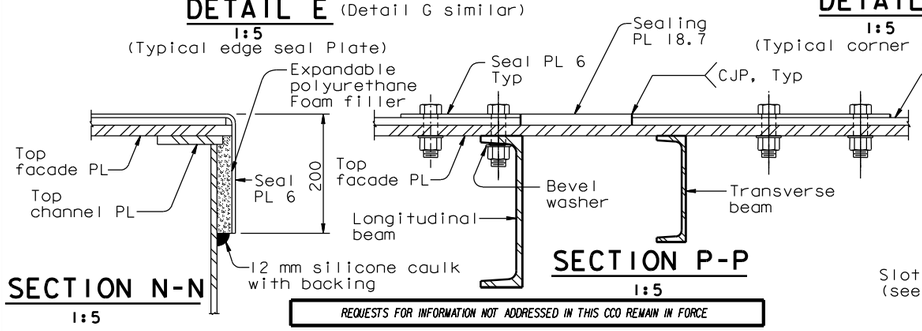

SECTION N-N
1:5

SECTION P-P
1:5

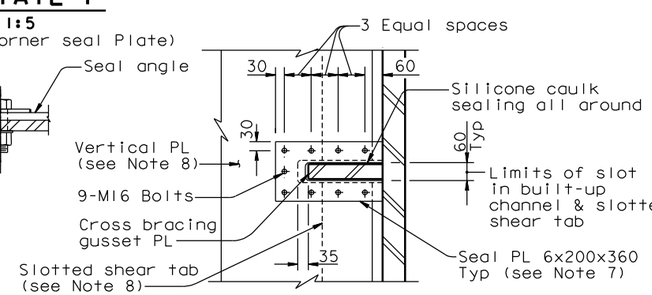

SECTION Q-Q (Typical gusset seal Plate)
1:10

REQUESTS FOR INFORMATION NOT ADDRESSED IN THIS CCO REMAIN IN FORCE

MARK	DATE	DESCRIPTIONS	BY	CH'D	CCO#
3	10/01/08	TOWER ACCESS	NV	MN	65
2	07/11/08	TOWER STRUT FACADES AND CROSS BRACING	NV	MN	64
1	08/01/07	TOWER STRUT FACADE PTFE	NV	MN	48

REVISIONS

CONTRACT CHANGE ORDER NO. ____
SHEET ____ OF ____

R. Valizadeh/V. Toan/Y.L./W.L./F.C.
DESIGN OVERSIGHT
Roya Valizadeh / Vong Toan / Y. Liu
SIGN OFF DATE 10/01/08

Rev. Date: 5-18-98

	BY	CHECKED
DESIGN	M. Nader	M. Gulyas
DETAILS	L. Rus	M. Gulyas
QUANTITIES	L. Rus	Y. Zhang

ORIGINAL SCALE IN MILLIMETERS FOR REDUCED PLANS 0 10 20 30 40 50 60 70 80 90 100

PREPARED FOR THE STATE OF CALIFORNIA DEPARTMENT OF TRANSPORTATION

R. Manzanarez
PROJECT ENGINEER

CU 04
EA 0120F1

BRIDGE NO. 34-0006L/R
KILOMETER POST 13.2/13.9

DISREGARD PRINTS BEARING EARLIER REVISION DATES

SAN FRANCISCO OAKLAND BAY BRIDGE
EAST SPAN SEISMIC SAFETY PROJECT
SELF-ANCHORED SUSPENSION BRIDGE
(SUPERSTRUCTURE & TOWER)

TOWER STRUT FACADE DETAILS NO. 4

REVISION DATES (PRELIMINARY STAGE ONLY): 08/02/99 05/31/01 04/08/02 04/26/02 12/19/02

SHEET 158R3 OF

FILE => I:\bb\04-012001\sas\contract plans and cco\cco\in progress\cco#65\update 10-07-08\dgn\aetws13.dgn

USERNAME => dwinrow DATE PLOTTED => 02 OCT 2008 TIME PLOTTED => 11:56:41

100 % PS&E

DIST.	COUNTY	ROUTE	KILOMETER POST TOTAL PROJECT	SHEET NO.	TOTAL SHEETS
04	SF	80	13.2/13.9	796R1	1204

REGISTERED ENGINEER - CIVIL

12-6-04
PLANS APPROVAL DATE

REGISTERED PROFESSIONAL ENGINEER Marwan N. Nader No. C 054426 Exp. 12/31/09 CIVIL STATE OF CALIFORNIA

The State of California or its officers or agents shall not be responsible for the accuracy or completeness of electronic copies of this plan sheet.

T.Y. LIN / MOFFATT & NICHOL
825 BATTERY STREET
SAN FRANCISCO, CA 94111

Caltrans now has a web site! To get to the web site, go to: http://www.dot.ca.gov

Caltrans Metric

Tower head PL	Thickness
A to G	16

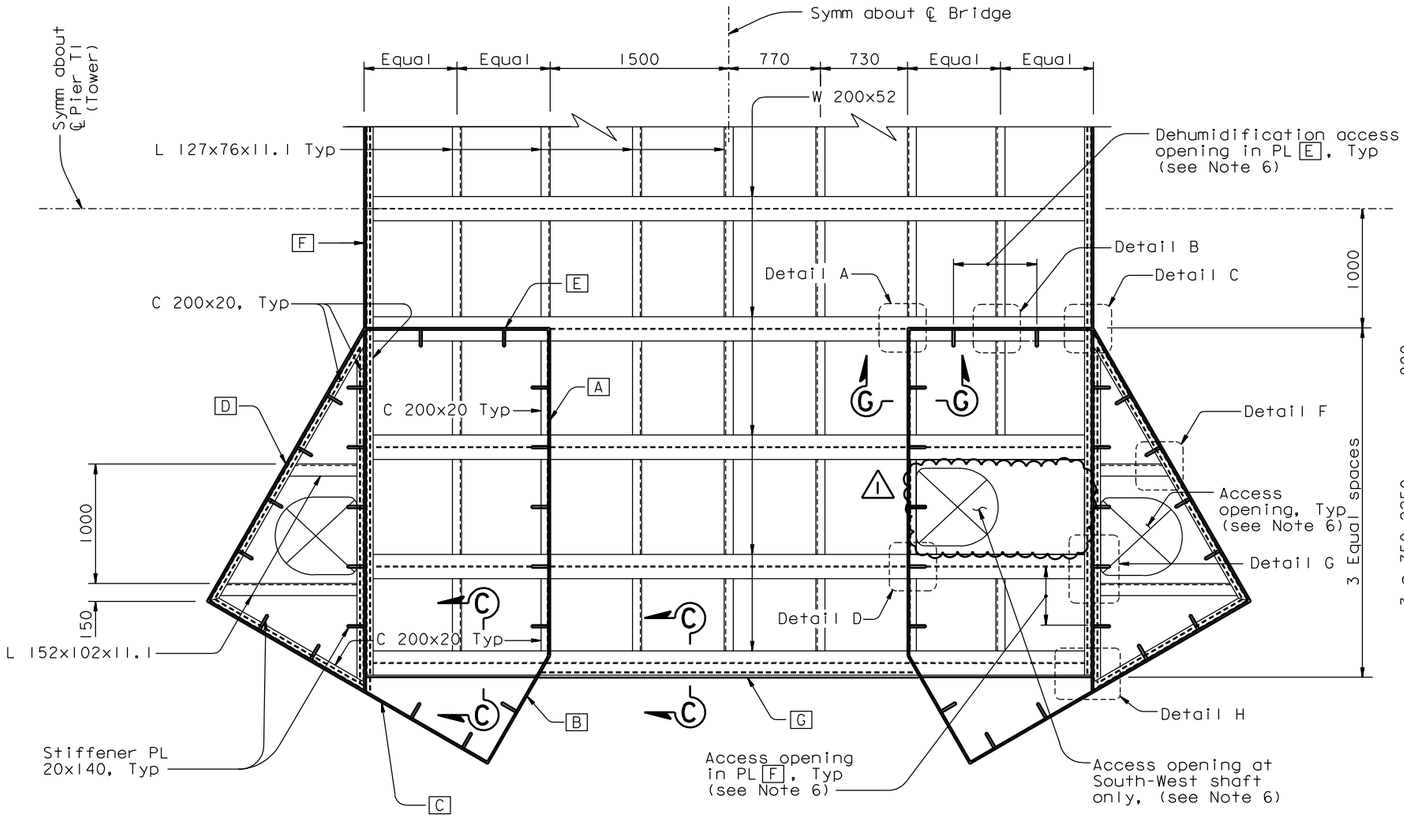

SECTION E-E
1:25

(Partial framing plan for tower head diaphragm, diaphragm PL not shown for clarity) (see Note 7)

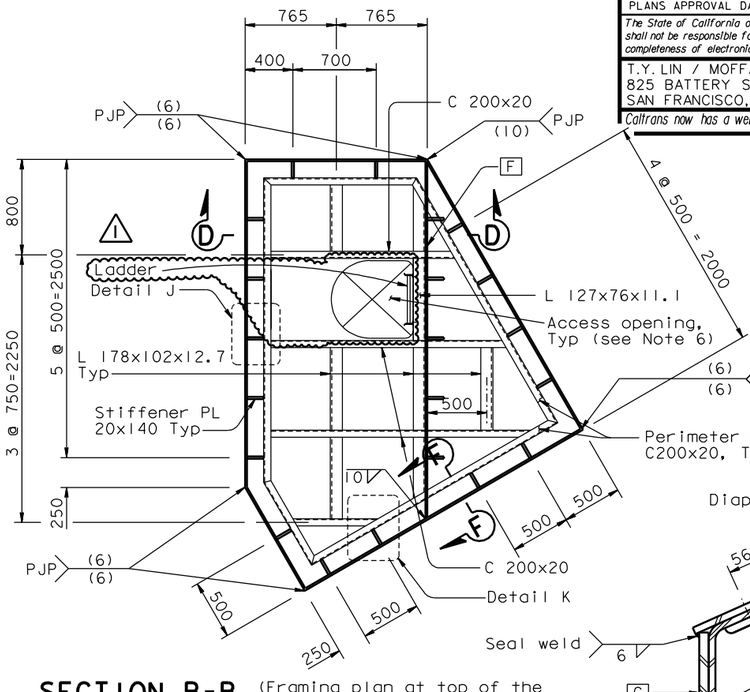

SECTION B-B
1:25

(Framing plan at top of the Tower at Elev 160 m. Tower top PL not shown for clarity)

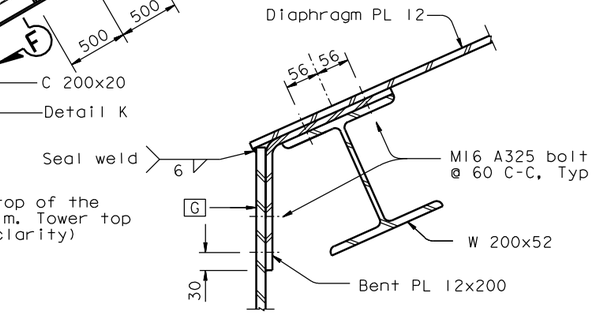

SECTION C-C
1:5

(see Note 1)

LEGEND:

A Tower head skin PL A

REQUESTS FOR INFORMATION NOT ADDRESSED IN THIS CCO REMAIN IN FORCE					
1	07/18/08	TOWER ACCESS	NV	MN	65
MARK	DATE	DESCRIPTIONS	BY	CH'D	CCO#
REVISIONS					

CONTRACT CHANGE ORDER NO. ____
SHEET ___ OF ___

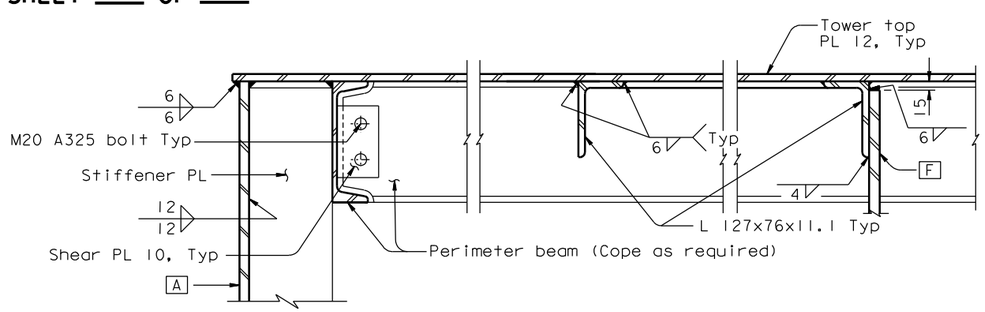

SECTION D-D
1:5

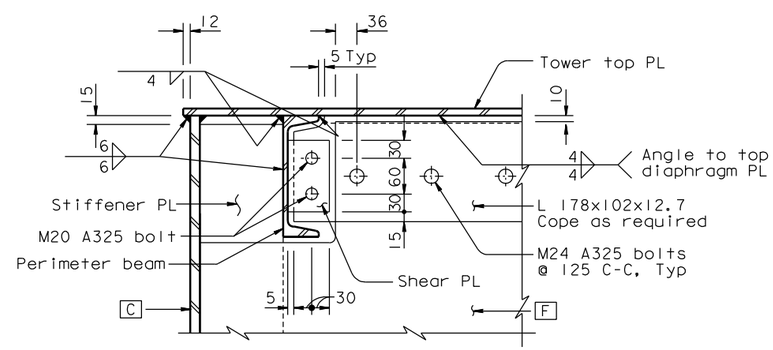

SECTION F-F
1:5

NOTES:

1. All details shall account for the actual slope and curvature of the tower head diaphragm and slope of tower top plate.
2. For Details A, B, C, D and Section G-G, see "Tower Head Details No.4" sheet.
3. For Details F, G and H, see "Tower Head Details No.5" sheet.
4. For Details J and K, see "Tower Head Details No.6" sheet.
5. For connection details, see schedule on "Tower Head Details No.4" sheet.
6. For tower access opening details, see "Tower Access Details" sheets.
7. Section E-E is shown rotated 90° counterclockwise.

ALL DIMENSIONS ARE IN MILLIMETERS UNLESS OTHERWISE SHOWN

SAN FRANCISCO OAKLAND BAY BRIDGE
EAST SPAN SEISMIC SAFETY PROJECT
SELF-ANCHORED SUSPENSION BRIDGE
(SUPERSTRUCTURE & TOWER)

TOWER HEAD DETAILS NO. 3

R. Valizadeh/V. Toan/Y.L./W.L./F.C.
DESIGN OVERSIGHT
Roya Valizadeh / Vong D. Toan / Y. Liu
SIGN OFF DATE 07/18/08

	BY	CHECKED
DESIGN	M. Nader	S. Camo
DETAILS	R. Kanitkar	G. Baker
QUANTITIES	R. Kanitkar	Y. Zhang

PREPARED FOR THE STATE OF CALIFORNIA DEPARTMENT OF TRANSPORTATION

R. Manzanarez
PROJECT ENGINEER

BRIDGE NO. 34-0006L/R
KILOMETER POST 13.2/13.9

Rev. Date: 5-18-98

ORIGINAL SCALE IN MILLIMETERS FOR REDUCED PLANS 0 10 20 30 40 50 60 70 80 90 100

CU 04
EA 0120F1

DISREGARD PRINTS BEARING EARLIER REVISION DATES

REVISION DATES (PRELIMINARY STAGE ONLY): 08/07/99 05/17/01 04/08/02 07/01/02 12/18/02 11/13/05

SHEET 379R1 OF

FILE => I:\bb\04-012001\sas\contract plans and cco\cco\in progress\cco#65\dgn\aghed03.dgn

100% PS&E

DATE PLOTTED => 23 JUL 2008 TIME PLOTTED => 11:07:15

USERNAME => ptom

DIST.	COUNTY	ROUTE	KILOMETER POST TOTAL PROJECT	SHEET NO.	TOTAL SHEETS
04	SF	80	13.2/13.9	917R1	1204

REGISTERED ENGINEER - CIVIL

12-6-04
PLANS APPROVAL DATE

REGISTERED PROFESSIONAL ENGINEER Marwan N. Nader No. C 054426 Exp. 12/31/09 CIVIL STATE OF CALIFORNIA

The State of California or its officers or agents shall not be responsible for the accuracy or completeness of electronic copies of this plan sheet.

T.Y. LIN / MOFFATT & NICHOL
825 BATTERY STREET
SAN FRANCISCO, CA 94111

Caltrans now has a web site! To get to the web site, go to: http://www.dot.ca.gov

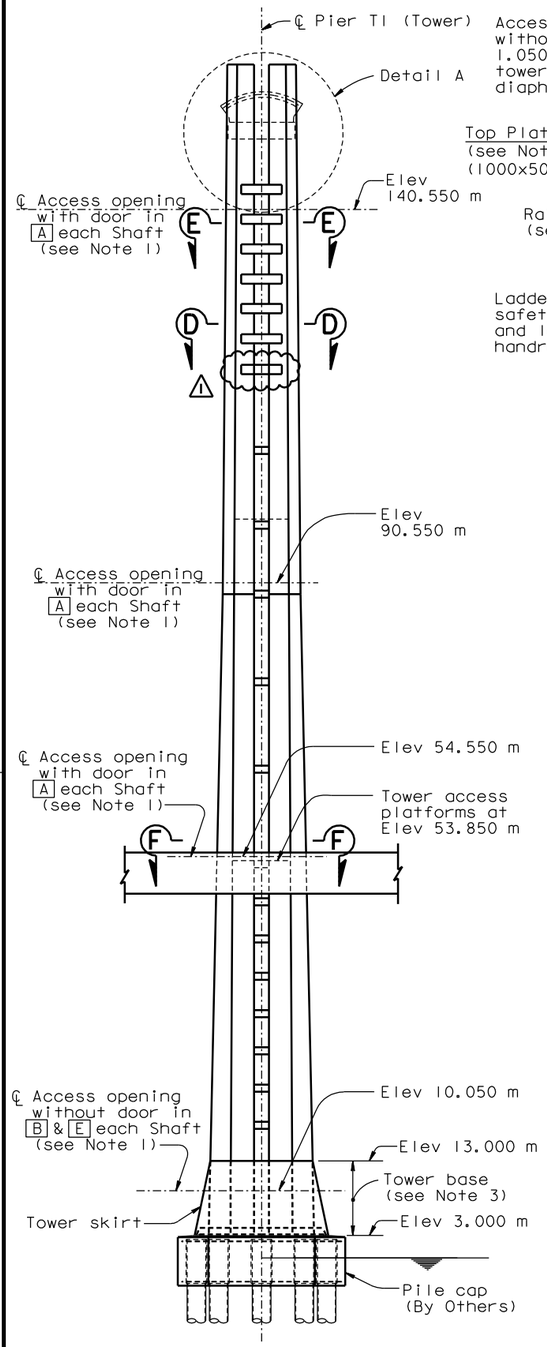

ELEVATION (Looking North)
1:400

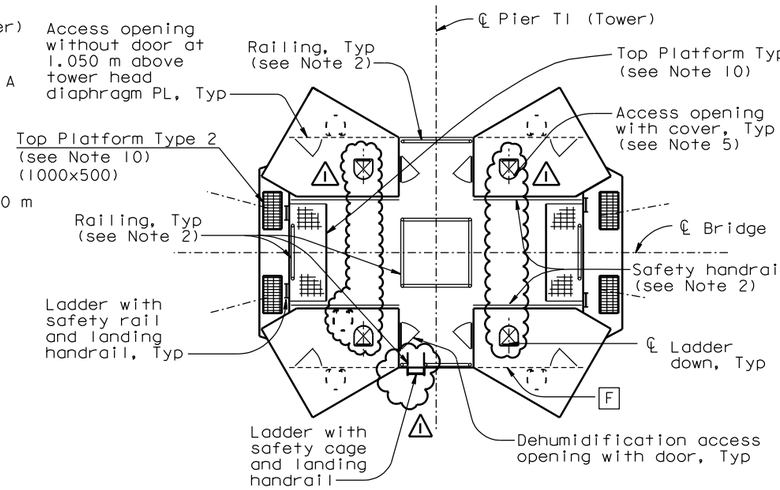

VIEW B-B (See Note 7)
1:80

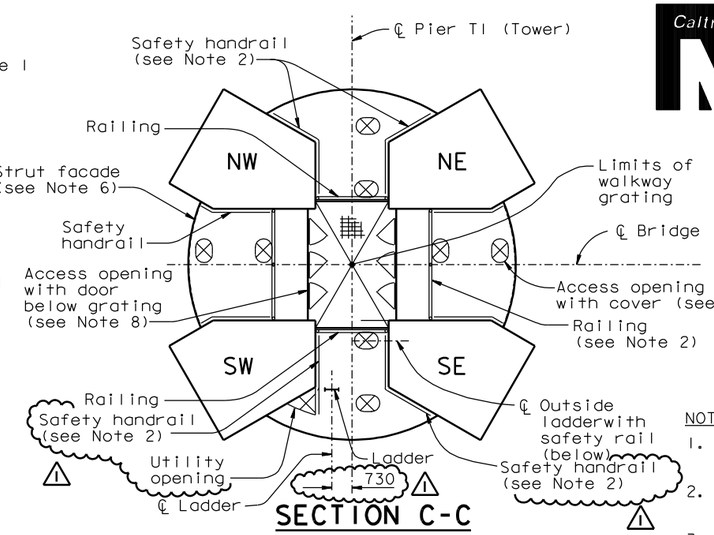

SECTION C-C
1:80

LEGEND:

Access opening (see Notes 1, 3, 8 & 14)

A Tower shaft skin plate A

NOTES:

1. For location of access openings in tower shafts, see "Tower Shaft Details" sheets.
2. For railing and safety handrail details, see "Tower Access Details No.8" sheet.
3. For additional access details in tower base, see "Tower Access Details No.2" sheet.
4. For ladder details not shown, see "Tower Access Details No.7" sheet.
5. For access opening details, see Detail E on "Tower Access Details No.8" sheet. For cover details, see "Tower Access Details No.9" sheet.
6. For strut facade, see "Tower Strut Facade Details" sheets.
7. For location of access openings in tower head, see "Tower Head Details" sheets.
8. For access opening and door details, see "Tower Access Detail No.4" sheet. Access openings are without door unless noted otherwise.
9. For Section D-D and E-E, see "Tower Access Details No.3" sheet.
10. For Top Platform Types 1 and 2, see "Tower Access Detail No.9" sheet.
11. For Section F-F, see "Tower Access Details No.10" sheet.
12. For walkway grating and support beam, see "Tower Access Details No.3" sheet.
13. For access opening cover details, see "Tower Access Details No.9" sheet.
14. For location of access openings in strut facade, see "Tower Strut Facade Details" sheets.
15. For location of saddle access opening and ladder, see "Tower Saddle Housing Details" sheets.
16. At locations where ladder lengths exceed 6.5 meters, contraction joints shall be provided. Ladder length is defined as the distance between the centerlines of the top and bottom end supports. Contraction joints shall be located below ladder supports unless noted otherwise. For contraction joint details, see "Tower Access Details No.7" sheet.
17. Ladder supports shall be spaced at 6 meters maximum.

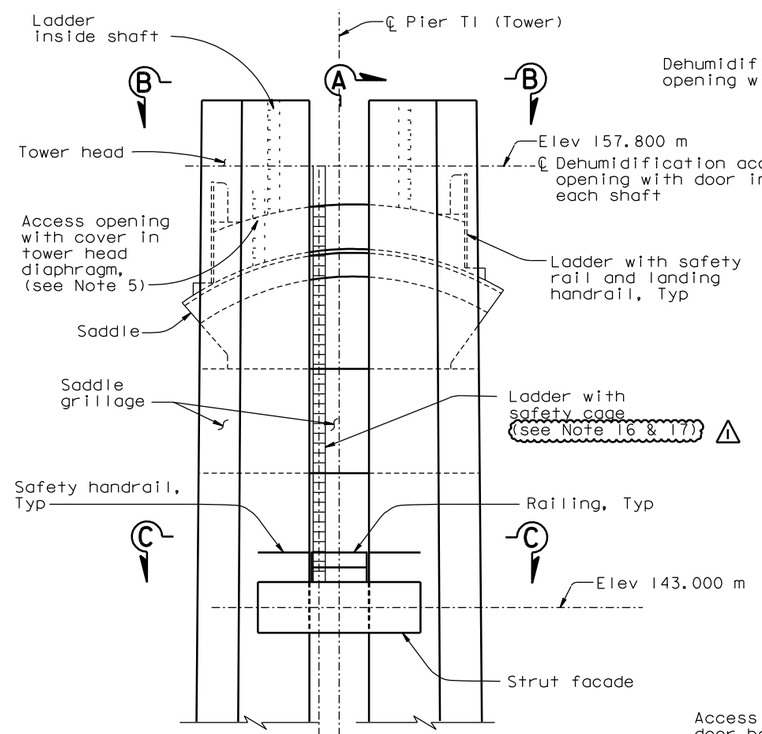

DETAIL A
1:100

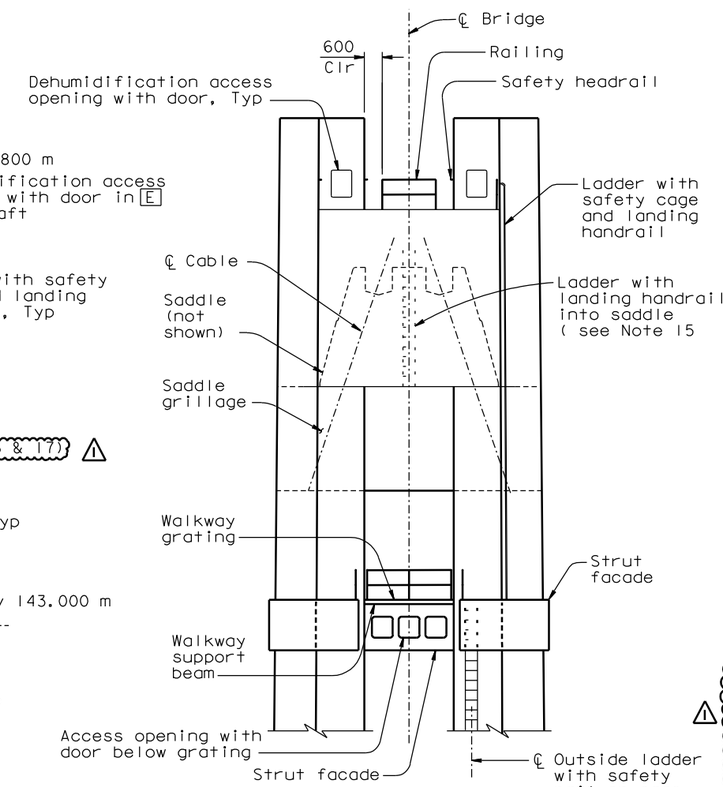

SECTION A-A
1:100

ALL DIMENSIONS ARE IN MILLIMETERS UNLESS OTHERWISE SHOWN

REQUESTS FOR INFORMATION NOT ADDRESSED IN THIS CCO REMAIN IN FORCE

MARK	DATE	DESCRIPTIONS	BY	CH'D	CCO#
1	07/18/08	TOWER ACCESS	NV	MN	65

REVISIONS

CONTRACT CHANGE ORDER NO. ____
SHEET ___ OF ___

R. Valizadeh/V. Toan/Y.L./W.L./F.C.
DESIGN OVERSIGHT
Ryan Valizadeh / Vong Toan / Y. Lu
SIGN OFF DATE 07/18/08

Rev. Date: 5-18-98

	BY	CHECKED
DESIGN	M. Nader	M. Gulyas
DETAILS	G. Baker	L. Rus
QUANTITIES	D. Turner	J. Leventini

ORIGINAL SCALE IN MILLIMETERS FOR REDUCED PLANS 0 10 20 30 40 50 60 70 80 90 100

PREPARED FOR THE STATE OF CALIFORNIA DEPARTMENT OF TRANSPORTATION

R. Manzanarez
PROJECT ENGINEER

CU 04
EA 0120F1

BRIDGE NO. 34-0006L/R
KILOMETER POST 13.2/13.9

DISREGARD PRINTS BEARING EARLIER REVISION DATES

REVISION DATES (PRELIMINARY STAGE ONLY): 05/15/99 08/02/99 05/31/01 04/08/02 07/01/02 12/13/02 10/12/04

SHEET 500R1 OF

SAN FRANCISCO OAKLAND BAY BRIDGE
EAST SPAN SEISMIC SAFETY PROJECT
SELF-ANCHORED SUSPENSION BRIDGE (SUPERSTRUCTURE & TOWER)

TOWER ACCESS DETAILS NO. 1

FILE => I:\bb\04-012001\sas\contract plans and cco\cco\in progress\cco#65\dgn\akacc06.dgn

USERNAME => ptom DATE PLOTTED => 23 JUL 2008 TIME PLOTTED => 11:08:04

100% PS&E

DIST.	COUNTY	ROUTE	KILOMETER POST TOTAL PROJECT	SHEET NO.	TOTAL SHEETS
04	SF	80	13.2/13.9	918R1	1204

Caltrans Metric

REGISTERED ENGINEER - CIVIL

12-6-04
PLANS APPROVAL DATE

REGISTERED PROFESSIONAL ENGINEER Marwan N. Nader No. C 054426 Exp. 12/31/09 CIVIL STATE OF CALIFORNIA

The State of California or its officers or agents shall not be responsible for the accuracy or completeness of electronic copies of this plan sheet.

T.Y. LIN / MOFFATT & NICHOL
825 BATTERY STREET
SAN FRANCISCO, CA 94111

Caltrans now has a web site! To get to the web site, go to: http://www.dot.ca.gov

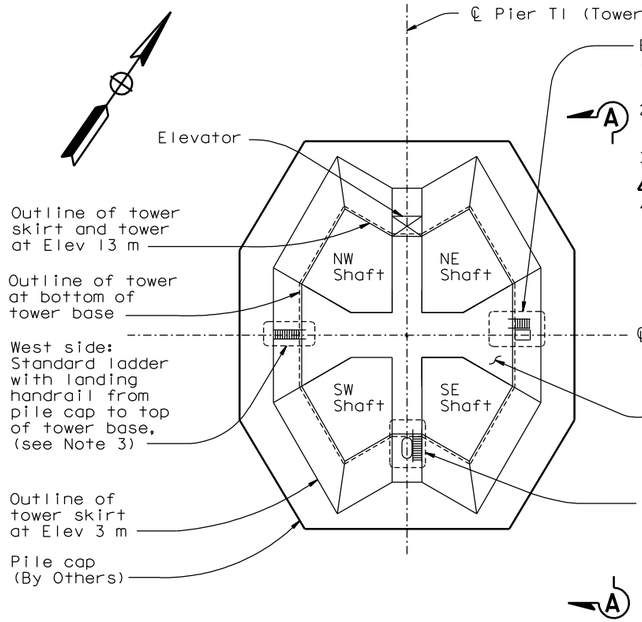

EXTERNAL PLAN VIEW AT ELEV 13.000 m

1:200

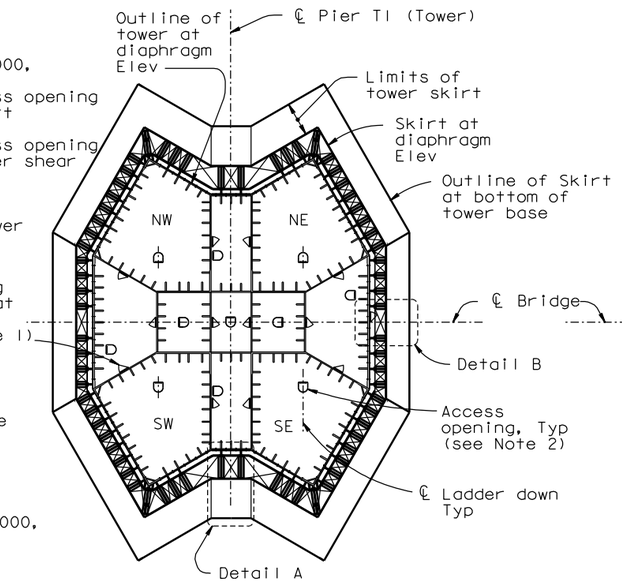

PLAN SECTION AT DIAPHRAGM AT ELEV 9.000 m

NTS

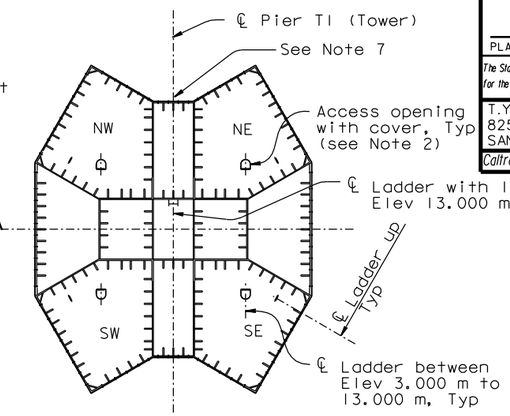

PLAN SECTION AT DIAPHRAGM AT ELEV 13.000 m

NTS

LEGEND:

- Access opening (see Note 5)
- Direction of main reinforcement of grating
- A — Tower shaft skin plate A

NOTES:

1. For access opening in tower shafts, see "Tower Shaft Details" sheets. All openings at Elev 10.050 m UNO.
2. For access opening in diaphragms, see "Tower Diaphragm Details" sheets. For access opening details see Detail E on "Tower Access Details No.8" sheet. For cover details, see "Tower Access Details No.9" sheet.
3. For ladder details not shown, see "Tower Access Details No. 7" sheet.
4. For standard platform details, see "Tower Access Details No.9" sheet.
5. For access opening and door details, see "Tower Access Details No.4" sheet. Access openings are without door, unless noted otherwise.
6. Galvanized steel grating with fasteners to be provided by Contractor. Grating working load shall be 4.8 kN/m² (100psf) unless noted otherwise.
7. For elevator landing and safety enclosures, see "Tower Elevator Support Details" sheets.

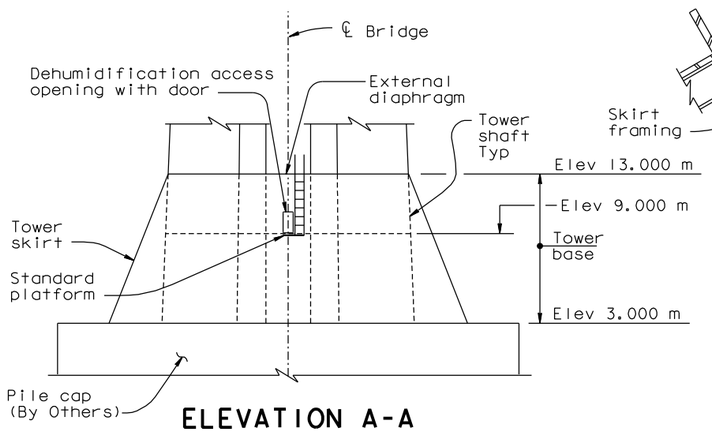

ELEVATION A-A

1:200

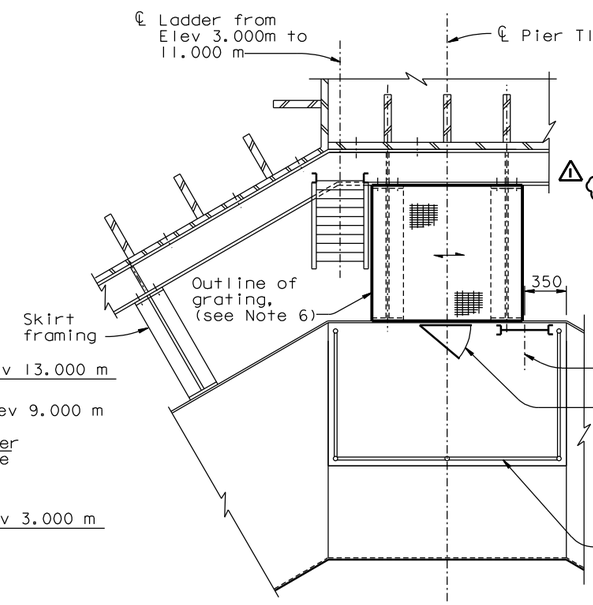

DETAIL A

1:25

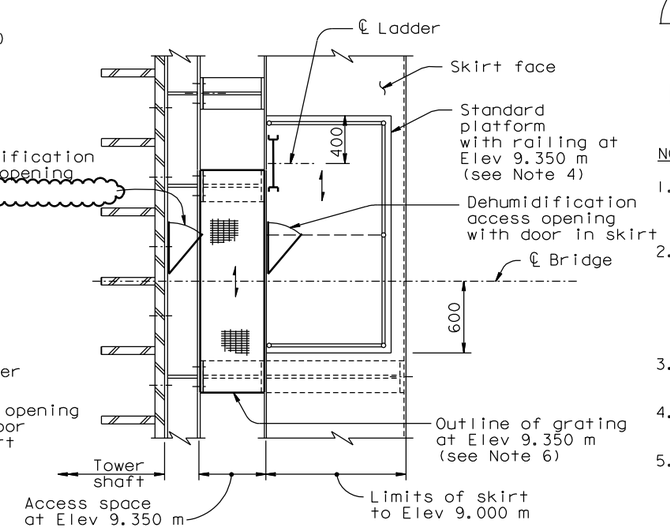

DETAIL B

1:25

ALL DIMENSIONS ARE IN MILLIMETERS UNLESS OTHERWISE SHOWN

REQUESTS FOR INFORMATION NOT ADDRESSED IN THIS CCO REMAIN IN FORCE

MARK	DATE	DESCRIPTIONS	BY	CH'D	CCO#
1	07/18/08	TOWER ACCESS	NV	MN	65

REVISIONS

CONTRACT CHANGE ORDER NO. ____
SHEET ___ OF ___

R. Valizadeh/V. Toan/Y.L./W.L./F.C.
DESIGN OVERSIGHT
Y. Lu
SIGN OFF DATE 07/18/08

Rev. Date: 5-18-98

	BY	CHECKED
DESIGN	M. Nader	M. Gulyas
DETAILS	G. Baker	L. Rus
QUANTITIES	D. Turner	J. Leventini

ORIGINAL SCALE IN MILLIMETERS FOR REDUCED PLANS 0 10 20 30 40 50 60 70 80 90 100

PREPARED FOR THE STATE OF CALIFORNIA DEPARTMENT OF TRANSPORTATION

R. Manzanarez
PROJECT ENGINEER

BRIDGE NO. 34-0006L/R
KILOMETER POST 13.2/13.9

CU 04
EA 0120F1

DISREGARD PRINTS BEARING EARLIER REVISION DATES

REVISION DATES (PRELIMINARY STAGE ONLY) 08/02/99 05/24/01 04/08/02 01/01/02 12/19/02

SHEET 501R1 OF

SAN FRANCISCO OAKLAND BAY BRIDGE
EAST SPAN SEISMIC SAFETY PROJECT
SELF-ANCHORED SUSPENSION BRIDGE
(SUPERSTRUCTURE & TOWER)

TOWER ACCESS DETAILS NO. 2

FILE => I:\bb\04-012001\sas\contract plans and cco\cco\in progress\cco#65\dgn\akacc10.dgn

USERNAME => ptom DATE PLOTTED => 23 JUL 2008 TIME PLOTTED => 11:08:43

100% PS&E

DIST.	COUNTY	ROUTE	KILOMETER POST TOTAL PROJECT	SHEET NO.	TOTAL SHEETS
04	SF	80	13.2/13.9	919R1	1204

REGISTERED ENGINEER - CIVIL

12-6-04
PLANS APPROVAL DATE

REGISTERED PROFESSIONAL ENGINEER Marwan N. Nader No. C 054426 Exp. 12/31/09 CIVIL STATE OF CALIFORNIA

The State of California or its officers or agents shall not be responsible for the accuracy or completeness of electronic copies of this plan sheet.

T.Y. LIN / MOFFATT & NICHOL
825 BATTERY STREET
SAN FRANCISCO, CA 94111

Caltrans now has a web site! To get to the web site, go to: http://www.dot.ca.gov

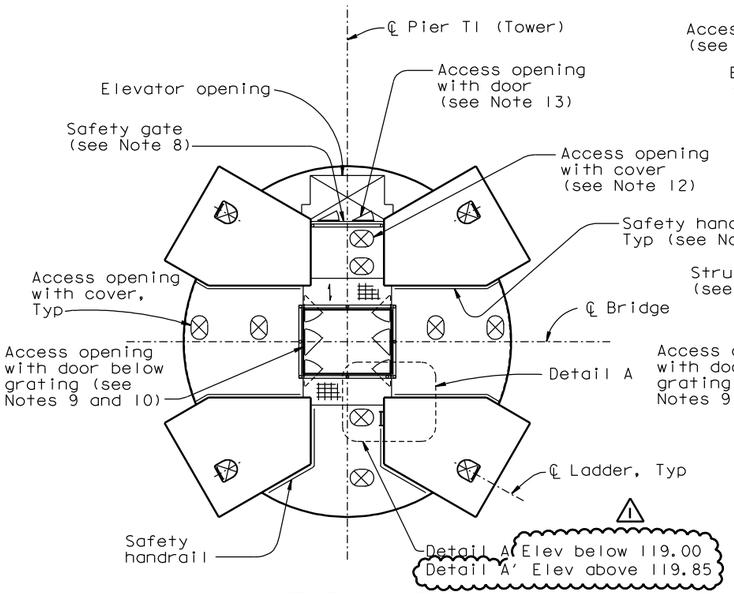

SECTION D-D
NTS

Typical for all tower strut facades UNO in Section E-E. Facade Type A is shown. Type B similar (see Notes 5 and 10)

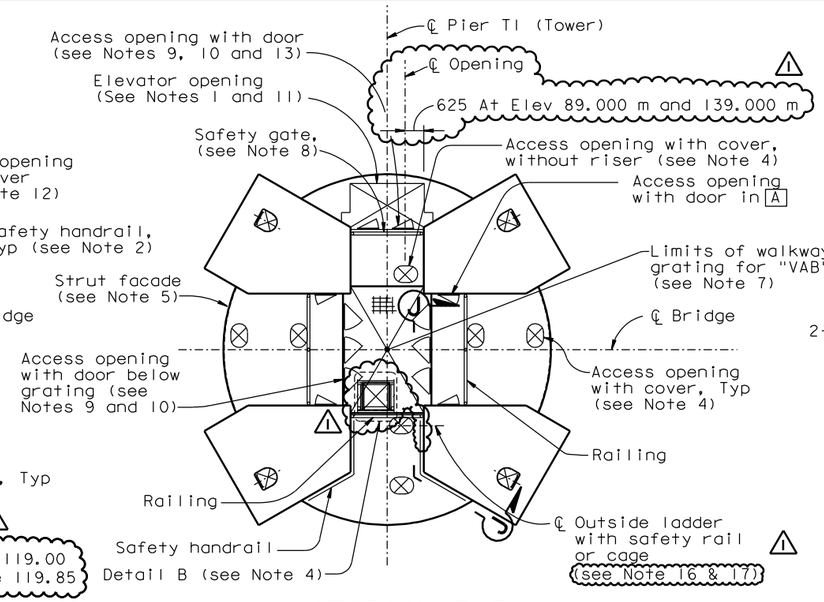

SECTION E-E
NTS

(Shown for tower strut facade corresponding to tower strut at Elev 139.000 m, safety gates and door locations at Elev 53.000 m and 89.000 m are similar)

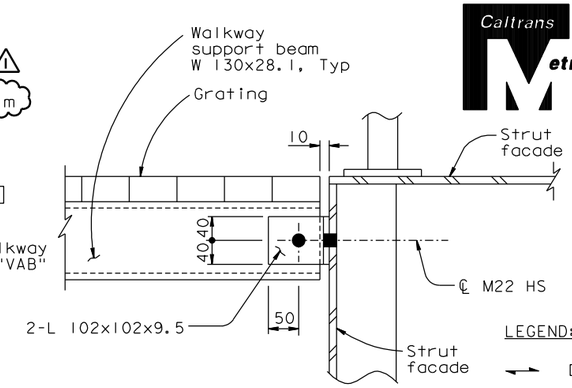

SECTION G-G
1:5

(Section G'-G' similar)

LEGEND:

- Direction of main reinforcement of grating
- Access opening
- A — Tower shaft skin plate A

NOTES:

1. For elevator opening details, see "Tower Strut Facade Details" sheets.
2. For railing and safety handrail details, see "Tower Access Details No. 8" sheet.
3. For ladder details not shown, see "Tower Access Details No. 7" sheet.
4. For Detail B and access cover details, see "Tower Access Details No. 9" sheet. All covers are with risers, unless noted otherwise.
5. For strut facade, see "Tower Strut Facade Details" sheets.
6. Galvanized steel grating with fasteners to be provided by Contractor. Grating working load shall be 4.8 kN/m² (100psf) unless noted otherwise.
7. Gratings at elevations 53.000, 89.000 and 139.000 shall support "VAB" equipment, to be supplied by others. Walkway grating for "VAB" shall be galvanized steel grating with fasteners to be provided by Contractor. Grating working load shall be 14.8 kN/m² (300psf).
8. For Safety gate details, see "Road Plans" sheets.
9. For access opening and door details, see "Tower Access Details No. 4" sheet. Access openings are without door unless noted otherwise.
10. For location of access openings in strut facade, see "Tower Strut Facade Details" sheets.
11. For location of elevator landing and safety enclosures, see "Tower Elevator Support Details" sheets.
12. This access opening is to be provided in strut facades from elevation 18.000 m to 77.000 m only.
13. These access openings are to be provided between elevation 89.000 m to 143.000 m.
14. For bottom face access opening provide door to swing in. Door shall open clear of obstructions. For other details, see door at vertical face of tower strut facade on "Tower Access Details No. 4" sheet.
15. The Contractor shall provide ladders inside the front facades to align with the exterior ladder segments. Ladder do not penetrate the strut facade plates.

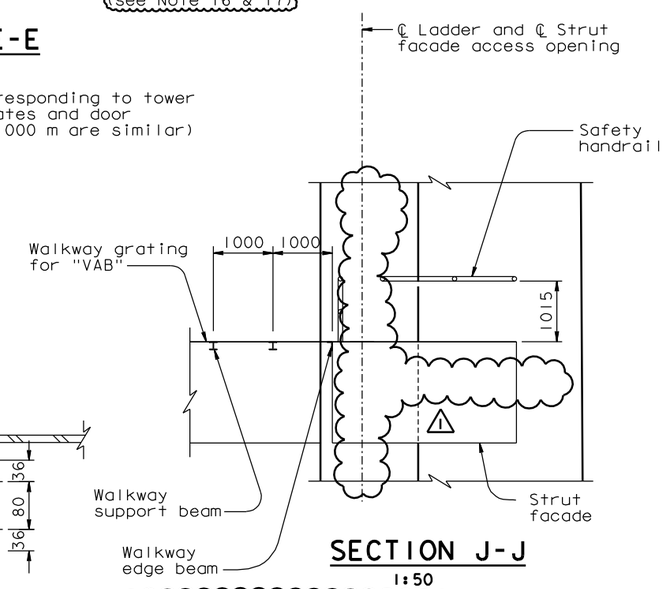

SECTION J-J
1:50

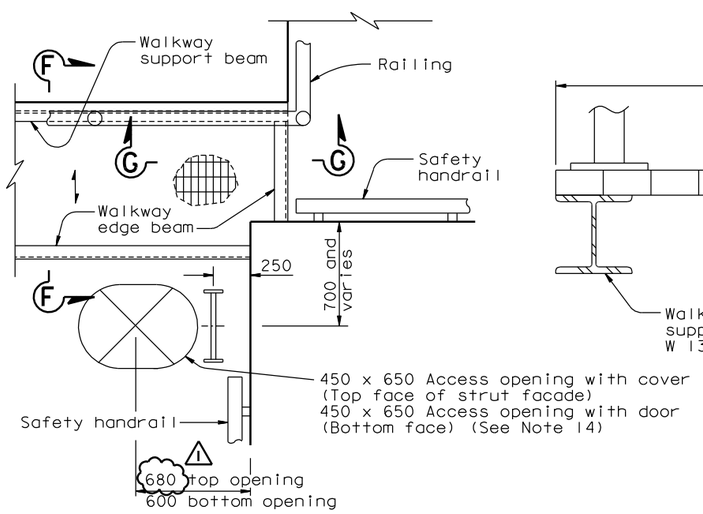

DETAIL A
1:20

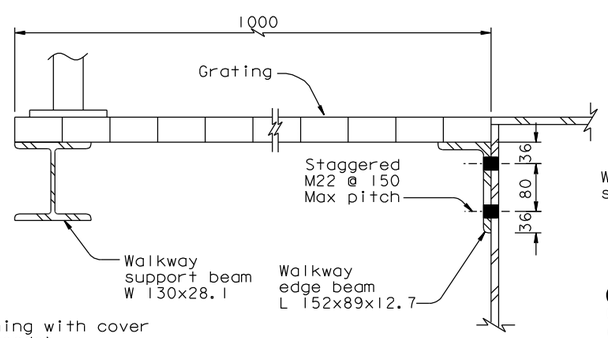

SECTION F-F
1:5

16. At locations where ladder lengths exceed 6.5 meters, contraction joints shall be provided. Ladder length is defined as the distance between the centerlines of the top and bottom end supports. Contraction joints shall be located below ladder supports unless noted otherwise. For contraction joint details, see "Tower Access Details No. 7" sheet.
17. Ladder supports shall be spaced at 6 meters maximum.
18. For Section Z-Z and Detail A', see "Tower Access Details No. 3A" sheet.

ALL DIMENSIONS ARE IN MILLIMETERS UNLESS OTHERWISE SHOWN

REQUESTS FOR INFORMATION NOT ADDRESSED IN THIS CCO REMAIN IN FORCE

MARK	DATE	DESCRIPTIONS	BY	CH'D	CCO#
1	07/18/08	TOWER ACCESS	NV	MN	65

REVISIONS

CONTRACT CHANGE ORDER NO. ____
SHEET ___ OF ___

R. Valizadeh/V. Toan/Y.L./W.L./F.C.
DESIGN OVERSIGHT
Roya Valizadeh / Vong P. Toan / Y. Liu
SIGN OFF DATE 07/18/08

Rev. Date: 5-18-98

	BY	CHECKED
DESIGN	M. Nader	M. Guiyas
DETAILS	G. Baker	L. Rus
QUANTITIES	D. Turner	J. Leventini

PREPARED FOR THE STATE OF CALIFORNIA DEPARTMENT OF TRANSPORTATION

R. Manzanarez
PROJECT ENGINEER

BRIDGE NO. 34-0006L/R
KILOMETER POST 13.2/13.9

SAN FRANCISCO OAKLAND BAY BRIDGE
EAST SPAN SEISMIC SAFETY PROJECT
SELF-ANCHORED SUSPENSION BRIDGE (SUPERSTRUCTURE & TOWER)

TOWER ACCESS DETAILS NO. 3

ORIGINAL SCALE IN MILLIMETERS FOR REDUCED PLANS 0 10 20 30 40 50 60 70 80 90 100

CU 04
EA 0120F1

DISREGARD PRINTS BEARING EARLIER REVISION DATES

REVISION DATES (PRELIMINARY STAGE ONLY): 05/15/99 08/20/99 05/24/01 01/08/02 07/24/02 12/19/02

SHEET 502R1 OF

FILE => I:\bb\04-01200\sas\contract plans and cco\cco\in progress\cco#65\dgn\akacc14.dgn

USERNAME => ptom DATE PLOTTED => 23 JUL 2008 TIME PLOTTED => 11:09:21

100% PS&E

DIST.	COUNTY	ROUTE	KILOMETER POST TOTAL PROJECT	SHEET NO.	TOTAL SHEETS
04	SF	80	13.2/13.9	919S1	1204

Caltrans Metric

REGISTERED ENGINEER - CIVIL

05-09-08
PLANS APPROVAL DATE

REGISTERED PROFESSIONAL ENGINEER Marwan N. Nader No. C 054426 Exp. 12/31/09 CIVIL STATE OF CALIFORNIA

The State of California or its officers or agents shall not be responsible for the accuracy or completeness of electronic copies of this plan sheet.

T.Y. LIN / MOFFATT & NICHOL
825 BATTERY STREET
SAN FRANCISCO, CA 94111

Caltrans now has a web site! To get to the web site, go to: http://www.dot.ca.gov

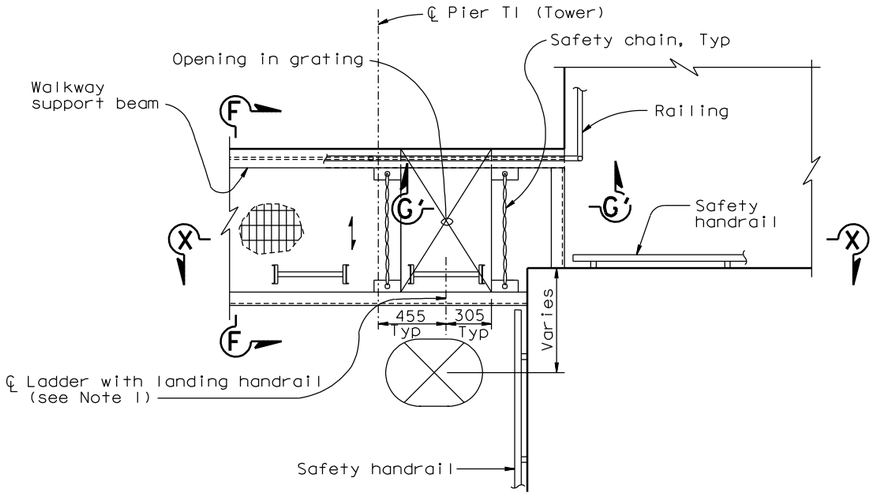

DETAIL A'
1:20

(Elev 135.850 shown, other applicable Elevations similar)

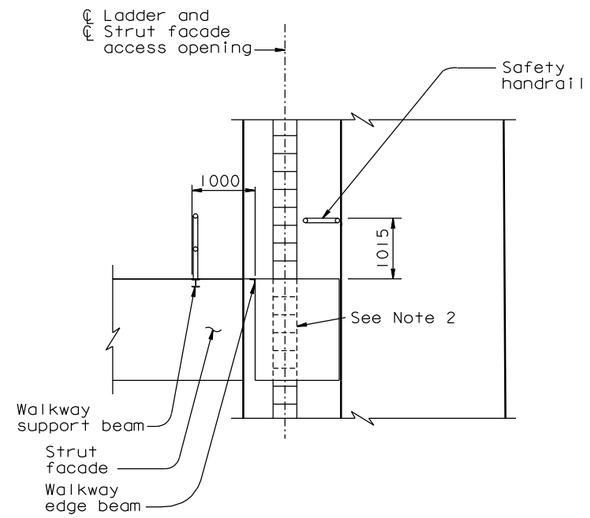

SECTION Z-Z
1:50

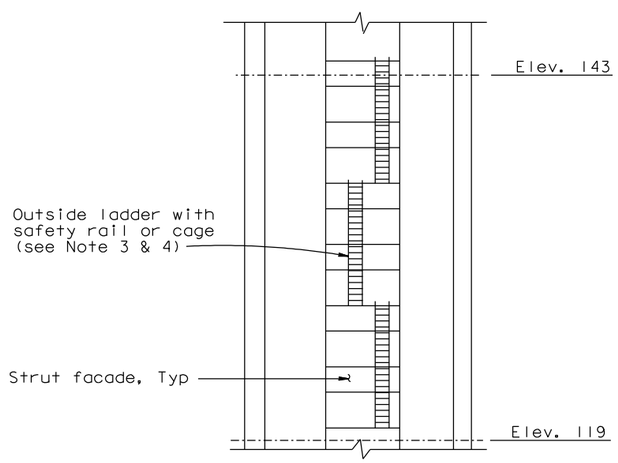

SECTION X-X
NTS

REQUESTS FOR INFORMATION NOT ADDRESSED IN THIS CCO REMAIN IN FORCE

MARK	DATE	DESCRIPTIONS	BY	CH'D	CCO#
0	07/18/08	TOWER ACCESS	NV	MN	65

REVISIONS

CONTRACT CHANGE ORDER NO. _____
SHEET ____ OF ____

NOTES:

1. For landing handrail and ladder details, see "Tower Access Details No. 7" sheet.
2. The Contractor shall provide ladders inside the front facades to align with the exterior ladder segments. Ladders do not penetrate the strut facade plates.
3. At locations where ladder lengths exceed 6.5 meters, contraction joints shall be provided. Ladder length is defined as the distance between the centerlines of the top and bottom end supports. Contraction joints shall be located below ladder supports unless noted otherwise. For contraction joint details, see "Tower Access Details No. 7" sheet.
4. Ladder supports shall be spaced at 6 meters maximum.

ALL DIMENSIONS ARE IN MILLIMETERS UNLESS OTHERWISE SHOWN

SAN FRANCISCO OAKLAND BAY BRIDGE
EAST SPAN SEISMIC SAFETY PROJECT
SELF-ANCHORED SUSPENSION BRIDGE
(SUPERSTRUCTURE & TOWER)

TOWER ACCESS DETAILS NO. 3A

R. Valizadeh/V. Toan/Y.L./W.L./F.C.
DESIGN OVERSIGHT
SIGN OFF DATE 07/18/08

	BY	CHECKED
DESIGN	G. Baker	D. Hirschfeld
DETAILS	D. Hirschfeld	H. Tazir
QUANTITIES	D. Hirschfeld	H. Tazir

PREPARED FOR THE STATE OF CALIFORNIA DEPARTMENT OF TRANSPORTATION

R. Manzanarez
PROJECT ENGINEER

BRIDGE NO. 34-0006L/R
KILOMETER POST 13.2/13.9

CU 04
EA 0120F1

DISREGARD PRINTS BEARING EARLIER REVISION DATES 07/18/08

SHEET 502S1 OF

Rev. Date: 5-18-98

ORIGINAL SCALE IN MILLIMETERS FOR REDUCED PLANS 0 10 20 30 40 50 60 70 80 90 100

FILE => I:\bb\04-012001\sas\contract plans and cco\cco\in progress\cco#65\dgn\akacc14a.dgn

100% PS&E

DATE PLOTTED => 23 JUL 2008 TIME PLOTTED => 13:10:30

USERNAME => ptom

DIST.	COUNTY	ROUTE	KILOMETER POST TOTAL PROJECT	SHEET NO.	TOTAL SHEETS
04	SF	80	13.2/13.9	920R2	1204

REGISTERED ENGINEER - CIVIL

12-6-04
PLANS APPROVAL DATE

REGISTERED PROFESSIONAL ENGINEER Marwan N. Nader No. C 054426 Exp. 12/31/09 CIVIL STATE OF CALIFORNIA

The State of California or its officers or agents shall not be responsible for the accuracy or completeness of electronic copies of this plan sheet.

T.Y. LIN / MOFFATT & NICHOL
825 BATTERY STREET
SAN FRANCISCO, CA 94111

Caltrans now has a web site! To get to the web site, go to: http://www.dot.ca.gov

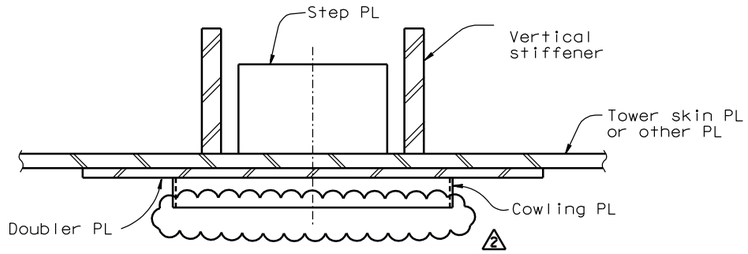

SECTION B-B
1:10

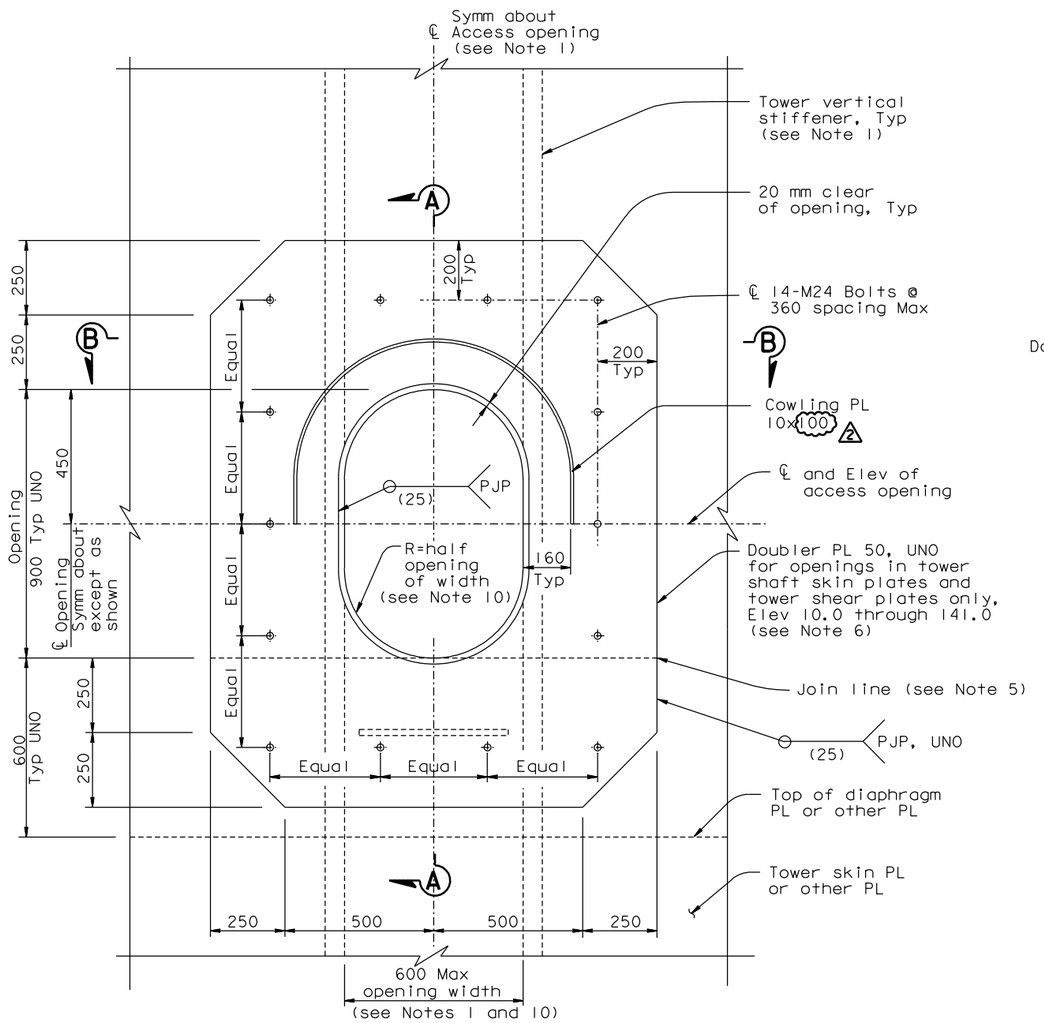

ACCESS OPENING DETAIL
1:10

(see Note 6)
(Dehumidification access opening similar)

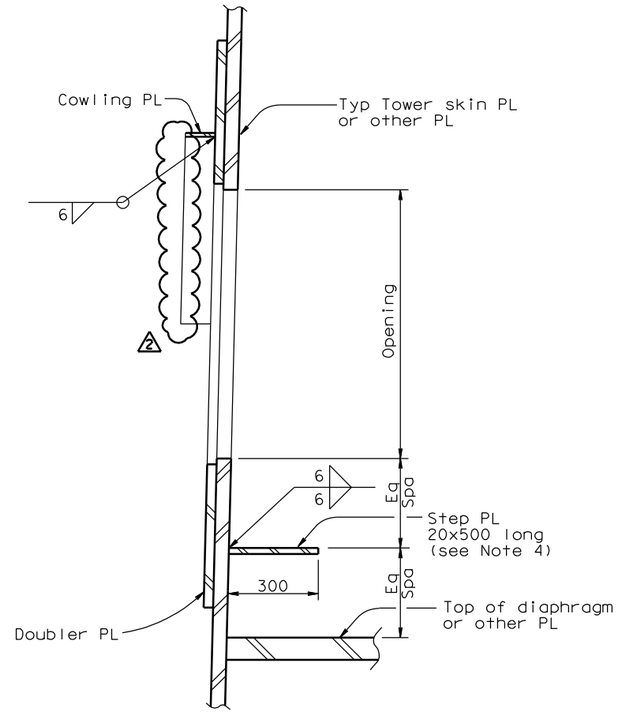

SECTION A-A
1:10

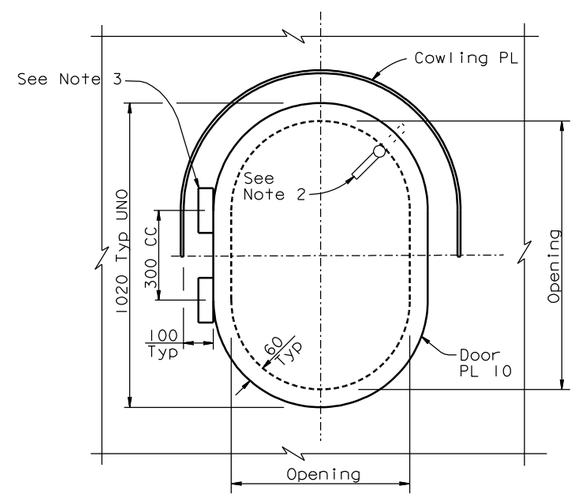

ACCESS OPENING DOOR DETAIL
1:10

(Dehumidification access opening door similar)

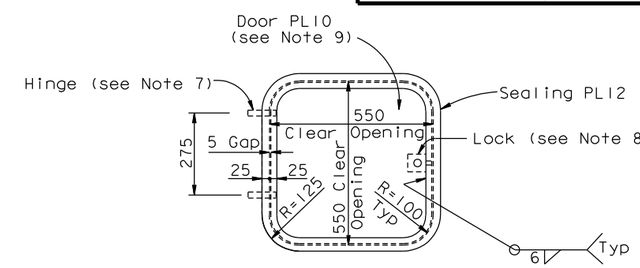

ACCESS OPENING WITH DOOR AT VERTICAL FACE OF TOWER STRUT FACADE
1:10

NOTES:

1. Width of opening is limited to clear distance between stiffeners. For location of access opening and stiffener spacing in tower, see "Tower Shaft Details" sheets.
2. Doors shall be secured by cam locks with locking L-handles and interior release.
3. Door hinges shall be stainless lift-off type with 16 mm pin size 150 kg rated capacity per hinge.
4. Use step PL where door sill is greater than 500 above landing.
5. For access openings at elevations 54.550, 90.550 and 140.550 omit doubler PL below join line. Connect upper portion to strut doubler PL using CJP welds at join line. For strut doubler PL, see "Tower Strut Details" sheets.
6. Access opening shown is for openings in tower shaft skin plates and shear plates. Access opening in tower skirt and tower head are similar. The doubler PL shall match the thickness of the penetrated skirt or tower head PL and shall be connected with a PJP weld 8 mm.
7. Contractor shall provide internally mounted pivot hinges. No part of hinge shall protrude beyond the outside surface of door or facade when door is closed. Hinges shall permit door to swing outwards at least 120°. Each hinge shall be rated to resist 900 N in any direction.
8. Contractor shall provide through-hole mounted cam lock with key. Lock shall be flush with outside face of door.
9. Door shall be flush with outside face of facade. Edges of door shall be sealed with 5x20 Neoprene seals.
10. Dehumidification access openings shall have R=50 mm typical. Dehumidification access openings at tower head only shall be 680 mm x 900 mm.

ALL DIMENSIONS ARE IN MILLIMETERS UNLESS OTHERWISE SHOWN

REQUESTS FOR INFORMATION NOT ADDRESSED IN THIS CCO REMAIN IN FORCE

MARK	DATE	DESCRIPTIONS	BY	CH'D	CCO#
2	08/15/08	TOWER ACCESS	MN	NV	65
1	07/11/08	TOWER STRUT FACADES AND CROSS BRACING	MN	NV	64

REVISIONS

CONTRACT CHANGE ORDER NO. ____
SHEET ___ OF ___

R. Valizadeh/V. Toan/Y.L./W.L./F.C.
DESIGN OVERSIGHT
SIGN OFF DATE 08/15/08

Rev. Date: 5-18-98

DESIGN	BY M. Nader	CHECKED M. Gulyas	
DETAILS	BY G. Baker	CHECKED L. Rus	
QUANTITIES	BY D. Turner	CHECKED J. Leventini	

PREPARED FOR THE STATE OF CALIFORNIA DEPARTMENT OF TRANSPORTATION

R. Manzanarez
PROJECT ENGINEER

BRIDGE NO. 34-0006L/R
KILOMETER POST 13.2/13.9

SAN FRANCISCO OAKLAND BAY BRIDGE
EAST SPAN SEISMIC SAFETY PROJECT
SELF-ANCHORED SUSPENSION BRIDGE
(SUPERSTRUCTURE & TOWER)

TOWER ACCESS DETAILS NO. 4

ORIGINAL SCALE IN MILLIMETERS FOR REDUCED PLANS 0 10 20 30 40 50 60 70 80 90 100

CU 04
EA 0120F1

DISREGARD PRINTS BEARING EARLIER REVISION DATES

REVISION DATES (PRELIMINARY STAGE ONLY): 01/15/99 05/14/99 08/06/99 05/31/01 04/08/02 07/09/02 12/19/02

SHEET 503R2 OF

FILE => I:\bb\04-012001\sas\contract plans and cco\cco\in progress\cco#65\dgn\akacc05a.dgn

100% PS&E

USERNAME => dwinrow DATE PLOTTED => 13 AUG 2008 TIME PLOTTED => 16:44:50

DIST.	COUNTY	ROUTE	KILOMETER POST TOTAL PROJECT	SHEET NO.	TOTAL SHEETS
04	SF	80	13.2/13.9	921R1	1204

Caltrans Metric

REGISTERED ENGINEER - CIVIL

12-6-04
PLANS APPROVAL DATE

REGISTERED PROFESSIONAL ENGINEER Marwan N. Nader No. C 054426 Exp. 12/31/09 CIVIL STATE OF CALIFORNIA

The State of California or its officers or agents shall not be responsible for the accuracy or completeness of electronic copies of this plan sheet.

T.Y. LIN / MOFFATT & NICHOL
825 BATTERY STREET
SAN FRANCISCO, CA 94111

Caltrans now has a web site! To get to the web site, go to: http://www.dot.ca.gov

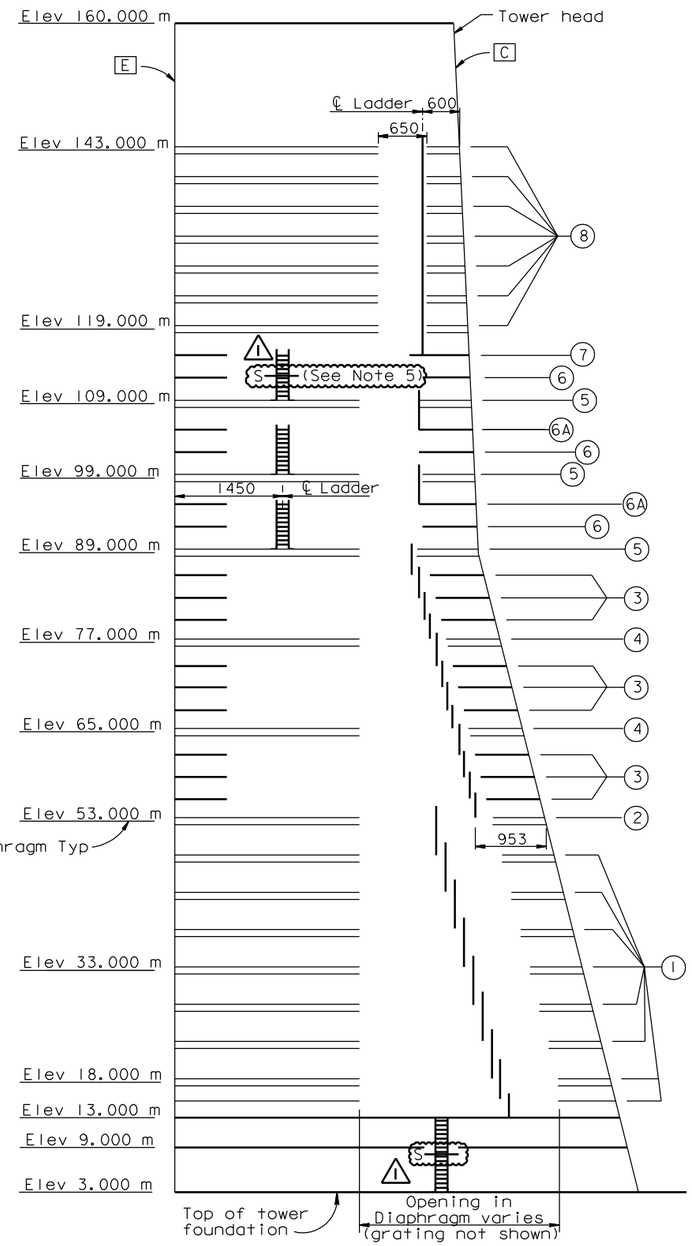

LADDER LAYOUT
SECTION A-A
Vertical 1:400
Horizontal 1:40

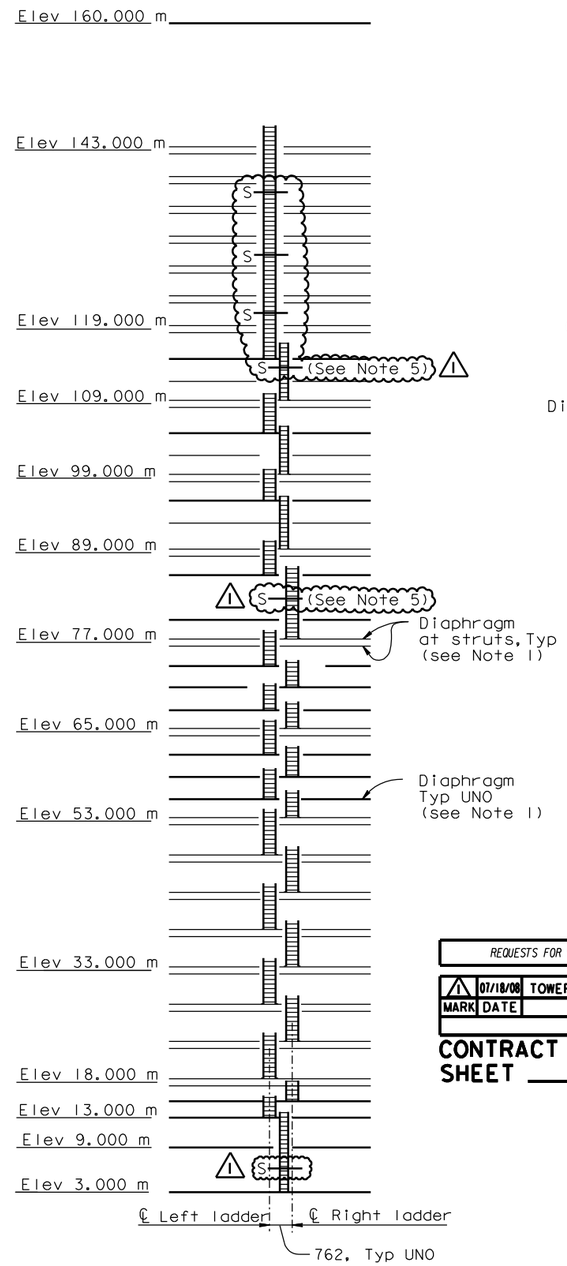

SECTION B-B
Vertical 1:400
Horizontal 1:100

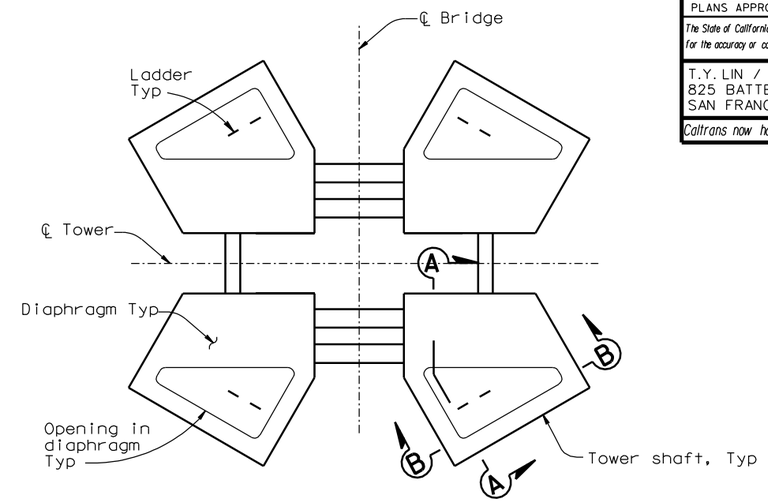

KEY PLAN
1:100
(Ladder platform Type 1 shown)

LEGEND:

(8) Ladder platform Type 8

[A] Tower Skin Plate A

⚠1 S Location of ladder contraction joint (see Note 3)

NOTES:

1. Elevations shown are given at CL diaphragm unless noted otherwise. For detail of diaphragms, see "Tower Diaphragm Details" sheets.
2. For details of ladder platforms, see "Tower Access Details No.6" sheet.
3. ⚠1 At locations where ladder lengths exceed 6.5 meters, contraction joints shall be provided. Ladder length is defined as the distance between the centerlines of the top and bottom end supports. Contraction joints shall be located below ladder supports unless noted otherwise. For contraction joint details, see "Tower Access Details No.7" sheet.
4. Ladder supports shall be spaced at 6 meters maximum.
5. Contraction joint shall be located above ladder supports at these locations.

REQUESTS FOR INFORMATION NOT ADDRESSED IN THIS CCO REMAIN IN FORCE

MARK	DATE	DESCRIPTIONS	BY	CH'D	CCO#
1	07/18/08	TOWER ACCESS	NV	MN	65

REVISIONS

CONTRACT CHANGE ORDER NO. _____
SHEET ___ OF ___

ALL DIMENSIONS ARE IN MILLIMETERS UNLESS OTHERWISE SHOWN

R. Valizadeh/V. Toan/Y.L./W.L./F.C.
DESIGN OVERSIGHT
Roya Valizadeh / Vong Toan / Y. Liu
SIGN OFF DATE 07/18/08

	BY	CHECKED
DESIGN	M. Nader	M. Gulyas
DETAILS	G. Baker	L. Rus
QUANTITIES	D. Turner	J. Leventini

PREPARED FOR THE STATE OF CALIFORNIA DEPARTMENT OF TRANSPORTATION

R. Manzanarez
PROJECT ENGINEER

BRIDGE NO. 34-0006L/R
KILOMETER POST 13.2/13.9

SAN FRANCISCO OAKLAND BAY BRIDGE
EAST SPAN SEISMIC SAFETY PROJECT
SELF-ANCHORED SUSPENSION BRIDGE (SUPERSTRUCTURE & TOWER)

TOWER ACCESS DETAILS NO.5

Rev. Date: 5-18-98

ORIGINAL SCALE IN MILLIMETERS FOR REDUCED PLANS 0 10 20 30 40 50 60 70 80 90 100

CU 04
EA 0120F1

DISREGARD PRINTS BEARING EARLIER REVISION DATES

REVISION DATES (PRELIMINARY STAGE ONLY): 05/15/99 08/02/99 05/31/01 04/08/02 07/01/02 12/19/02

SHEET 504R1 OF

FILE => I:\bb\04-012001\sas\contract plans and cco\cco\in progress\cco#65\dgn\akacc08.dgn

100% PS&E

DATE PLOTTED => 23 JUL 2008 TIME PLOTTED => 13:15:34

USERNAME => ptom

DIST.	COUNTY	ROUTE	KILOMETER POST TOTAL PROJECT	SHEET NO.	TOTAL SHEETS
04	SF	80	13.2/13.9	923R1	1204

Caltrans Metric

REGISTERED ENGINEER - CIVIL

12-6-04
PLANS APPROVAL DATE

REGISTERED PROFESSIONAL ENGINEER Marwan N. Nader No. C 054426 Exp. 12/31/09 CIVIL STATE OF CALIFORNIA

The State of California or its officers or agents shall not be responsible for the accuracy or completeness of electronic copies of this plan sheet.

T.Y. LIN / MOFFATT & NICHOL
825 BATTERY STREET
SAN FRANCISCO, CA 94111

Caltrans now has a web site! To get to the web site, go to: http://www.dot.ca.gov

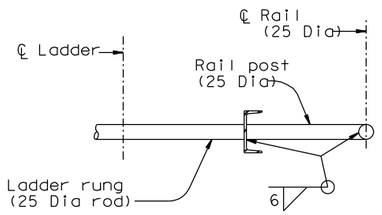

SECTION D-D
1:5

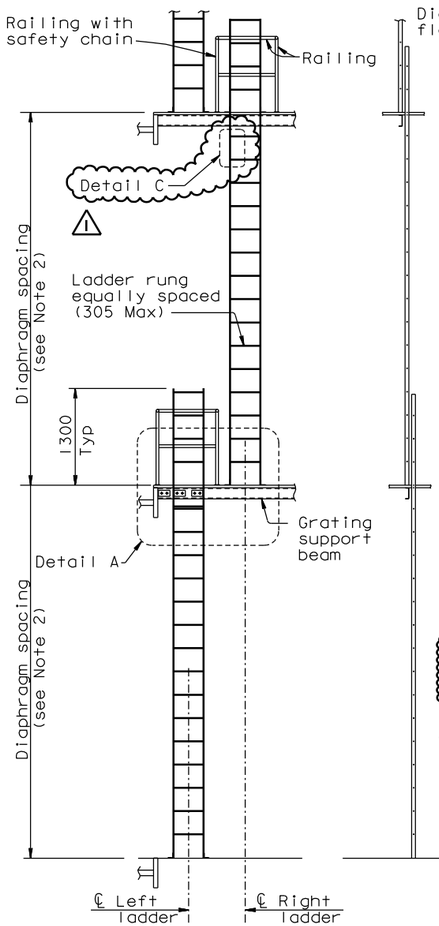

FRONT VIEW SIDE VIEW

TYPICAL LADDER DETAIL
(Shown for ladder platform Type 1, see Note 3)
1:40

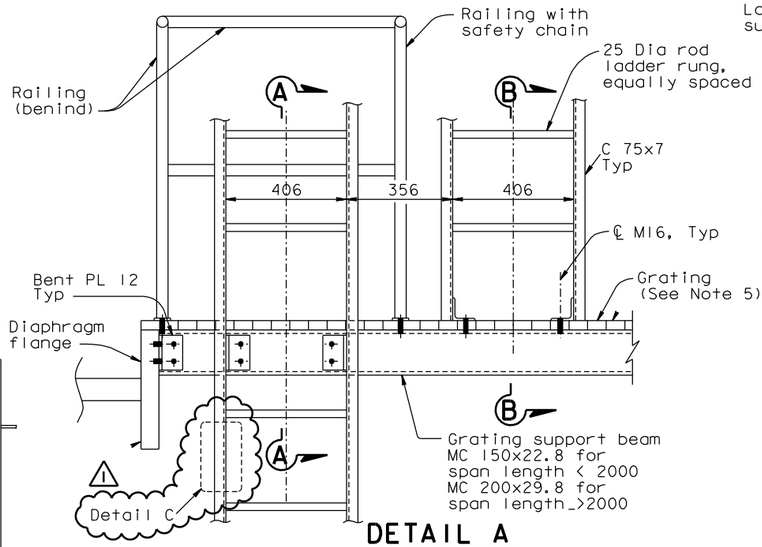

DETAIL A
1:10

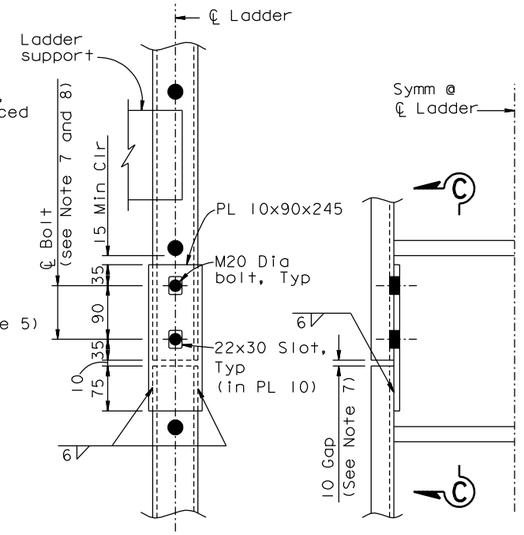

SECTION C-C DETAIL C

TYPICAL LADDER CONTRACTION JOINT DETAIL
1:5

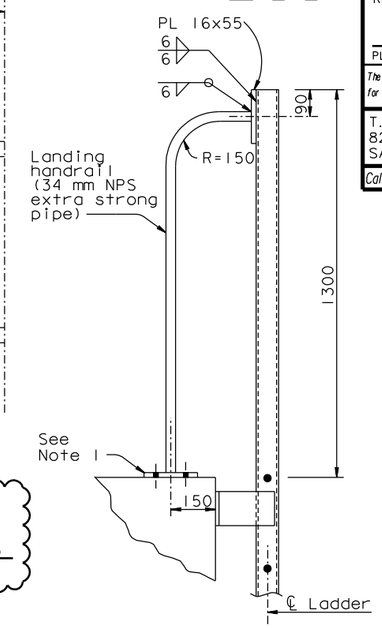

LANDING HANDRAIL DETAIL
1:10

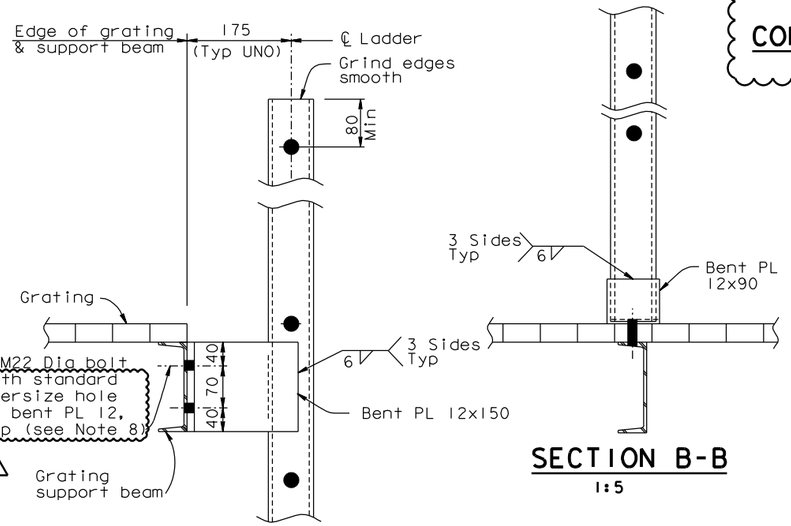

SECTION A-A
1:5

SECTION B-B
1:5

TYPICAL LADDER CONNECTIONS TO SUPPORT BEAM

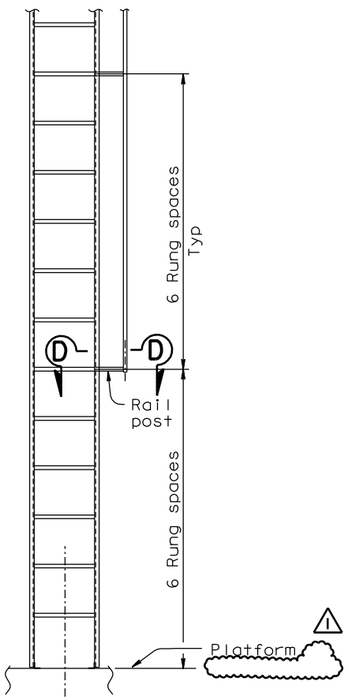

ELEVATION VIEW WITH LADDER AND SAFETY RAIL
1:20 (see Note 4)

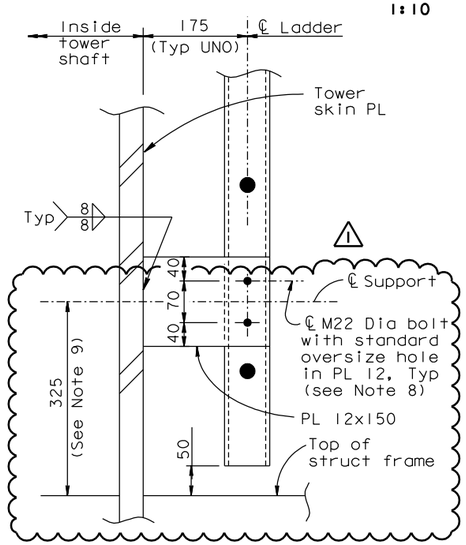

TYPICAL LADDER CONNECTIONS TO TOWER FACE
1:5

ALL DIMENSIONS ARE IN MILLIMETERS UNLESS OTHERWISE SHOWN

NOTES:

1. For railing base plate details, see "Tower Access Details No. 8" sheet.
2. For diaphragm spacing, see "Tower Diaphragm Details" sheets.
3. Ladder connections vary. For typical ladder connections to diaphragm flange, see "Tower Access Details No. 8" sheet.
4. For ladder runs longer than 10.00 m, safety cage shall be provided around ladder. For safety cage details, see "Tower Access Details No. 16" sheet.
5. Galvanized steel grating with fasteners to be provided by Contractor. Grating working load shall be 4.8 kN/m² (100 psf).

7. Bolts shall be centered in the vertical slotted holes and the 10 mm gap shall be maintained prior to load transfer.
8. Bolts shall be installed snug-tight prior to load transfer and fully tensioned after load transfer.
9. At the Contractor's option, dimension may be adjusted to ensure ladder support is located between the first and second ladder rungs.

REQUESTS FOR INFORMATION NOT ADDRESSED IN THIS CCO REMAIN IN FORCE

MARK	DATE	DESCRIPTIONS	BY	CH'D	CCO#
1	08/15/08	TOWER ACCESS	NV	MN	65

REVISIONS

CONTRACT CHANGE ORDER NO. ____
SHEET ___ OF ___

R. Valizadeh/V. Toan/Y.L./W.L./F.C.
DESIGN OVERSIGHT
SIGN OFF DATE 08/15/08

Rev. Date: 5-18-98

DESIGN	BY M. Nader	CHECKED M. Gulyas	
DETAILS	BY G. Baker	CHECKED L. Rus	
QUANTITIES	BY D. Turner	CHECKED J. Leventini	

PREPARED FOR THE STATE OF CALIFORNIA DEPARTMENT OF TRANSPORTATION

R. Manzanarez
PROJECT ENGINEER

BRIDGE NO. 34-0006L/R
KILOMETER POST 13.2/13.9

SAN FRANCISCO OAKLAND BAY BRIDGE
EAST SPAN SEISMIC SAFETY PROJECT
SELF-ANCHORED SUSPENSION BRIDGE (SUPERSTRUCTURE & TOWER)

TOWER ACCESS DETAILS NO. 7

ORIGINAL SCALE IN MILLIMETERS FOR REDUCED PLANS 0 10 20 30 40 50 60 70 80 90 100

CU 04
EA 0120F1

DISREGARD PRINTS BEARING EARLIER REVISION DATES

REVISION DATES (PRELIMINARY STAGE ONLY) 05/15/99 08/02/99 05/31/01 04/08/02 07/01/02 12/19/02

SHEET 506R1 OF

FILE => I:\bb\04-012001\sas\contract plans and cco\cco\in progress\cco#65\dgn\akacc08b.dgn

USERNAME => dwinrow DATE PLOTTED => 13 AUG 2008 TIME PLOTTED => 16:48:41

100% PS&E

REQUESTS FOR INFORMATION NOT ADDRESSED IN THIS CCO REMAIN IN FORCE

MARK	DATE	DESCRIPTIONS	BY	CH'D	CCO#
1	07/18/08	TOWER ACCESS	NV	MN	65

REVISIONS

CONTRACT CHANGE ORDER NO. ____
SHEET ___ OF ___

DIST.	COUNTY	ROUTE	KILOMETER POST TOTAL PROJECT	SHEET NO.	TOTAL SHEETS
04	SF	80	13.2/13.9	924R1	1204

Caltrans Metric

REGISTERED ENGINEER - CIVIL
12-6-04
PLANS APPROVAL DATE

REGISTERED PROFESSIONAL ENGINEER Marwan N. Nader No. C 054426 Exp. 12/31/09 CIVIL STATE OF CALIFORNIA

The State of California or its officers or agents shall not be responsible for the accuracy or completeness of electronic copies of this plan sheet.

T.Y. LIN / MOFFATT & NICHOL
825 BATTERY STREET
SAN FRANCISCO, CA 94111

Caltrans now has a web site! To get to the web site, go to: http://www.dot.ca.gov

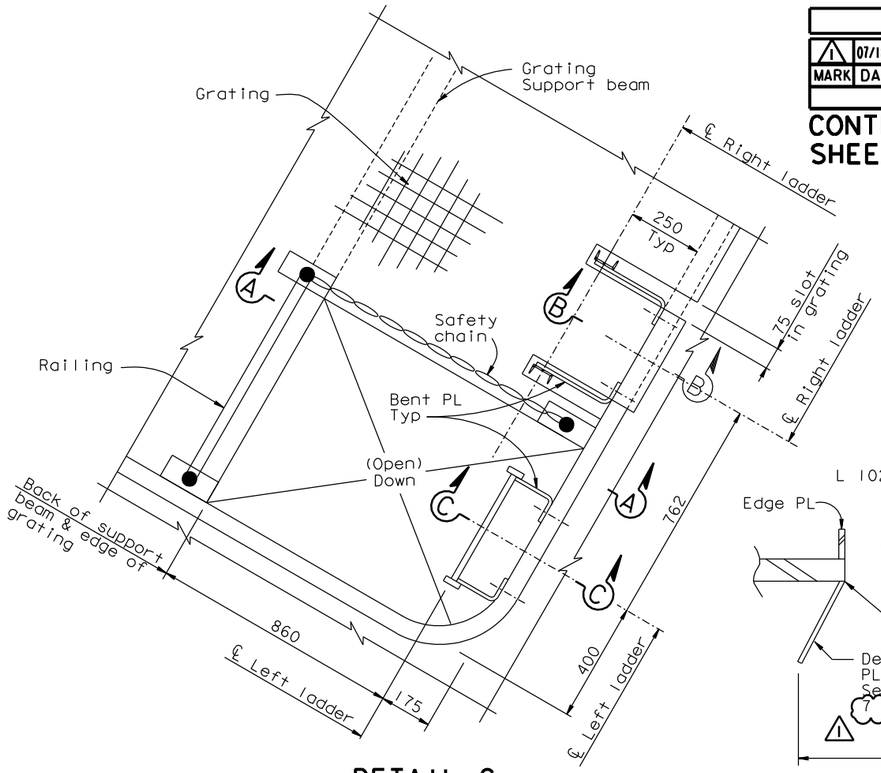

DETAIL C
1:10

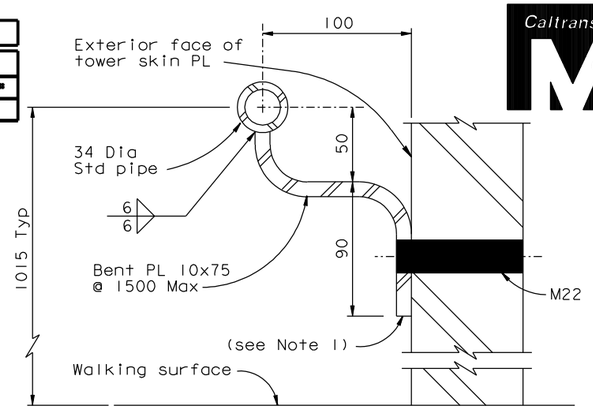

SAFETY HANDRAIL TYPICAL DETAIL
1:2

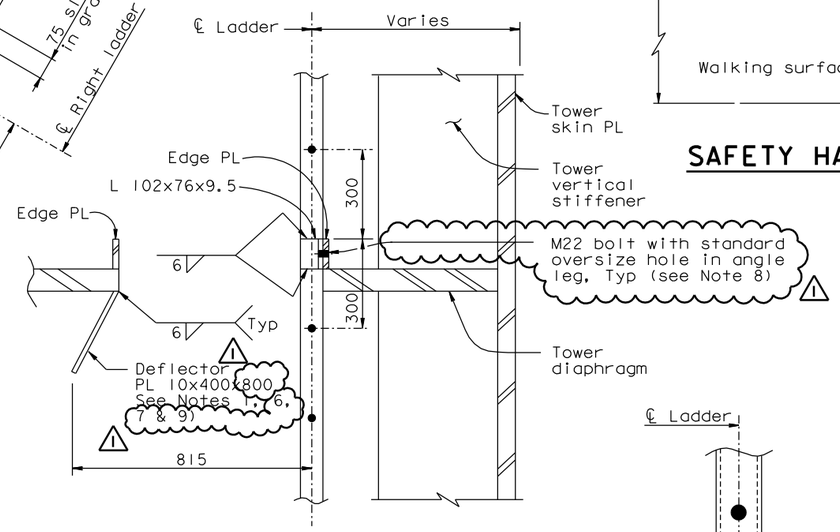

SECTION D-D
1:10

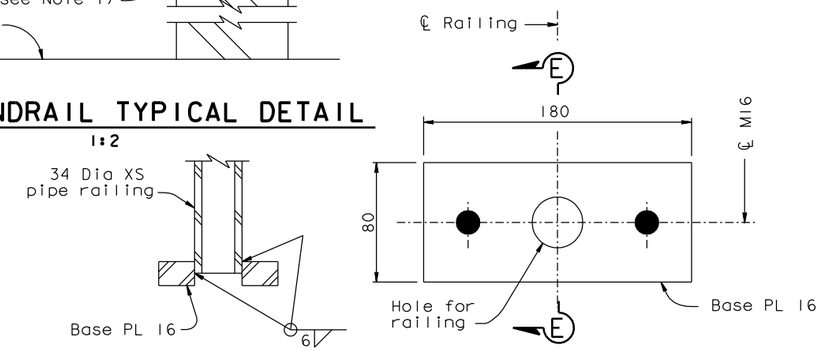

SECTION E-E

PLAN VIEW

RAILING BASE PLATE DETAILS
1:2

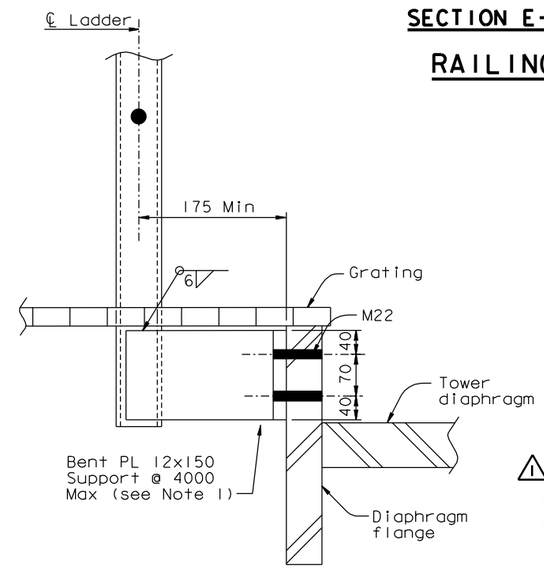

TYPICAL LADDER CONNECTION TO DIAPHRAGM FLANGE

SECTION B-B
1:5
(SECTION C-C similar)

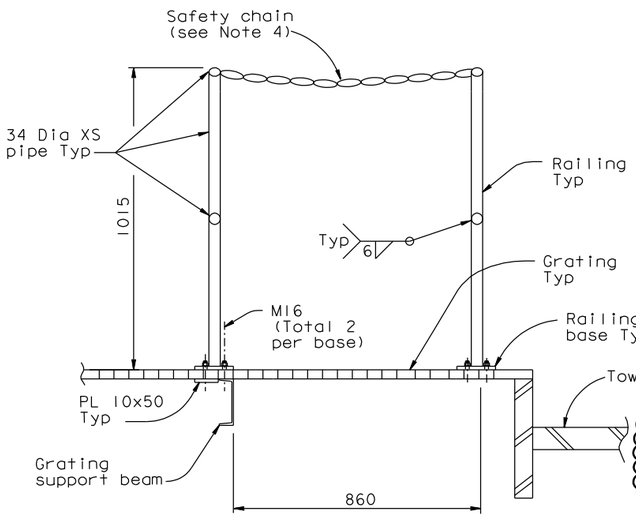

SECTION A-A
1:10

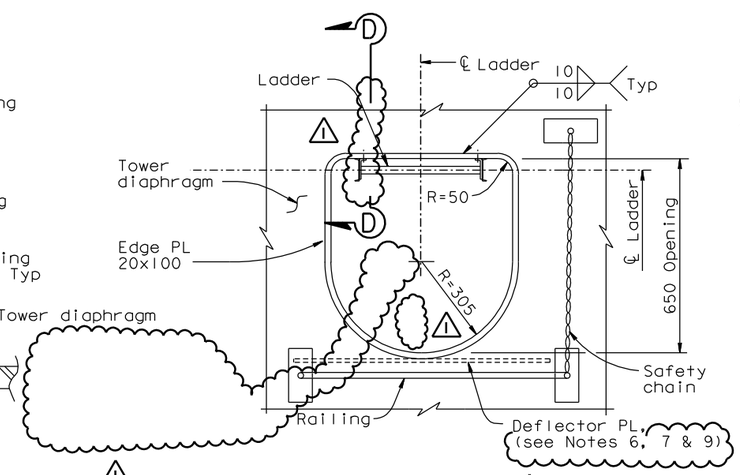

DETAIL E
1:10

NOTES:

1. The Contractor shall detail typical connections to fit the supporting structure, and may submit alternative designs for review and approval of the Engineer.
2. For tower diaphragm dimensions, see "Tower Diaphragm Details" sheets.
3. For ladder details not shown, see "Tower Access Details No. 7" sheet.
4. Safety chain shall be galvanized chain with spring clip end fasteners. Chain and fasteners to be rated at 5 kN (1000 lb) breaking load.
5. Opening in grating and direction of ladder shall alternate as shown on Section B-B on "Tower Access Details No.5" sheet. Railing and safety chain shall enclose opening in grating.
6. Deflector plate may be omitted at the two ladder openings at elevation 9.000 m.
7. Deflector plate may be coped or slotted to clear longitudinal stiffeners.
8. Bolt shall be installed snug-tight prior to load transfer and fully tensioned after load transfer.
9. Deflector plates interfering with diaphragm web access openings at elevation 109.000 m and above shall be omitted.

ALL DIMENSIONS ARE IN MILLIMETERS UNLESS OTHERWISE SHOWN

100% PS&E

DATE PLOTTED => 23 JUL 2008 TIME PLOTTED => 11:13:15

USERNAME => ptom

R. Valizadeh/V. Toan/Y.L./W.L./F.C.
DESIGN OVERSIGHT
Roya Valizadeh / Vong Toan / Y. Liu
SIGN OFF DATE 7/18/08

Rev. Date: 5-18-98

	BY	CHECKED	
DESIGN	M. Nader	M. Gulyas	
DETAILS	G. Baker	L. Rus	
QUANTITIES	D. Turner	J. Leventini	

PREPARED FOR THE STATE OF CALIFORNIA DEPARTMENT OF TRANSPORTATION

R. Manzanarez
PROJECT ENGINEER

BRIDGE NO. 34-0006L/R
KILOMETER POST 13.2/13.9

SAN FRANCISCO OAKLAND BAY BRIDGE
EAST SPAN SEISMIC SAFETY PROJECT
SELF-ANCHORED SUSPENSION BRIDGE (SUPERSTRUCTURE & TOWER)

TOWER ACCESS DETAILS NO. 8

ORIGINAL SCALE IN MILLIMETERS FOR REDUCED PLANS 0 10 20 30 40 50 60 70 80 90 100

CU 04
EA 0120F1

DISREGARD PRINTS BEARING EARLIER REVISION DATES

REVISION DATES (PRELIMINARY STAGE ONLY) 05/15/99 08/02/99 05/31/01 04/08/02 07/01/02 12/19/02

SHEET 507R1 OF

FILE => I:\bb\04-01201\sas\contract plans and cco\cco\in progress\cco#65\dgn\akacc08c.dgn

DIST.	COUNTY	ROUTE	KILOMETER POST TOTAL PROJECT	SHEET NO.	TOTAL SHEETS
04	SF	80	13.2/13.9	925R1	1204

Caltrans Metric

REGISTERED ENGINEER - CIVIL

12-6-04
PLANS APPROVAL DATE

REGISTERED PROFESSIONAL ENGINEER Marwan N. Nader No. C 054426 Exp. 12/31/09 CIVIL STATE OF CALIFORNIA

The State of California or its officers or agents shall not be responsible for the accuracy or completeness of electronic copies of this plan sheet.

T.Y. LIN / MOFFATT & NICHOL
825 BATTERY STREET
SAN FRANCISCO, CA 94111

Caltrans now has a web site! To get to the web site, go to: http://www.dot.ca.gov

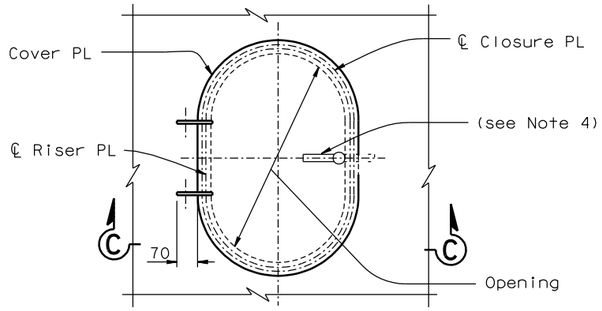

COVER DETAIL WITH RISER
1:10

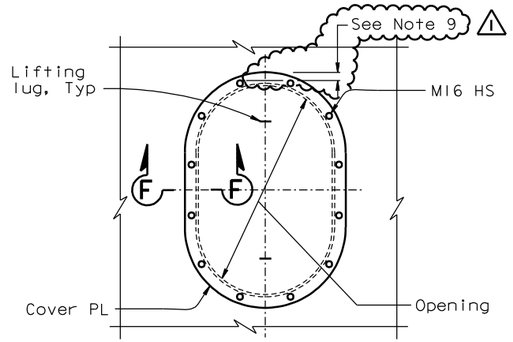

COVER DETAIL WITHOUT RISER
1:10
(See Note 1)

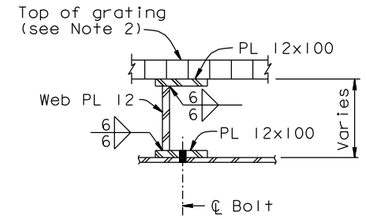

SECTION K-K
1:5

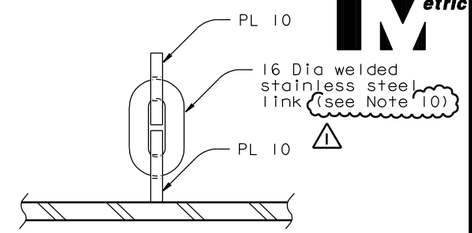

SECTION E-E
1:2.5

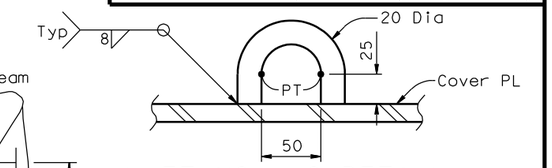

LIFTING LUG DETAIL
1:2.5

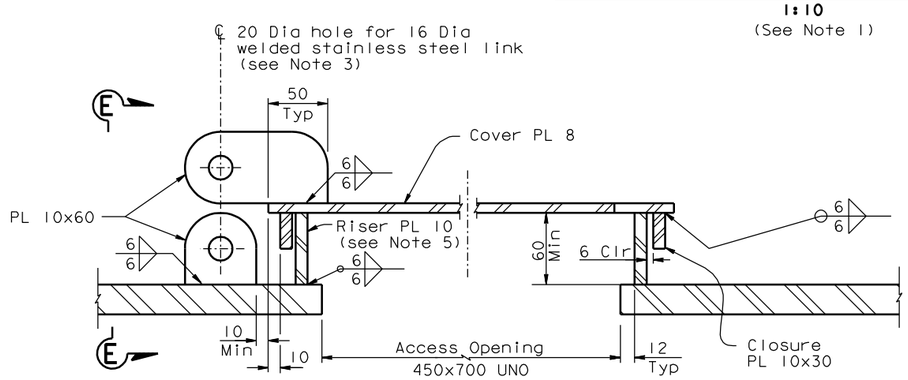

SECTION C-C
1:2.5

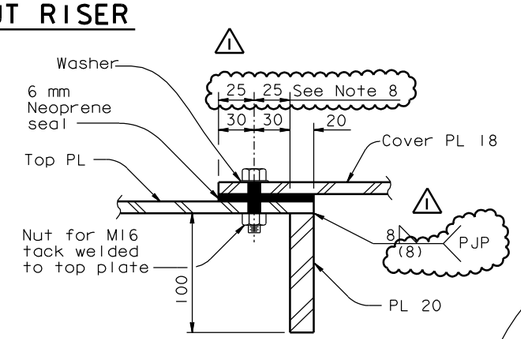

SECTION F-F
1:2.5

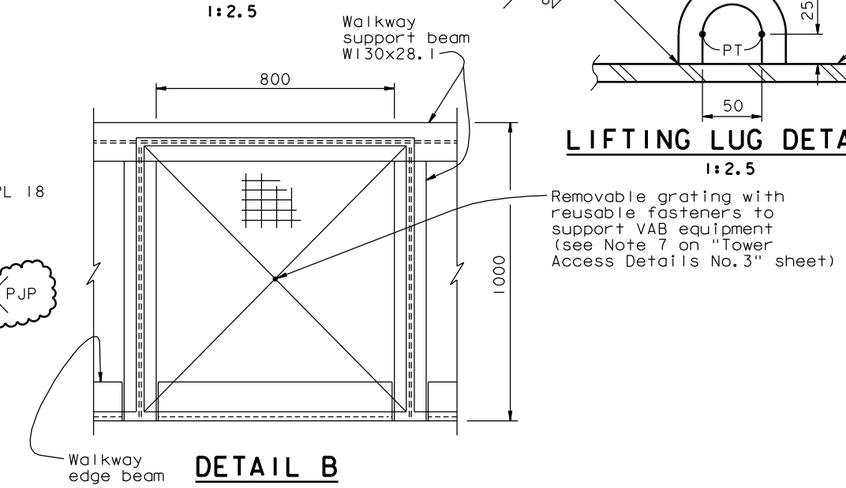

DETAIL B
1:10
(see Note 6)

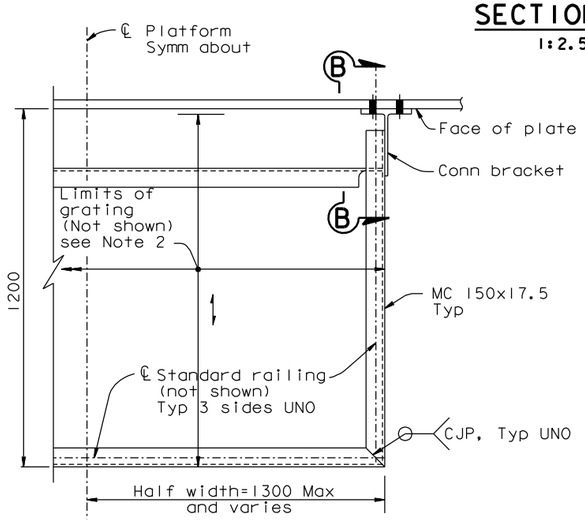

STANDARD PLATFORM DETAIL
1:10
(PLAN VIEW)

(See Note 5)
(See Note 11)

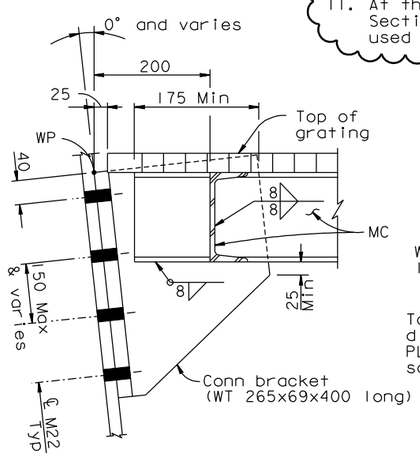

SECTION B-B
1:5

10. At the Contractor's option and subject to review and approval of the Engineer, a circular link may be used in lieu of the elliptical link.

11. At the Contractor's option, detail shown on "Alternative Section C-C" on sheet "Tower Access Details No.9A" may be used subject to review and approval of the Engineer.

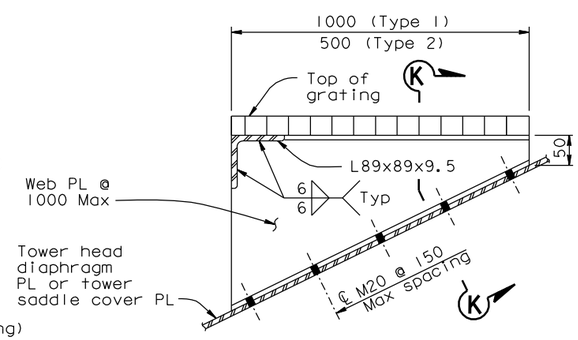

TOP PLATFORM DETAIL
(TYPE 2 SHOWN, TYPE 1 SIMILAR)
1:5
(ELEVATION)

LEGEND:

Direction of main reinforcement of grating

NOTES:

1. Cover detail without riser shall be used only for the top plates of strut facades adjacent to elevator at Elevations 53.850 m, 89.850 m, and 139.850 m.
2. Grating shall be galvanized steel grating with fasteners. Grating working load shall be 4.8 kN/m (100psf).
3. Welded link shall be installed so as to permit free rotation of access cover.
4. Access cover shall be secured by cam locks with locking L-handles and interior release.
5. Shape of cover to match access opening. Edge PL or riser shall be provided as noted.
6. For Detail B callout, see "Tower Access Details No.3" and Tower Access Details No.10" sheets.
7. Walkway support beam connection shall be as shown in Section G-G on "Tower Access Details No.3" sheet, and similar. Cope flange as necessary.
8. At the Contractor's option, size of cover plate may be reduced for openings at Elevations 89.850 m and 139.850 m.
9. At the Contractor's option, for openings at Elevations 89.950 m and 139.850 m, cover plate may be trimmed up to 20 mm for clearance with seal angle to accommodate design movement. M16 bolts shall be relocated to provide 20 mm edge distance, and a Max spacing of 200 mm.

ALL DIMENSIONS ARE IN MILLIMETERS UNLESS OTHERWISE SHOWN

REQUESTS FOR INFORMATION NOT ADDRESSED IN THIS CCO REMAIN IN FORCE

MARK	DATE	DESCRIPTIONS	BY	CH'D	CCO#
1	07/18/08	TOWER ACCESS	NV	MN	65

REVISIONS

CONTRACT CHANGE ORDER NO. ____
SHEET ___ OF ___

R. Valizadeh/V. Toan/Y.L./W.L./F.C.
DESIGN OVERSIGHT
SIGN OFF DATE 07/18/08

Rev. Date: 5-18-98

DESIGN	BY M. Nader	CHECKED M. Gulyas	
DETAILS	BY G. Baker	CHECKED L. Rus	
QUANTITIES	BY D. Turner	CHECKED J. Leventini	

PREPARED FOR THE STATE OF CALIFORNIA DEPARTMENT OF TRANSPORTATION

R. Manzanarez
PROJECT ENGINEER

BRIDGE NO. 34-0006L/R
KILOMETER POST 13.2/13.9

SAN FRANCISCO OAKLAND BAY BRIDGE
EAST SPAN SEISMIC SAFETY PROJECT
SELF-ANCHORED SUSPENSION BRIDGE
(SUPERSTRUCTURE & TOWER)

TOWER ACCESS DETAILS NO.9

ORIGINAL SCALE IN MILLIMETERS FOR REDUCED PLANS 0 10 20 30 40 50 60 70 80 90 100

CU 04
EA 0120F1

DISREGARD PRINTS BEARING EARLIER REVISION DATES

REVISION DATES (PRELIMINARY STAGE ONLY) 05/15/99 08/02/99 05/24/01 04/08/02 07/01/02 12/19/02

SHEET 508R1 OF

FILE => I:\bb\04-012001\sas\contract plans and cco\cco\in progress\cco#65\dgn\akacc07.dgn

USERNAME => ptom DATE PLOTTED => 23 JUL 2008 TIME PLOTTED => 11:14:04

100% PS&E

DIST.	COUNTY	ROUTE	KILOMETER POST TOTAL PROJECT	SHEET NO.	TOTAL SHEETS
04	SF	80	13.2/13.9	926R2	1204

Caltrans Metric

REGISTERED ENGINEER - CIVIL

12-6-04
PLANS APPROVAL DATE

REGISTERED PROFESSIONAL ENGINEER Marwan N. Nader No. C 054426 Exp. 12/31/09 CIVIL STATE OF CALIFORNIA

The State of California or its officers or agents shall not be responsible for the accuracy or completeness of electronic copies of this plan sheet.

T.Y. LIN / MOFFATT & NICHOL
825 BATTERY STREET
SAN FRANCISCO, CA 94111

Caltrans now has a web site! To get to the web site, go to: http://www.dot.ca.gov

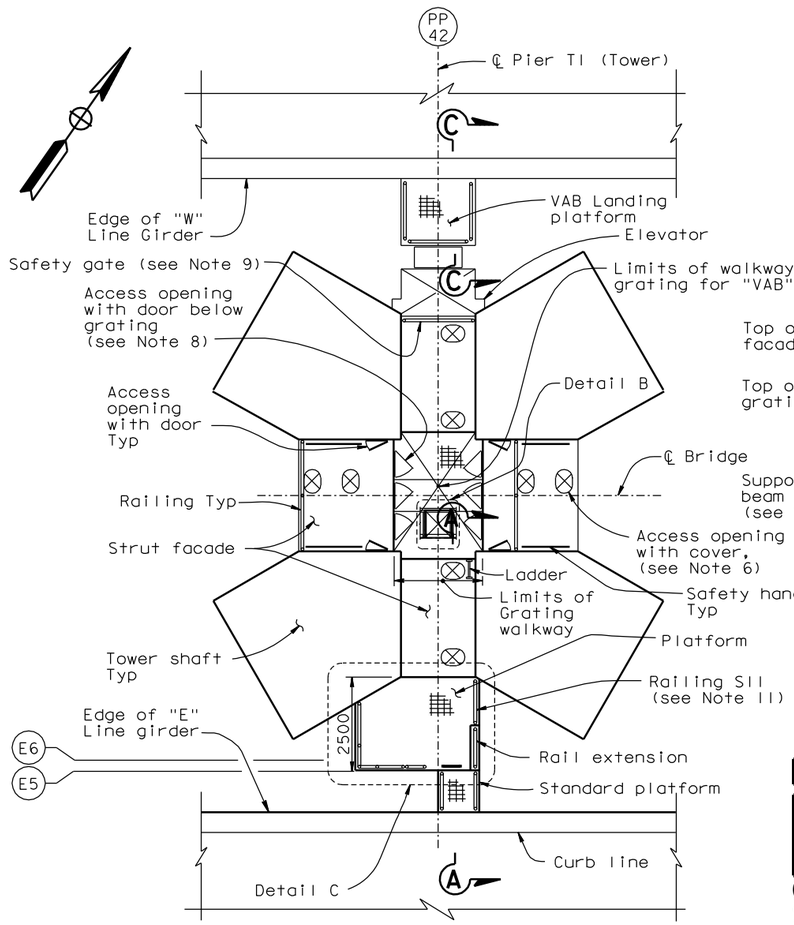

TOWER ACCESS PLATFORMS

SECTION F-F
NTS

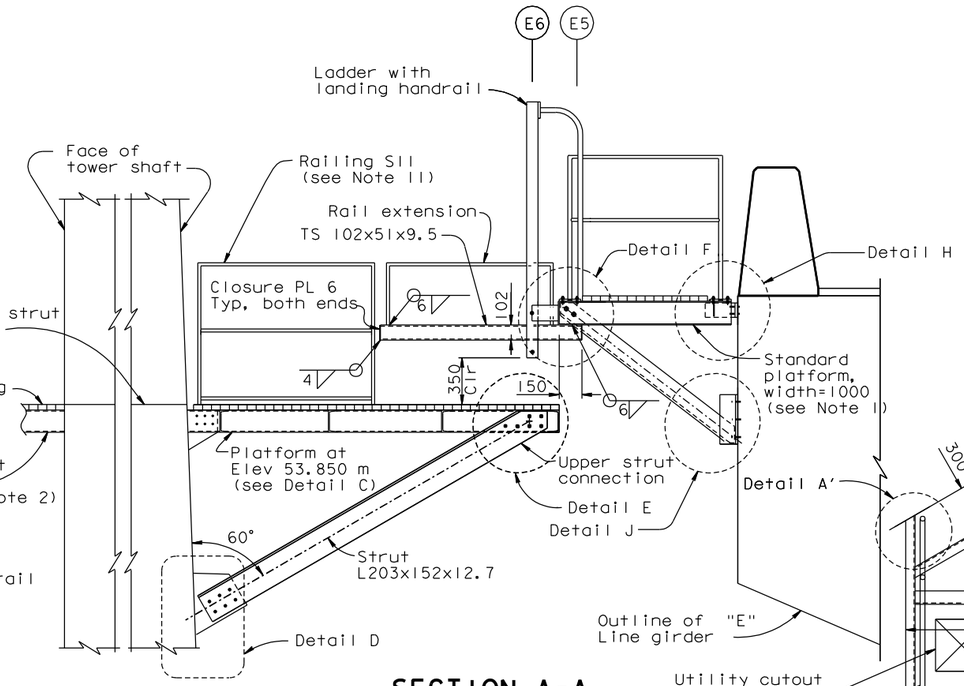

SECTION A-A
1:20

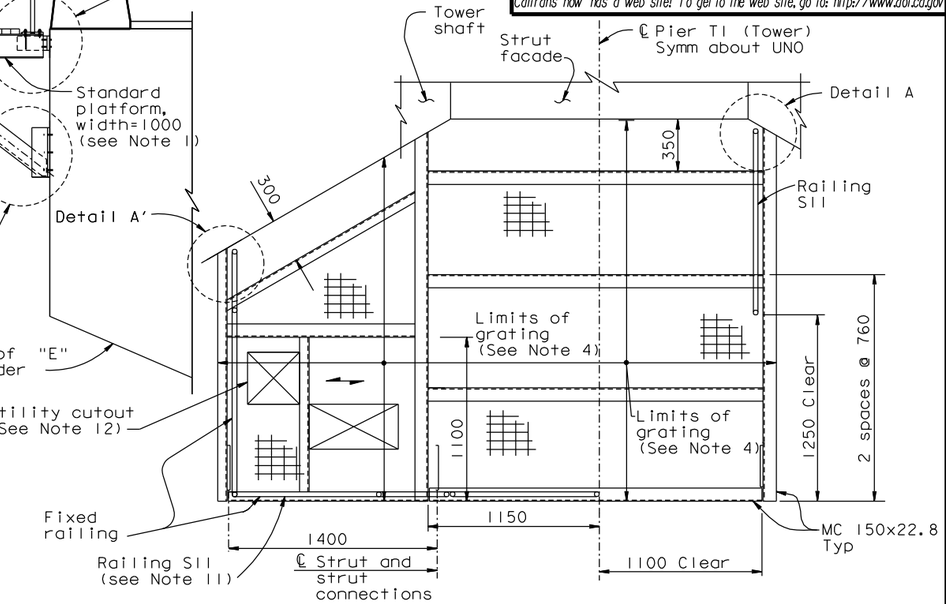

PLATFORM AT ELEV 53.850±
DETAIL C
1:20

MARK	DATE	DESCRIPTIONS	BY	CH'D	CCO#
2	08/15/08	TOWER ACCESS	JD	MN	65
1	09/07/07	MECHANICAL MODIFICATIONS	JD	MN	31

REQUESTS FOR INFORMATION NOT ADDRESSED IN THIS CCO REMAIN IN FORCE

REVISIONS

CONTRACT CHANGE ORDER NO. ____
SHEET ___ OF ___

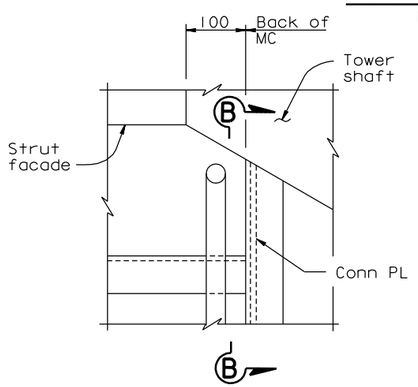

DETAIL A (Detail A shown, Detail A' similar)
1:5

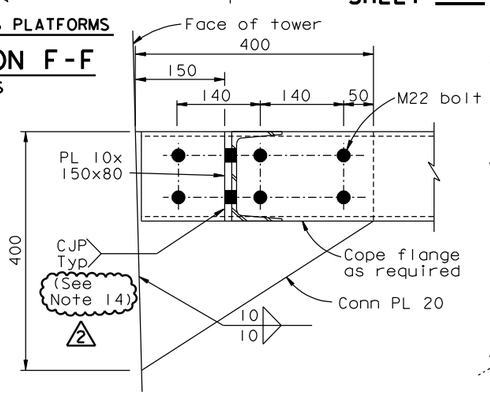

SECTION B-B
1:5

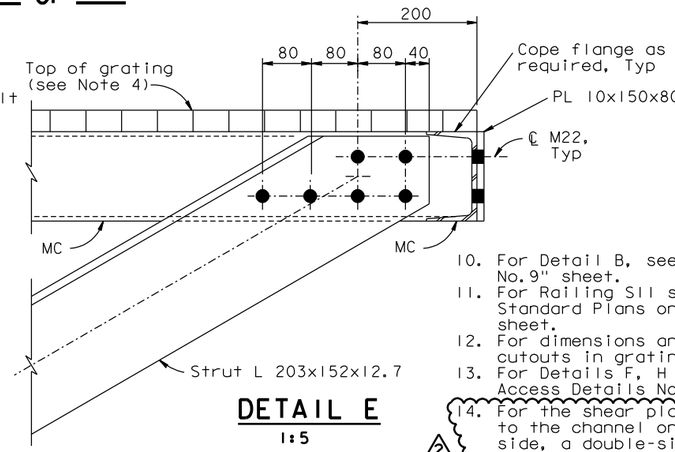

DETAIL E
1:5

LEGEND:

(E6) Girder Working Line 6 on "E" Line.

NOTES:

1. For standard platform details, see "Tower Access Details No.9" sheet.
2. For walkway support beam details, see "Tower Access Details No.3" sheet.
3. For railing details, see "Tower Access Details No.8" sheet.
4. Grating shall be galvanized steel grating with fasteners. Grating working load shall be 14.4 kN/m².
5. For Section C-C, Details D, see "Tower Access Details No. 11" sheet.
6. For access opening cover details, see "Tower Access Details No.9" sheet. All covers are with risers unless noted otherwise.
7. For location of Tower access opening in strut facade, see "Tower Strut Facade Details" sheets.
8. For access opening and door details, see "Tower Access Details No.4" sheet.
9. For safety gate details, see "Road Plans" sheets.
10. For Detail B, see "Tower Access Details No.9" sheet.
11. For Railing S11 see Index to Caltrans Standard Plans on "General Notes No.1" sheet.
12. For dimensions and locations of utility cutouts in grating, see "Road Plans".
13. For Details F, H and J, see "Tower Access Details No. 12" sheet.
14. For the shear plate that is connected to the channel on the front (open) side, a double-sided 6 mm fillet weld may be used. Shear plate shall be connected to channel flanges and web. (2)

ALL DIMENSIONS ARE IN MILLIMETERS UNLESS OTHERWISE SHOWN

R. Valizadeh/V. Toan/Y.L./W.L./F.C.
DESIGN OVERSIGHT
Y. Lui
SIGN OFF DATE 08/15/08

	BY	CHECKED
DESIGN	M. Nader	M. Gulyas
DETAILS	G. Baker	L. Rus
QUANTITIES	D. Turner	J. Leventini

PREPARED FOR THE STATE OF CALIFORNIA DEPARTMENT OF TRANSPORTATION

R. Manzanarez
PROJECT ENGINEER

BRIDGE NO. 34-0006L/R
KILOMETER POST 13.2/13.9

SAN FRANCISCO OAKLAND BAY BRIDGE
EAST SPAN SEISMIC SAFETY PROJECT
SELF-ANCHORED SUSPENSION BRIDGE (SUPERSTRUCTURE & TOWER)

TOWER ACCESS DETAILS NO. 10

Rev. Date: 5-18-98

ORIGINAL SCALE IN MILLIMETERS FOR REDUCED PLANS 0 10 20 30 40 50 60 70 80 90 100

CU 04
EA 0120F1

DISREGARD PRINTS BEARING EARLIER REVISION DATES

REVISION DATES (PRELIMINARY STAGE ONLY) 05/15/99 08/02/99 05/31/01 04/08/02 07/01/02 12/19/02

SHEET 509R2 OF

FILE => I:\bb\04-012001\sas\contract plans and cco\cco\in progress\cco#65\dgn\akacc09.dgn

100% PS&E

DATE PLOTTED => 13 AUG 2008 TIME PLOTTED => 16:51:09

USERNAME => dwinrow

DIST.	COUNTY	ROUTE	KILOMETER POST TOTAL PROJECT	SHEET NO.	TOTAL SHEETS
04	SF	80	13.2/13.9	929R2	1204

Caltrans Metric

REGISTERED ENGINEER - CIVIL

12-6-04
PLANS APPROVAL DATE

REGISTERED PROFESSIONAL ENGINEER Marwan N. Nader No. C 054426 Exp. 12/31/09 CIVIL STATE OF CALIFORNIA

The State of California or its officers or agents shall not be responsible for the accuracy or completeness of electronic copies of this plan sheet.

T.Y. LIN / MOFFATT & NICHOL
825 BATTERY STREET
SAN FRANCISCO, CA 94111

Caltrans now has a web site! To get to the web site, go to: http://www.dot.ca.gov

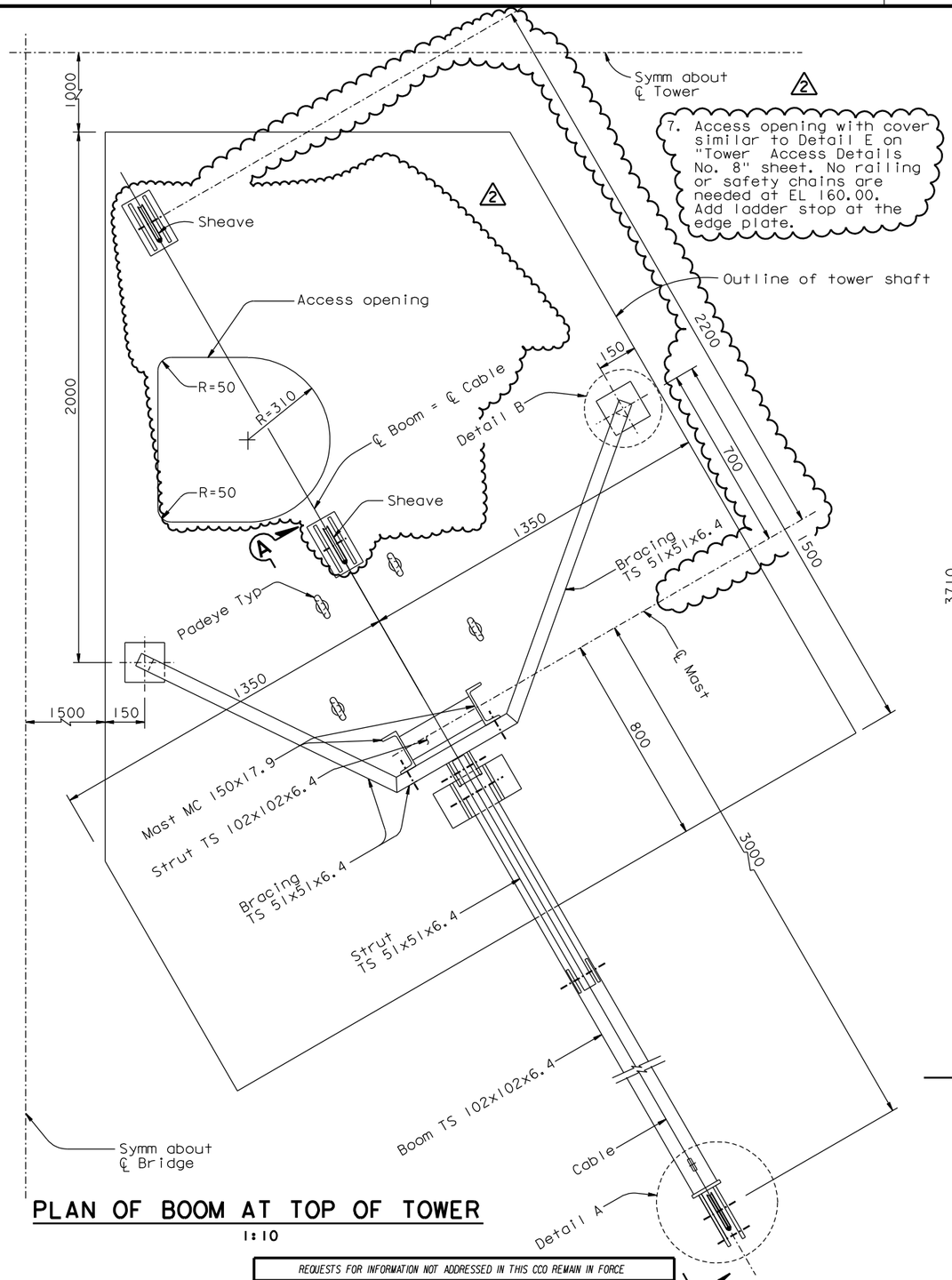

PLAN OF BOOM AT TOP OF TOWER

1:10

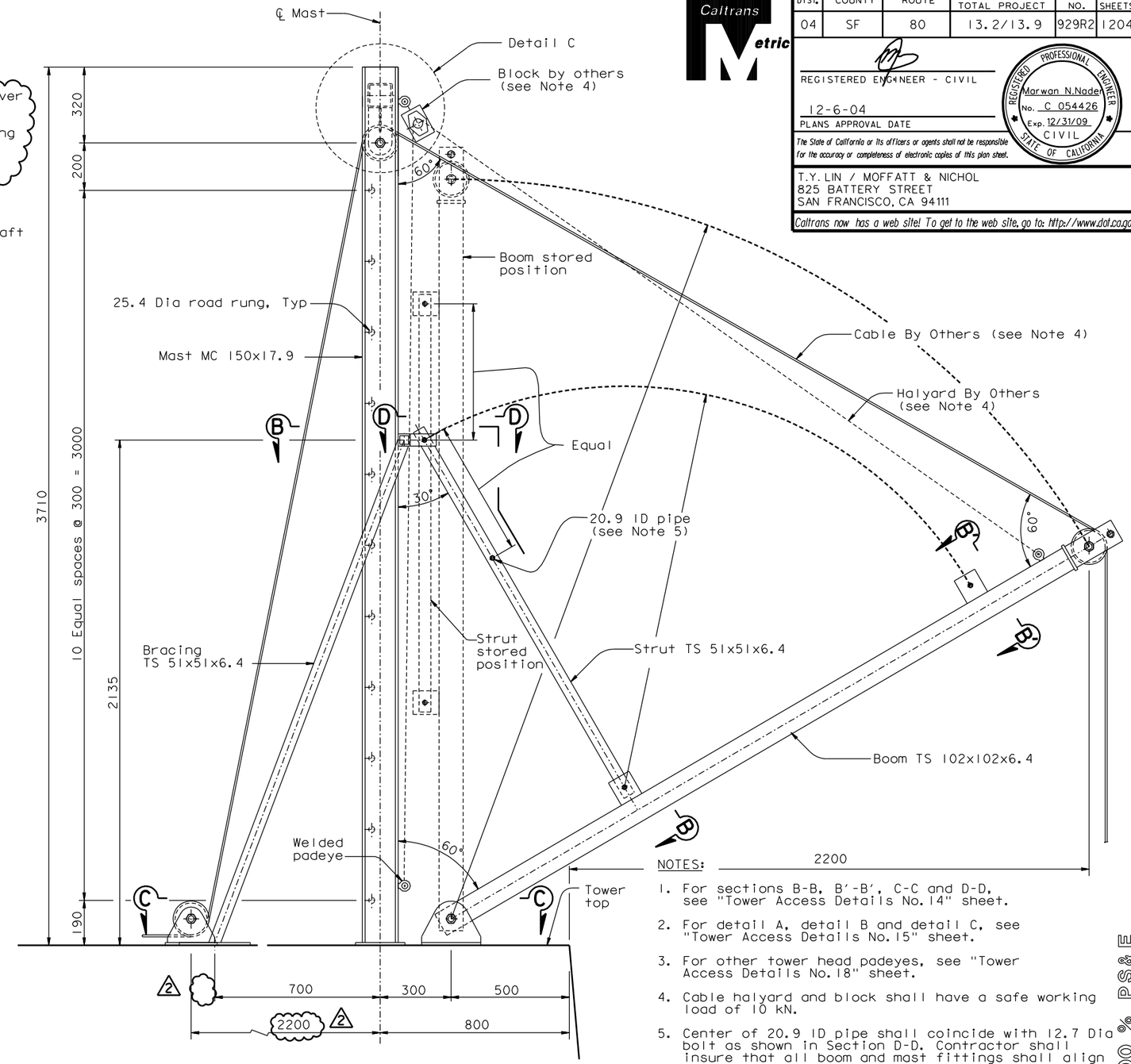

SECTION A-A

1:10

ALL DIMENSIONS ARE IN MILLIMETERS UNLESS OTHERWISE SHOWN

NOTES:

1. For sections B-B, B'-B', C-C and D-D, see "Tower Access Details No. 14" sheet.
2. For detail A, detail B and detail C, see "Tower Access Details No. 15" sheet.
3. For other tower head padeyes, see "Tower Access Details No. 18" sheet.
4. Cable halyard and block shall have a safe working load of 10 kN.
5. Center of 20.9 ID pipe shall coincide with 12.7 Dia bolt as shown in Section D-D. Contractor shall insure that all boom and mast fittings shall align in both stored and extended positions.
6. For Padeye typical detail and design force, see "Girder Access Details No. 10" sheet.

REQUESTS FOR INFORMATION NOT ADDRESSED IN THIS CCO REMAIN IN FORCE

MARK	DATE	DESCRIPTIONS	BY	CH'D	CCO#
2	07/18/08	TOWER ACCESS	NV	MN	65
1	06/22/07	WELDED PADEYES	NV	MN	41

REVISIONS

R. Valizadeh/V. Toan/Y.L./W.L./F.C.
DESIGN OVERSIGHT
SIGN OFF DATE 07/18/08

CONTRACT CHANGE ORDER NO. ____
SHEET ____ OF ____

Rev. Date: 5-18-98

DESIGN	BY M. Nader	CHECKED N. Vo	
DETAILS	BY G. Baker	CHECKED N. Vo	
QUANTITIES	BY G. Baker	CHECKED N. Vo	

PREPARED FOR THE STATE OF CALIFORNIA DEPARTMENT OF TRANSPORTATION

R. Manzanarez
PROJECT ENGINEER

BRIDGE NO. 34-0006L/R
KILOMETER POST 13.2/13.9

SAN FRANCISCO OAKLAND BAY BRIDGE
EAST SPAN SEISMIC SAFETY PROJECT
SELF-ANCHORED SUSPENSION BRIDGE
(SUPERSTRUCTURE & TOWER)

TOWER ACCESS DETAILS NO. 13

ORIGINAL SCALE IN MILLIMETERS FOR REDUCED PLANS 0 10 20 30 40 50 60 70 80 90 100

CU 04
EA 0120F1

DISREGARD PRINTS BEARING EARLIER REVISION DATES

REVISION DATES (PRELIMINARY STAGE ONLY) 04/08/02 07/01/02 12/19/02

SHEET 512R2 OF

FILE => I:\bb\04-0120F1\sas\contract plans and cco\cco\in progress\cco#65\dgn\akacc13b.dgn

100% PS&E

DATE PLOTTED => 23 JUL 2008 TIME PLOTTED => 11:14:42

USERNAME => ptom

DIST.	COUNTY	ROUTE	KILOMETER POST TOTAL PROJECT	SHEET NO.	TOTAL SHEETS
04	SF	80	13.2/13.9	932R2	1204

Caltrans Metric

REGISTERED ENGINEER - CIVIL

12-6-04
PLANS APPROVAL DATE

REGISTERED PROFESSIONAL ENGINEER Marwan N.Nader No. C 54426 Exp. 12/31/09 CIVIL STATE OF CALIFORNIA

The State of California or its officers or agents shall not be responsible for the accuracy or completeness of electronic copies of this plan sheet.

T.Y. LIN / MOFFATT & NICHOL
825 BATTERY STREET
SAN FRANCISCO, CA 94111

Caltrans now has a web site! To get to the web site, go to: http://www.dot.ca.gov

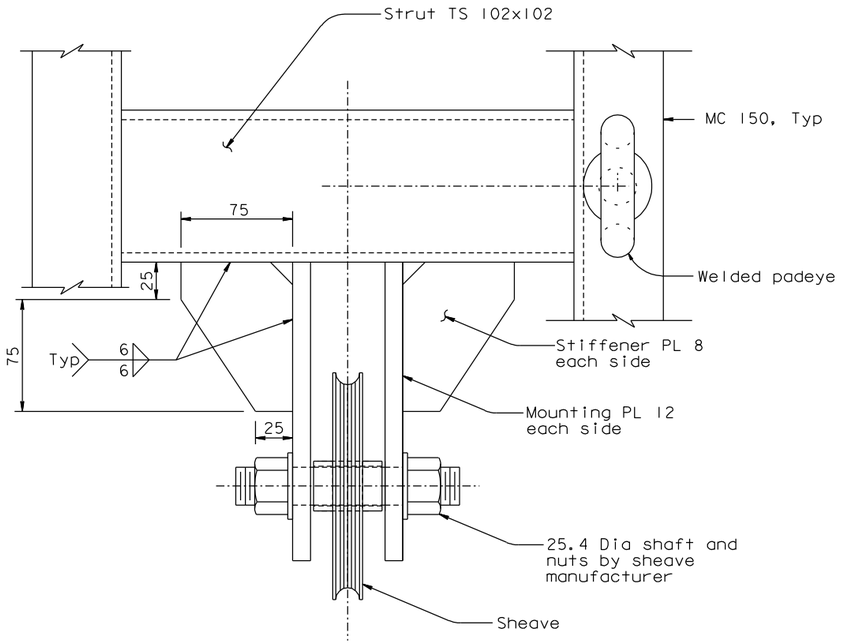

VIEW G-G
1:2

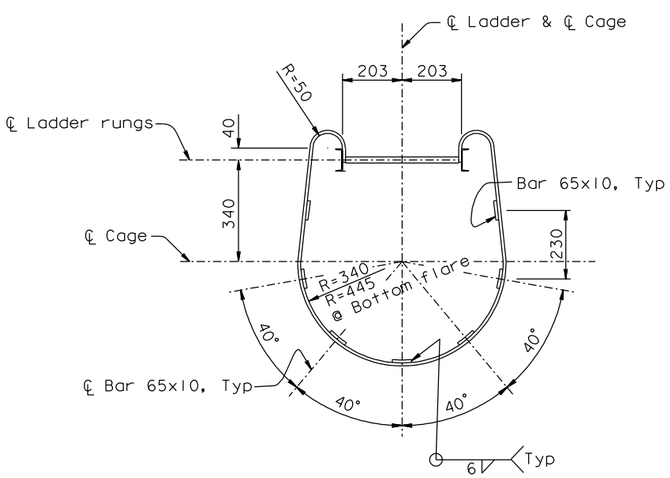

SECTION A-A (Rotated 90° clockwise)
1:10

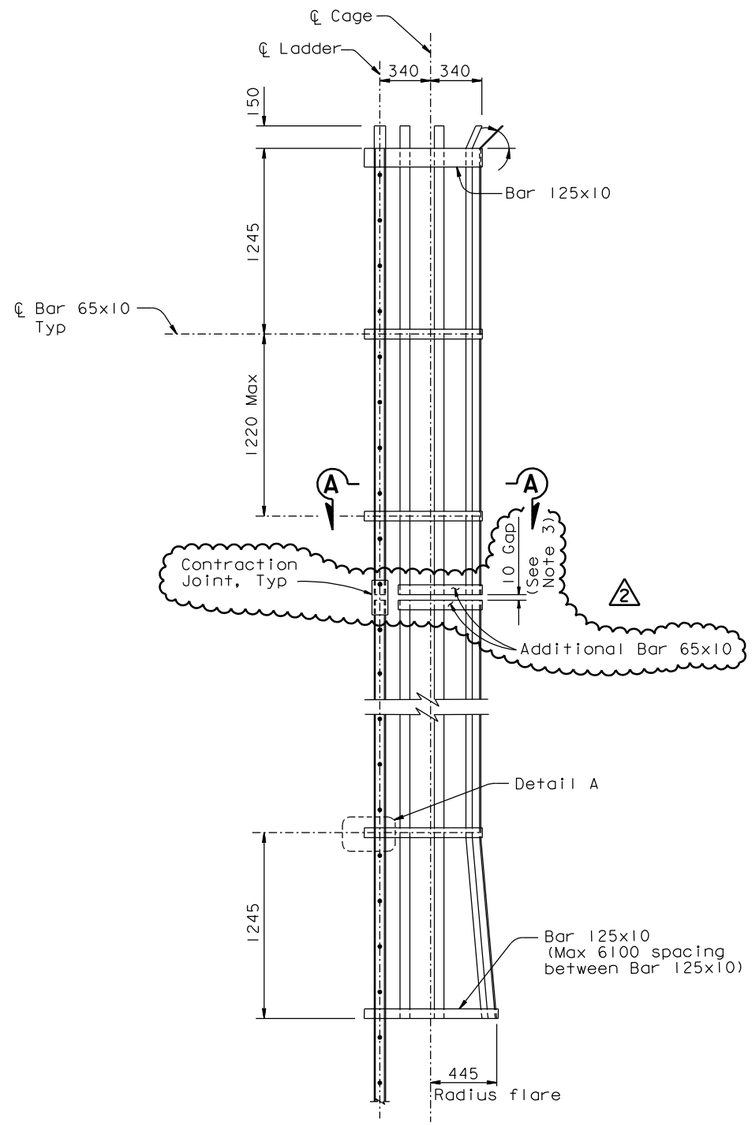

LADDER SAFETY CAGE ELEVATION
1:20

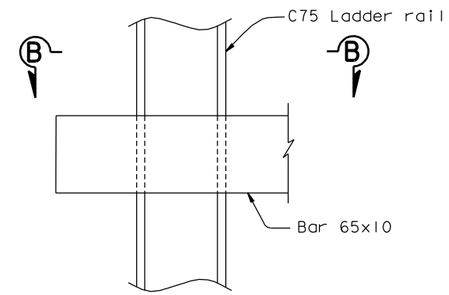

DETAIL A
1:2.5

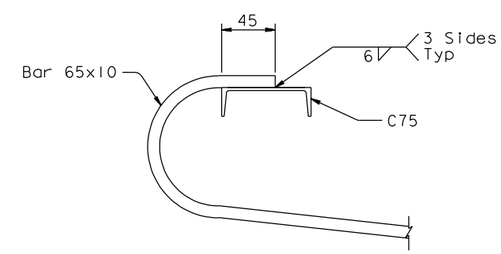

SECTION B-B
1:2.5

NOTES:

1. For ladder details, see "Tower Access Details No. 7" sheet.
2. For Padeye typical details and design force, see "Girder Access Details No. 10" sheet.
3. The 10 mm gap shall be centered between ladder rungs at contraction joint locations. For typical ladder contraction joint locations see "Tower Access Details No. 5" sheet.

100 % PS&E

DATE PLOTTED => 23 JUL 2008 TIME PLOTTED => 11:15:28

REQUESTS FOR INFORMATION NOT ADDRESSED IN THIS CCO REMAIN IN FORCE

MARK	DATE	DESCRIPTIONS	BY	CH'D	CCO#
2	07/18/08	TOWER ACCESS	NV	MN	65
1	06/22/07	WELDED PADEYES	NV	MN	41

REVISIONS

CONTRACT CHANGE ORDER NO. ____
SHEET ___ OF ___

R. Valizadeh/V. Toan/Y.L./W.L./F.C.
DESIGN OVERSIGHT
Roya Valizadeh / Vong Toan / Y. Liu
SIGN OFF DATE 07/18/08

Rev. Date: 5-18-98

DESIGN	BY M. Nader	CHECKED N. Vo	
DETAILS	BY G. Baker	CHECKED N. Vo	
QUANTITIES	BY G. Baker	CHECKED N. Vo	

PREPARED FOR THE STATE OF CALIFORNIA DEPARTMENT OF TRANSPORTATION

ORIGINAL SCALE IN MILLIMETERS FOR REDUCED PLANS 0 10 20 30 40 50 60 70 80 90 100

ALL DIMENSIONS ARE IN MILLIMETERS UNLESS OTHERWISE SHOWN

R. Manzanarez
PROJECT ENGINEER

CU 04
EA 0120F1

BRIDGE NO. 34-0006L/R
KILOMETER POST 13.2/13.9

DISREGARD PRINTS BEARING EARLIER REVISION DATES

REVISION DATES (PRELIMINARY STAGE ONLY) 04/08/02 07/01/02 12/19/02

SHEET 515R2 OF

SAN FRANCISCO OAKLAND BAY BRIDGE
EAST SPAN SEISMIC SAFETY PROJECT
SELF-ANCHORED SUSPENSION BRIDGE
(SUPERSTRUCTURE & TOWER)

TOWER ACCESS DETAILS NO. 16

USERNAME => ptom

FILE => I:\bb\04-012001\sas\contract plans and cco\cco\in progress\cco#65\dgn\akacc16b.dgn