DIST.	COUNTY	ROUTE	KILOMETER POST TOTAL PROJECT	SHEET NO.	TOTAL SHEETS
04	SF	80	13.2/13.9	546R2	1204

Caltrans Metric

REGISTERED ENGINEER - CIVIL

12-6-04
PLANS APPROVAL DATE

REGISTERED PROFESSIONAL ENGINEER Marwan N. Nader No. C 054426 Exp. 12/31/09 CIVIL STATE OF CALIFORNIA

The State of California or its officers or agents shall not be responsible for the accuracy or completeness of electronic copies of this plan sheet.

T.Y. LIN / MOFFATT & NICHOL
825 BATTERY STREET
SAN FRANCISCO, CA 94111

Caltrans now has a web site! To get to the web site, go to: http://www.dot.ca.gov

NOTES:

1. Weld of the longitudinal stiffener to the tower shaft skin plates beyond the length indicated shall be in accordance with Table I in "Tower Splice Details No.2" sheet.
2. Perimeter of exterior splice plates shall be caulked.
3. Longitudinal stiffener splice plates shall be A709M HPS 485W steel.
4. Dimension shall be increased by 25 mm for (E1), (E2), (E3) to account for shim plate between skin plate and interior splice plate. (2)
5. For elevation of end of stiffener PL see "Tower Shaft Details No.7" sheet.

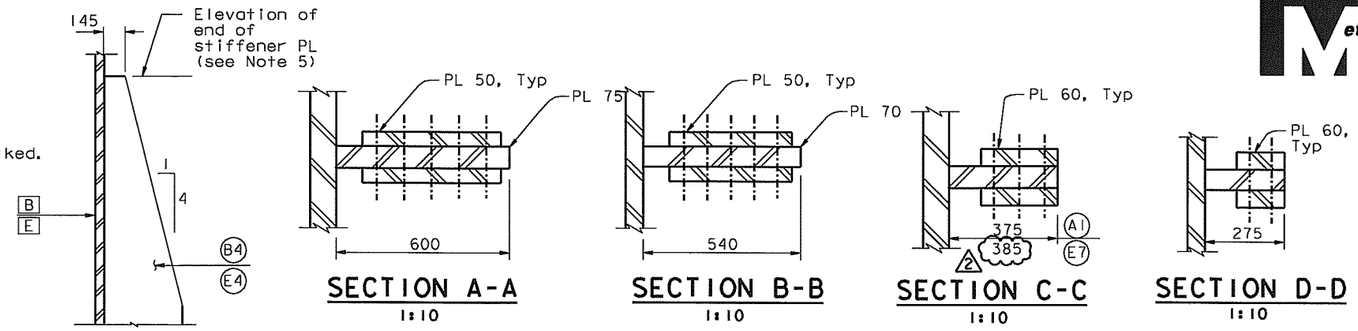

SECTION A-A 1:10

SECTION B-B 1:10

SECTION C-C 1:10

SECTION D-D 1:10

LONGITUDINAL STIFFENERS B4 AND E4

1:20

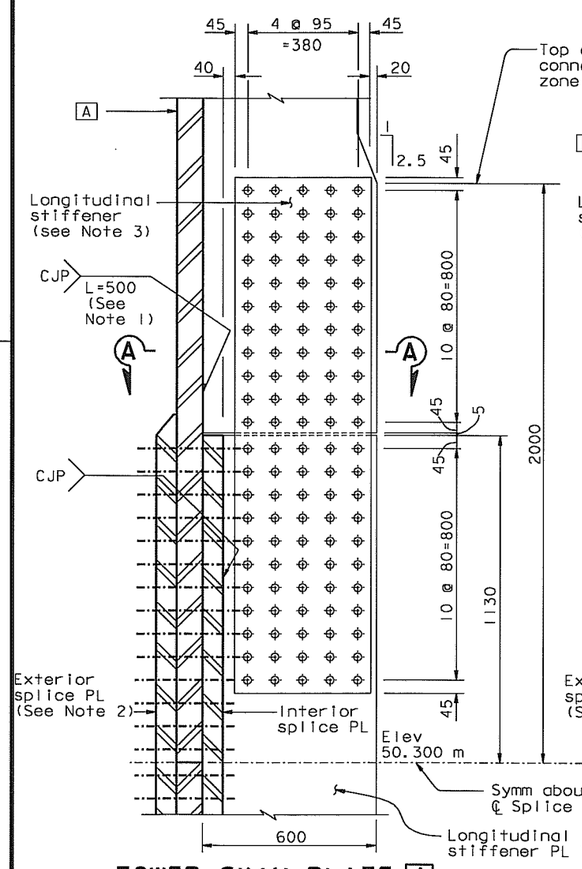

TOWER SKIN PLATE A (Except (A1))

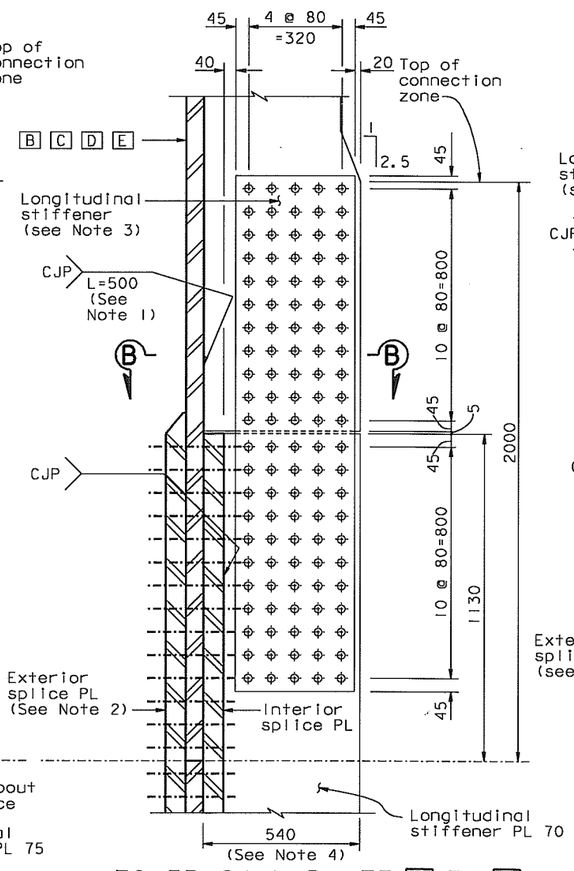

DETAIL F 1:10

TOWER SKIN PLATE B TO E (Except (B4), (D4), (E4), and (E7))

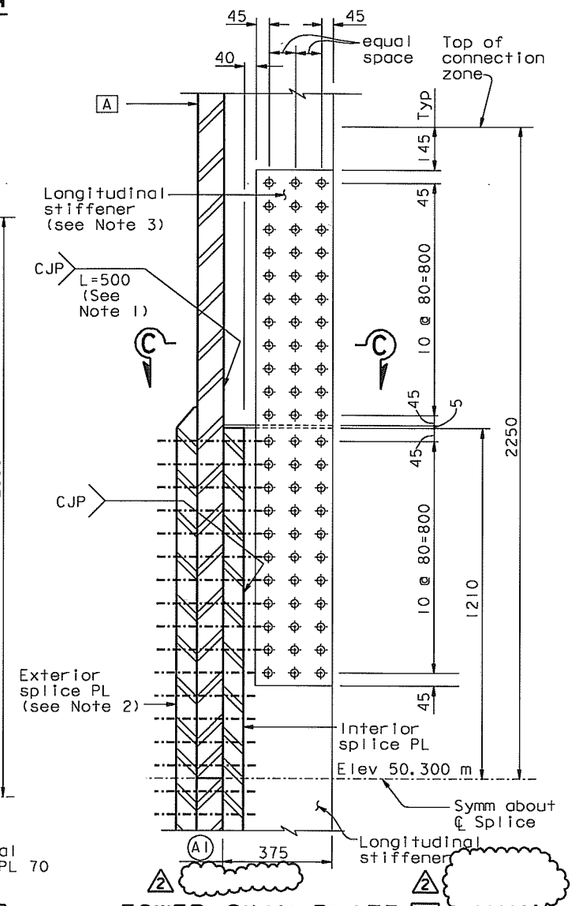

TOWER SKIN PLATE A (2)

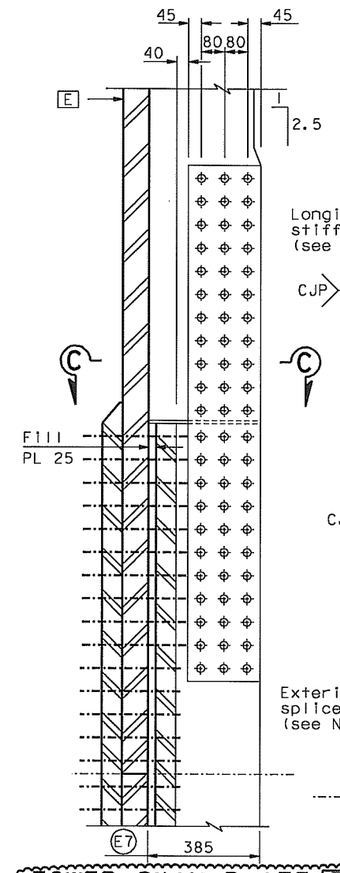

TOWER SKIN PLATE E (For details not shown, see stiffener (A1)) (2)

DETAIL F (For (A1) (E7) and (D4)) 1:10

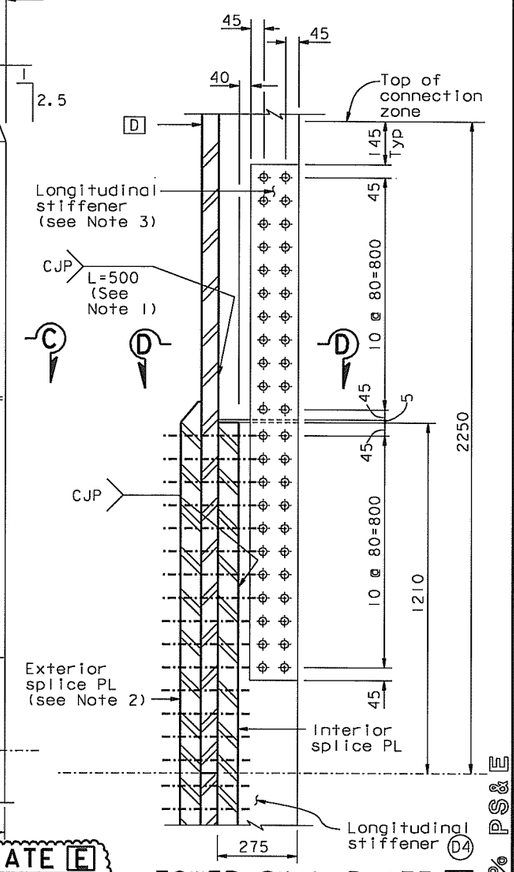

TOWER SKIN PLATE D

LEGEND:

M27 A490-X HS Bolt

ALL DIMENSIONS ARE IN MILLIMETERS UNLESS OTHERWISE SHOWN

REQUESTS FOR INFORMATION NOT ADDRESSED IN THIS CCO REMAIN IN FORCE

MARK	DATE	DESCRIPTIONS	BY	CH'D	CCO#
2	07/11/08	TOWER INTERNAL SHAFT	MN	NV	63
1	06/23/06	LONG STIFFENER GAP & MISC	MN	NV	21

REVISIONS

CONTRACT CHANGE ORDER NO. ____
SHEET ____ OF ____

R. Valizadeh/V. Toan/Y.L./W.L./F.C.
DESIGN OVERSIGHT
SIGN OFF DATE 07/11/08

Rev. Date: 5-18-98

DESIGN	BY M. Nader	CHECKED M. Gulyas	
DETAILS	BY L. Rus	CHECKED M. Gulyas	
QUANTITIES	BY L. Rus	CHECKED Y. Zhang	

PREPARED FOR THE STATE OF CALIFORNIA DEPARTMENT OF TRANSPORTATION

R. Manzanarez
PROJECT ENGINEER

BRIDGE NO. 34-0006L/R
KILOMETER POST 13.2/13.9

SAN FRANCISCO OAKLAND BAY BRIDGE
EAST SPAN SEISMIC SAFETY PROJECT
SELF-ANCHORED SUSPENSION BRIDGE
(SUPERSTRUCTURE & TOWER)

TOWER SPLICE DETAILS NO. 7

ORIGINAL SCALE IN MILLIMETERS FOR REDUCED PLANS 0 10 20 30 40 50 60 70 80 90 100

CU 04
EA 0120F1

DISREGARD PRINTS BEARING EARLIER REVISION DATES

REVISION DATES (PRELIMINARY STAGE ONLY) 05/31/01 01/08/02 07/09/02 12/18/02 06/06/03 11/13/05

SHEET 129R2 OF

FILE => I:\bb\04-012001\sas\contract plans and cco\cco\In progress\cco#63\dgn\aetsp07.dgn

100 % PS&E

DATE PLOTTED => 23 JUL 2008 TIME PLOTTED => 16:07:18

USERNAME => ptrom

DIST.	COUNTY	ROUTE	KILOMETER POST TOTAL PROJECT	SHEET NO.	TOTAL SHEETS
04	SF	80	13.2/13.9	556R2	1204

REGISTERED ENGINEER - CIVIL

12-6-04

PLANS APPROVAL DATE

REGISTERED PROFESSIONAL ENGINEER Marwan N. Nader No. C 054426 Exp. 12/31/09 CIVIL STATE OF CALIFORNIA

The State of California or its officers or agents shall not be responsible for the accuracy or completeness of electronic copies of this plan sheet.

T.Y. LIN / MOFFATT & NICHOL
825 BATTERY STREET
SAN FRANCISCO, CA 94111

To get to the web site, go to: http://www.dot.ca.gov

Caltrans Metric

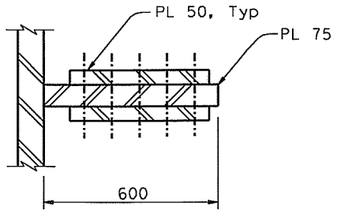

SECTION A-A
1:10

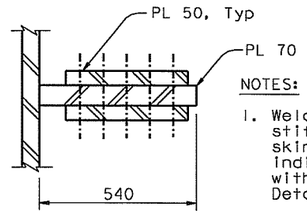

SECTION B-B
1:10

LEGEND:

⌖ M27 A490-X HS Bolt

NOTES:

1. Weld of the longitudinal stiffener to the tower shaft skin plates beyond the length indicated shall be in accordance with Table I in "Tower Splice Details No.2" sheet.
2. Dimension shall be increased by 25 mm for (E1) and 30 mm for (B1), (B2), (C1), (C2), and (C3) to account for shim plate between skin plate and interior splice plate.
3. Longitudinal stiffener splice plates shall be A709M HPS 485W steel.

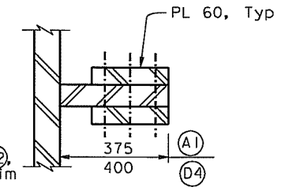

SECTION C-C
1:10

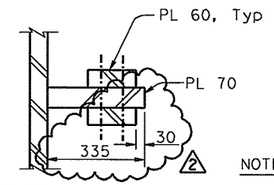

SECTION D-D
1:10

NOTES:

4. Perimeter of exterior splice plates shall be caulked.

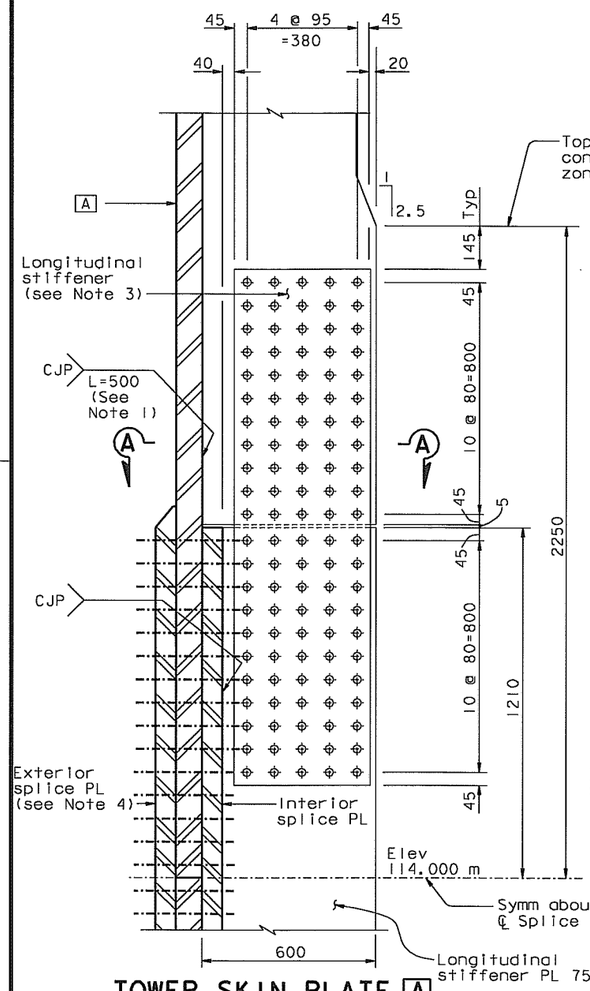

TOWER SKIN PLATE A
(Except A1)

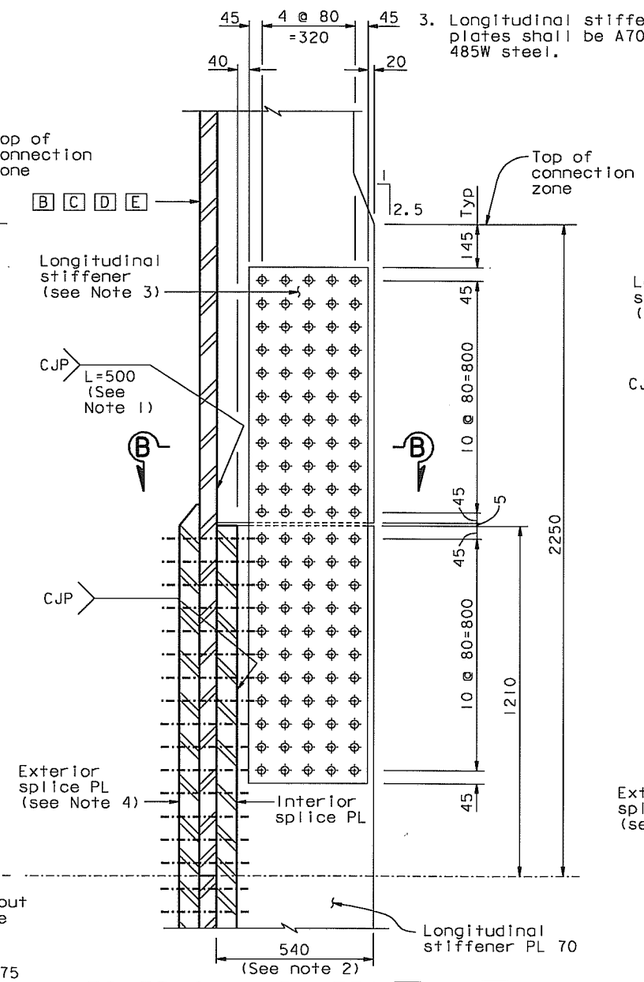

TOWER SKIN PLATES B TO E
(Except D4 and E7)

DETAIL F
1:10

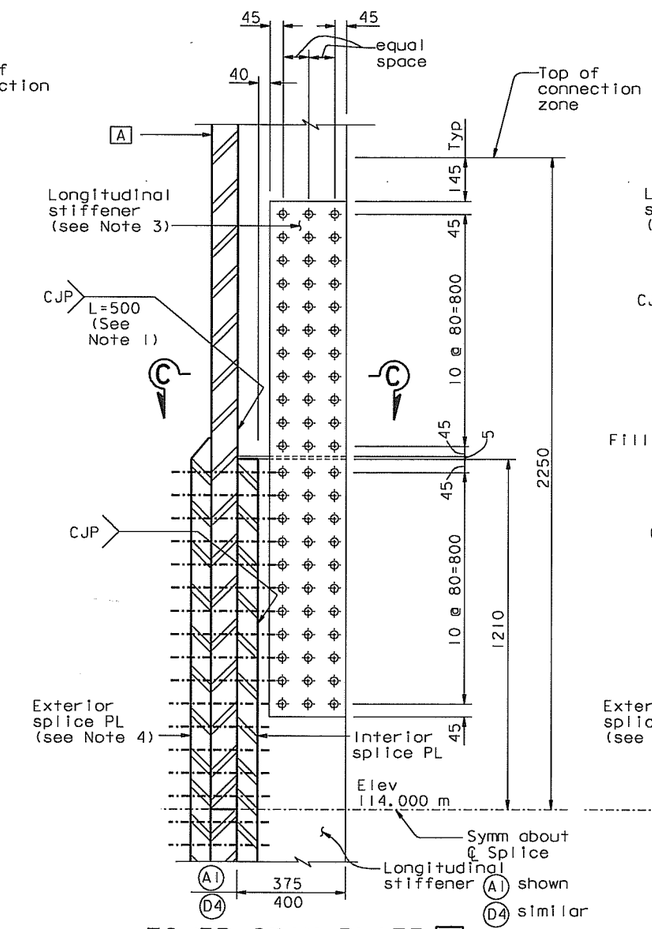

TOWER SKIN PLATE A

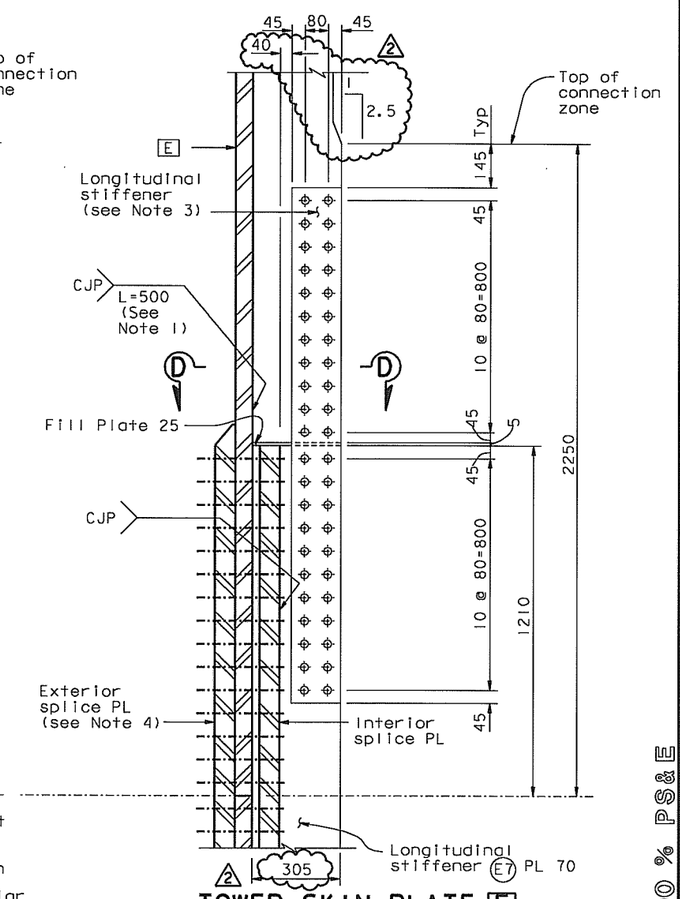

TOWER SKIN PLATE E

DETAIL F (For A1 D4 and E7)
1:10

ALL DIMENSIONS ARE IN MILLIMETERS UNLESS OTHERWISE SHOWN

REQUESTS FOR INFORMATION NOT ADDRESSED IN THIS CCO REMAIN IN FORCE

MARK	DATE	DESCRIPTIONS	BY	CH'D	CCO#
2	07/11/08	TOWER INTERNAL SHAFT	MN	NV	63
1	06/23/06	LONG. STIFFENER GAP & MISC.	MN	NV	21

REVISIONS

CONTRACT CHANGE ORDER NO. ____
SHEET ____ OF ____

R. Valizadeh/V. Toan/Y.L./W.L./F.C.
DESIGN OVERSIGHT
Roya Valizadeh / Vong Toan / Y. Liu
SIGN OFF DATE 07/11/08

Rev. Date: 5-18-98

	BY	CHECKED
DESIGN	M. Nader	N. Vo
DETAILS	J. Lopez	N. Vo
QUANTITIES	J. Lopez	N. Vo

PREPARED FOR THE STATE OF CALIFORNIA DEPARTMENT OF TRANSPORTATION

R. Manzanarez
PROJECT ENGINEER

BRIDGE NO. 34-0006L/R
KILOMETER POST 13.2/13.9

SAN FRANCISCO OAKLAND BAY BRIDGE
EAST SPAN SEISMIC SAFETY PROJECT
SELF-ANCHORED SUSPENSION BRIDGE
(SUPERSTRUCTURE & TOWER)

TOWER SPLICE DETAILS NO. 17

ORIGINAL SCALE IN MILLIMETERS FOR REDUCED PLANS 0 10 20 30 40 50 60 70 80 90 100

CU 04
EA 0120F1

DISREGARD PRINTS BEARING EARLIER REVISION DATES

REVISION DATES (PRELIMINARY STAGE ONLY) 05/31/01 04/08/02 07/01/02 12/18/02 11/13/05

SHEET 139R2 OF

FILE => I:\bb\04-012001\sas\contract plans and cco\cco\in progress\cco#63\dgn\aetspl7.dgn

100 % PS&E

USERNAME => vignatovsk DATE PLOTTED => 11 JUL 2008 TIME PLOTTED => 13:18:12

DIST.	COUNTY	ROUTE	KILOMETER POST TOTAL PROJECT	SHEET NO.	TOTAL SHEETS
04	SF	80	13.2/13.9	583R2	1204

REGISTERED ENGINEER - CIVIL

12-6-04

PLANS APPROVAL DATE

REGISTERED PROFESSIONAL ENGINEER Marwan N. Nader No. C 054426 Exp. 12/31/09 CIVIL STATE OF CALIFORNIA

The State of California or its officers or agents shall not be responsible for the accuracy or completeness of electronic copies of this plan sheet.

T.Y. LIN / MOFFATT & NICHOL
825 BATTERY STREET
SAN FRANCISCO, CA 94111

To get to the web site, go to: http://www.dot.ca.gov

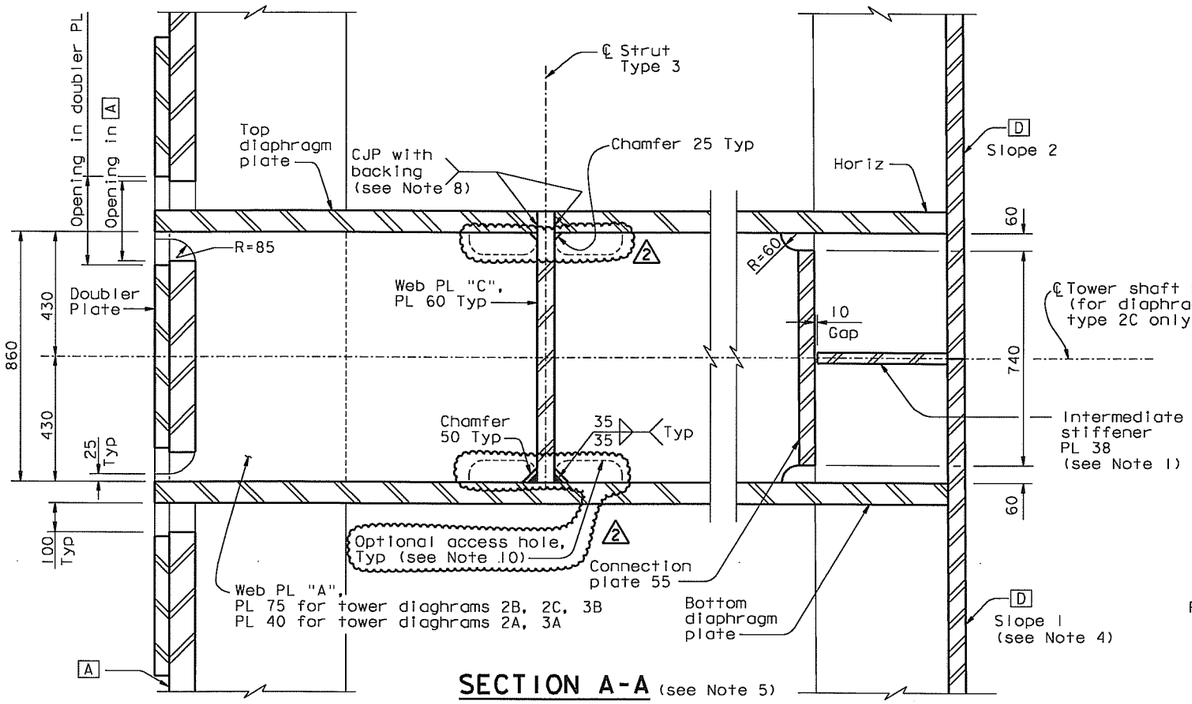

SECTION A-A (see Note 5)

1:10

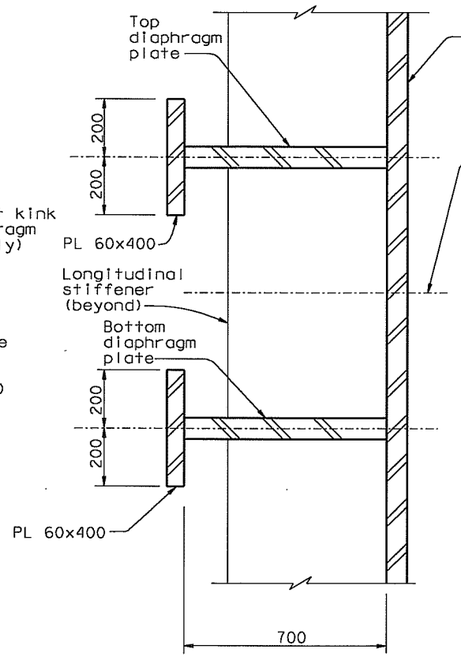

TYPE 3A AND 3B

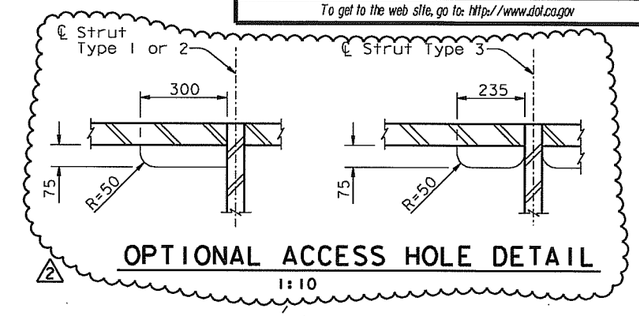

OPTIONAL ACCESS HOLE DETAIL

1:10

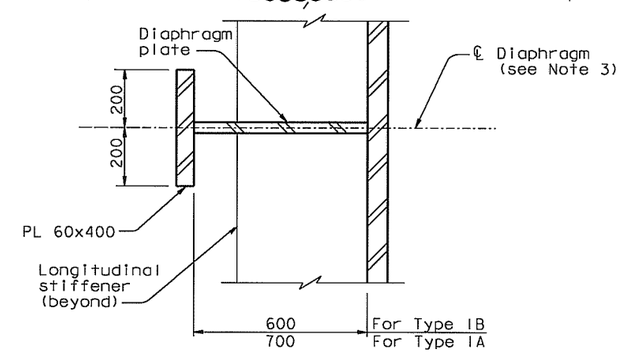

TYPE 1A AND 1B

SECTION C-C (Note: Fit lug plate not shown for clarity)

1:10

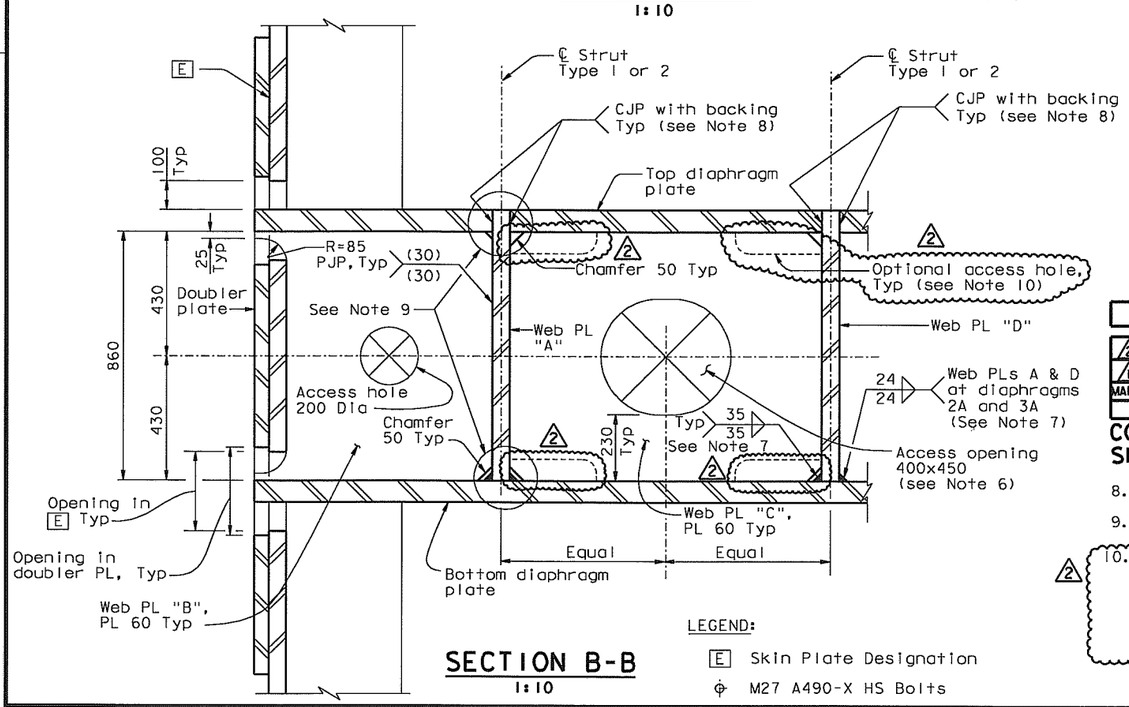

SECTION B-B

1:10

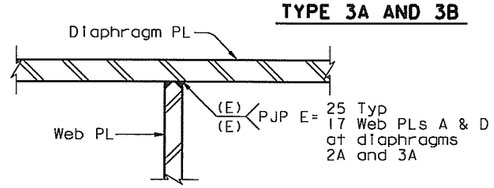

DETAIL A

1:10

MARK	DATE	DESCRIPTIONS	BY	CH'D	CCO#
2	07/11/08	TOWER INTERNAL SHAFT	MN	NV	63
1	06/23/06	WEB PL TO DIAPHRAGM PL WELD	MN	NV	21

REQUESTS FOR INFORMATION NOT ADDRESSED IN THIS CCO REMAIN IN FORCE

REVISIONS

CONTRACT CHANGE ORDER NO. ____
SHEET ___ OF ___

8. For alternate web plate to diaphragm plate weld, see Detail A.
9. Weld joint details shown at top and at bottom of web plate are interchangeable for all web plates.
10. At the Contractor's option, access holes may be provided to facilitate strut erection. Access holes for strut Type 3 apply at all tower strut elevations. Access holes for strut Type 1 apply at elevation 119 m. Access holes for strut Type 2 apply at elevation 143 m. See "Optional Access Hole Detail".

LEGEND:

E Skin Plate Designation

⊕ M27 A490-X HS Bolts

ALL DIMENSIONS ARE IN MILLIMETERS UNLESS OTHERWISE SHOWN

NOTES:

1. Intermediate stiffener plate only for diaphragm type 2C. For stiffener plate layout and details, see "Tower Diaphragm Details No.12" sheet.
2. Tower strut flange splice is not shown for clarity.
3. For diaphragm locations, see "Tower Diaphragm Details No.1" sheet.
4. For tower skin plate slope, see "Tower Shaft Details No.5" and "Tower Shaft Details No.6" sheets.
5. For inspection and access openings in web plate "A", see "Tower Diaphragm Details No.9" sheet.
6. For access opening, see Detail B on "Tower Diaphragm Details No.10" sheet.
7. An equivalent PJP weld is an acceptable alternative.

SAN FRANCISCO OAKLAND BAY BRIDGE
EAST SPAN SEISMIC SAFETY PROJECT
SELF-ANCHORED SUSPENSION BRIDGE
(SUPERSTRUCTURE & TOWER)

TOWER DIAPHRAGM DETAILS NO. 8

R. Valizadeh/V. Toan/Y.L./W.L./F.C.
DESIGN OVERSIGHT
SIGN OFF DATE 07/11/08

	BY	CHECKED
DESIGN	M. Nader	M. Gulyas
DETAILS	L. Rus	M. Gulyas
QUANTITIES	L. Rus	Y. Zhang

PREPARED FOR THE STATE OF CALIFORNIA DEPARTMENT OF TRANSPORTATION

R. Manzanarez
PROJECT ENGINEER

BRIDGE NO. 34-0006L/R
KILOMETER POST 13.2/13.9

Rev. Date: 5-18-98

ORIGINAL SCALE IN MILLIMETERS FOR REDUCED PLANS 0 10 20 30 40 50 60 70 80 90 100

CU 04
EA 0120F1

DISREGARD PRINTS BEARING EARLIER REVISION DATES

REVISION DATES (PRELIMINARY STAGE ONLY) 05/31/01 04/08/02 07/30/02 12/13/02 10/13/05 11/13/05

SHEET 166R2 OF

FILE => I:\bb\04-012001\sos\contract plans and cco\cco\in progress\cco#63\dgn\aetdh08.dgn

100 % PS&E

USERNAME => vignatovs DATE PLOTTED => 11 JUL 2008 TIME PLOTTED => 13:19:20

DIST.	COUNTY	ROUTE	KILOMETER POST TOTAL PROJECT	SHEET NO.	TOTAL SHEETS
04	SF	80	13.2/13.9	590R1	1204

REGISTERED ENGINEER - CIVIL

12-6-04
PLANS APPROVAL DATE

REGISTERED PROFESSIONAL ENGINEER Marwan N. Nader No. C 054426 Exp. 12/31/09 CIVIL STATE OF CALIFORNIA

The State of California or its officers or agents shall not be responsible for the accuracy or completeness of electronic copies of this plan sheet.

T.Y. LIN / MOFFATT & NICHOL
825 BATTERY STREET
SAN FRANCISCO, CA 94111

Caltrans now has a web site! To get to the web site, go to: http://www.dot.ca.gov

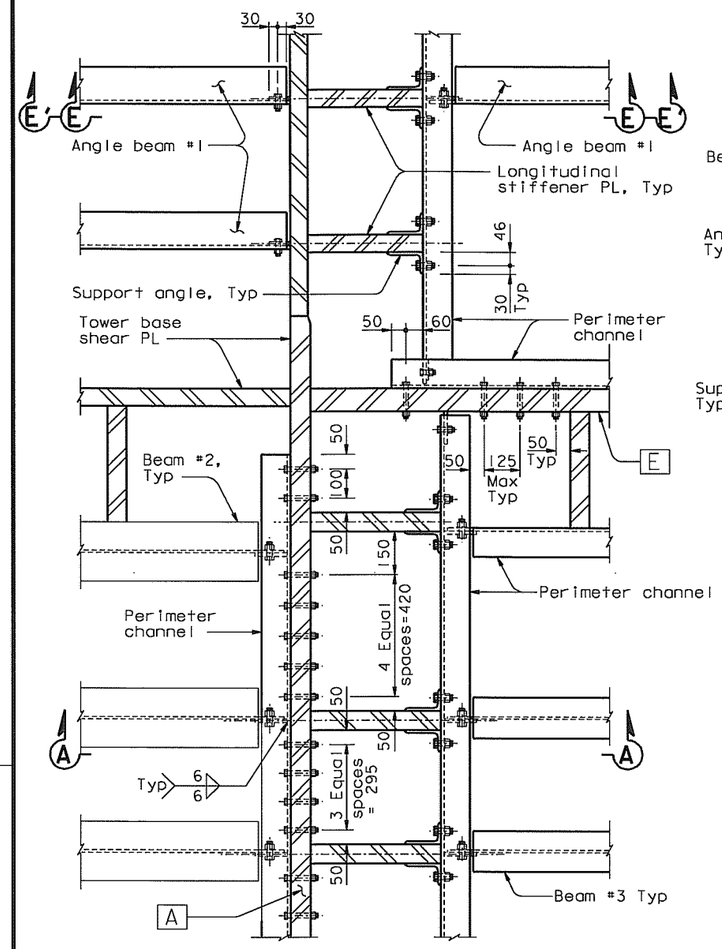

DETAIL A (Diaphragm plate not shown for clarity)
1:10

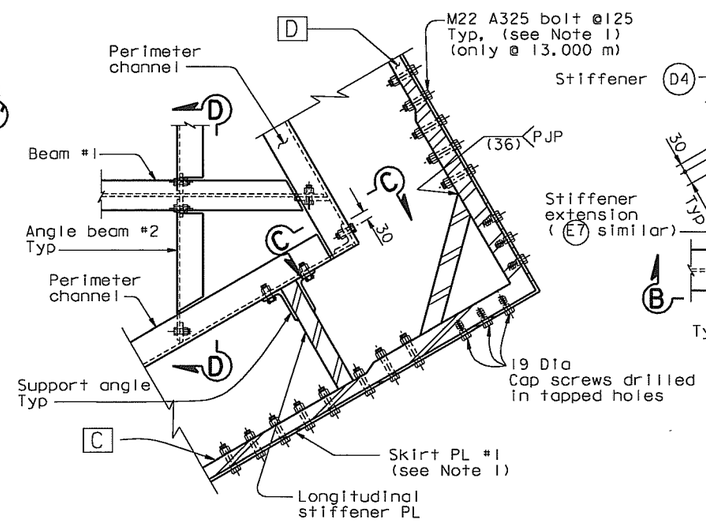

DETAIL B (Diaphragm plate not shown for clarity)
1:10

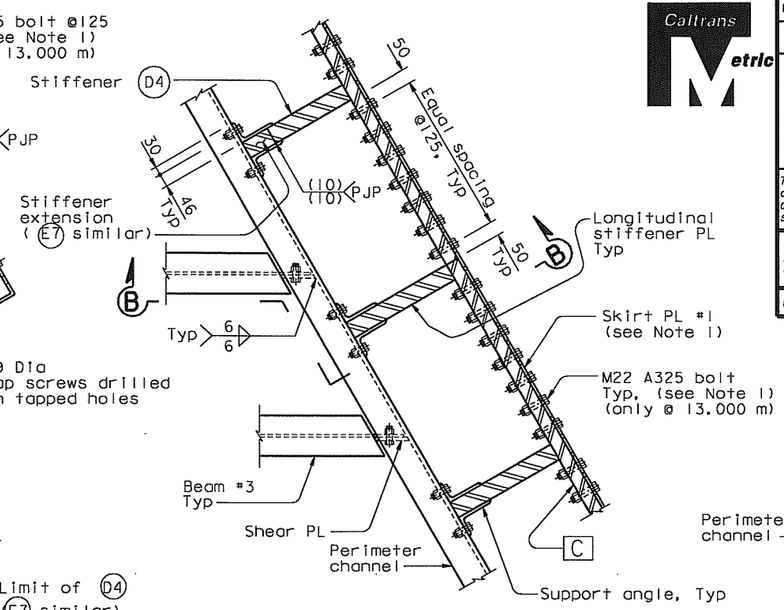

DETAIL C (Diaphragm plate not shown for clarity)
1:10

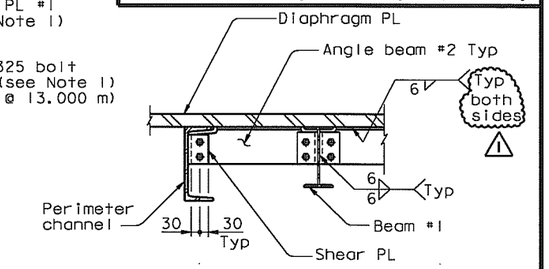

SECTION D-D
1:10

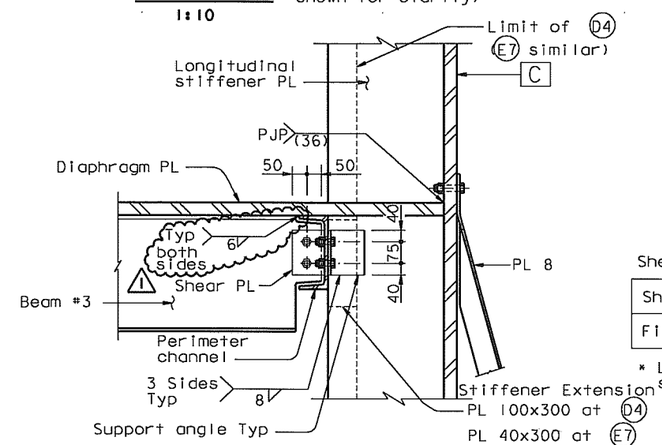

SECTION B-B
1:10

Bolted Connection Schedule

Connecting Elements	Bolts	Edge Distance	Bolt Spacing
W to C	2, M20 A325-X	40 mm	75 mm
W to W	2, M20 A325-X	40 mm	75 mm
W to Tower	2, M20 A325-X	40 mm	75 mm
W to L	2, M16 A325-X	25 mm	50 mm
C to L	2, M16 A325-X	25 mm	50 mm
L to Tower	2, M16 A325-X	25 mm	50 mm
C to Tower	M16 A325-X	Stitch Bolting Max=130 mm	
C to Longitudinal Stiffener	4, M20 A325-X	40 mm	75 mm
C to C	2, M20 A325-X	40 mm	75 mm

Shear Tab Detail

Shear PL	12 mm
Fillet Weld Leg Size*	6 mm

* Leg size on either side of the shear plate.

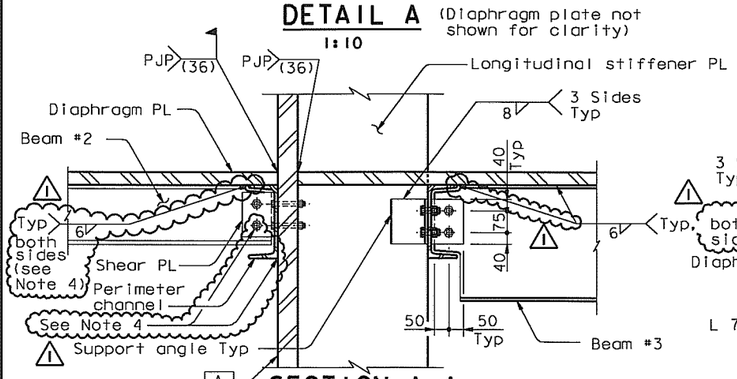

SECTION A-A
1:10

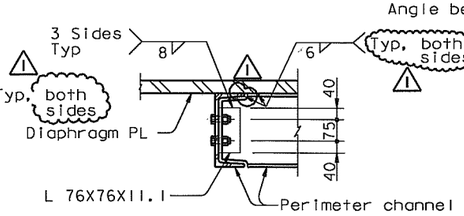

SECTION C-C
1:10

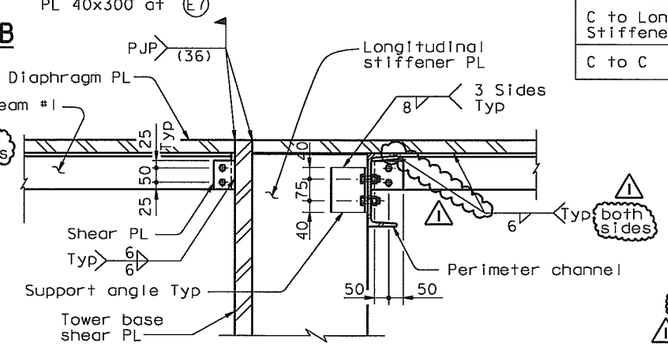

SECTION E-E
1:10

NOTES:

1. Tower skirt not shown for clarity. For tower skirt details, see "Tower Skirt Details" sheets.
2. Details shown in this sheet do not account for the 1% slope of diaphragm at elevation 13 m. The fabrication of these details shall account for this slope.
3. For section E'-E', see "Tower Diaphragm Details No. 17" sheet.
4. To facilitate erection, shim plates are allowed between perimeter channel and tower skin PL, alternatively perimeter channels may be attached using field welds and bolts in slotted holes.

REQUESTS FOR INFORMATION NOT ADDRESSED IN THIS CCO REMAIN IN FORCE

ALL DIMENSIONS ARE IN MILLIMETERS UNLESS OTHERWISE SHOWN

R. Valizadeh/V. Toan/Y.L./W.L./F.C.
DESIGN OVERSIGHT
SIGN OFF DATE 07/11/08
Rev. Date: 5-18-98

MARK	DATE	DESCRIPTIONS	BY	CH'D	CCO#
1	07/11/08	TOWER INTERNAL SHAFT	MN	NV	63

REVISIONS

CONTRACT CHANGE ORDER NO. ____
SHEET ____ OF ____

DESIGN	BY M. Nader	CHECKED M. Gulyas	
DETAILS	BY L. Rus	CHECKED M. Gulyas	
QUANTITIES	BY L. Rus	CHECKED Y. Zhang	

ORIGINAL SCALE IN MILLIMETERS FOR REDUCED PLANS 0 10 20 30 40 50 60 70 80 90 100

PREPARED FOR THE STATE OF CALIFORNIA DEPARTMENT OF TRANSPORTATION

R. Manzanarez
PROJECT ENGINEER

CU 04
EA 0120F1

BRIDGE NO. 34-0006L/R
KILOMETER POST 13.2/13.9

SAN FRANCISCO OAKLAND BAY BRIDGE
EAST SPAN SEISMIC SAFETY PROJECT
SELF-ANCHORED SUSPENSION BRIDGE
(SUPERSTRUCTURE & TOWER)

TOWER DIAPHRAGM DETAILS NO. 15

DISREGARD PRINTS BEARING EARLIER REVISION DATES → 05/27/01 02/08/02 01/29/02 12/18/02 11/13/05

SHEET 173R1 OF

FILE => I:\bb\04-0120F1\sas\contract plans and cco\cco\in progress\cco#63\dgn\aetdh12.dgn

USERNAME => vignatovsk DATE PLOTTED => 11 JUL 2008 TIME PLOTTED => 13:20:52

100 % PS&E

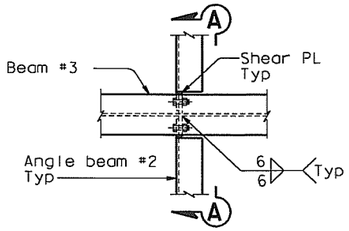

DETAIL D (Diaphragm plate not shown for clarity)
1:10

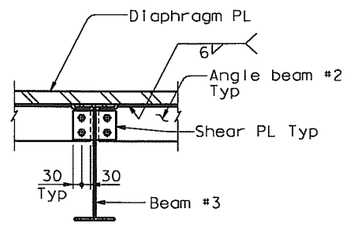

SECTION A-A
1:10

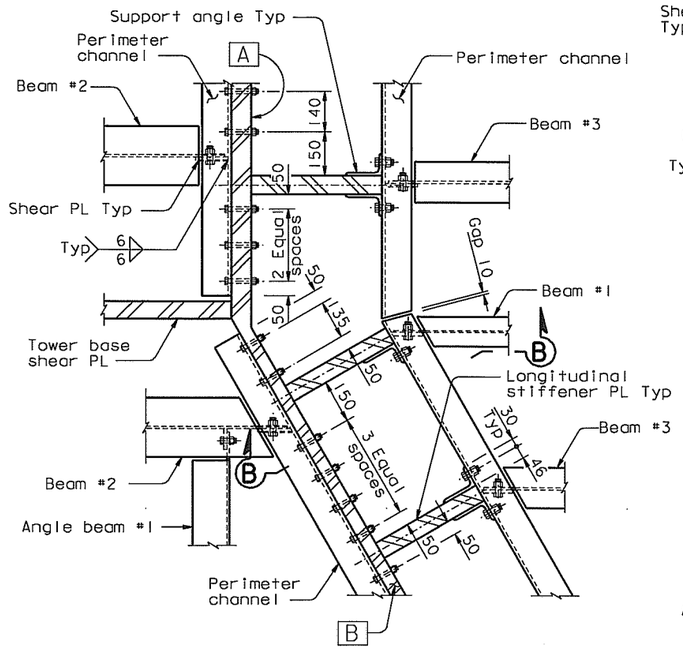

DETAIL F (Diaphragm plate not shown for clarity)
1:10

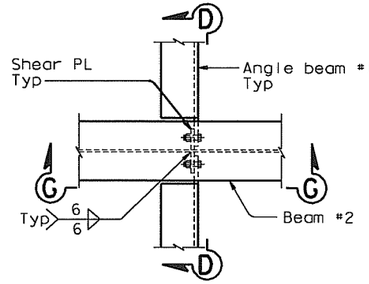

DETAIL G (Diaphragm plate not shown for clarity)
1:10

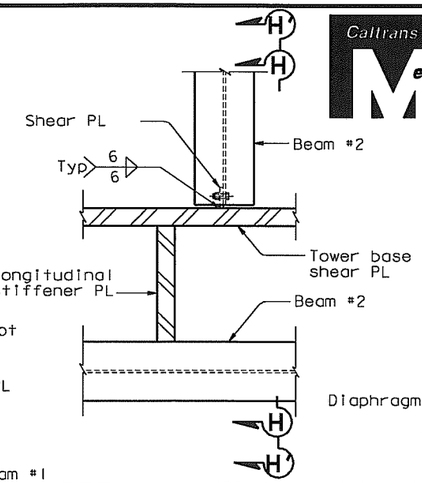

DETAIL H (Diaphragm plate not shown for clarity)
1:10

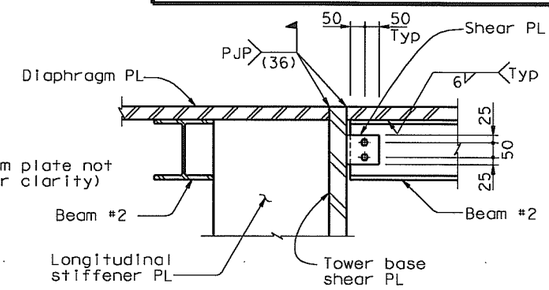

SECTION H-H
1:10

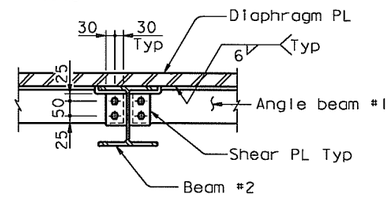

SECTION D-D
1:10

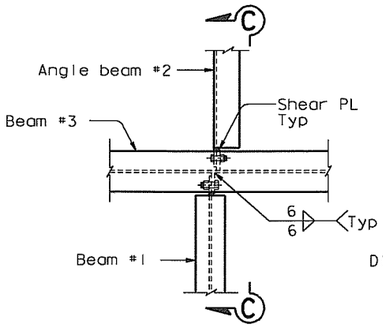

DETAIL E (Diaphragm plate not shown for clarity)
1:10

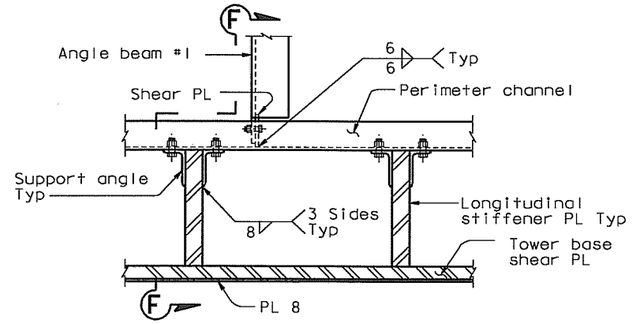

DETAIL J (Diaphragm plate not shown for clarity)
1:10

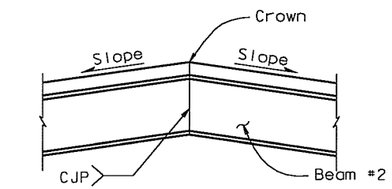

SECTION G-G
NTS
(Crown detail for diaphragm at Elev 13 m, Slope exaggerated for clarity)

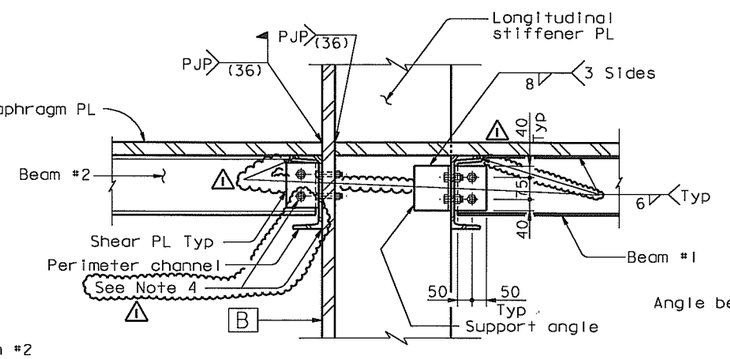

SECTION B-B
1:10

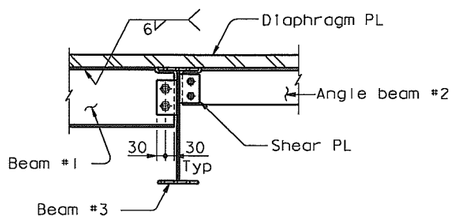

SECTION C-C
1:10

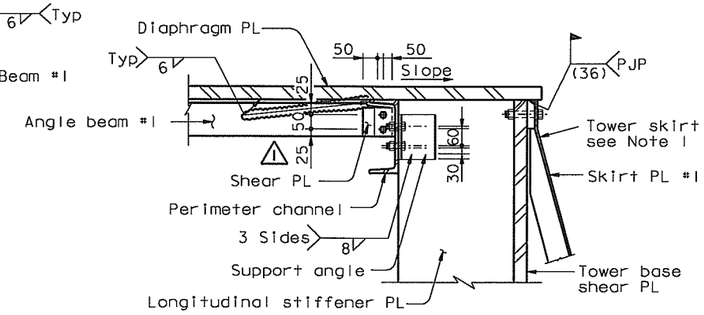

SECTION F-F
1:10

NOTES:

1. For tower skirt details, see "Tower Skirt Details" sheets.
2. Details shown in this sheet do not account for the 1% slope of diaphragm at elevation 13 m. The fabrication of these details shall account for this slope.
3. For section H'-H', see "Tower Diaphragm Details No. 15" sheet.
4. To facilitate erection, shim plates are allowed between perimeter channel and tower skin PL, alternatively perimeter channels may be attached using field welds and bolts in slotted holes. (1)

DIST.	COUNTY	ROUTE	KILOMETER POST TOTAL PROJECT	SHEET NO.	TOTAL SHEETS
04	SF	80	13.2/13.9	591R1	1204

REGISTERED ENGINEER - CIVIL
12-6-04
PLANS APPROVAL DATE

REGISTERED PROFESSIONAL ENGINEER Marwan N. Nader No. C 054426 Exp. 12/31/09 CIVIL STATE OF CALIFORNIA

The State of California or its officers or agents shall not be responsible for the accuracy or completeness of electronic copies of this plan sheet.

T.Y. LIN / MOFFATT & NICHOL
825 BATTERY STREET
SAN FRANCISCO, CA 94111

Caltrans now has a web site! To get to the web site, go to: http://www.dot.ca.gov

Caltrans Metric

REQUESTS FOR INFORMATION NOT ADDRESSED IN THIS CCO REMAIN IN FORCE

ALL DIMENSIONS ARE IN MILLIMETERS UNLESS OTHERWISE SHOWN

R. Valizadeh/V. Toan/Y.L./W.L./F.C.
DESIGN OVERSIGHT
SIGN OFF DATE 07/11/08

MARK	DATE	DESCRIPTIONS	BY	CH'D	CCO#
1	07/11/08	TOWER INTERNAL SHAFT	MN	NV	63

REVISIONS

CONTRACT CHANGE ORDER NO. ____
SHEET ___ OF ___

Rev. Date: 5-18-98

DESIGN	BY M. Nader	CHECKED M. Gulyas	
DETAILS	BY L. Rus	CHECKED M. Gulyas	
QUANTITIES	BY L. Rus	CHECKED Y. Zhang	

PREPARED FOR THE STATE OF CALIFORNIA DEPARTMENT OF TRANSPORTATION

R. Manzanarez
PROJECT ENGINEER

BRIDGE NO. 34-0006L/R
KILOMETER POST 13.2/13.9

SAN FRANCISCO OAKLAND BAY BRIDGE
EAST SPAN SEISMIC SAFETY PROJECT
SELF-ANCHORED SUSPENSION BRIDGE
(SUPERSTRUCTURE & TOWER)

TOWER DIAPHRAGM DETAILS NO. 16

ORIGINAL SCALE IN MILLIMETERS FOR REDUCED PLANS 0 10 20 30 40 50 60 70 80 90 100

CU 04
EA 0120F1

DISREGARD PRINTS BEARING EARLIER REVISION DATES

REVISION DATES (PRELIMINARY STAGE ONLY) 05/27/01 01/08/02 01/30/02 12/19/02 11/13/05

SHEET 174R1 OF

FILE => I:\bb\04-012001\sas\contract plans and cco\cco\in progress\cco#63\dgn\aetdhi3.dgn

100 % PS&E

USERNAME => vignatovsi DATE PLOTTED => 11 JUL 2008 TIME PLOTTED => 13:21:58

DIST.	COUNTY	ROUTE	KILOMETER POST TOTAL PROJECT	SHEET NO.	TOTAL SHEETS
04	SF	80	13.2/13.9	592R2	1204

REGISTERED ENGINEER - CIVIL

12-6-04

PLANS APPROVAL DATE

REGISTERED PROFESSIONAL ENGINEER Marwan N. Nader No. C 054426 Exp. 12/31/09 CIVIL STATE OF CALIFORNIA

The State of California or its officers or agents shall not be responsible for the accuracy or completeness of electronic copies of this plan sheet.

T.Y. LIN / MOFFATT & NICHOL
825 BATTERY STREET
SAN FRANCISCO, CA 94111

Caltrans now has a web site! To get to the web site, go to: http://www.dot.ca.gov

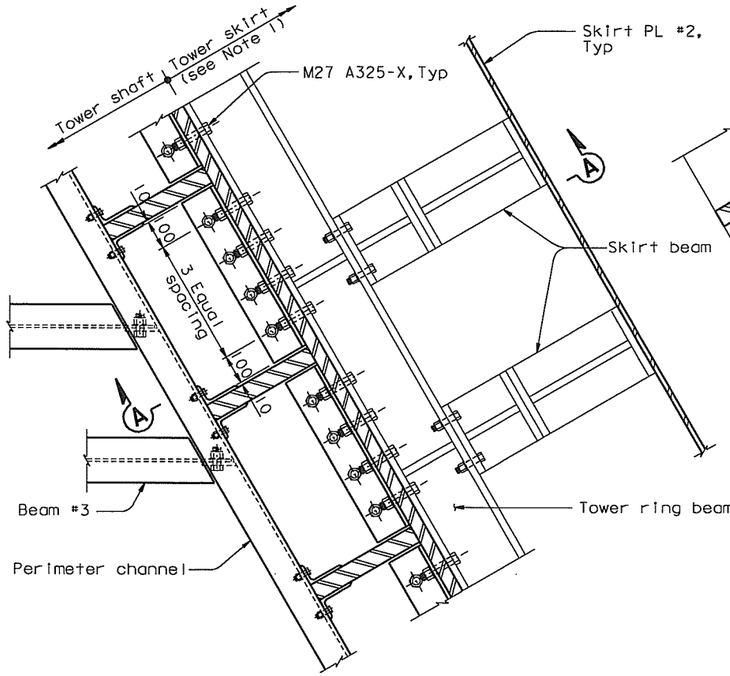

DETAIL C' (Diaphragm plate not shown for clarity)
(Detail at elevation 9.000 m only)
1:10

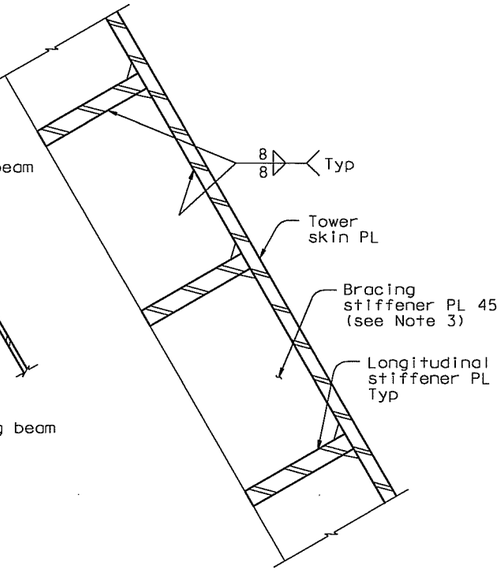

SECTION B-B
1:10

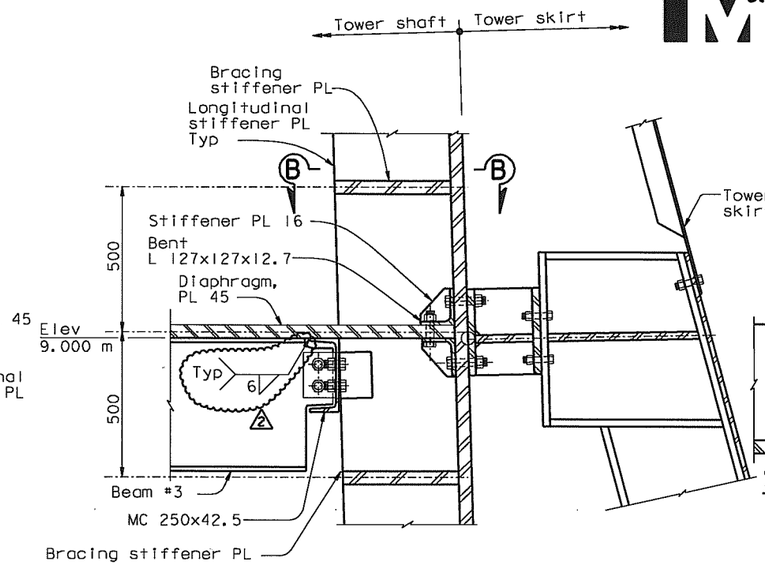

SECTION A-A (A'-A' Sim)
1:10

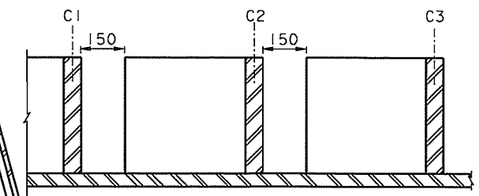

SECTION B-B (at Detail M)
1:10

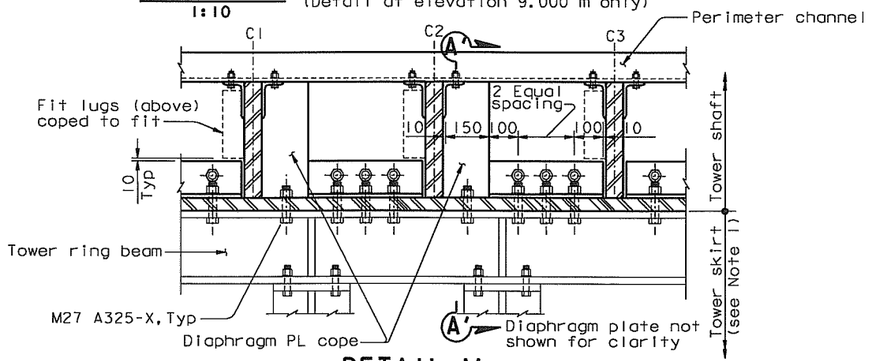

DETAIL M (Detail at elevation 9.000 m only)
1:10

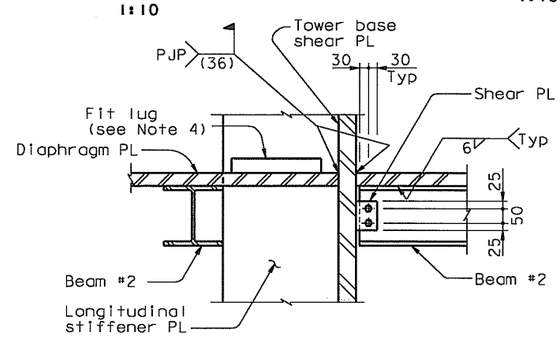

SECTION H'-H'
1:10
(Detail at elevation 9.000 m only)

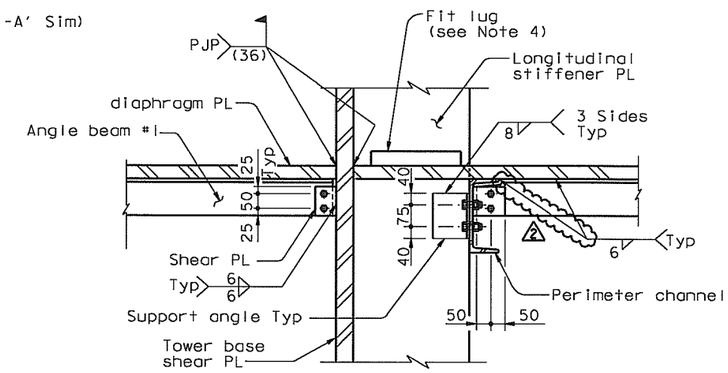

SECTION E'-E'
1:10
(Detail at elevation 9.000 m only)

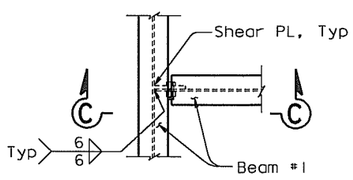

DETAIL K
1:10

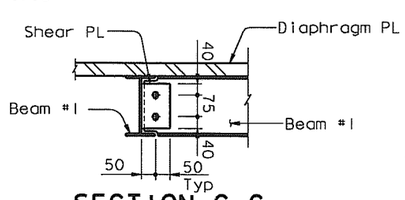

SECTION C-C
1:10

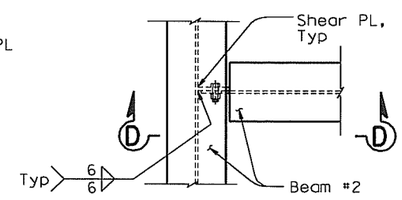

DETAIL L
1:10

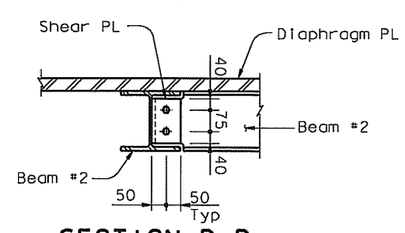

SECTION D-D
1:10

NOTES:

1. For tower skirt details, see "Tower Skirt Details No. 1" sheet.
2. For typical diaphragm cutout around tower longitudinal stiffeners, see "Tower Diaphragm Details No. 6" sheet.
3. Bracing stiffener plates shall be located along tower skin PL C and D, and tower base shear plates a1 and c.
4. Fit lugs for shear plates may be field welded. For fit lug details, see "Tower Diaphragm Details No. 6" sheet.

REQUESTS FOR INFORMATION NOT ADDRESSED IN THIS CCO REMAIN IN FORCE

MARK	DATE	DESCRIPTIONS	BY	CH'D	CCO#
2	07/11/08	TOWER INTERNAL SHAFT	NV	MN	63
1	09/07/07	ELECTRICAL MODIFICATIONS	NV	MN	42

REVISIONS

CONTRACT CHANGE ORDER NO. ____
SHEET ____ OF ____

ALL DIMENSIONS ARE IN MILLIMETERS UNLESS OTHERWISE SHOWN

R. Valizadeh/V. Toan/Y.L./W.L./F.C.
DESIGN OVERSIGHT
SIGN OFF DATE 07/11/08

Rev. Date: 5-18-98

	BY	CHECKED
DESIGN	M. Nader	M. Gulyas
DETAILS	L. Rus	M. Gulyas
QUANTITIES	L. Rus	Y. Zhang

PREPARED FOR THE STATE OF CALIFORNIA DEPARTMENT OF TRANSPORTATION

R. Manzanarez
PROJECT ENGINEER

BRIDGE NO. 34-0006L/R
KILOMETER POST 13.2/13.9

SAN FRANCISCO OAKLAND BAY BRIDGE
EAST SPAN SEISMIC SAFETY PROJECT
SELF-ANCHORED SUSPENSION BRIDGE
(SUPERSTRUCTURE & TOWER)

TOWER DIAPHRAGM DETAILS NO. 17

ORIGINAL SCALE IN MILLIMETERS FOR REDUCED PLANS 0 10 20 30 40 50 60 70 80 90 100

CU 04
EA 0120F1

DISREGARD PRINTS BEARING EARLIER REVISION DATES → 05/31/01 04/09/02 01/07/02 12/13/02 11/13/05

SHEET 175R2 OF

FILE => I:\bb\04-012001\sas\contract plans and cco\cco\in progress\cco#63\dgn\aetdh14.dgn

USERNAME => vignatovsky DATE PLOTTED => 11 JUL 2008 TIME PLOTTED => 13:23:44

100 % PS&E