DIST	COUNTY	ROUTE	KILOMETER POST TOTAL PROJECT	SHEET No	TOTAL SHEETS
04	SF	80	13.2/13.9	72R5	1204

REGISTERED STRUCTURAL ENGINEER 12/19/02 DATE

12-6-04
PLANS APPROVAL DATE

REGISTERED PROFESSIONAL ENGINEER Mee Shing Owyang No. 24960 Exp. 12/31/07 CIVIL STATE OF CALIFORNIA

PARSONS BRINCKERHOFF QUADE & DOUGLAS, INC.
303 SECOND STREET, SUITE 700 N
SAN FRANCISCO, CA 94107

The State of California or its officers or agents shall not be responsible for the accuracy or completeness of electronic copies of this plan sheet.

Caltrans now has a web site! To get to the web site, go to http://www.dot.ca.gov

Caltrans Metric.

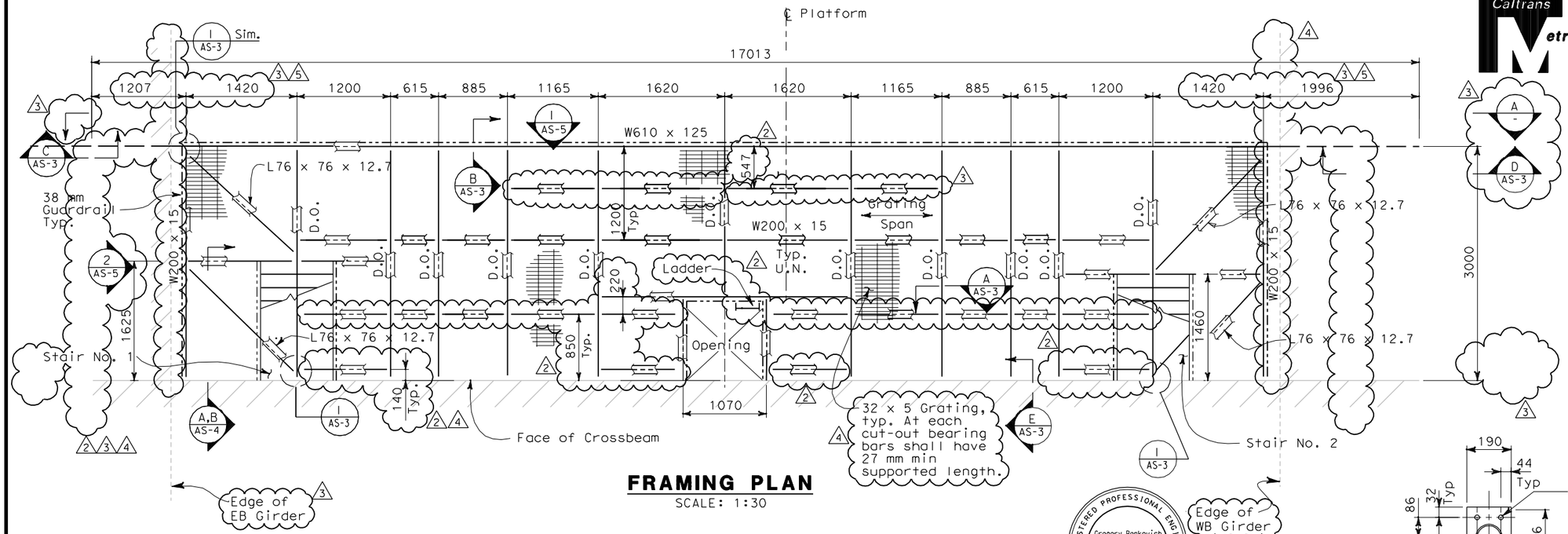

FRAMING PLAN
SCALE: 1:30

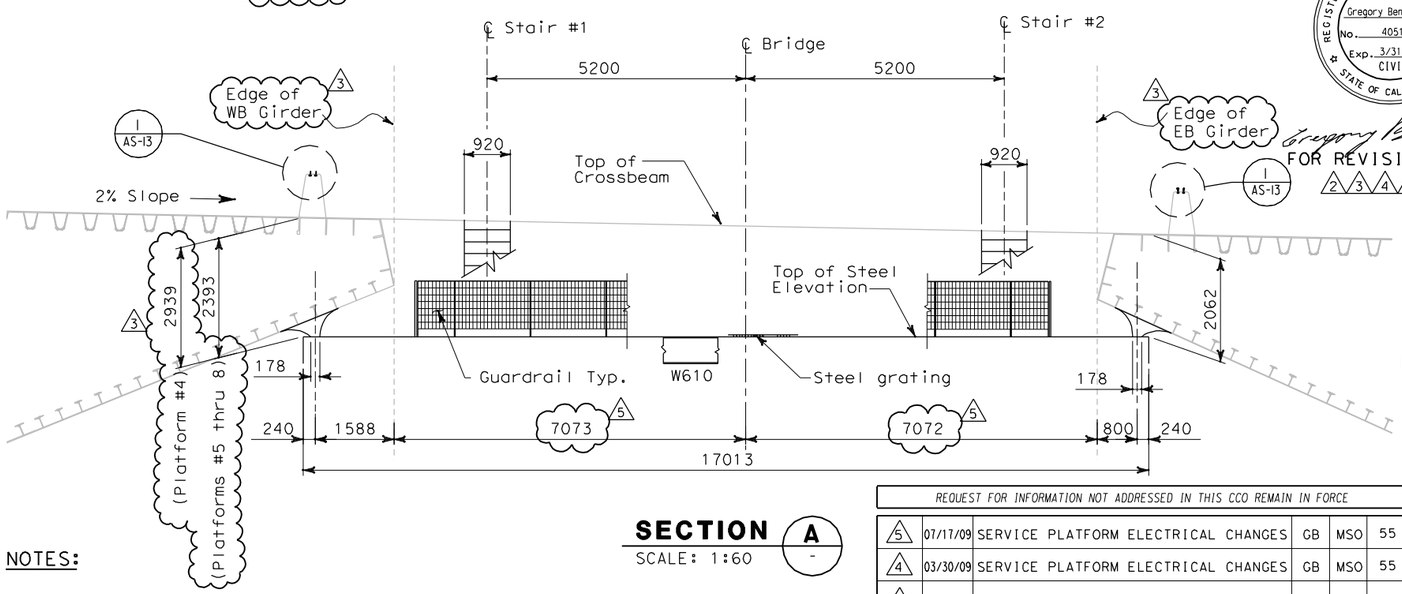

SECTION A
SCALE: 1:60

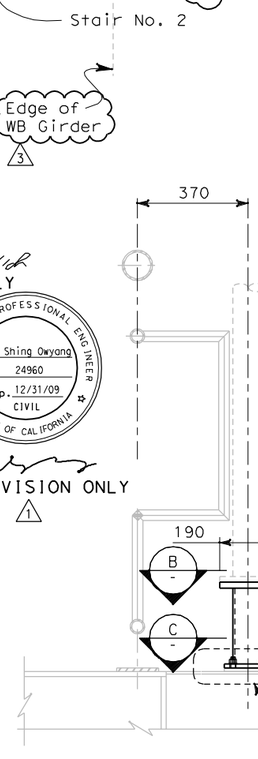

AT BELVEDERE

DETAIL 2
SCALE: 1:10
NOTE 5

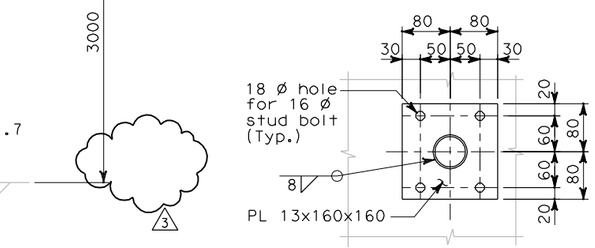

SECTION C
SCALE: 1:5

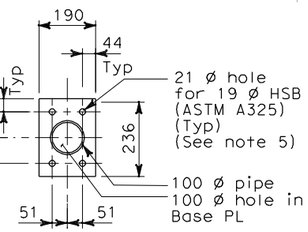

SECTION B
SCALE: 1:10

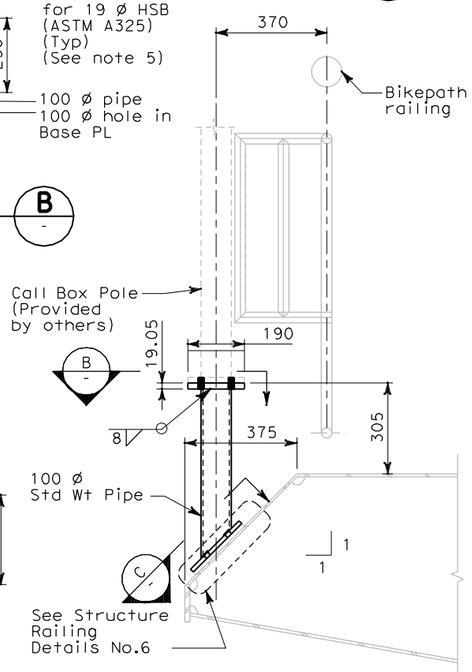

AT BIKE PATH

DETAIL 1
SCALE: 1:10
NOTE 5

ALL DIMENSIONS ARE IN MILLIMETERS UNLESS OTHERWISE SHOWN

REGISTERED PROFESSIONAL ENGINEER Gregory Benkovich No. 40518 Exp. 3/31/11 CIVIL STATE OF CALIFORNIA

FOR REVISION ONLY

REGISTERED PROFESSIONAL ENGINEER Mee Shing Owyang No. 24960 Exp. 12/31/09 CIVIL STATE OF CALIFORNIA

FOR REVISION ONLY

NOTES:

1. Total weight of platform 5987 kg
2. The Contractor shall verify all controlling field dimensions before ordering or fabricating any materials.
3. For platform locations, see electrical plans.
4. For anchor bolt locations, spacing and other requirements, see electrical plan.
5. For Call Box locations, see electrical plan sheet E-397. Bolt hole size and spacings shown are for information only contractor to verify the actual bolt hole size and spacings.

REQUEST FOR INFORMATION NOT ADDRESSED IN THIS CCO REMAIN IN FORCE

MARK	DATE	DESCRIPTIONS	BY	CH'D	CCO#
5	07/17/09	SERVICE PLATFORM ELECTRICAL CHANGES	GB	MSO	55
4	03/30/09	SERVICE PLATFORM ELECTRICAL CHANGES	GB	MSO	55
3	01/07/09	SERVICE PLATFORM ELECTRICAL CHANGES	GB	MSO	55
2	06/12/08	SERVICE PLATFORM ELECTRICAL CHANGES	GB	MSO	55
1	03/04/08	BARRIER MODIFICATIONS.	EL	MI	44

REVISIONS

CONTRACT CHANGE ORDER NO._____
SHEET _____ OF _____

Bob Zandipour
DESIGN OVERSIGHT
4-4-04
SIGN OFF DATE

DESIGN DETAIL SHEET (METRIC) (REV. 3/1/98)

	BY	CHECKED
DESIGN	A. Van Felten	M. S. Owyang
DETAILS	A. Van Felten	M. S. Owyang
QUANTITIES	M.S. Owyang	R. Parrino

ORIGINAL SCALE IN MILLIMETERS FOR REDUCED PLANS 0 10 20 30 40 50 60 70 80 90 100

PREPARED FOR THE STATE OF CALIFORNIA DEPARTMENT OF TRANSPORTATION

Gene Lusherovich
PROJECT ENGINEER

CU 04251
EA 0120F1

BRIDGE NO. 34-0006
KILOMETER POST 13.2/13.9

DISREGARD PRINTS BEARING EARLIER REVISION DATES

REVISION DATES (PRELIMINARY STAGE ONLY)

SAS SUPERSTRUCTURE
SERVICE PLATFORM FRAMING PLAN

SHEET OF

AS-2

$FREQUEST

USERNAME => llorico DATE PLOTTED => 7/17/2009 TIME PLOTTED => 2:39:00 PM

FILE => T:\13103\MS\pse\SAS Struc\CCO\SAS CCO55\2009-07-17_Issued for Submittal\04-0120f1_0072R05.dgn