| DIST | COUNTY | ROUTE | KILOMETER POST TOTAL PROJECT | SHEET No | TOTAL SHEETS |
|---|---|---|---|---|---|
| 04 | SF | 80 | 13.2/13.9 | 83S1 R1 | 1204 |

REGISTERED CIVIL ENGINEER 3/30/09

PLANS APPROVAL DATE

REGISTERED PROFESSIONAL ENGINEER Mee Shing Owyang No. 24960 Exp. 12/31/09 CIVIL STATE OF CALIFORNIA

*The State of California or its officers or agents shall not be responsible for the accuracy or completeness of electronic copies of this plan sheet.*

PB AMERICAS, Inc.
303 Second Street, Suite 700N
San Francisco, CA 94107

*Caltrans now has a web site! To get to the web site, go to: http://www.dot.ca.gov*

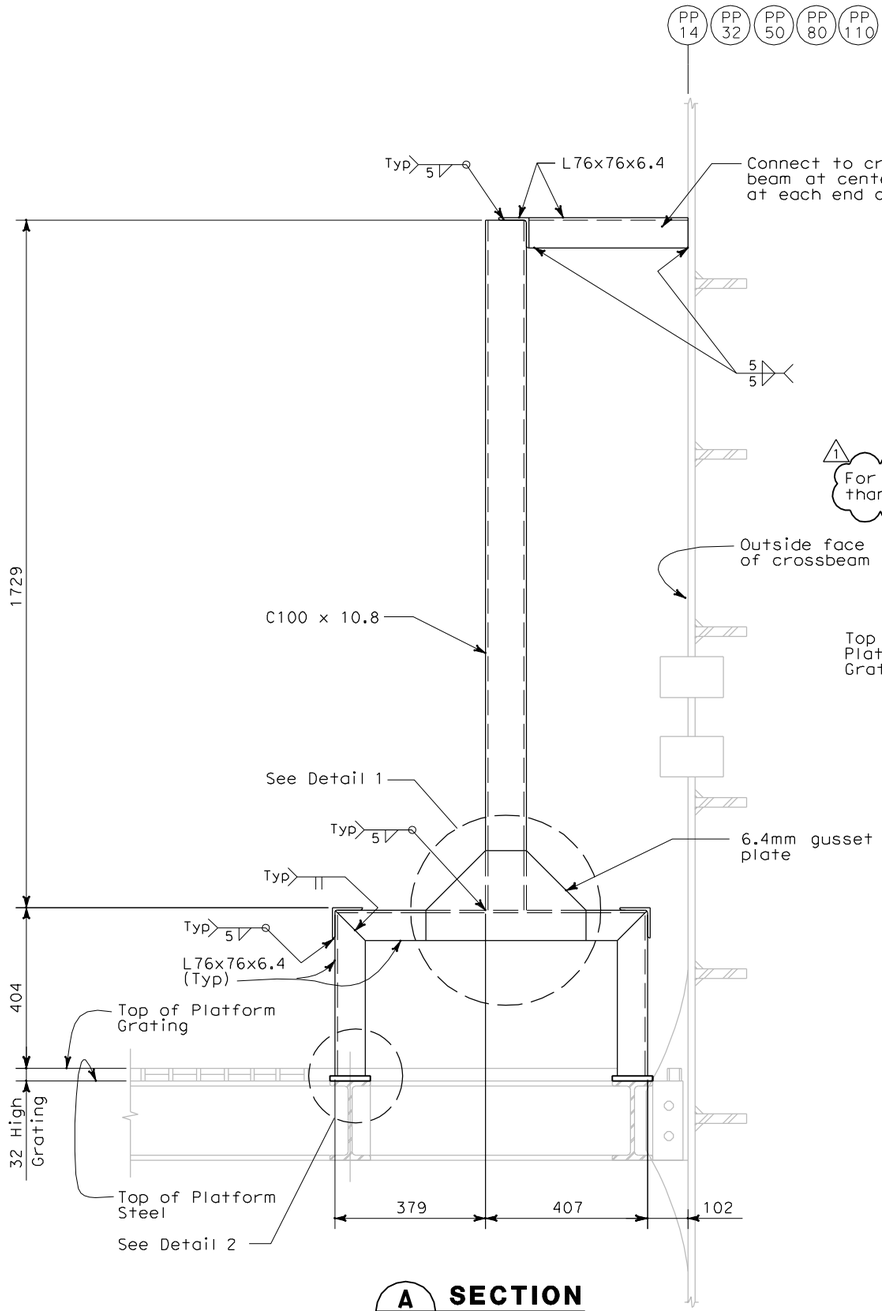


A AS-13 SECTION
NOT TO SCALE

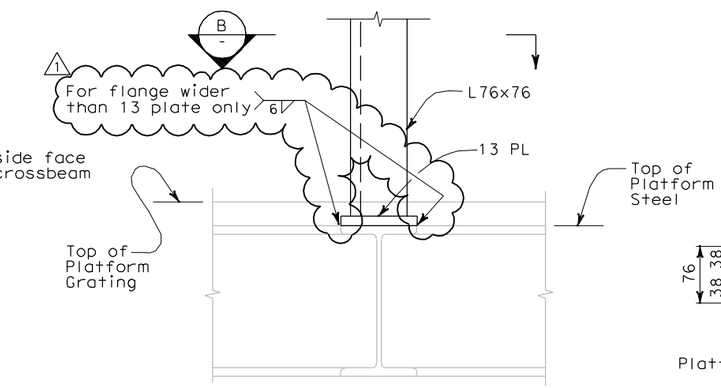


2 - DETAIL
NOT TO SCALE

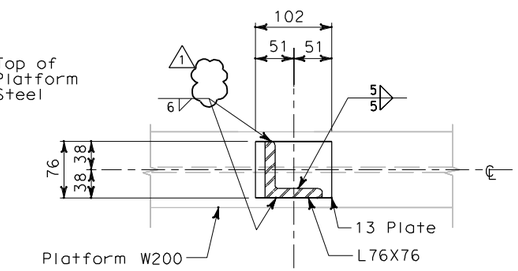


B - SECTION
NOT TO SCALE

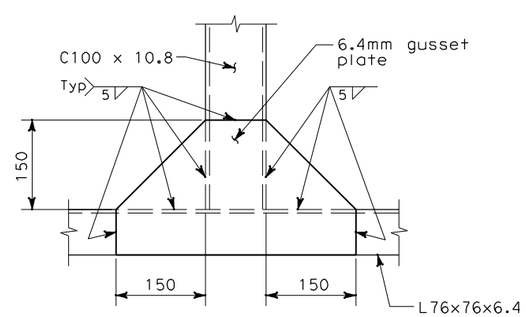


1 - DETAIL
NOT TO SCALE

## NOTES:

1. The contractor shall verify all controlling field dimensions before ordering or fabricating any material.
2. For structural notes, see sheet AS-1.
3. Contractor has the option to perform welds shown on this drawing in the shop or the field.

*REQUEST FOR INFORMATION NOT ADDRESSED IN THIS CCO REMAIN IN FORCE*

| MARK | DATE | DESCRIPTIONS | BY | CH'D | CCO# |
|---|---|---|---|---|---|
| 1 | 07/01/09 | SERVICE PLATFORM ELECTRICAL CHANGES | NK | MSO | 55 |
| 0 | 03/30/09 | SERVICE PLATFORM ELECTRICAL CHANGES | NK | MSO | 55 |

REVISIONS

CONTRACT CHANGE ORDER NO._____
SHEET _____ OF _____

ALL DIMENSIONS ARE IN MILLIMETERS UNLESS OTHERWISE SHOWN

Bob Zandipour
DESIGN OVERSIGHT

SIGN OFF DATE

| | BY | CHECKED |
|---|---|---|
| DESIGN | N. King | M. S. Owyang |
| DETAILS | L. Reyes | M. S. Owyang |
| QUANTITIES | | |

PREPARED FOR THE STATE OF CALIFORNIA DEPARTMENT OF TRANSPORTATION

PROJECT ENGINEER

BRIDGE NO. 34-0006
KILOMETER POST 13.2/13.9

# SAS SUPERSTRUCTURE
## ELECTRICAL PANEL SUPPORT SECTIONS SHEET 1

AS-13A

DESIGN DETAIL SHEET (METRIC) (REV. 3/1/98)

ORIGINAL SCALE IN MILLIMETERS FOR REDUCED PLANS 0 10 20 30 40 50 60 70 80 90 100

CU 04251
EA 0120F1

DISREGARD PRINTS BEARING EARLIER REVISION DATES

REVISION DATES (PRELIMINARY STAGE ONLY) SHEET OF

FILE => T:\13103\MS\pse\SAS Struc\CCO\SAS CCO55\2009-07-01_Issued for Submittal\04-0120f1_0083S01R01.dgn

USERNAME => ricofrent DATE PLOTTED => 7/2/2009 TIME PLOTTED => 1:10:23 PM

$FREQUEST