DIST	COUNTY	ROUTE	KILOMETER POST TOTAL PROJECT	SHEET No	TOTAL SHEETS
04	SF	80	13.2/13.9	72R5	1204

REGISTERED STRUCTURAL ENGINEER — DATE 12/19/02

12-6-04
PLANS APPROVAL DATE

REGISTERED PROFESSIONAL ENGINEER — Mee Shing Owyang — No. 24960 — Exp. 12/31/07 — CIVIL — STATE OF CALIFORNIA

PARSONS BRINCKERHOFF QUADE & DOUGLAS, INC.
303 SECOND STREET, SUITE 700 N
SAN FRANCISCO, CA 94107

The State of California or its officers or agents shall not be responsible for the accuracy or completeness of electronic copies of this plan sheet.

Caltrans now has a web site! To get to the web site, go to http://www.dot.ca.gov

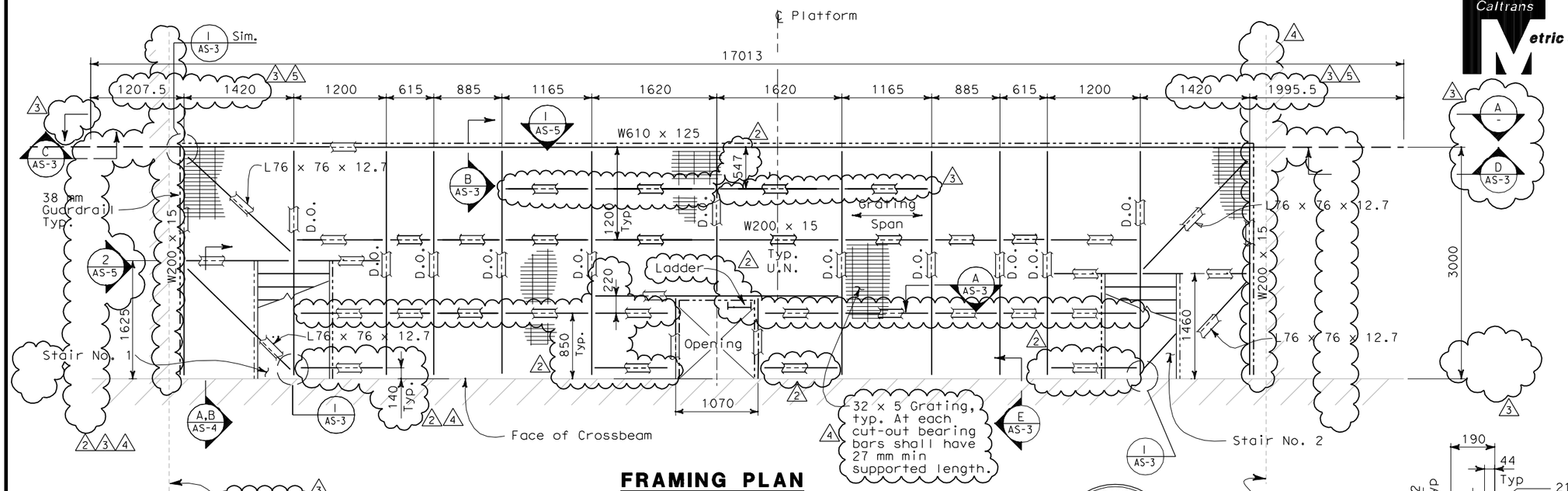

FRAMING PLAN
SCALE: 1:30

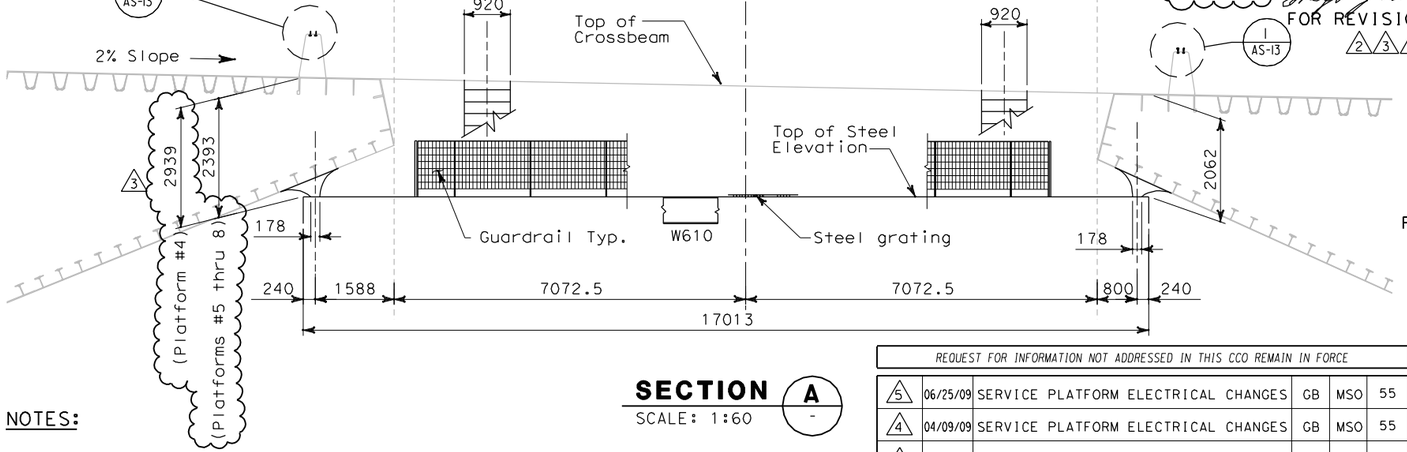

SECTION A
SCALE: 1:60

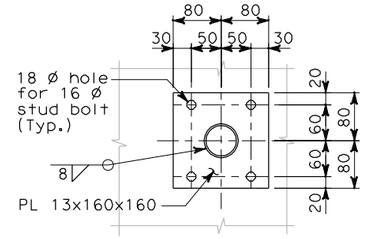

SECTION C
SCALE: 1:5

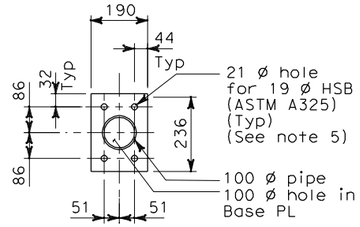

SECTION B
SCALE: 1:10

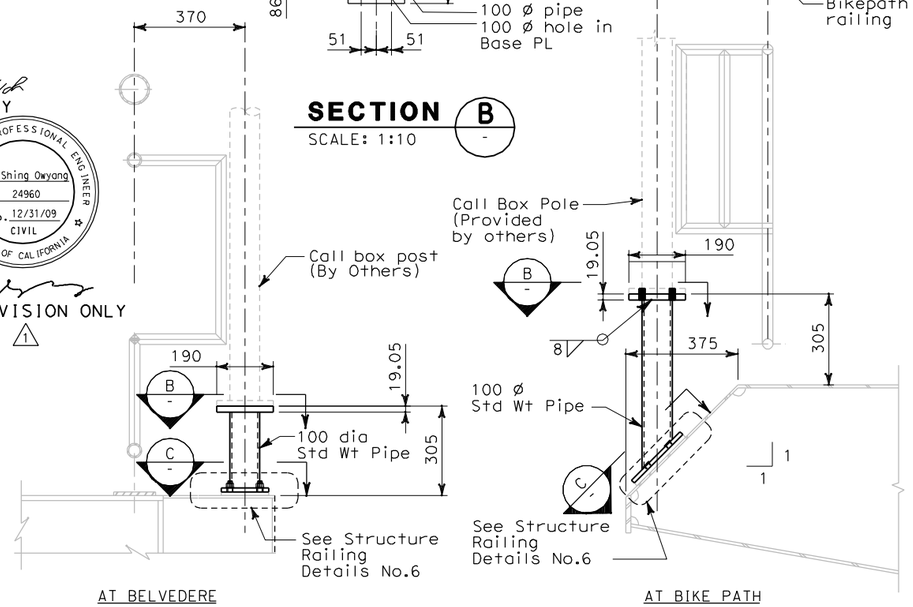

AT BELVEDERE

DETAIL 2
SCALE: 1:10
NOTE 5

AT BIKE PATH

DETAIL 1
SCALE: 1:10
NOTE 5

ALL DIMENSIONS ARE IN MILLIMETERS UNLESS OTHERWISE SHOWN

REGISTERED PROFESSIONAL ENGINEER — Gregory Benkovich — No. 40518 — Exp. 3/31/11 — CIVIL — STATE OF CALIFORNIA

FOR REVISION ONLY

REGISTERED PROFESSIONAL ENGINEER — Mee Shing Owyang — No. 24960 — Exp. 12/31/09 — CIVIL — STATE OF CALIFORNIA

FOR REVISION ONLY

NOTES:

1. Total weight of platform 5987 kg
2. The Contractor shall verify all controlling field dimensions before ordering or fabricating any materials.
3. For platform locations, see electrical plans.
4. For anchor bolt locations, spacing and other requirements, see electrical plan.
5. For Call Box locations, see electrical plan sheet E-397. Bolt hole size and spacings shown are for information only contractor to verify the actual bolt hole size and spacings.

REQUEST FOR INFORMATION NOT ADDRESSED IN THIS CCO REMAIN IN FORCE					
5	06/25/09	SERVICE PLATFORM ELECTRICAL CHANGES	GB	MSO	55
4	04/09/09	SERVICE PLATFORM ELECTRICAL CHANGES	GB	MSO	55
3	01/07/09	SERVICE PLATFORM ELECTRICAL CHANGES	GB	MSO	55
2	06/12/08	SERVICE PLATFORM ELECTRICAL CHANGES	GB	MSO	55
1	03/04/08	BARRIER MODIFICATIONS.	EL	MI	44
MARK	DATE	DESCRIPTIONS	BY	CH'D	CCO#
		REVISIONS			

CONTRACT CHANGE ORDER NO._____
SHEET _____ OF _____

Bob Zandipour
DESIGN OVERSIGHT
4-4-04
SIGN OFF DATE

DESIGN DETAIL SHEET (METRIC) (REV. 3/1/98)

	BY	CHECKED
DESIGN	A. Van Felten	M. S. Owyang
DETAILS	A. Van Felten	M. S. Owyang
QUANTITIES	M.S. Owyang	R. Parrino

PREPARED FOR THE STATE OF CALIFORNIA DEPARTMENT OF TRANSPORTATION

Gene Lusherovich
PROJECT ENGINEER

CU 04251
EA 0120F1

BRIDGE NO. 34-0006
KILOMETER POST 13.2/13.9

SAS SUPERSTRUCTURE
SERVICE PLATFORM FRAMING PLAN
AS-2

DISREGARD PRINTS BEARING EARLIER REVISION DATES →

REVISION DATES (PRELIMINARY STAGE ONLY)

SHEET ____ OF ____

ORIGINAL SCALE IN MILLIMETERS FOR REDUCED PLANS 0 10 20 30 40 50 60 70 80 90 100

$FREQUEST

USERNAME => llorico DATE PLOTTED => 6/25/2009 TIME PLOTTED => 3:32:19 PM

FILE => T:\13103\MS\pse\SAS Struc\CCO\SAS CC055\2009-05-25_Issued for Submittal\04-0120f1_0072R05.dgn

DIST	COUNTY	ROUTE	KILOMETER POST TOTAL PROJECT	SHEET NO	TOTAL SHEETS
04	SF	80	13.2/13.9	75R3	1204

12/19/02
REGISTERED CIVIL ENGINEER

12-6-04
PLANS APPROVAL DATE

REGISTERED PROFESSIONAL ENGINEER — Mee Shing Owyang — No. 24960 — Exp. 12/31/08 — CIVIL — STATE OF CALIFORNIA

The State of California or its officers or agents shall not be responsible for the accuracy or completeness of electronic copies of this plan sheet.

Parsons Brinckerhoff Quade & Douglas, Inc.
303 Second Street, Suite 700N
San Francisco, CA 94107

Caltrans now has a web site! To get to the web site, go to: http://www.dot.ca.gov

1 ELEVATION
AS-2 SCALE: 1:25

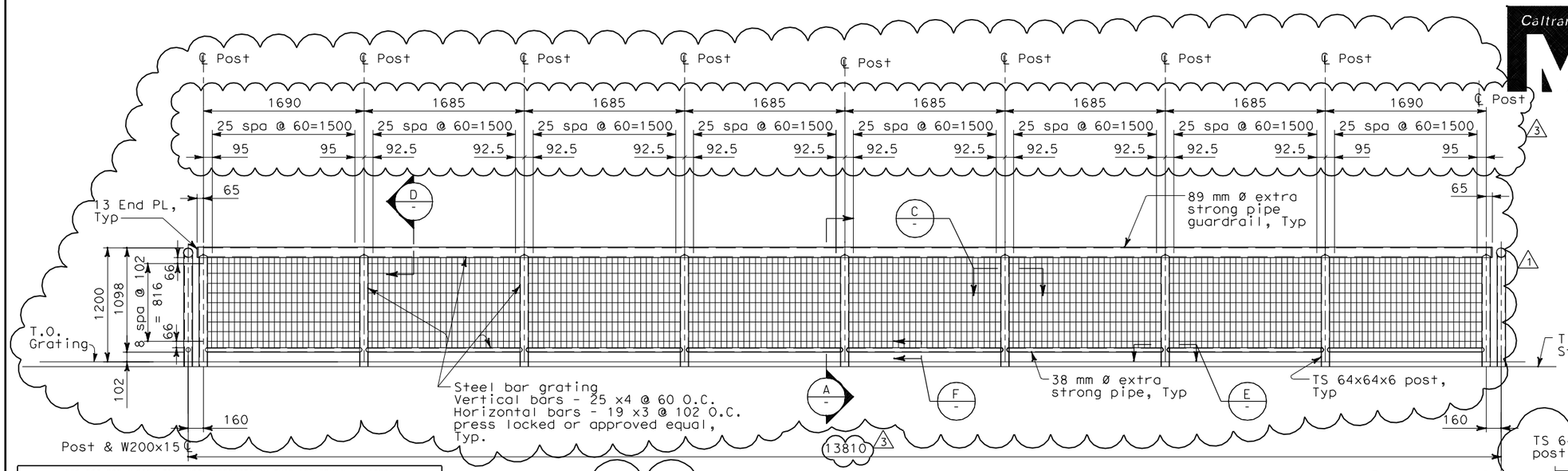

NOTES:

1. The contractor shall verify all controlling field dimensions before ordering or fabricating any material.
2. For structural notes, see sheet AS-1.

MARK	DATE	DESCRIPTIONS	BY	CH'D	CCO#
		REVISIONS			
3	06/25/09	SERVICE PLATFORM ELECTRICAL CHANGES	GB	MSO	55
2	04/09/09	SERVICE PLATFORM ELECTRICAL CHANGES	GB	MSO	55
1	06/12/08	SERVICE PLATFORM ELECTRICAL CHANGES	GB	MSO	55

REQUEST FOR INFORMATION NOT ADDRESSED IN THIS CCO REMAIN IN FORCE

CONTRACT CHANGE ORDER NO. _____
SHEET _____ OF _____

2 ELEVATION
SCALE: 1:25

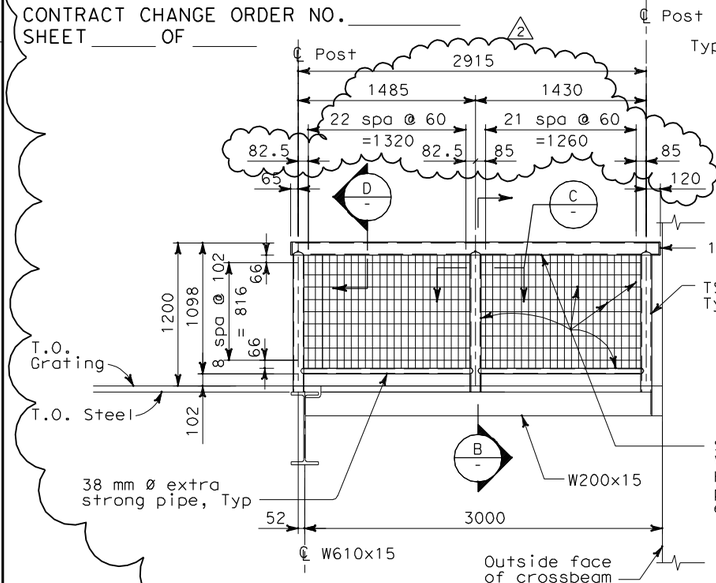

F SECTION
SCALE: 1:5

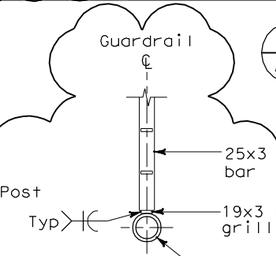

A SECTION
SCALE: 1:10

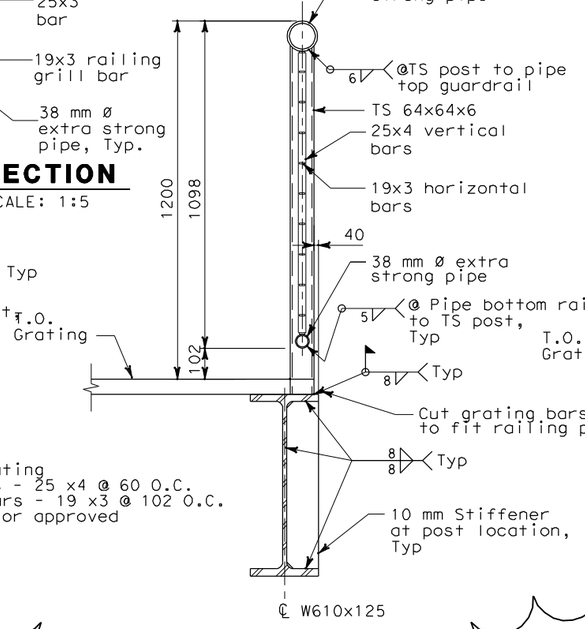

B SECTION
SCALE: 1:10

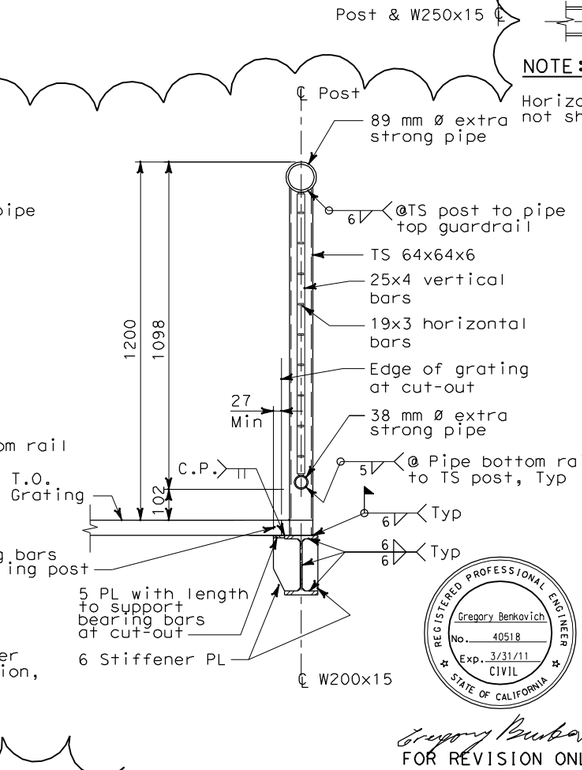

E SECTION
SCALE: 1:5

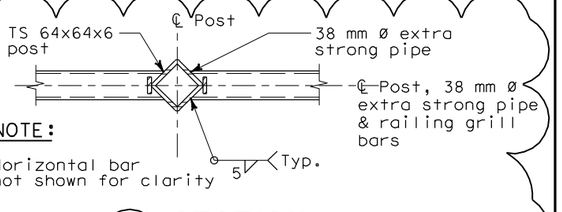

NOTE:
Horizontal bar not shown for clarity

C SECTION
SCALE: 1:5

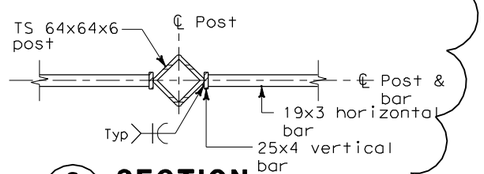

D SECTION
SCALE: 1:5

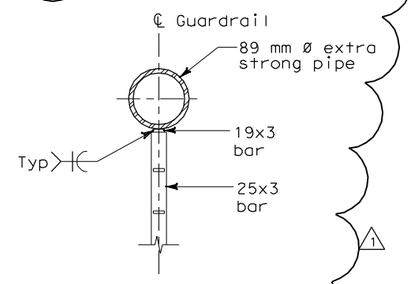

REGISTERED PROFESSIONAL ENGINEER — Gregory Benkovich — No. 40518 — Exp. 3/31/11 — CIVIL — STATE OF CALIFORNIA

Gregory Benkovich
FOR REVISION ONLY
1 2

ALL DIMENSIONS ARE IN MILLIMETERS UNLESS OTHERWISE SHOWN

DESIGN	BY A. Van Felten	CHECKED M.S. Owyang	PREPARED FOR THE STATE OF CALIFORNIA DEPARTMENT OF TRANSPORTATION
LAYOUT	BY A. Van Felten	CHECKED M.S. Owyang	
QUANTITIES	BY M.S. Owyang	CHECKED R. Parrino	

Bob Zandipour
DESIGN OVERSIGHT
4-4-04
SIGN OFF DATE

Brady Nadell
PROJECT ENGINEER

CU 04251
EA 0120F1

BRIDGE NO.	SAS SUPERSTRUCTURE
34-0006	
KILOMETER POST	SERVICE PLATFORM DETAILS
13.2/13.9	AS-5

DISREGARD PRINTS BEARING EARLIER REVISION DATES →

REVISION DATES (PRELIMINARY STAGE ONLY) | SHEET | OF

DESIGN DETAIL SHEET (METRIC) (REV. 3/1/98)

ORIGINAL SCALE IN MILLIMETERS FOR REDUCED PLANS 0 10 20 30 40 50 60 70 80 90 100

DGN FILE => T:\13103\MS\pse\SAS Struc\CCO\SAS CC055\2009-05-25_Issued for Submittal\04-0120f1_0075R03.dgn
USERNAME => llorico

DATE PLOTTED => 6/25/2009 TIME PLOTTED => 3:31:07 PM

$FREQUEST

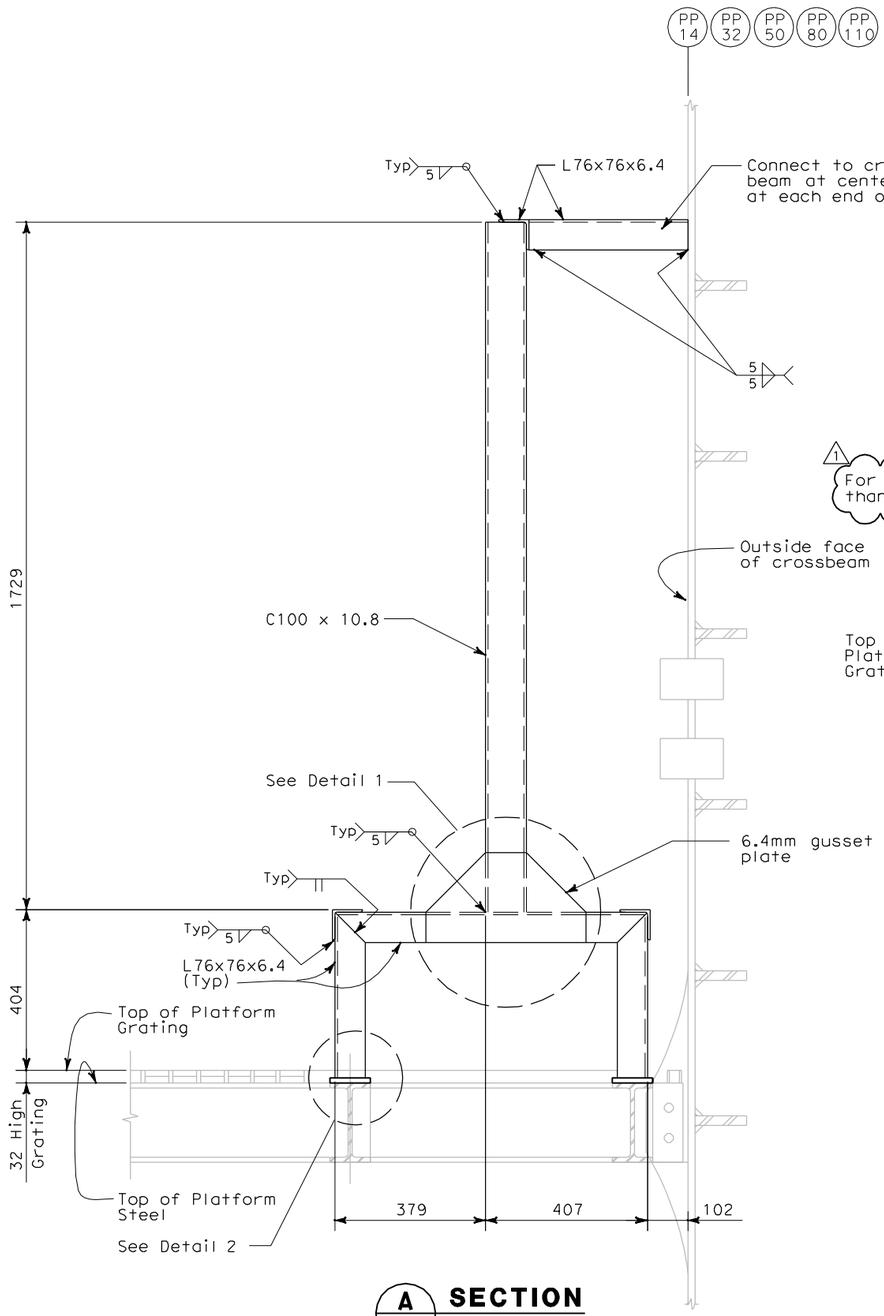

A AS-13 **SECTION**
NOT TO SCALE

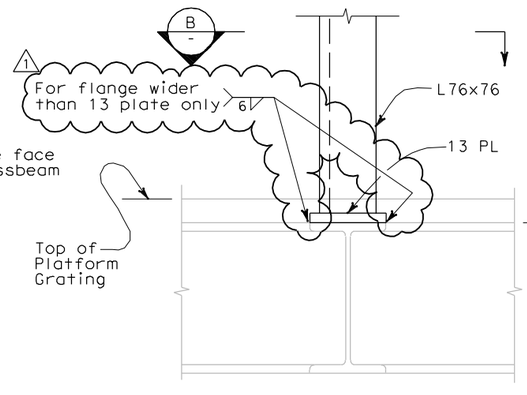

2 - **DETAIL**
NOT TO SCALE

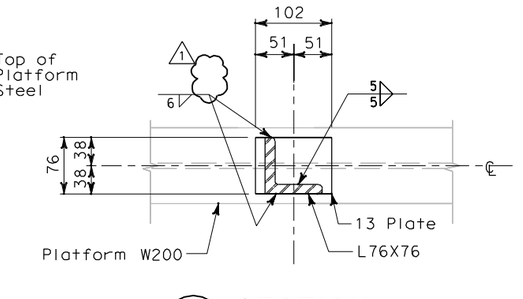

B - **SECTION**
NOT TO SCALE

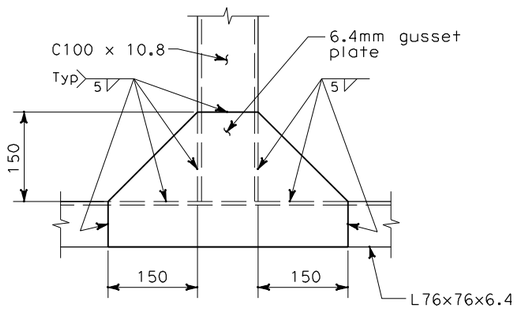

1 - **DETAIL**
NOT TO SCALE

DIST	COUNTY	ROUTE	KILOMETER POST TOTAL PROJECT	SHEET No	TOTAL SHEETS
04	SF	80	13.2/13.9	83S1 R1	1204

REGISTERED CIVIL ENGINEER 3/30/09

PLANS APPROVAL DATE

REGISTERED PROFESSIONAL ENGINEER — Mee Shing Owyang — No. 24960 — Exp. 12/31/09 — CIVIL — STATE OF CALIFORNIA

The State of California or its officers or agents shall not be responsible for the accuracy or completeness of electronic copies of this plan sheet.

PB AMERICAS, Inc.
303 Second Street, Suite 700N
San Francisco, CA 94107

Caltrans now has a web site! To get to the web site, go to: http://www.dot.ca.gov

NOTES:

1. The contractor shall verify all controlling field dimensions before ordering or fabricating any material.
2. For structural notes, see sheet AS-1.
3. Contractor has the option to perform welds shown on this drawing in the shop or the field.

REQUEST FOR INFORMATION NOT ADDRESSED IN THIS CCO REMAIN IN FORCE

MARK	DATE	DESCRIPTIONS	BY	CH'D	CCO#
		REVISIONS			
1	06/25/09	SERVICE PLATFORM ELECTRICAL CHANGES	NK	MSO	55
0	04/09/09	SERVICE PLATFORM ELECTRICAL CHANGES	NK	MSO	55

CONTRACT CHANGE ORDER NO._____
SHEET _____ OF _____

ALL DIMENSIONS ARE IN MILLIMETERS UNLESS OTHERWISE SHOWN

Bob Zandipour
DESIGN OVERSIGHT

SIGN OFF DATE

	BY	CHECKED
DESIGN	N. King	M. S. Owyang
DETAILS	L. Reyes	M. S. Owyang
QUANTITIES		

PREPARED FOR THE STATE OF CALIFORNIA DEPARTMENT OF TRANSPORTATION

PROJECT ENGINEER

BRIDGE NO. 34-0006
KILOMETER POST 13.2/13.9

SAS SUPERSTRUCTURE
ELECTRICAL PANEL SUPPORT SECTIONS SHEET 1

AS-13A

DESIGN DETAIL SHEET (METRIC) (REV. 3/1/98)

ORIGINAL SCALE IN MILLIMETERS FOR REDUCED PLANS 0 10 20 30 40 50 60 70 80 90 100

CU 04251
EA 0120F1

DISREGARD PRINTS BEARING EARLIER REVISION DATES →

REVISION DATES (PRELIMINARY STAGE ONLY)

SHEET ___ OF ___

FILE => T:\13103\MS\pse\SAS Struc\CCO\SAS CCO55\2009-06-25_Issued for Submittal\04-0120f1_0083S01R01.dgn

USERNAME => llorico DATE PLOTTED => 6/26/2009 TIME PLOTTED => 12:01:22 PM

$FREQUEST

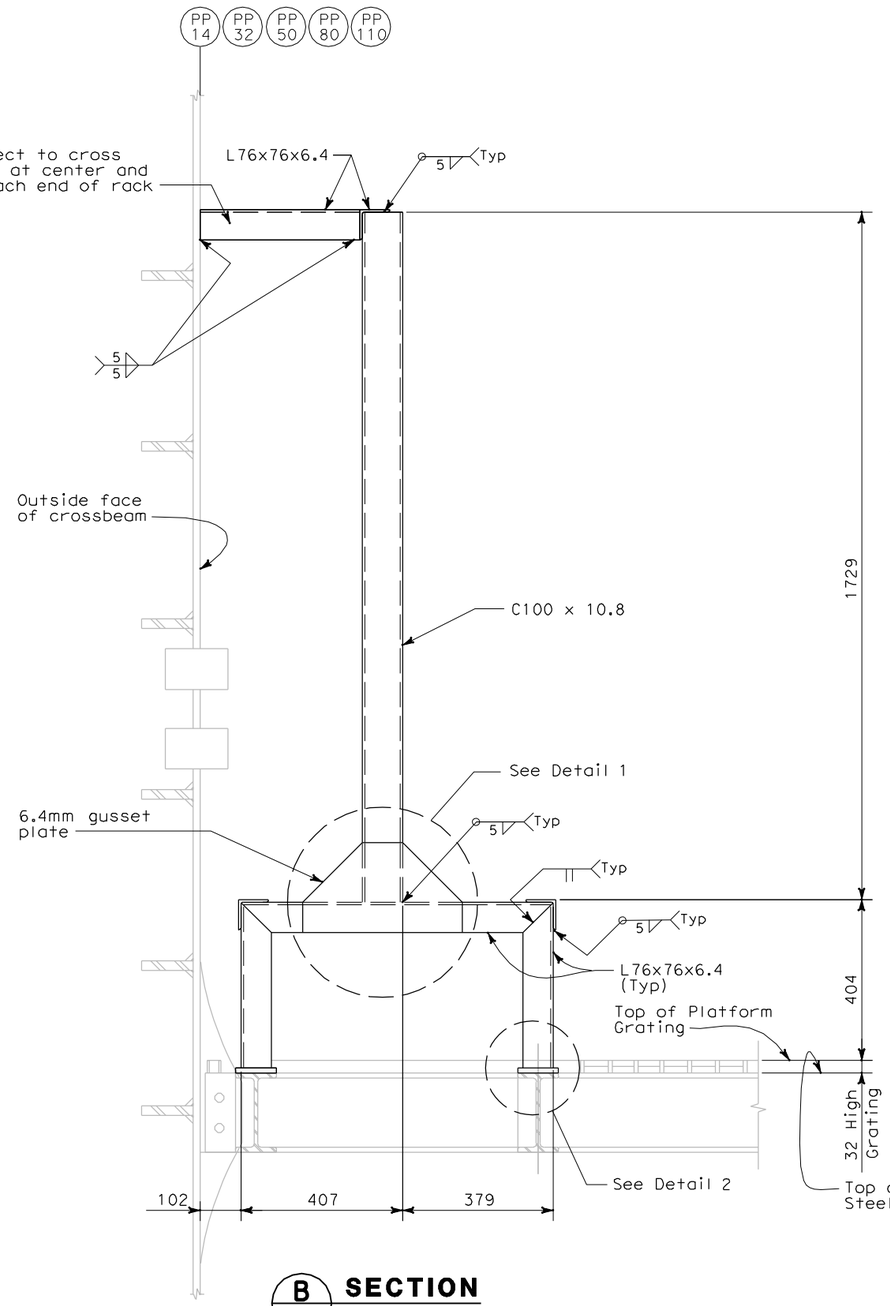

B / AS-13 **SECTION**
NOT TO SCALE

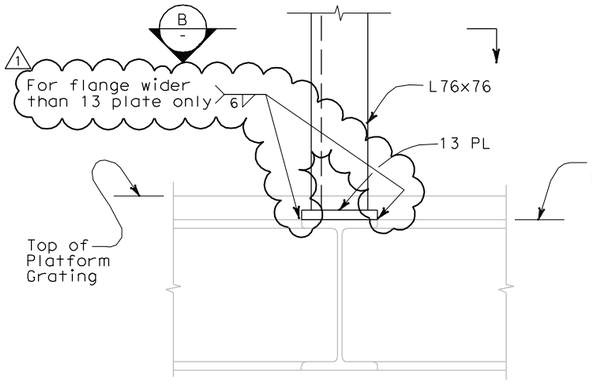

2 / - **DETAIL**
NOT TO SCALE

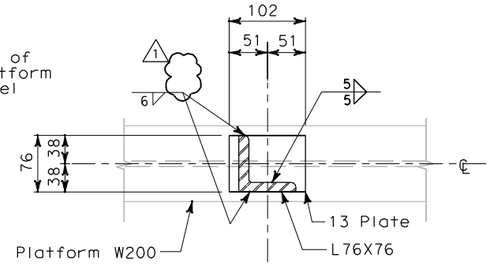

B / - **SECTION**
NOT TO SCALE

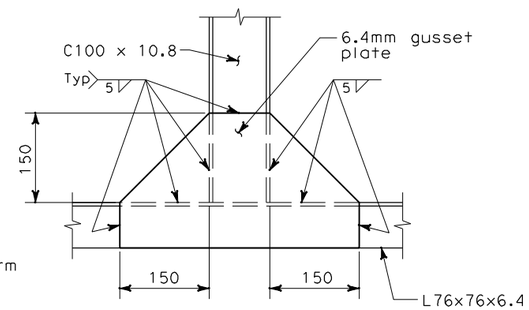

1 / - **DETAIL**
NOT TO SCALE

DIST	COUNTY	ROUTE	KILOMETER POST TOTAL PROJECT	SHEET No	TOTAL SHEETS
04	SF	80	13.2/13.9	83S2 R1	1204

REGISTERED CIVIL ENGINEER 3/30/09

PLANS APPROVAL DATE

REGISTERED PROFESSIONAL ENGINEER — Mee Shing Owyang — No. 24960 — Exp. 12/31/09 — CIVIL — STATE OF CALIFORNIA

The State of California or its officers or agents shall not be responsible for the accuracy or completeness of electronic copies of this plan sheet.

PB AMERICAS, Inc.
303 Second Street, Suite 700N
San Francisco, CA 94107

Caltrans now has a web site! To get to the web site, go to: http://www.dot.ca.gov

NOTES:

1. The contractor shall verify all controlling field dimensions before ordering or fabricating any material.
2. For structural notes, see sheet AS-1.
3. Contractor has the option to perform welds shown on this drawing in the shop or the field.

REQUEST FOR INFORMATION NOT ADDRESSED IN THIS CCO REMAIN IN FORCE

MARK	DATE	DESCRIPTIONS	BY	CH'D	CCO#
		REVISIONS			
1	06/25/09	SERVICE PLATFORM ELECTRICAL CHANGES	NK	MSO	55
0	04/09/09	SERVICE PLATFORM ELECTRICAL CHANGES	NK	MSO	55

CONTRACT CHANGE ORDER NO._____
SHEET _____ OF _____

ALL DIMENSIONS ARE IN MILLIMETERS UNLESS OTHERWISE SHOWN

Bob Zandipour
DESIGN OVERSIGHT

SIGN OFF DATE

	BY	CHECKED
DESIGN	N. King	M. S. Owyang
DETAILS	L. Reyes	M. S. Owyang
QUANTITIES		

PREPARED FOR THE STATE OF CALIFORNIA DEPARTMENT OF TRANSPORTATION

PROJECT ENGINEER

BRIDGE NO.	KILOMETER POST
34-0006	13.2/13.9

SAS SUPERSTRUCTURE
ELECTRICAL PANEL SUPPORT SECTIONS SHEET 2

AS-13B

DESIGN DETAIL SHEET (METRIC) (REV. 3/1/98)

ORIGINAL SCALE IN MILLIMETERS FOR REDUCED PLANS 0 10 20 30 40 50 60 70 80 90 100

CU 04251
EA 0120F1

DISREGARD PRINTS BEARING EARLIER REVISION DATES →

REVISION DATES (PRELIMINARY STAGE ONLY)

SHEET ___ OF ___

FILE => T:\13103\MS\pse\SAS Struc\CCO\SAS CCO55\2009-06-25_Issued for Submittal\04-0120f1_0083S02R01.dgn

USERNAME => llorico DATE PLOTTED => 6/26/2009 TIME PLOTTED => 12:01:50 PM

$FREQUEST

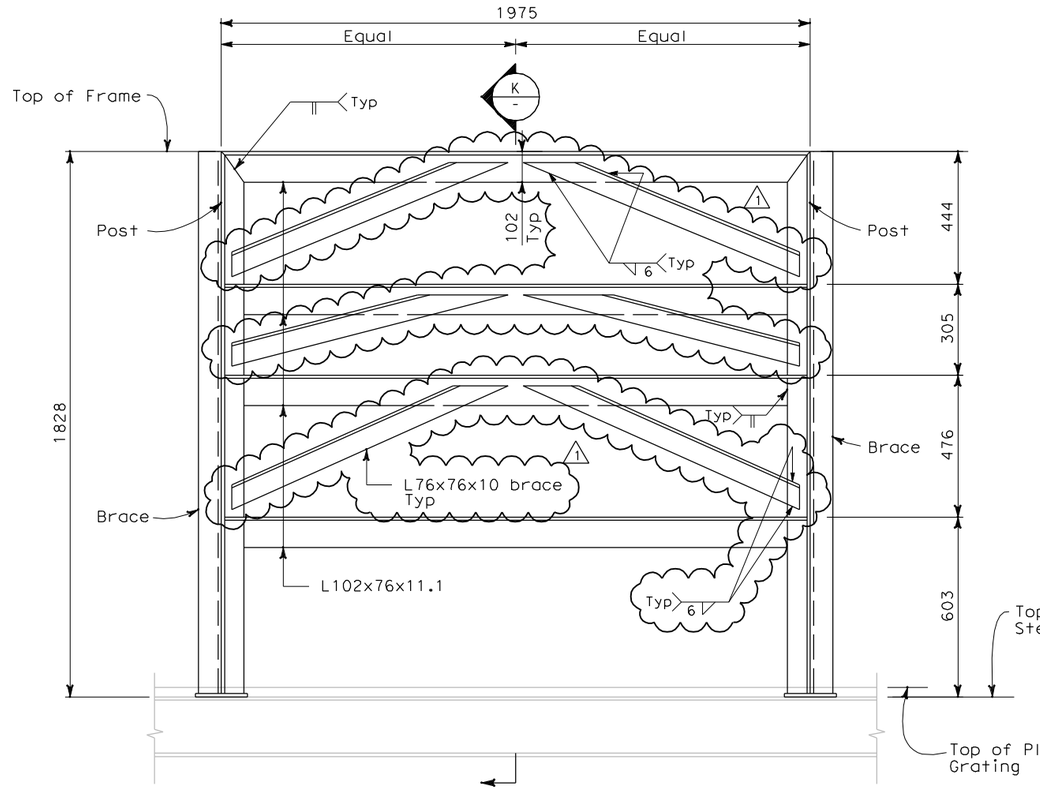

RACK #3 (TRANSFORMER & CIRCUIT BREAKER)

H SECTION
AS-13 NOT TO SCALE

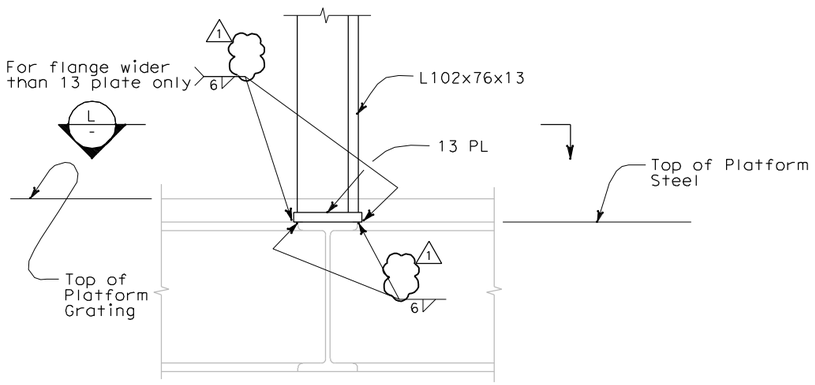

I DETAIL
- NOT TO SCALE

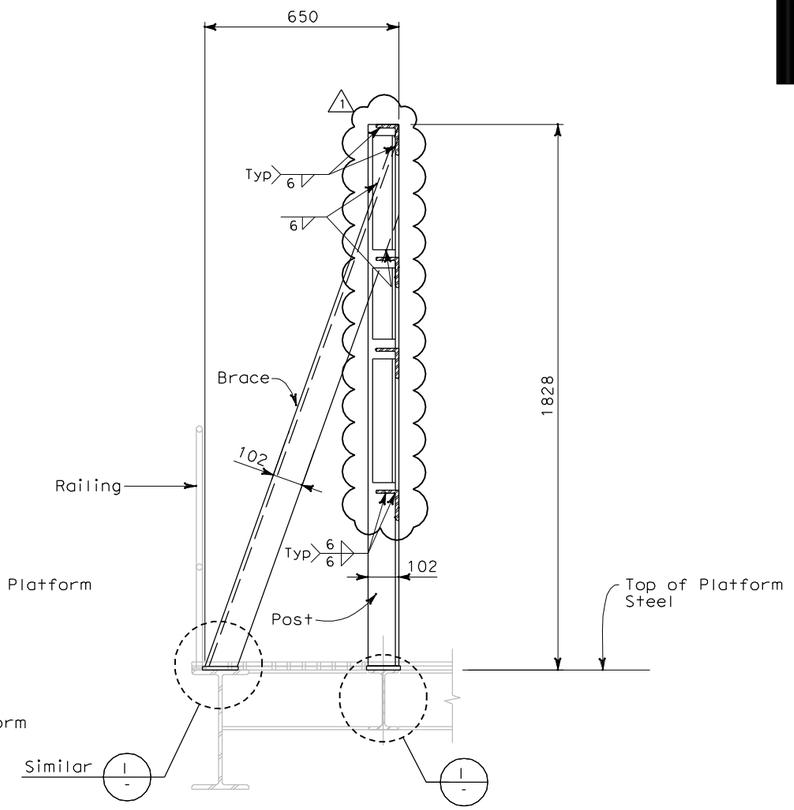

K SECTION
AS-13 NOT TO SCALE

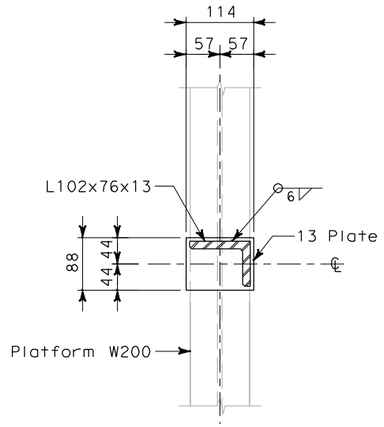

L SECTION
- NOT TO SCALE

Caltrans Metric

DIST	COUNTY	ROUTE	KILOMETER POST TOTAL PROJECT	SHEET No	TOTAL SHEETS
04	SF	80	13.2/13.9	83S3 R1	1204

Gregory Benkovich
REGISTERED CIVIL ENGINEER

PLANS APPROVAL DATE

REGISTERED PROFESSIONAL ENGINEER — Gregory Benkovich — No. 40518 — Exp. 3/31/11 — CIVIL — STATE OF CALIFORNIA

The State of California or its officers or agents shall not be responsible for the accuracy or completeness of electronic copies of this plan sheet.

PB AMERICAS, Inc.
303 Second Street, Suite 700N
San Francisco, CA 94107

Caltrans now has a web site! To get to the web site, go to: http://www.dot.ca.gov

NOTES:

1. The contractor shall verify all controlling field dimensions before ordering or fabricating any material.
2. For structural notes, see sheet AS-1.
3. Unless otherwise noted, all framing elements are L102x76x13.
4. Contractor has the option to perform welds shown on this drawing in the shop or in the field.

REQUEST FOR INFORMATION NOT ADDRESSED IN THIS CCO REMAIN IN FORCE

MARK	DATE	DESCRIPTIONS	BY	CH'D	CCO#
		REVISIONS			
1	06/25/09	SERVICE PLATFORM ELECTRICAL CHANGES	GB	MSO	55
0	04/09/09	SERVICE PLATFORM ELECTRICAL CHANGES	GB	MSO	55

CONTRACT CHANGE ORDER NO._____
SHEET _____ OF _____

ALL DIMENSIONS ARE IN
MILLIMETERS UNLESS OTHERWISE SHOWN

Bob Zandipour
DESIGN OVERSIGHT

SIGN OFF DATE

DESIGN DETAIL SHEET (METRIC) (REV. 3/1/98)

	BY	CHECKED
DESIGN	G. Benkovich	M. S. Owyang
DETAILS	L. Reyes	M. S. Owyang
QUANTITIES		

PREPARED FOR THE
STATE OF CALIFORNIA
DEPARTMENT OF TRANSPORTATION

PROJECT ENGINEER

BRIDGE NO. 34-0006
KILOMETER POST 13.2/13.9

SAS SUPERSTRUCTURE
ELECTRICAL PANEL SUPPORT SECTIONS SHEET 3

AS-13C

ORIGINAL SCALE IN MILLIMETERS FOR REDUCED PLANS 0 10 20 30 40 50 60 70 80 90 100

CU 04251
EA 0120F1

DISREGARD PRINTS BEARING EARLIER REVISION DATES →

REVISION DATES (PRELIMINARY STAGE ONLY)

SHEET OF

FILE => T:\13103\MS\pse\SAS Struc\CCO\SAS CC055\2009-06-25_Issued for Submittal\04-0120f1_0083S03R01.dgn

USERNAME => llorico DATE PLOTTED => 6/26/2009 TIME PLOTTED => 12:02:06 PM

$FREQUEST

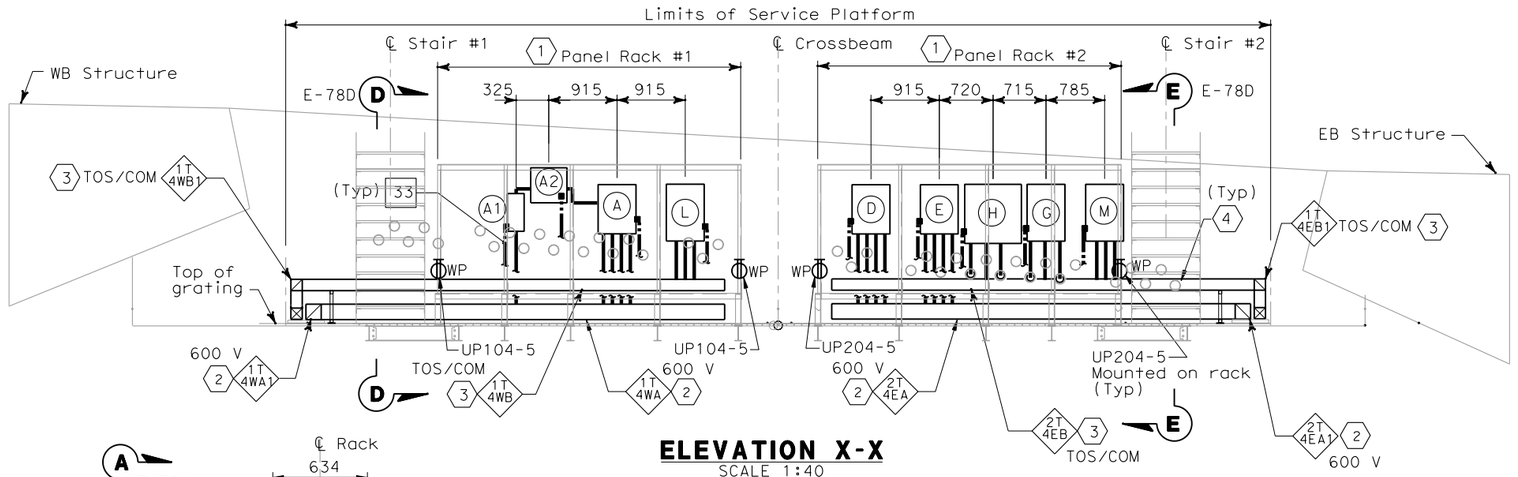

ELEVATION X-X
SCALE 1:40

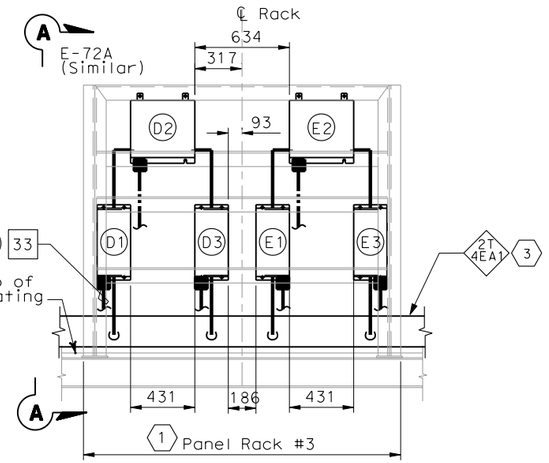

ELEVATION Z-Z
SCALE 1:20

REGISTERED PROFESSIONAL ENGINEER
FADI WALIEDDINE
No. 11465
Exp.12/31/2009 ELECTRICAL
STATE OF CALIFORNIA

FOR REVISION ONLY
1

REQUEST FOR INFORMATION NOT ADDRESSED IN THIS CCO REMAIN IN FORCE					
1	06/25/09	SERVICE PLATFORM ELECTRICAL CHANGES	RR RY	RG FW	55
0	03/30/09	SERVICE PLATFORM ELECTRICAL CHANGES	RR MP	RG FW	55
MARK	DATE	DESCRIPTIONS REVISIONS	BY	CH'D	CCO#

CONTRACT CHANGE ORDER NO._____
SHEET_____ OF _____

SHEET NOTES:

1. For electrical panel support details, see AS-sheets, AS-13, AS-13A and AS-13B.
2. 600 V Stainless steel wireway, Nema 4X with cover.
3. Low level Stainless steel wireway, Nema 4X with cover.
4. Empty conduits shall be capped for future use.

NOTES:

1. Equipment dimensions mounted at panel racks shall be verified by Contractor prior to purchase and installation. Dimensions for equipment location are approximate and may be adjusted to suit field condition.
2. (SP) Denotes spare pipe sleeve for 78 mm conduit. Contractor to provide plug at each ends

Caltrans Metric

DIST	COUNTY	ROUTE	KILOMETER POST TOTAL PROJECT	SHEET No	TOTAL SHEETS
04	SF	80	13.2/13.9	134 S1R1	1204

REGISTERED ELECTRICAL ENGINEER 6/12/08 DATE

REGISTERED PROFESSIONAL ENGINEER
FADI WALIEDDINE
No. 11465
Exp.12/31/2009 ELECTRICAL
STATE OF CALIFORNIA

PLANS APPROVAL DATE

PB AMERICAS, Inc.
A Parsons Brinckerhoff Company
303 Second St., Suite 700N
San Francisco, CA 94107-1317

The State of California or its officers or agents shall not be responsible for the accuracy or completeness of electronic copies of this plan sheet.

Caltrans now has a web site! To get to the web site, go to http://www.dot.ca.gov

WESTBOUND	CONDUIT NUMBERS
(A) Utility Panel, UP-104	4 203D, 4 204A, 4 009, 4 010
(A1) Main Breaker for (A2)	4 203A, 4 203B
(A2) 15 kVA Transformer	4 203B, 4 203C
(L) TOS/COM-4WA Pull Box	4 205A, 4 206A, 4 007A

EASTBOUND	CONDUIT NUMBERS
(D) Utility Panel, UP-204	5 203D, 5 204A, 5 001, 5 002
(D1) Main Breaker for (D2)	5 203A, 5 203B
(D2) 15 kVA Transformer	5 203B, 5 203C
(D3) Feeder Breaker for (D)	5 203C, 5 203E
(E) Lighting Panel LP-219	5 205D, 5 004, 5 005, 5 006
(E1) Main Breaker for (E2)	5 205A, 5 205B
(E2) 15 kVA Transformer	5 205B, 5 205C
(E3) Feeder Breaker for (E)	5 205C, 5 205E
(G) Telephone Terminal Box #TEL-4	5 210, 5 210A, 5 232, 1
(H) Communication Terminal Box #COM-4	5 206, 5 206A, 5 207
(M) TOS/COM-4EA Pull Box	5 207A, 5 230A, 5 231A

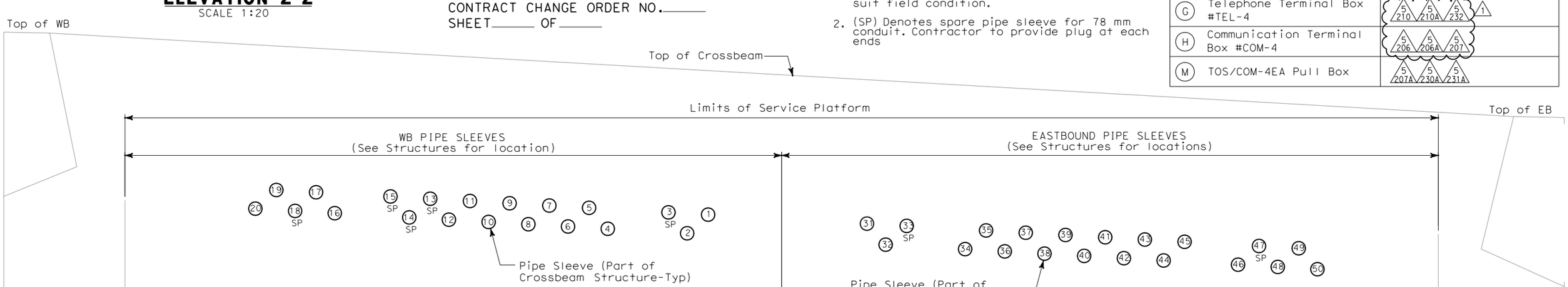

PIPE SLEEVE ELEVATION Y-Y (SEE SHEET E-114)
SCALE 1:20

DETAILS
SAS SUPERSTRUCTURE ROADWAY WESTBOUND PLATFORM 4 ARRANGEMENT
SCALE AS NOTED

E-71A

DESIGN OVERSIGHT: BEHZAD GOLEMOHAMMADI
CALCULATED/DESIGNED BY
CHECKED BY
DATE REVISED BY
DATE REVISED
STATE OF CALIFORNIA - DEPARTMENT OF TRANSPORTATION
Caltrans

LAST REVISION 00-00-00
DATE PLOTTED => 6/25/2009
TIME PLOTTED => 3:21:55 PM

THIS PLAN IS ACCURATE FOR ELECTRICAL WORK ONLY.

ALL DIMENSIONS ARE IN MILLIMETERS UNLESS OTHERWISE SHOWN.

FOR REDUCED PLANS ORIGINAL SCALE IS IN MILLIMETERS 0 20 40 60 80

DGN FILE =>T:\13103\MS\pse\SAS Struc\CCO\SAS CCO55\2009-05-25_Issued for Submittal\04-0120f1_0134S01R01.dgn
USERNAME =>garciar

CU 04251 EA 0120F1

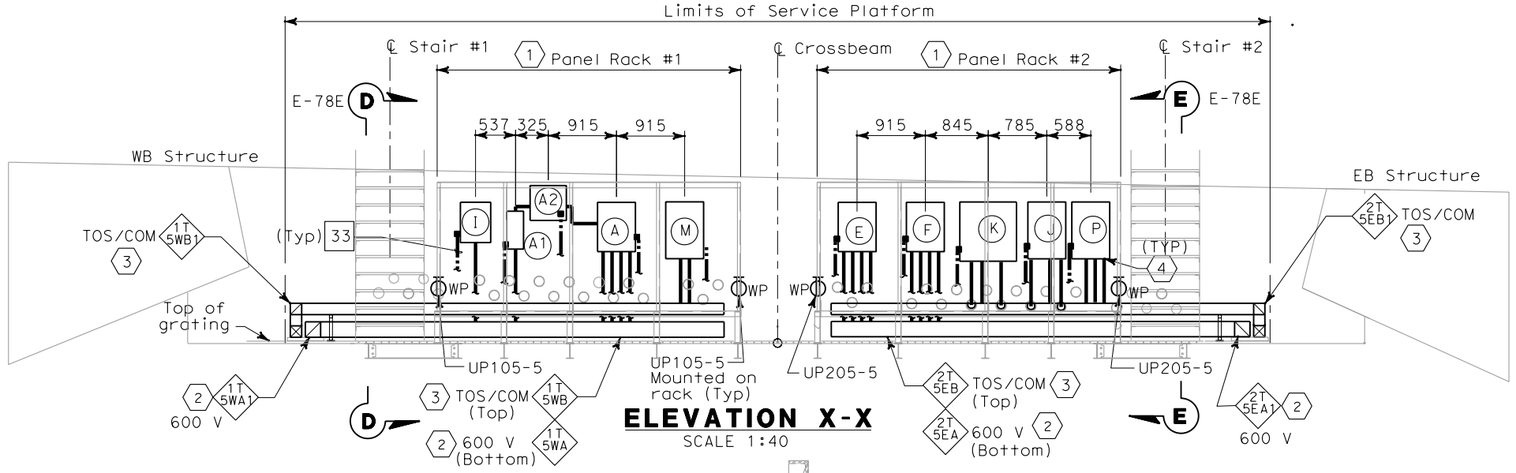

ELEVATION X-X
SCALE 1:40

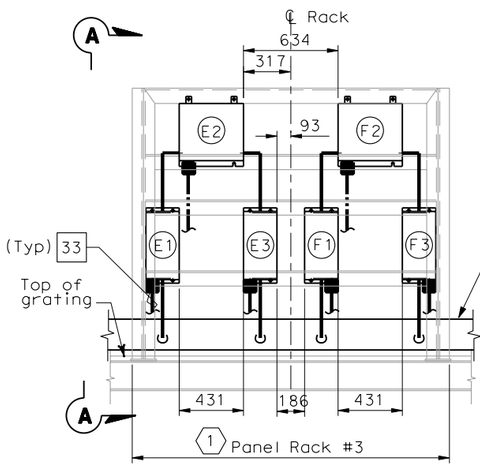

ELEVATION Z-Z
SCALE 1:20

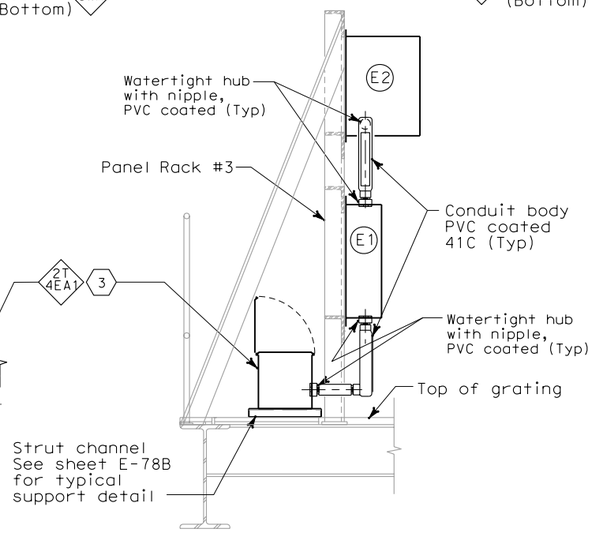

SECTION A-A
NO SCALE
PLATFORM NO. 5 AS SHOWN
(TYPICAL FOR PLATFORMS NOs. 4, 6, 7 AND 8)

SHEET NOTES:

1. For electrical panel support details, see AS-sheets, AS-13, AS-13A and AS-13B.
2. 600 V Stainless Steel Wireway, Nema 4X with cover.
3. Low level Stainless Steel Wireway, Nema 4X with cover.
4. Empty conduits shall be capped for future use.

NOTES:

1. Equipment dimensions mounted at panel racks shall be verified by Contractor prior to purchase and installation. Dimensions for equipment location are approximate and may be adjusted to suit field condition.
2. (SP) Denotes spare pipe sleeve for 78 mm conduit. Contractor to provide plug at each ends

WESTBOUND	CONDUIT NUMBERS
(A) Utility Panel, UP-105	4 223D, 4 224A, 4 033, 4 034
(A1) Main Breaker for (A2)	4 223A, 4 223B
(A2) 15 kVA Transformer	4 223B, 4 223C
(M) TOS/COM-5WA Pull Box	4 225A, 4 226A
(I) Navigation Relay Cabinet NAP-5	4 029

EASTBOUND	CONDUIT NUMBERS
(E) Utility Panel, UP-205	5 223D, 5 224A, 5 026, 5 027
(E1) Main Breaker for (E2)	5 223A, 5 223B
(E2) 15 kVA Transformer	5 223B, 5 223C
(E3) Feeder Circuit Breaker for (E)	5 223C, 5 223E
(F) Lighting Panel LP-220	5 225D, 5 029, 5 030, 5 031
(F1) Main Breaker for (F2)	5 225A, 5 225B
(F2) 15 kVA Transformer	5 225B, 5 225C
(F3) Feeder Circuit Breaker for (F)	5 225C, 5 225E
(J) Telephone Terminal Box #TEL-5	1 5 228, 5 235A, 5 235, 1
(K) Communication Terminal Box #COM-5	5 226, 5 234A, 5 227
(P) TOS/COM-5EA Pull Box	5 226A, 5 227A, 5 233A

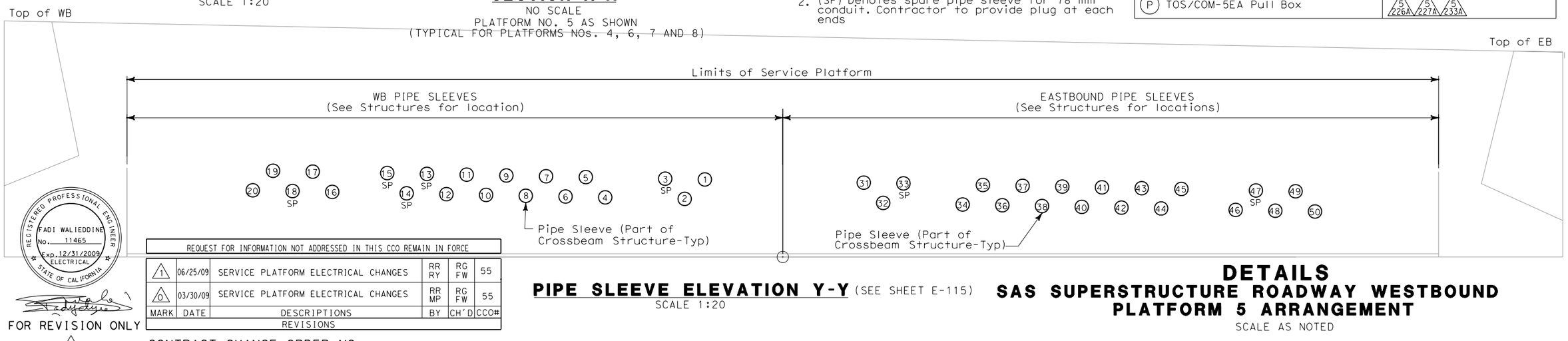

PIPE SLEEVE ELEVATION Y-Y (SEE SHEET E-115)
SCALE 1:20

REQUEST FOR INFORMATION NOT ADDRESSED IN THIS CCO REMAIN IN FORCE					
1	06/25/09	SERVICE PLATFORM ELECTRICAL CHANGES	RR RY	RG FW	55
0	03/30/09	SERVICE PLATFORM ELECTRICAL CHANGES	RR MP	RG FW	55
MARK	DATE	DESCRIPTIONS REVISIONS	BY	CH'D	CCO#

FOR REVISION ONLY
1

CONTRACT CHANGE ORDER NO._____
SHEET_____ OF_____
THIS PLAN IS ACCURATE FOR ELECTRICAL WORK ONLY.

DETAILS
SAS SUPERSTRUCTURE ROADWAY WESTBOUND PLATFORM 5 ARRANGEMENT
SCALE AS NOTED

E-72A

DIST	COUNTY	ROUTE	KILOMETER POST TOTAL PROJECT	SHEET No	TOTAL SHEETS
04	SF	80	13.2/13.9	135 S1R1	1204

REGISTERED ELECTRICAL ENGINEER — DATE 6/12/08

PLANS APPROVAL DATE

REGISTERED PROFESSIONAL ENGINEER — FADI WALIEDDINE No. 11465 Exp. 12/31/2009 ELECTRICAL — STATE OF CALIFORNIA

PB AMERICAS, Inc.
A Parsons Brinckerhoff Company
303 Second St., Suite 700N
San Francisco, CA 94107-1317

The State of California or its officers or agents shall not be responsible for the accuracy or completeness of electronic copies of this plan sheet.

Caltrans now has a web site! To get to the web site, go to http://www.dot.ca.gov

DESIGN OVERSIGHT — BEHZAD GOLEMOHAMMADI
CALCULATED/DESIGNED BY — CHECKED BY
DATE — REVISED BY — DATE REVISED
STATE OF CALIFORNIA - DEPARTMENT OF TRANSPORTATION — Caltrans

REGISTERED PROFESSIONAL ENGINEER — FADI WALIEDDINE No. 11465 Exp. 12/31/2009 ELECTRICAL — STATE OF CALIFORNIA

LAST REVISION 00-00-00
DATE PLOTTED => 6/25/2009
TIME PLOTTED => 3:22:22 PM

FOR REDUCED PLANS ORIGINAL SCALE IS IN MILLIMETERS 0 20 40 60 80

ALL DIMENSIONS ARE IN MILLIMETERS UNLESS OTHERWISE SHOWN.

DGN FILE =>T:\13103\MS\pse\SAS Struc\CCO\SAS CCO55\2009-05-25_Issued for Submittal\04-0120f1_0135S01R01.dgn
USERNAME =>garciar
CU 04251
EA 0120F1

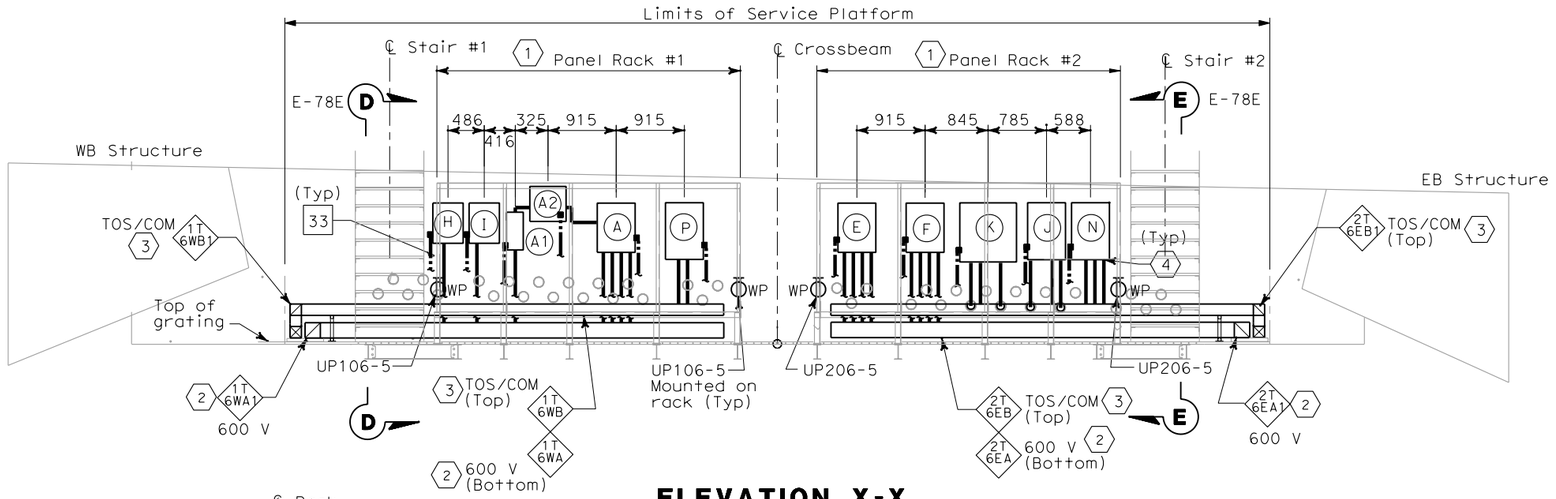

ELEVATION X-X
SCALE 1:40

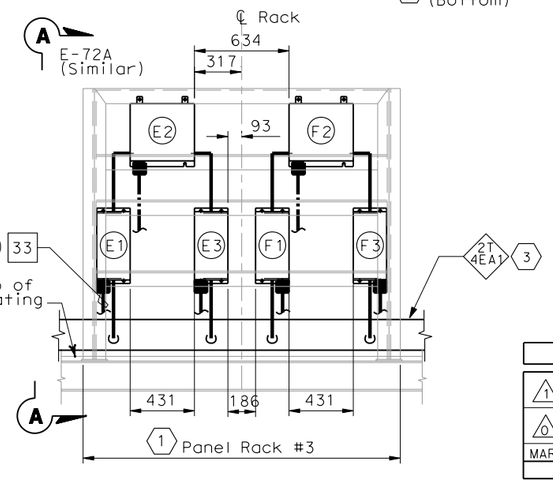

ELEVATION Z-Z
SCALE 1:20

FOR REVISION ONLY

1

REQUEST FOR INFORMATION NOT ADDRESSED IN THIS CCO REMAIN IN FORCE					
1	06/25/09	SERVICE PLATFORM ELECTRICAL CHANGES	RR RY	RG FW	55
0	03/30/09	SERVICE PLATFORM ELECTRICAL CHANGES	RR MP	RG FW	55
MARK	DATE	DESCRIPTIONS REVISIONS	BY	CH'D	CCO#

CONTRACT CHANGE ORDER NO._____
SHEET_____ OF_____

SHEET NOTES:

1. For electrical panel support details, see AS-sheets, AS-13, AS-13A and AS-13B.
2. 600 V Stainless Steel Wireway, Nema 4X with cover.
3. Low level Stainless Steel Wireway, Nema 4X with cover.
4. Empty conduits shall be capped for future use.

NOTES:

1. Equipment dimensions mounted at panel racks shall be verified by Contractor prior to purchase and installation. Dimensions for equipment location are approximate and may be adjusted to suit field condition.
2. (SP) Denotes spare pipe sleeve for 78 mm conduit. Contractor to provide plug at each ends

WESTBOUND	CONDUIT NUMBERS
(A) Utility Panel, UP-106	4 2430 4 244A 4 036 4 037
(A1) Main Breaker for (A2)	4 243A 4 243B
(A2) 15 kVA Transformer	4 243B 4 243C
(P) TOS/COM-6WA Pull Box	4 245A 4 246A
(I) Navigation Relay Cabinet NAP-6W	4 040

EASTBOUND	CONDUIT NUMBERS
(E) Utility Panel, UP-206	5 2430 5 244A 5 051 5 053
(E1) Main Breaker for (E2)	5 243A 5 243B
(E2) 15 kVA Transformer	5 243B 5 243C
(E3) Feeder Breaker for (E)	5 243C 5 243E
(F) Lighting Panel LP-221	5 241D 5 054 5 055 5 056
(F1) Main Breaker for (F2)	5 241A 5 241B
(F2) 15 kVA Transformer	5 241B 5 241C
(F3) Feeder Breaker for (F)	5 241C 5 241E
(J) Telephone Terminal Box #TEL-6	5 250 5 246A 5 238 1
(K) Communication Terminal Box #COM-6	5 246 5 238A 5 247
(N) TOS/COM-6EA Pull Box	5 247A 5 236A 5 237A
(H) Navigation Relay Cabinet NAP-6E	5 245A

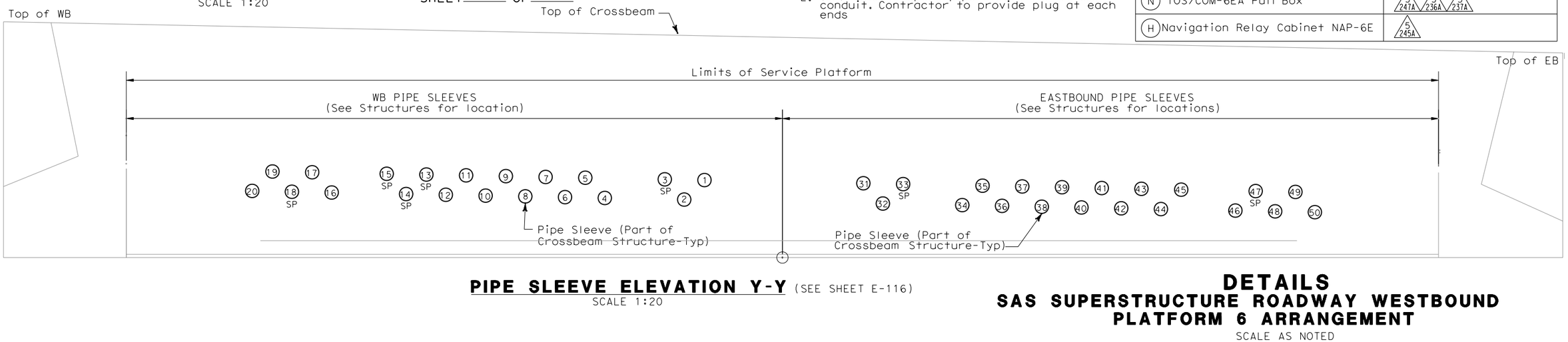

PIPE SLEEVE ELEVATION Y-Y (SEE SHEET E-116)
SCALE 1:20

DETAILS
SAS SUPERSTRUCTURE ROADWAY WESTBOUND PLATFORM 6 ARRANGEMENT
SCALE AS NOTED

E-73A

DIST	COUNTY	ROUTE	KILOMETER POST TOTAL PROJECT	SHEET No	TOTAL SHEETS
04	SF	80	13.2/13.9	136 S1R1	1204

REGISTERED ELECTRICAL ENGINEER — 6/12/08 DATE

PLANS APPROVAL DATE

REGISTERED PROFESSIONAL ENGINEER — FADI WALIEDDINE No. 11465 Exp. 12/31/2009 ELECTRICAL — STATE OF CALIFORNIA

PB AMERICAS, Inc.
A Parsons Brinckerhoff Company
303 Second St., Suite 700N
San Francisco, CA 94107-1317

The State of California or its officers or agents shall not be responsible for the accuracy or completeness of electronic copies of this plan sheet.

Caltrans now has a web site! To get to the web site, go to http://www.dot.ca.gov

DESIGN OVERSIGHT — BEHZAD GOLEMOHAMMADI
CALCULATED/DESIGNED BY
CHECKED BY
DATE REVISED BY
DATE REVISED

STATE OF CALIFORNIA - DEPARTMENT OF TRANSPORTATION — Caltrans

THIS PLAN IS ACCURATE FOR ELECTRICAL WORK ONLY.

ALL DIMENSIONS ARE IN MILLIMETERS UNLESS OTHERWISE SHOWN.

FOR REDUCED PLANS ORIGINAL SCALE IS IN MILLIMETERS 0 20 40 60 80

DGN FILE =>T:\13103\MS\pse\SAS Struc\CCO\SAS CCO55\2009-05-25_Issued for Submittal\04-0120f1_0136S01R01.dgn
USERNAME =>garciar

CU 04251 EA 0120F1

LAST REVISION 00-00-00
DATE PLOTTED => 6/25/2009
TIME PLOTTED => 3:22:52 PM

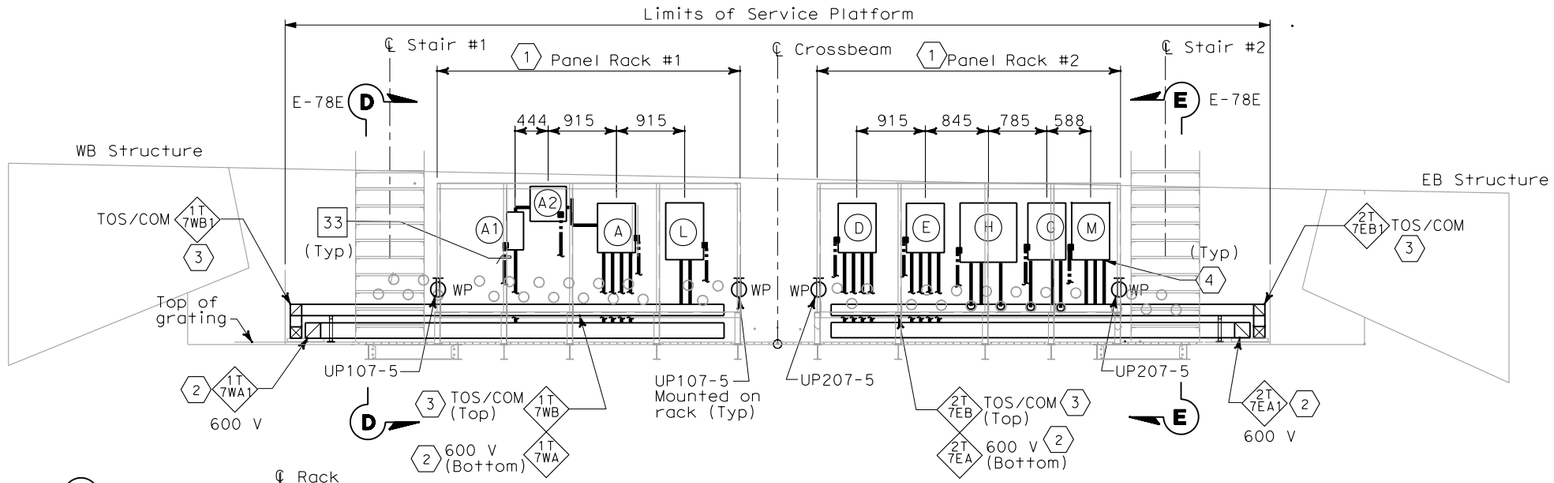

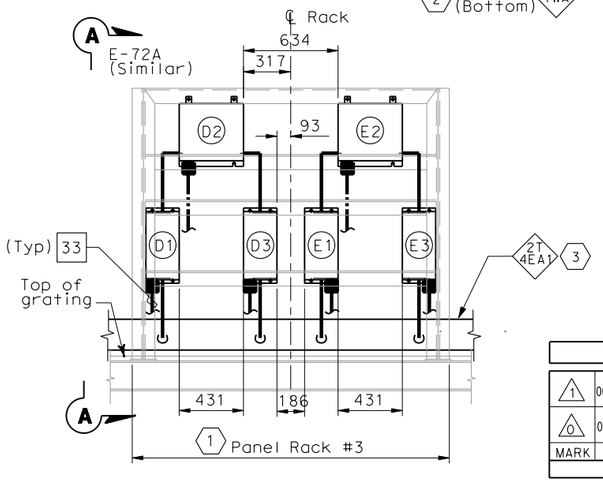

ELEVATION Z-Z
SCALE 1:20

ELEVATION X-X
SCALE 1:40

FADI WALIEDDINE No. 11465 Exp. 12/31/2009 ELECTRICAL — REGISTERED PROFESSIONAL ENGINEER — STATE OF CALIFORNIA

FOR REVISION ONLY
1

REQUEST FOR INFORMATION NOT ADDRESSED IN THIS CCO REMAIN IN FORCE					
1	06/25/09	SERVICE PLATFORM ELECTRICAL CHANGES	RR RY	RG FW	55
0	03/30/09	SERVICE PLATFORM ELECTRICAL CHANGES	RR MP	RG FW	55
MARK	DATE	DESCRIPTIONS	BY	CH'D	CCO#
REVISIONS					

CONTRACT CHANGE ORDER NO._____
SHEET_____ OF_____

SHEET NOTES:

1. For electrical panel support details, see AS-sheets, AS-13, AS-13A and AS-13B.
2. 600 V Stainless Steel Wireway, Nema 4X with cover.
3. Low level Stainless Steel Wireway, Nema 4X with cover.
4. Empty conduits shall be capped for future use.

NOTES:

1. Equipment dimensions mounted at panel racks shall be verified by Contractor prior to purchase and installation. Dimensions for equipment location are approximate and may be adjusted to suit field condition.
2. (SP) Denotes spare pipe sleeve for 78 mm conduit. Contractor to provide plug at each ends

DIST	COUNTY	ROUTE	KILOMETER POST TOTAL PROJECT	SHEET No	TOTAL SHEETS
04	SF	80	13.2/13.9	137 STR1	1204

Caltrans Metric

6/12/08
REGISTERED ELECTRICAL ENGINEER — DATE

FADI WALIEDDINE No. 11465 Exp. 12/31/2009 ELECTRICAL — REGISTERED PROFESSIONAL ENGINEER — STATE OF CALIFORNIA

PLANS APPROVAL DATE

PB AMERICAS, Inc.
A Parsons Brinckerhoff Company
303 Second St., Suite 700N
San Francisco, CA 94107-1317

The State of California or its officers or agents shall not be responsible for the accuracy or completeness of electronic copies of this plan sheet.

Caltrans now has a web site! To get to the web site, go to http://www.dot.ca.gov

WESTBOUND — CONDUIT NUMBERS

A	Utility Panel, UP-107	4 263D, 4 264A, 4 076, 4 077
A1	Main Breaker for A2	4 263A, 4 263B
A2	15 kVA Transformer	4 263B, 4 263C
L	TOS/COM-7WA Pull Box	4 265A, 4 266A

EASTBOUND — CONDUIT NUMBERS

D	Utility Panel, UP-207	5 263D, 5 264A, 5 076, 5 077
D1	Main Breaker for D2	5 263A, 5 263B
D2	15 kVA Transformer	5 263B, 5 263C
D3	Feeder Breaker for D	5 263C, 5 263E
E	Lighting Panel LP-222	5 265D, 5 079, 5 080, 5 081
E1	Main Breaker for E2	5 265A, 5 265B
E2	15 kVA Transformer	5 265B, 5 265C
E3	Feeder Breaker for E	5 265C, 5 265E
G	Telephone Terminal Box #TEL-7	5 270, 5 271A, 5 272 (1)
H	Communication Terminal Box #COM-7	5 267, 5 270A, 5 271
M	TOS/COM-7EA Pull Box	5 272A, 5 266A, 5 273A

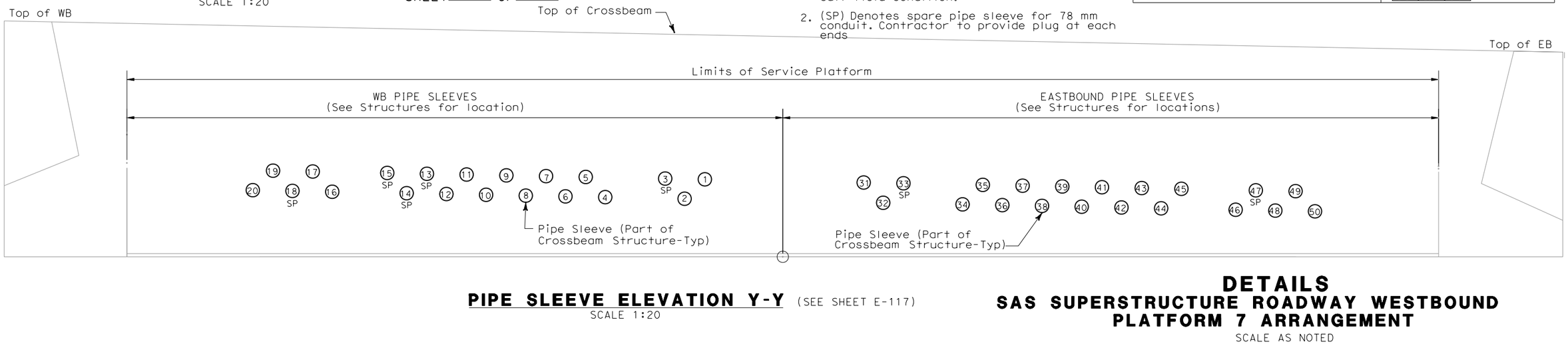

PIPE SLEEVE ELEVATION Y-Y (SEE SHEET E-117)
SCALE 1:20

DETAILS
SAS SUPERSTRUCTURE ROADWAY WESTBOUND PLATFORM 7 ARRANGEMENT
SCALE AS NOTED

E-74A

DESIGN OVERSIGHT — BEHZAD GOLEMOHAMMADI
CALCULATED/DESIGNED BY — CHECKED BY
DATE — REVISED BY — DATE REVISED
STATE OF CALIFORNIA - DEPARTMENT OF TRANSPORTATION — Caltrans

LAST REVISION 00-00-00 — DATE PLOTTED => 6/25/2009 — TIME PLOTTED => 3:23:41 PM

THIS PLAN IS ACCURATE FOR ELECTRICAL WORK ONLY.

ALL DIMENSIONS ARE IN MILLIMETERS UNLESS OTHERWISE SHOWN.

FOR REDUCED PLANS ORIGINAL SCALE IS IN MILLIMETERS 0 20 40 60 80

DGN FILE =>T:\13103\MS\pse\SAS Struc\CCO\SAS CC055\2009-05-25_Issued for Submittal\04-0120f1_0137S01R01.dgn
USERNAME =>garciar

CU 04251 — EA 0120F1

DIST	COUNTY	ROUTE	KILOMETER POST TOTAL PROJECT	SHEET No	TOTAL SHEETS
04	SF	80	13.2/13.9	166 R2	1204

REGISTERED ELECTRICAL ENGINEER — 12/19/02

12-6-04
PLANS APPROVAL DATE

REGISTERED PROFESSIONAL ENGINEER — JENS ERLINGSSON No. 8249 Exp. 9/30/06 ELECTRICAL — STATE OF CALIFORNIA

PB POWER, Inc.
A Parsons Brinckerhoff Company
303 Second St., Suite 700N
San Francisco, CA 94107-1317

The State of California or its officers or agents shall not be responsible for the accuracy or completeness of electronic copies of this plan sheet.

Caltrans now has a web site! To get to the web site, go to http://www.dot.ca.gov

Caltrans Metric

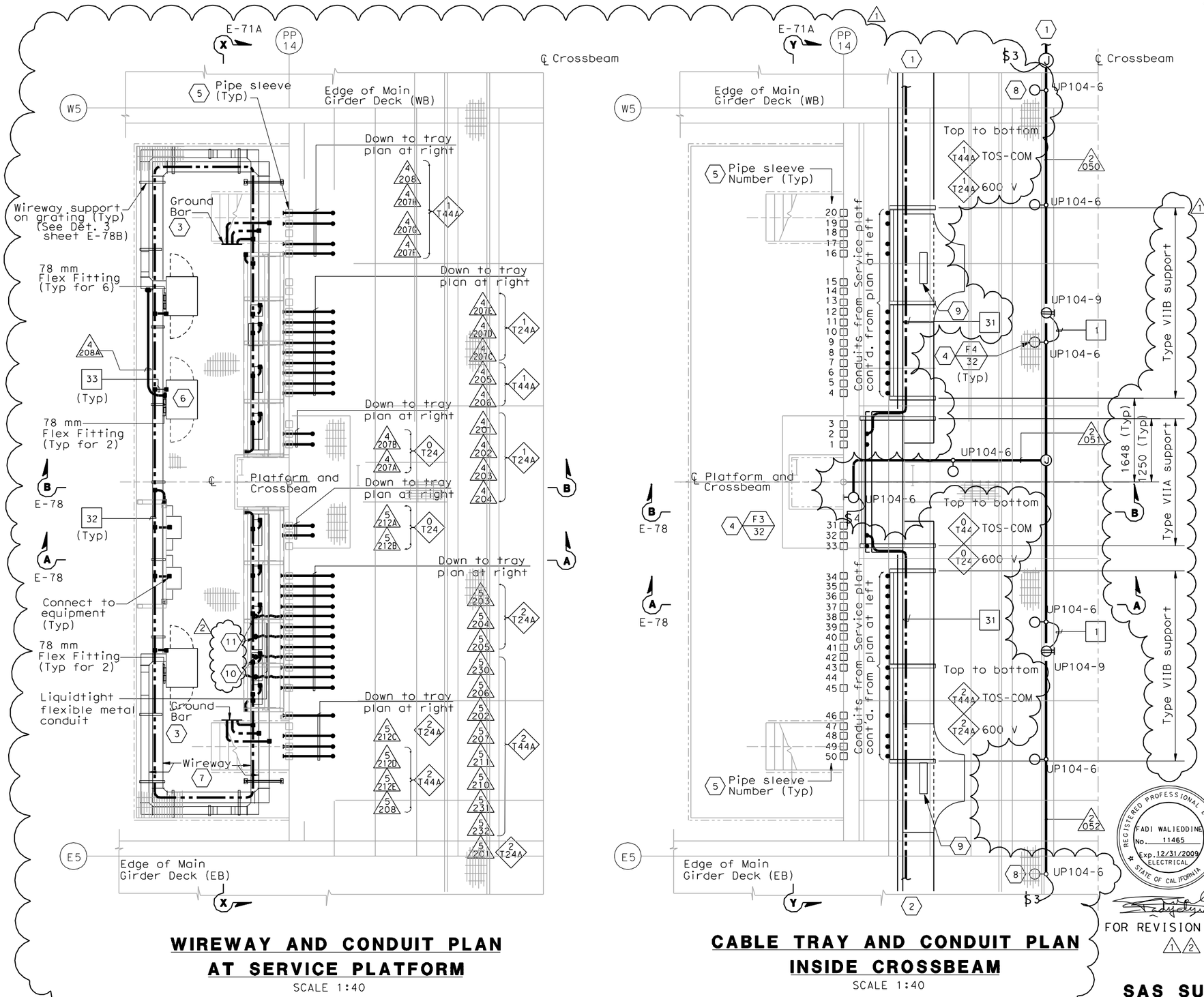

WIREWAY AND CONDUIT PLAN AT SERVICE PLATFORM

SCALE 1:40

CABLE TRAY AND CONDUIT PLAN INSIDE CROSSBEAM

SCALE 1:40

SHEET NOTES:

1. For continuation inside WB girder, see sheets E-96 and E-114A.
2. For continuation inside EB girder, see sheet E-181 and E-114A.
3. For typical ground bar installation, see Detail 5 sheet E-78.
4. For typical lighting fixture installation see Details 2 and 3, sheet E-123.
5. Pipe sleeve without conduit going through is spare. Contractor to provide plug or cap at both ends. For location see Section Y-Y on sheet E-71A.
6. TOS-4WB for the temporary mobile CMS. Control cabinet shall remain for future use. U.O.N.
7. For wireway numbers, see sheet E-71.
8. Locate light fixture approximate half way between girder wall and girder walkway.
9. Fiber splice tray, see sheet E-355.
10. Terminate conduits at Terminal Box #TEL-4.
11. Terminate conduits at Terminal Box #COM-4.

NOTES:

1. Reference:
   - For circuit, conduit/cable tray schedules, see sheets starting at E-401.
2. For wireway support details, see AS sheets.
3. For location of pipe sleeves at the utility platform crossbeams, see Typical Crossbeam Details sheets.
4. For platform elevations, see sheet E-71A.

REGISTERED PROFESSIONAL ENGINEER — FADI WALIEDDINE No. 11465 Exp. 12/31/2009 ELECTRICAL — STATE OF CALIFORNIA

FOR REVISION ONLY
1 2

REQUEST FOR INFORMATION NOT ADDRESSED IN THIS CCO REMAIN IN FORCE

MARK	DATE	DESCRIPTIONS	BY	CH'D	CCO#
REVISIONS					
2	06/25/09	SERVICE PLATFORM ELECTRICAL CHANGES	RR RY	RG FW	55
1	03/30/09	SERVICE PLATFORM ELECTRICAL CHANGES	RR MP	RG FW	55

CONTRACT CHANGE ORDER NO._____
SHEET_____ OF_____

DETAILS
SAS SUPERSTRUCTURE GIRDER WESTBOUND PLATFORM 4 CONDUIT, LIGHTING AND GROUNDING PLAN

SCALE AS NOTED

E-114

CALCULATED/ DESIGNED	BY	FK	DATE 11/02	REVISED
CHECKED	BY	IAH	11/02	DATE REVISED

DESIGN OVERSIGHT — BEHZAD GOLEMOHAMMADI

STATE OF CALIFORNIA - DEPARTMENT OF TRANSPORTATION — Caltrans

THIS PLAN IS ACCURATE FOR ELECTRICAL WORK ONLY.

ALL DIMENSIONS ARE IN MILLIMETERS UNLESS OTHERWISE SHOWN.

FOR REDUCED PLANS ORIGINAL SCALE IS IN MILLIMETERS 0 20 40 60 80

DGN FILE = X:\13103\MS\pse\SAS Struc\CCO\SAS CCO55\2009-05-25_Issued for Submittal\04-0120f1_0166R02.dgn
USERNAME = florico

CU 04251 EA 0120F1

LAST REVISION DATE PLOTTED = 6/25/2009
TIME PLOTTED = 13:21:36 PM
00-00-00

DIST	COUNTY	ROUTE	KILOMETER POST TOTAL PROJECT	SHEET No	TOTAL SHEETS
04	SF	80	13.2/13.9	167 R2	1204

Caltrans Metric

REGISTERED ELECTRICAL ENGINEER 12/19/02 DATE

12-6-04
PLANS APPROVAL DATE

REGISTERED PROFESSIONAL ENGINEER JENS ERLINGSSON No. 8249 Exp. 9/30/06 ELECTRICAL STATE OF CALIFORNIA

PB POWER, Inc.
A Parsons Brinckerhoff Company
303 Second St., Suite 700N
San Francisco, CA 94107-1317

The State of California or its officers or agents shall not be responsible for the accuracy or completeness of electronic copies of this plan sheet.

Caltrans now has a web site! To get to the web site, go to http://www.dot.ca.gov

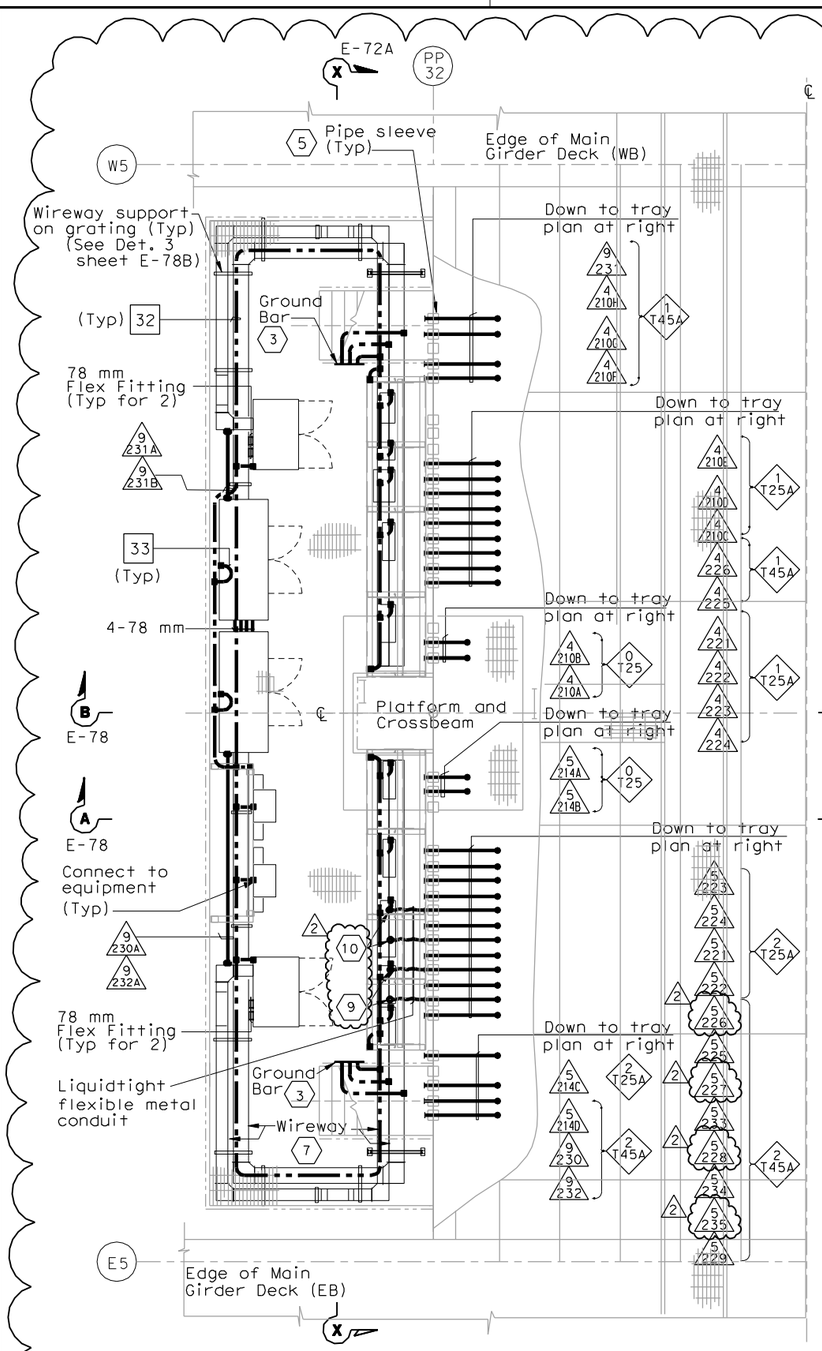

WIREWAY AND CONDUIT PLAN AT SERVICE PLATFORM

SCALE 1:40

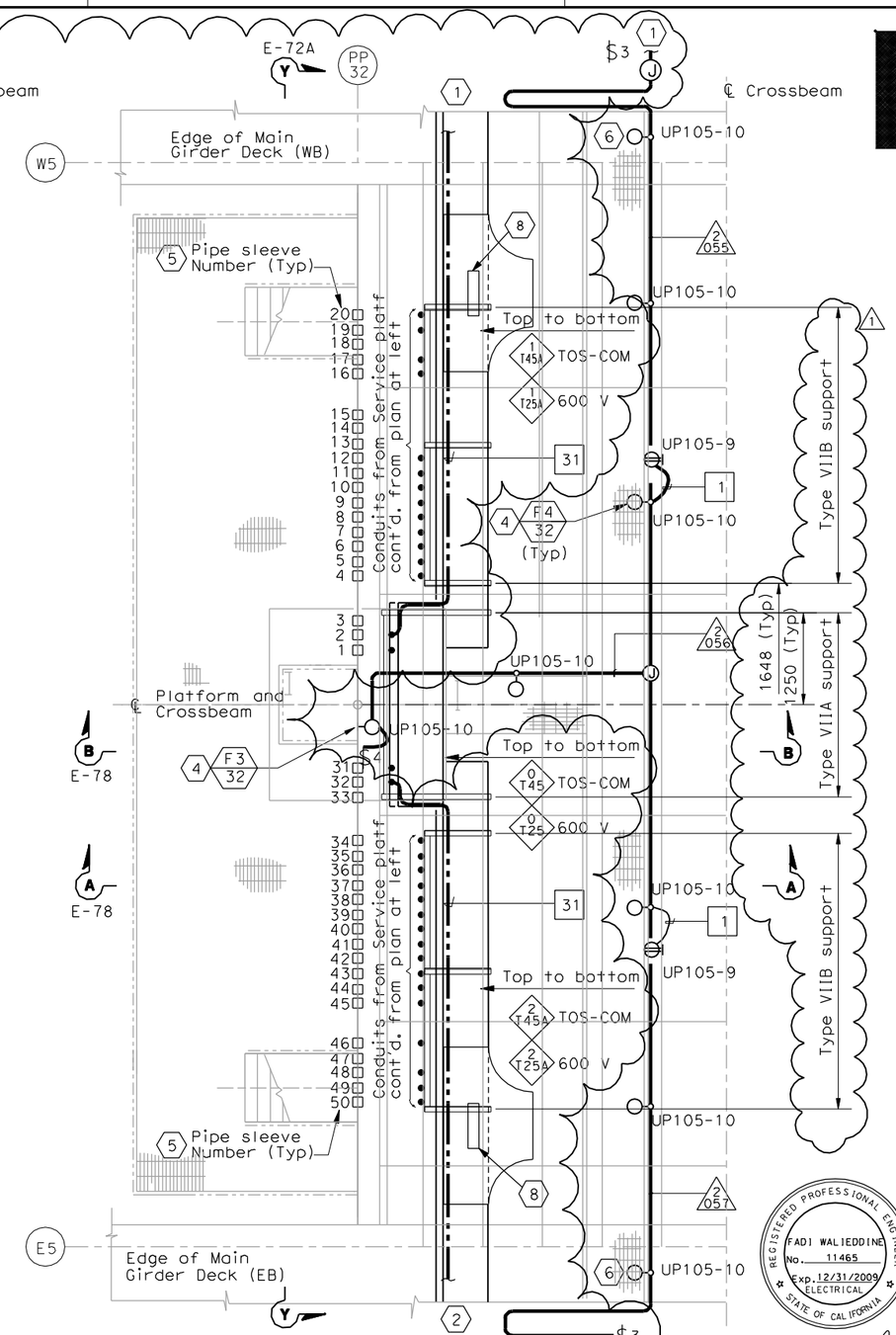

CABLE TRAY AND CONDUIT PLAN INSIDE CROSSBEAM

SCALE 1:40

SHEET NOTES:

1. For continuation inside WB girder, see sheets E-97 and E-114B.
2. For continuation inside EB girder, see sheet E-182 and E-114B.
3. For typical ground bar installation, see Detail 5 sheet E-78.
4. For typical lighting fixture installation see Details 2 and 3, sheet E-123.
5. Pipe sleeve without conduit going through is spare. Contractor to provide plug or cap at both ends. For location see Section Y-Y on sheet E-72A.
6. Locate light fixture approximate half way between girder wall and girder walkway.
7. For wireway numbers, see sheet E-72.
8. Fiber Optic splice closure, see Typical Fiber Optic Tray Detail Sheet E-355.
9. Terminate conduits at Terminal Box #TEL-5.
10. Terminate conduits at Terminal Box #COM-5.

NOTES:

1. Reference:
   - For circuit, conduit/cable tray schedules, see sheets starting at E-401.
2. For wireway support details, see AS sheets.
3. For location of pipe sleeves at the utility platform crossbeams, see Typical Crossbeam Details sheets.
4. For platform elevations, see sheet E-72A.

REGISTERED PROFESSIONAL ENGINEER FADI WALIEDDINE No. 11465 Exp. 12/31/2009 ELECTRICAL STATE OF CALIFORNIA

FOR REVISION ONLY

REQUEST FOR INFORMATION NOT ADDRESSED IN THIS CCO REMAIN IN FORCE

MARK	DATE	DESCRIPTIONS	BY	CH'D	CCO#
2	06/25/09	SERVICE PLATFORM ELECTRICAL CHANGES	RR RY	RG FW	55
1	03/30/09	SERVICE PLATFORM ELECTRICAL CHANGES	RR MP	RG FW	55

REVISIONS

CONTRACT CHANGE ORDER NO._____
SHEET_____ OF_____

DETAILS

SAS SUPERSTRUCTURE GIRDER WESTBOUND PLATFORM 5 CONDUIT, LIGHTING, AND GROUNDING PLAN

SCALE AS NOTED

E-115

STATE OF CALIFORNIA - DEPARTMENT OF TRANSPORTATION
Caltrans

DESIGN OVERSIGHT: BEHZAD GOLEMOHAMMADI
CALCULATED/DESIGNED BY: JP DATE 7/01 REVISED BY
CHECKED BY: BL 12/01 DATE REVISED

THIS PLAN IS ACCURATE FOR ELECTRICAL WORK ONLY.

ALL DIMENSIONS ARE IN MILLIMETERS UNLESS OTHERWISE SHOWN.

FOR REDUCED PLANS ORIGINAL SCALE IS IN MILLIMETERS 0 20 40 60 80

DGN FILE =>T:\13103\MS\pse\SAS Struc\CCO\SAS CC055\2009-05-25_Issued for Submittal\04-0120f1_0167R02.dgn
USERNAME =>llorico
CU 04251 EA 0120F1

LAST REVISION 00-00-00
DATE PLOTTED => 6/25/2009
TIME PLOTTED => 3:21:23 PM

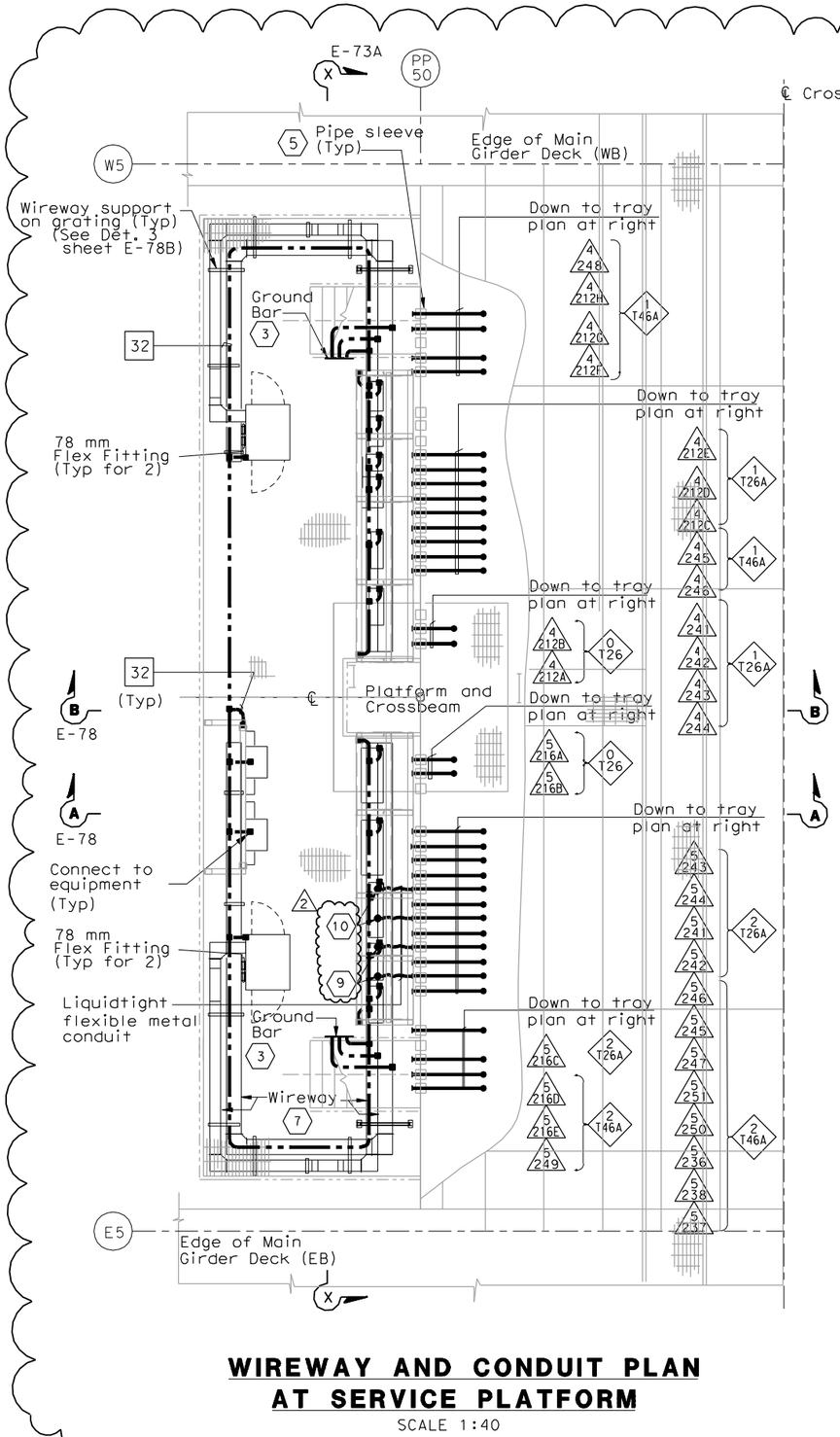

WIREWAY AND CONDUIT PLAN AT SERVICE PLATFORM

SCALE 1:40

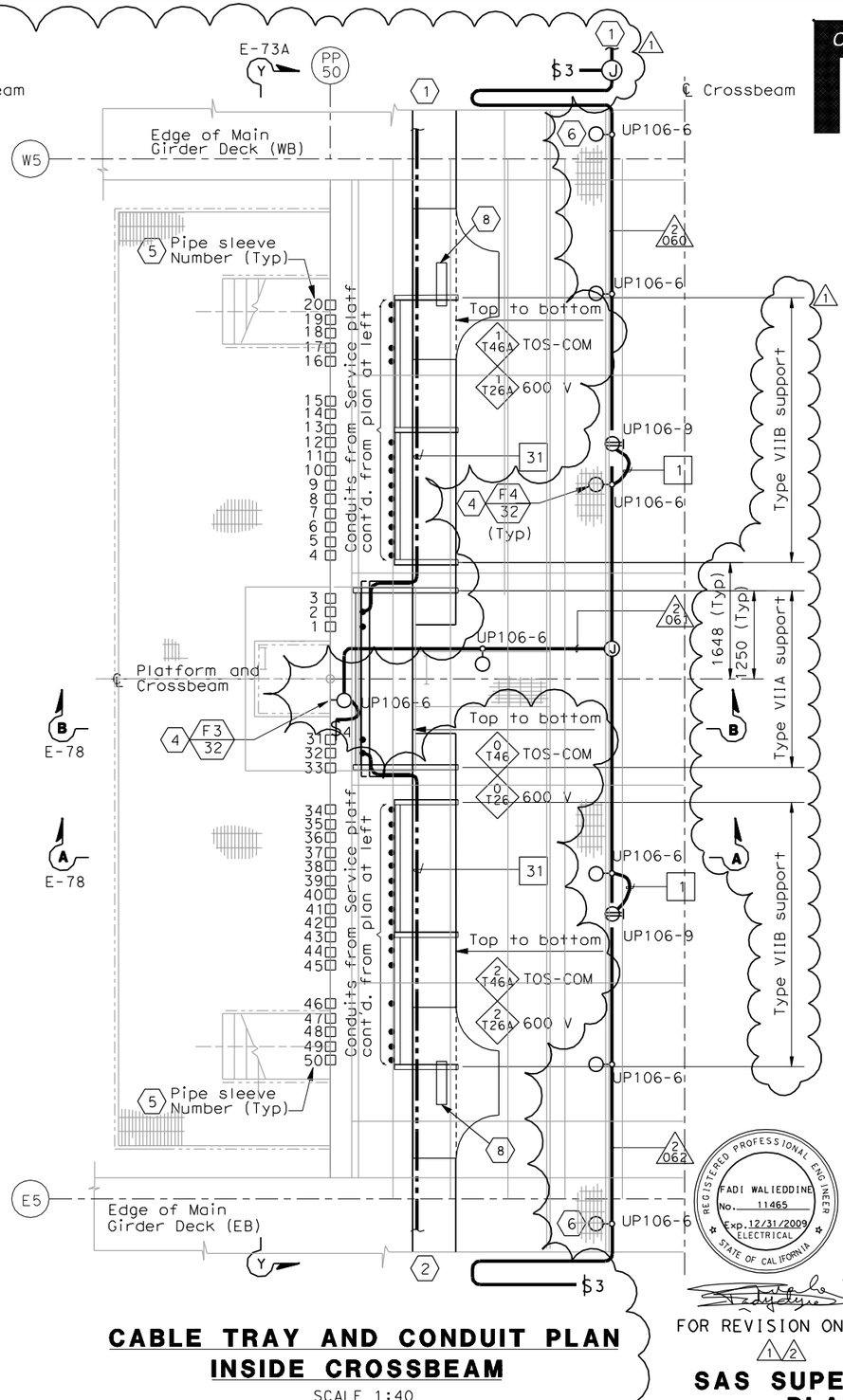

CABLE TRAY AND CONDUIT PLAN INSIDE CROSSBEAM

SCALE 1:40

Caltrans Metric

DIST	COUNTY	ROUTE	KILOMETER POST TOTAL PROJECT	SHEET No	TOTAL SHEETS
04	SF	80	13.2/13.9	168 R2	1204

12/19/02
REGISTERED ELECTRICAL ENGINEER DATE

REGISTERED PROFESSIONAL ENGINEER — JENS ERLINGSSON No. 8249 Exp. 9/30/06 ELECTRICAL — STATE OF CALIFORNIA

12-6-04
PLANS APPROVAL DATE

PB POWER, Inc.
A Parsons Brinckerhoff Company
303 Second St., Suite 700N
San Francisco, CA 94107-1317

The State of California or its officers or agents shall not be responsible for the accuracy or completeness of electronic copies of this plan sheet.

Caltrans now has a web site! To get to the web site, go to http://www.dot.ca.gov

SHEET NOTES:

1. For continuation inside WB girder, see sheets E-98 and E-114B.
2. For continuation inside EB girder, see sheet E-183 and E-114B.
3. For typical ground bar installation, see Detail 5 sheet E-78.
4. For typical lighting fixture installation see Details 2 and 3, sheet E-123.
5. Pipe sleeve without conduit going through is spare. Contractor to provide plug or cap at both ends. For location see Section Y-Y on sheet E-73A.
6. Locate light fixture approximate half way between girder wall and girder walkway.
7. For wireway numbers, see sheet E-73.
8. Fiber Optic splice closure, see Typical Fiber Optic Tray Detail Sheet E-355.
9. Terminate conduits at Terminal Box #TEL-6.
10. Terminate conduits at Terminal Box #COM-6.

NOTES:

1. Reference:
   - For circuit, conduit/cable tray schedules, see sheets starting at E-401.
2. For wireway support details, see AS sheets.
3. For location of pipe sleeves at the utility platform crossbeams, see Typical Crossbeam Details sheets.
4. For platform elevations, see sheet E-73A.

REGISTERED PROFESSIONAL ENGINEER — FADI WALIEDDINE No. 11465 Exp. 12/31/2009 ELECTRICAL — STATE OF CALIFORNIA

REQUEST FOR INFORMATION NOT ADDRESSED IN THIS CCO REMAIN IN FORCE

MARK	DATE	DESCRIPTIONS	BY	CH'D	CCO#
		REVISIONS			
2	06/25/09	SERVICE PLATFORM ELECTRICAL CHANGES	RR RY	RG FW	55
1	03/30/09	SERVICE PLATFORM ELECTRICAL CHANGES	RR MP	RG FW	55

FOR REVISION ONLY 1 2

CONTRACT CHANGE ORDER NO._____
SHEET_____ OF_____

DETAILS
SAS SUPERSTRUCTURE GIRDER WESTBOUND PLATFORM 6 CONDUIT, LIGHTING, AND GROUNDING PLAN

SCALE AS NOTED

E-116

CALCULATED/ DESIGNED BY	DATE	REVISED BY
JP	08/01	
CHECKED BY	DATE	REVISED
BL	11/01	

DESIGN OVERSIGHT — BEHZAD GOLEMOHAMMADI

STATE OF CALIFORNIA - DEPARTMENT OF TRANSPORTATION — Caltrans

THIS PLAN IS ACCURATE FOR ELECTRICAL WORK ONLY.

ALL DIMENSIONS ARE IN MILLIMETERS UNLESS OTHERWISE SHOWN.

FOR REDUCED PLANS ORIGINAL SCALE IS IN MILLIMETERS 0 20 40 60 80

DGN FILE =>T:\13103\MS\pse\SAS Struc\CCO\SAS CC055\2009-05-25_Issued for Submittal\04-0120f1_D168R02.dgn
USERNAME =>llorico

CU 04251 EA 0120F1

LAST REVISION 00-00-00
DATE PLOTTED => 6/25/2009
TIME PLOTTED => 3:21:12 PM

DIST	COUNTY	ROUTE	KILOMETER POST TOTAL PROJECT	SHEET No	TOTAL SHEETS
04	SF	80	13.2/13.9	169 R2	1204

REGISTERED ELECTRICAL ENGINEER — 12/19/02 DATE

12-6-04
PLANS APPROVAL DATE

REGISTERED PROFESSIONAL ENGINEER — JENS ERLINGSSON No. 8249 Exp. 9/30/06 ELECTRICAL — STATE OF CALIFORNIA

PB POWER, Inc.
A Parsons Brinckerhoff Company
303 Second St., Suite 700N
San Francisco, CA 94107-1317

The State of California or its officers or agents shall not be responsible for the accuracy or completeness of electronic copies of this plan sheet.

Caltrans now has a web site! To get to the web site, go to http://www.dot.ca.gov

CALCULATED/ DESIGNED BY | CHECKED BY | REVISED

DESIGN OVERSIGHT — BEHZAD GOLEMOHAMMADI

STATE OF CALIFORNIA - DEPARTMENT OF TRANSPORTATION — Caltrans

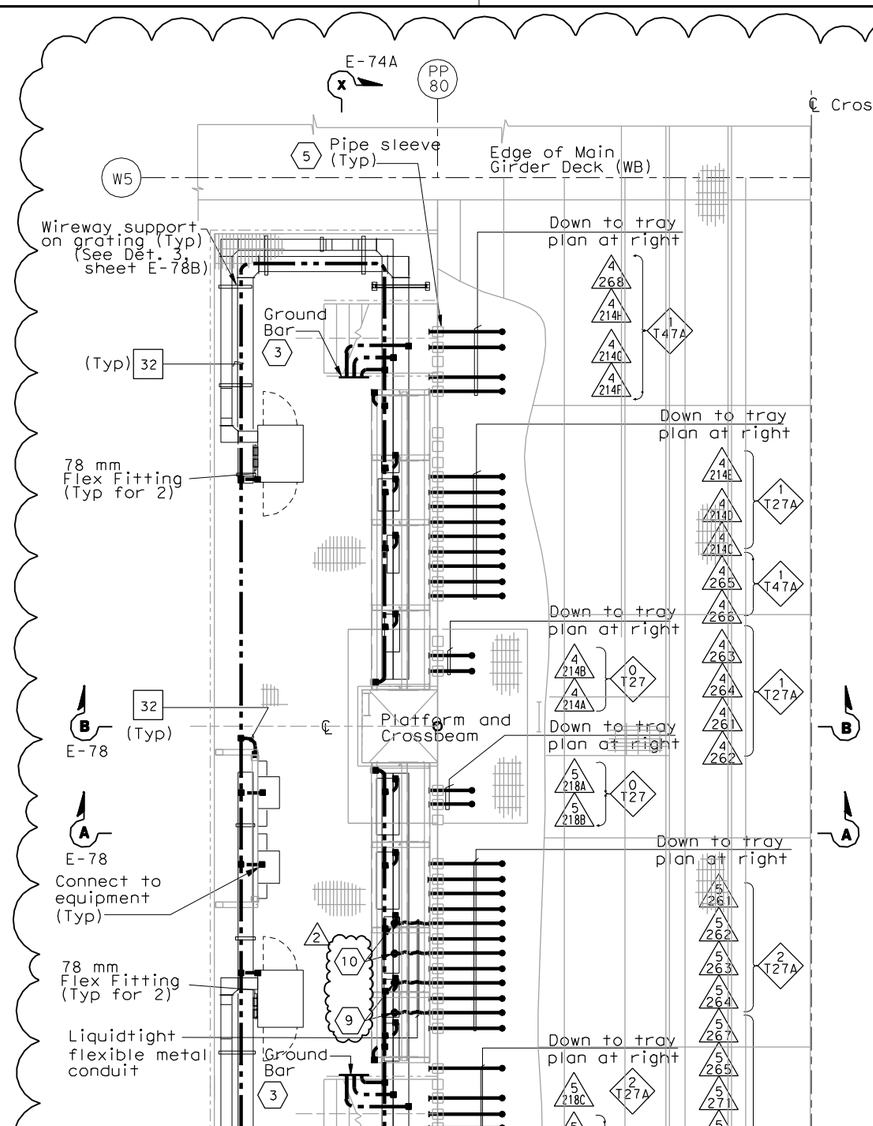

WIREWAY AND CONDUIT PLAN AT SERVICE PLATFORM

SCALE 1:40

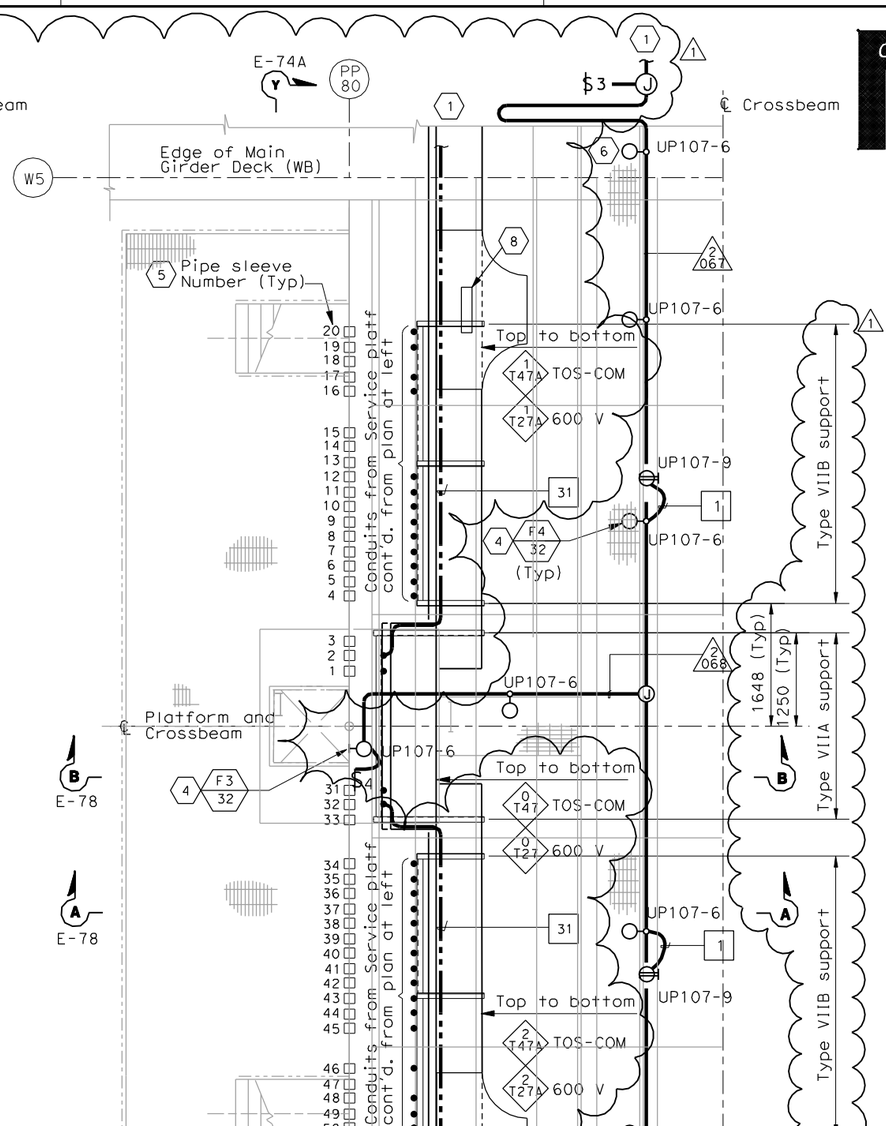

CABLE TRAY AND CONDUIT PLAN INSIDE CROSSBEAM

SCALE 1:40

SHEET NOTES:

1. For continuation inside WB girder, see sheets E-99 and E-114B.
2. For continuation inside EB girder, see sheet E-184 and E-114B.
3. For typical ground bar installation, see Detail 5 sheet E-78.
4. For typical lighting fixture installation see Details 2 and 3, sheet E-123.
5. Pipe sleeve without conduit going through is spare. Contractor to provide plug or cap at both ends. For location see Section Y-Y on sheet E-74A.
6. Locate light fixture approximate half way between girder wall and girder walkway.
7. For wireway numbers, see sheet E-74.
8. Fiber Optic splice closure, see Typical Fiber Optic Tray Detail Sheet E-355.
9. Terminate conduits at Terminal Box #TEL-7.
10. Terminate conduits at Terminal Box #COM-7.

NOTES:

1. Reference:
   - For circuit, conduit/cable tray schedules, see sheets starting at E-401.
2. For wireway support details, see AS sheets.
3. For location of pipe sleeves at the utility platform crossbeams, see Typical Crossbeam Details sheets.
4. For platform elevations, see sheet E-74A.

REGISTERED PROFESSIONAL ENGINEER — FADI WALIEDDINE No. 11465 Exp.12/31/2009 ELECTRICAL — STATE OF CALIFORNIA

FOR REVISION ONLY 1 2

REQUEST FOR INFORMATION NOT ADDRESSED IN THIS CCO REMAIN IN FORCE

MARK	DATE	DESCRIPTIONS (REVISIONS)	BY	CH'D	CCO#
2	06/25/09	SERVICE PLATFORM ELECTRICAL CHANGES	RR RY	RG FW	55
1	03/30/09	SERVICE PLATFORM ELECTRICAL CHANGES	RR MP	RG FW	55

CONTRACT CHANGE ORDER NO._____
SHEET_____ OF_____

DETAILS
SAS SUPERSTRUCTURE GIRDER WESTBOUND PLATFORM 7 CONDUIT, LIGHTING, AND GROUNDING PLAN

SCALE AS NOTED

E-117

LAST REVISION 00-00-00 — DATE PLOTTED => 6/25/2009 — TIME PLOTTED => 3:20:45 PM

THIS PLAN IS ACCURATE FOR ELECTRICAL WORK ONLY.

ALL DIMENSIONS ARE IN MILLIMETERS UNLESS OTHERWISE SHOWN.

FOR REDUCED PLANS ORIGINAL SCALE IS IN MILLIMETERS 0 20 40 60 80

DGN FILE =>T:\13103\MS\pse\SAS Struc\CCO\SAS CC055\2009-05-25_Issued for Submittal\04-0120f1_D169R02.dgn
USERNAME =>llorico

CU 04251 | EA 0120F1

DIST	COUNTY	ROUTE	KILOMETER POST TOTAL PROJECT	SHEET No	TOTAL SHEETS
04	SF	80	13.2/13.9	170 R2	1204

Jens Erlingsson 12/19/02
REGISTERED ELECTRICAL ENGINEER DATE

12-6-04
PLANS APPROVAL DATE

REGISTERED PROFESSIONAL ENGINEER — JENS ERLINGSSON No. 8249 Exp. 9/30/06 ELECTRICAL — STATE OF CALIFORNIA

PB POWER, Inc.
A Parsons Brinckerhoff Company
303 Second St., Suite 700N
San Francisco, CA 94107-1317

The State of California or its officers or agents shall not be responsible for the accuracy or completeness of electronic copies of this plan sheet.

Caltrans now has a web site! To get to the web site, go to http://www.dot.ca.gov

Caltrans Metric

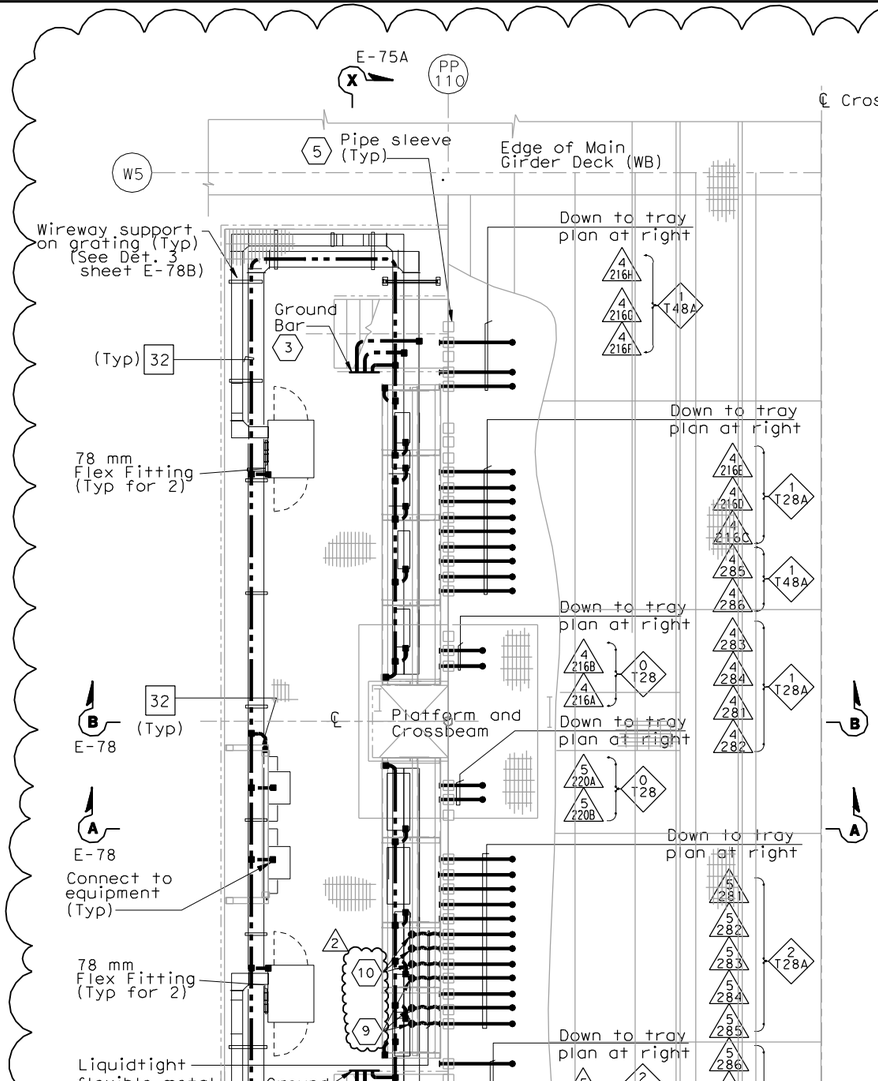

WIREWAY AND CONDUIT PLAN AT SERVICE PLATFORM

SCALE 1:40

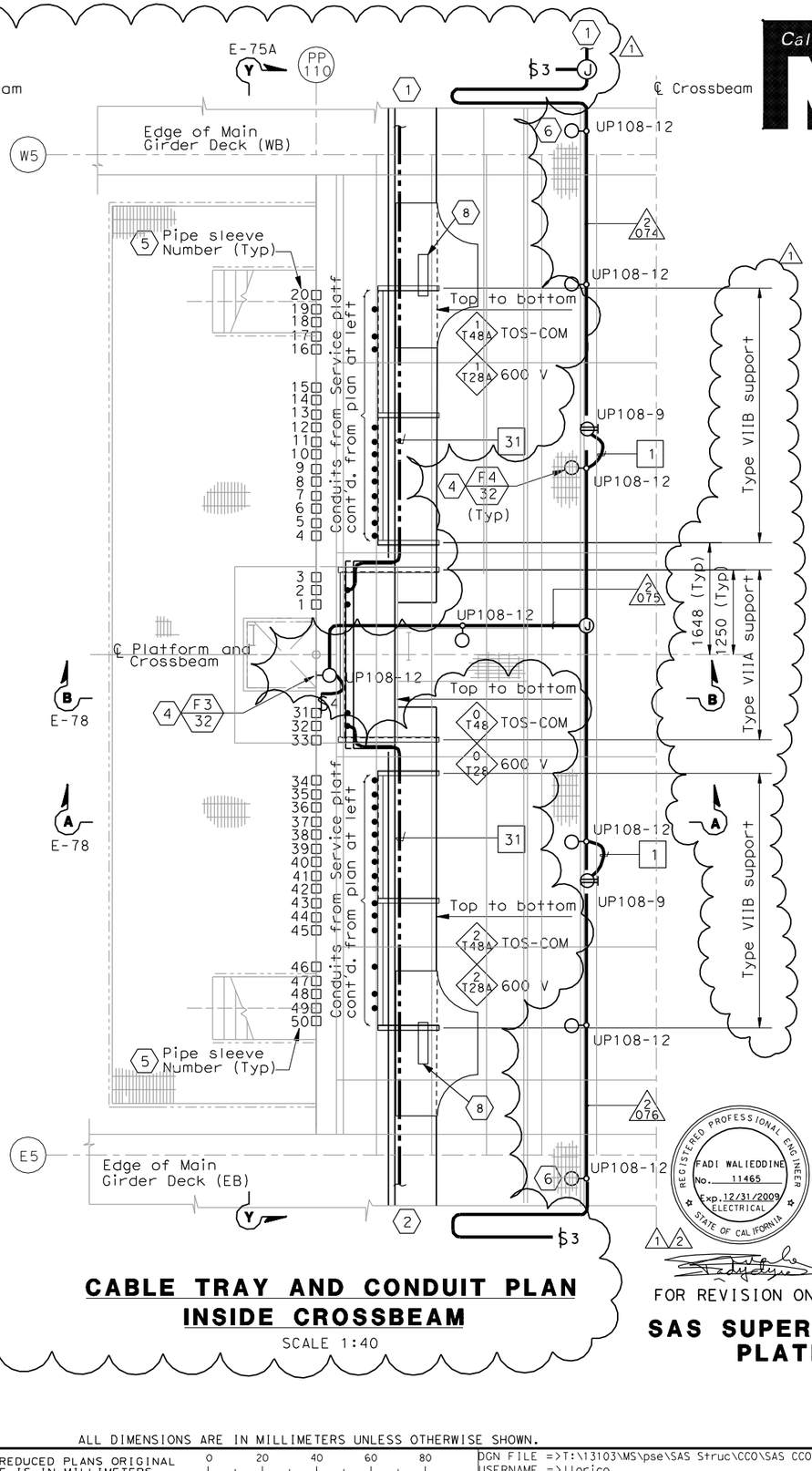

CABLE TRAY AND CONDUIT PLAN INSIDE CROSSBEAM

SCALE 1:40

SHEET NOTES:

1. For continuation inside WB girder, see sheets E-100 and E-114B.
2. For continuation inside EB girder, see sheet E-185 and E-114B.
3. For typical ground bar installation, see Detail 5 sheet E-78.
4. For typical lighting fixture installation see Details 2 and 3, sheet E-123.
5. Pipe sleeve without conduit going through is spare. Contractor to provide plug or cap at both ends. For location see Section Y-Y on sheet E-75A.
6. Locate light fixture approximate half way between girder wall and girder walkway.
7. For wireway numbers, see sheet E-75.
8. Fiber Optic splice closure, see Typical Fiber Optic Tray Detail Sheet E-355.
9. Terminate conduits at Terminal Box #TEL-8.
10. Terminate conduits at Terminal Box #COM-8.

NOTES:

1. Reference:
   - For circuit, conduit/cable tray schedules, see sheets starting at E-401.
2. For wireway support details, see AS sheets.
3. For location of pipe sleeves at the utility platform crossbeams, see Typical Crossbeam Details sheets.

REGISTERED PROFESSIONAL ENGINEER — FADI WALIEDDINE No. 11465 Exp. 12/31/2009 ELECTRICAL — STATE OF CALIFORNIA

REQUEST FOR INFORMATION NOT ADDRESSED IN THIS CCO REMAIN IN FORCE					
2	06/25/09	SERVICE PLATFORM ELECTRICAL CHANGES	RR RY	RG FW	55
1	03/30/09	SERVICE PLATFORM ELECTRICAL CHANGES	RR MP	RG FW	55
MARK	DATE	DESCRIPTIONS REVISIONS	BY	CH'D	CCO#

CONTRACT CHANGE ORDER NO._____
SHEET____ OF ____

FOR REVISION ONLY

DETAILS
SAS SUPERSTRUCTURE GIRDER WESTBOUND PLATFORM 8 CONDUIT, LIGHTING, AND GROUNDING PLAN

SCALE AS NOTED

E-118

STATE OF CALIFORNIA - DEPARTMENT OF TRANSPORTATION
Caltrans
DESIGN OVERSIGHT: BEHZAD GOLEMOHAMMADI

CALCULATED/ DESIGNED BY	JP	DATE 7/01	REVISED BY
CHECKED BY	BL	12/01	DATE REVISED

THIS PLAN IS ACCURATE FOR ELECTRICAL WORK ONLY.

ALL DIMENSIONS ARE IN MILLIMETERS UNLESS OTHERWISE SHOWN.

FOR REDUCED PLANS ORIGINAL SCALE IS IN MILLIMETERS 0 20 40 60 80

DGN FILE =>T:\13103\MS\pse\SAS Struc\CCO\SAS CC055\2009-05-25_Issued for Submittal\04-0120f1_D170R02.dgn
USERNAME =>llorico

CU 04251 EA 0120F1

LAST REVISION 00-00-00

DATE PLOTTED => 6/25/2009
TIME PLOTTED => 3:20:13 PM